DEPARTMENT OF THE NAVY
COMMANDER NAVAL AIR FORCE
U.S. PACIFIC FLEET
BOX 357051
SAN DIEGO CALIFORNIA 92135-7051

5830
Ser N00/069

5 FEB 20

FINAL ENDORSEMENT on CAPT (b) (3) (A), (b) (6) USN, ltr 5830 of 16 Apr 18

From: Commander, Naval Air Force, U.S. Pacific Fleet
To: File

Subj: COMMAND INVESTIGATION OF THE AVIATION MISHAP INVOLVING THE INBOUND FLIGHT OF A C-2 TO USS RONALD REAGAN (CVN 76) ON 22 NOVEMBER 2017

Encl: (1) LCDR (b) (3) (A), (b) (6) USN, ltr 5340 of 3 Jan 20

1. This command investigation [hereinafter "command investigation"] was convened to inquire into the facts and circumstances surrounding the incident on 22 November 2017 that resulted in the loss of three Sailors and the C-2A aircraft (BUNO 162175), call sign PASSWORD 33 (PW 33). Enclosure (1) is the supplemental investigation [hereinafter "supplemental investigation"] convened to inquire into the facts and evidence derived from the salvage of PW 33.

2. After review of both the command and supplemental investigations, I hereby approve the findings of facts, opinions, and recommendations of the investigating officers and the recommendations of Commander, Carrier Strike Group FIVE (CCSG-5) as endorsed by Commander, U.S. SEVENTH Fleet with the below modifications.

3. The following modifications are hereby made to the command investigation:

a. Opinion 12 of the command investigation stated, "The actual mechanical or material failure that caused the emergency on PW 33 is unknown at this time. Further information regarding possible causal factors in this emergency may be available from the recovery or continued examination of PW 33." Opinion 12 is hereby deleted in light of the findings and opinions of the supplemental investigation.

b. Opinion 13 of the command investigation stated, "Absent externally visible damage to the left engine, it is impossible to determine what may have caused a mechanical or material failure to that engine. The inability of the aircrew to airstart the left engine after two attempts might indicate an internal failure that warrants further investigation if PW 33 is recovered." Opinion 13 is hereby deleted in light of the findings and opinions of the supplemental investigation.

c. Recommendation 6 of the command investigation stated, "If further information becomes available through the recovery or exploration of PW 33, or from a final fuel analysis by

FOR OFFICIAL USE ONLY — PRIVACY SENSITIVE

Naval Air Systems Command (NAVAIR) that alters the findings, opinions, or recommendations of this report, recommend convening a supplemental investigation to consider the impact of that information on the findings of this report." Recommendation 6 is hereby deleted due to the convening of the supplemental investigation.

4. In addition to concurring with the recommendations of the command and supplemental investigations that no punitive or administrative action be taken against the aircrew of PW 33 or VRC-30 DET 5 maintenance personnel, I join CCSG-5 in commending the crew of PW 33 for critical thinking and fast action that enabled five passengers to survive a ditch at sea. I also join CCSG-5 in commending the U.S. and Japanese Maritime Self-Defense Force units that conducted search and rescue (SAR) efforts. Along with their families, friends, and shipmates, I mourn the loss of LT Combs, ABEAN Chialastri, and AOAA Grosso.

5. In accordance with the recommendations contained in the command and supplemental investigations, I direct the following actions:

a. Aircrew shall continue to regularly train to these types of emergencies and incorporate lessons learned from this incident into all future aircrew and passenger briefings.

b. Aviation commands shall implement a review of Life Preserver Unit (LPU) maintenance and continue to stress the importance of diligence in this area.

c. Aviation commands shall brief this mishap, lessons learned, and revisit procedures related to engine failures and emergency landings.

d. NAVAIR analysis of C-2 flooding rates shall be briefed to all C-2A aircrew.

6. I have directed my staff to forward this investigation to NAVAIR and work together to address the following recommendations:

a. Examine the feasibility of designing and implementing Supplemental Emergency Breathing Devices (SEBD) training for all passengers.

b. Investigate ways to further highlight the challenges associated with low altitude engine malfunction diagnosis and training to this difficulty, including designing future C-2A Naval Air Training and Operating Procedures Standardization (NATOPS) simulator training that replicate the conditions experienced by the aircrew of PW 33 at the time of the engine casualty.

7. I have directed my staff to forward this investigation to Chief of Naval Operations (OPNAV) and work with OPNAV to address the following recommendations:

a. Update C-2A NATOPS to direct crews experiencing potential engine failure to assess ability to maintain altitude and speed while identifying the nature and source of the casualty.

b. Recommend NAVAIR analysis of C-2 flooding rates be included in the Ditching Considerations section of the Ditching Emergency Procedure chapter of the C-2A NATOPS. The Ditching Checklist, general procedures, and characteristics should also be assessed given the information obtained through this investigation.

8. Commander, Carrier Strike Group FIVE ltr 5830 Ser N00/127 of 26 Apr 18 is hereby correctly labeled as FIRST ENDORSEMENT on CAPT (b) (3) (A), (b) (6) USN, ltr 5830 of 16 Apr 18, and numbered as pages 27 and 28. The notation of an enclosure to the aforementioned letter is hereby removed.

9. Commander, U.S. SEVENTH Fleet ltr is incorrectly titled as FIRST ENDORSEMENT on Commander, Carrier Strike Group FIVE ltr 5830 Ser N00/127 of 26 Apr 18. It is hereby correctly titled as SECOND ENDORSEMENT on CAPT (b) (3) (A), (b) (6) USN, ltr 5830 of 16 Apr 18, and numbered as page 29.

10. This investigation and enclosures will be maintained in the Force Judge Advocate office for Naval Air Forces, which may be reached at (619) 545-2778.

(b) (3) (A), (b) (6)

D. H. MILLER III

Copy to:
CTF-7
CCSG-5
CVN 76

DEPARTMENT OF THE NAVY
COMMANDER SEVENTH FLEET
UNIT 200225 BOX 1
FPO AP 96602

IN REPLY REFER TO
5830
Ser N013/026J
30 Apr 18

FIRST ENDORSEMENT on Commander, Carrier Strike Group FIVE ltr 5830 Ser N00/127 of 26 Apr 18

From: Commander, U.S. SEVENTH Fleet
To: Commander, Naval Air Forces Pacific

Subj: COMMAND INVESTIGATION OF THE AVIATION MISHAP INVOLVING THE INBOUND FLIGHT OF A C-2 TO USS RONALD REAGAN (CVN 76) ON 22 NOVEMBER 2017

1. Forwarded. I have thoroughly reviewed the subject investigation and comments provided by Commander, Carrier Strike Group FIVE. I concur with the findings of fact, opinions, and recommendations.

(b) (3) (A), (b) (6)

P. G. SAWYER

Copy to:
Commander, Carrier Strike Group FIVE

FOR OFFICIAL USE ONLY

DEPARTMENT OF THE NAVY
COMMANDER BATTLE FORCE SEVENTH FLEET
COMMANDER CARRIER STRIKE GROUP FIVE
UNIT 200218 BOX 1
FPO AP 96602

5830
Ser N00/ 127
26 Apr 18

From: Commander, Carrier Strike Group FIVE
To: Commander, Naval Air Forces Pacific
Via: Commander, U.S. SEVENTH Fleet

Subj: COMMAND INVESTIGATION OF THE AVIATION MISHAP INVOLVING THE INBOUND FLIGHT OF A C-2 TO USS RONALD REAGAN (CVN 76) ON 22 NOVEMBER 2017

Ref: (a) JAGMAN 2012, Chapter II
(b) CAPT [redacted] ltr of 16 Apr 17

Encl: (1) Command Investigation of the Incident Involving the Inbound Flight of a C-2 to USS RONALD REAGAN (CVN 76) on 22 November 2017

1. Per reference (a), I have reviewed the subject investigation into the facts and circumstances surrounding the mishap involving a C-2A aircraft from Fleet Logistics Support Squadron (VRC) 30, Detachment 5, call sign Password 33 (PW 33), which resulted in the loss of the aircraft and three Sailors inbound to USS RONALD REAGAN (CVN 76). Forwarded, concurring with the findings, opinions, and recommendations of the investigating officer and making further recommendations as outlined below.

2. It is unclear based on the evidence available at this time what engine events or other causes led to the symptoms experienced by PW 33. The Naval Air Training and Operating Procedures Standardization (NATOPS) manual for C-2A aircraft highlights the difficulty of assessing an engine casualty with excessive vibrations, underscoring the challenges faced by the crew of PW 33. While low altitude, as was the case here, and low speed at the onset of engine casualties may shorten the timeline for decision making, the ability to maintain or increase altitude and speed are also critical. Therefore, I recommend that the C-2A NATOPS manual direct crews experiencing potential engine failure to assess ability to maintain altitude and speed while identifying the nature and source of the casualty. In addition, I recommend that NAVAIR investigate ways to further highlight the challenges associated with low altitude engine malfunction diagnosis and train to this difficulty, including designing future C-2A NATOPS simulator training that replicates to the maximum extent possible the conditions experienced by the aircrew of PW 33 at the time of the engine casualty.

3. The failure of a life preserver unit (LPU) to deploy in this incident seems, anecdotally, to be consistent with the failure rate in other recent aviation mishaps. Given the life-saving role of LPUs and the potential risk to other survivors if one has an inoperable LPU, such failures should be addressed. I have directed a review of LPU maintenance across CTF-70 units and recommend a fleet-wide reminder on the importance of diligence in this area.

FOR OFFICIAL USE ONLY – PRIVACY SENSITIVE
Any misuse or unauthorized disclosure can result in both civil and criminal penalties

4. As recommended in enclosure (1), I have directed briefs to all squadrons in CTF-70 on this mishap and the lessons learned. I recommend that squadrons fleet-wide be directed to do the same, even as we await additional information and final analysis. In particular, I recommend that all dual engine aircraft squadrons brief this incident and revisit procedures related to engine failures and emergency landings.

5. In the event that the PW 33 is salvaged, additional information may come available that would change the conclusions of this report and its recommendations. In that event, it is my intention to convene a supplemental command investigation to consider any such information.

6. I strongly concur with the commendation of the crew of PW 33 for clear thinking and fast action that enabled five passengers to survive a ditch at sea. The crew removed ditching hatches, assisted egress, and maintained control of the survivors in the water, thereby improving the chances for survival under extreme circumstances. I also commend the U.S. and Japanese Maritime Self-Defense Force units that conducted search and rescue (SAR) efforts. Thanks to the SAR units' rapid response, eight Sailors were pulled from the open ocean and delivered to RONALD REAGAN in less than an hour. The speed of the SAR response demonstrates the skill and professionalism of U.S. and Japanese operators and the strength of our relationship. Moreover, for the two Sailors with significant injuries and the two without LPUs, having SAR assets on-scene within ten minutes may have been critical to rescuing these Sailors.

7. Three Sailors aboard PW 33 died on 22 November 2017 when the C-2A was lost at sea. Our thoughts are with their families and with those at Naval Air Forces Pacific and throughout the fleet who lost friends and shipmates. We strive always to learn from and better face the risks inherent to operating in a forward deployed environment and, in so doing, honor the service of LT Combs, ABEAN Chialastri, and AOAA Grosso.

8. The investigation report and enclosures will be maintained in the Staff Judge Advocate office for Carrier Strike Group FIVE.

(b) (3) (A), (b) (6)

[redacted]

M. H. DALTON

5830
16 Apr 18

From: CAPT (b) (3) (A), (b) (6), USN
To: Commander, Carrier Strike Group FIVE

Subj: COMMAND INVESTIGATION OF THE INCIDENT INVOLVING THE INBOUND FLIGHT OF A C-2 TO USS RONALD REAGAN (CVN 76) ON 22 NOVEMBER 2017

Ref: (a) JAGINST 5800.7F, JAGMAN
(b) NATOPS A1-C2AHB-NFM-000
(c) OPNAVINST 3710.7U
(d) MARFORPACO 3710.4A
(e) CNAF M-3710.7

Encl: (1) CCSG 5 ltr 5830 Ser N00/418 of 27 Nov 17
(2) CAPT (b) (3) (A), (b) (6) ltr 5830 of 3 Jan 18
(3) CCSG 5 ltr 5830 Ser N00/595 of 4 Jan 18
(4) CAPT (b) (3) (A), (b) (6) ltr 5830 of 8 Feb 18
(5) CCSG 5 ltr 5830 Ser N00/118 of 9 Feb 18
(6) CAPT (b) (3) (A), (b) (6) ltr 5830 of 14 Mar 18
(7) CCSG 5 ltr 5830 Ser N00/120 of 20 Mar 18
(8) Summary of Interview with LCDR (b) (3) (A), (b) (6), USN
(9) (b) (3) (A), (b) (6), (b) (5)
(10) Statement of Carrier Air Officer, USS RONALD REAGAN (CVN 76)
(11) (b) (3) (A), (b) (6)
(12) Summary of Interview with LT (b) (3) (A), (b) (6), USN
(13) Summary of Interview with AWF2(AW) (b) (3) (A), (b) (6), USN
(14) Summary of Interview with AWF3(AW) (b) (3) (A), (b) (6), USN
(15) C-2A Historical Mishap Data
(16) (b) (3) (A), (b) (6)
(17) (b) (3) (A), (b) (6)
(18) (b) (3) (A), (b) (6)
(19) (b) (3) (A), (b) (6)
(20) (b) (3) (A), (b) (6)
(21) (b) (3) (A), (b) (6)
(22) (b) (3) (A), (b) (6)
(23) (b) (3) (A), (b) (6)
(24) (b) (3) (A), (b) (6)
(25) (b) (3) (A), (b) (6)
(26) (b) (3) (A), (b) (6)
(27) (b) (3) (A), (b) (6)
(28) (b) (3) (A), (b) (6)
(29) (b) (3) (A), (b) (6)
(30) (b) (3) (A), (b) (6)
(31) (b) (3) (A), (b) (6)

(32) (b) (3) (A), (b) (6) [redacted]
(33) (b) (3) (A), (b) (6) [redacted]
(34) CTF 70 BWC email of 24 Nov 17
(35) Summary of Interview with LT (b) (3) (A), (b) (6)
(36) Summary of Interview with AWF1(AW) (b) (3) (A), (b) (6) [redacted]
(37) Summary of Interview with AWF2(AW) (b) (3) (A), (b) (6)
(38) Summary of Interview with AOCS (b) (3) (A), (b) (6)
(39) Summary of Interview with LT (b) (3) (A), (b) (6)
(40) Summary of Interview with LT (b) (3) (A), (b) (6) [redacted]
(41) Summary of Interview with AO1 (b) (3) (A), (b) (6)
(42) Summary of Interview with AN (b) (3) (A), (b) (6)
(43) (b) (3) (A), (b) (6) [redacted]
(44) VRC 30 DET 5 Master flight schedule
(45) Flight plan for PW 33 on 22 Nov 17 from Kadena AFB to RONALD REAGAN
(46) USMC Pacific Policy (3710.4A) regarding SEBD and HESP for passengers
(47) CDR (b) (3) (A), (b) (6) email of 15 Apr 17
(48) Weather brief provided at Kadena AFB on 22 Nov 17
(49) PW 33 Cargo Manifest
(50) RONALD REAGAN CATCC Transcript
(51) RONALD REAGAN CATCC Officer Statement
(52) Statement of AC2 (b) (3) (A), (b) (6) (RONALD REAGAN ATC)
(53) Statement of AC2 (b) (3) (A), (b) (6) RONALD REAGAN ATC)
(54) Summary of Interview with CDR (b) (3) (A), (b) (6) and CDR (b) (3) (A), (b) (6)
(55) NAVAIR C-2A Flooding Analysis Report
(56) SEVENTH Fleet Release of 24 Nov 17
(57) Summary of Interview with LCDR (b) (3) (A), (b) (6) [redacted], MC, USN
(58) SEVENTH Fleet Release of 25 Nov 17
(59) SEVENTH Fleet Release of 16 Feb 18
(60) (b) (3) (A), (b) (6) [redacted]
(61) ADB PW 33 (Closed Work Orders)
(62) ADB PW 33 (A-sheets)
(63) ADB PW 33 (Special Inspections)
(64) ADB PW 33 (Turn Around Records)
(65) Safe for Flight Designation, ATCS Hoag
(66) (b) (3) (A), (b) (6) [redacted]
(67) PW 33 OMA A-sheet of 22 Nov 17
(68) Safe for Flight Designation, ADCS (b) (3) (A), (b) (6)
(69) Statement of ADCS (b) (3) (A), (b) (6)
(70) ADB PW 33 (Flight totals, Hi-Time Components)
(71) PW 33 Engine Efficiency Run Checks
(72) VRC 30 DET 5 NATOPS results from January 2017
(73) COMACCLOG Wing Maintenance email of 21 Mar 18
(74) VRC 30 DET 5 AMCI from April 2017
(75) COMACCLOGWING AMCI Results ltr of 15 Feb 18
(76) VRC 30 DET 5 SFF Memo (77) ADB PW 33 (Weight and Balance)

(78) MCAS Iwakuni Dispatch log 1
(79) MCAS Iwakuni Dispatch log 2
(80) PW 33 fuel log
(81) QA LAB POL BLDG 6830 MCAS Iwakuni
(82) QA LAB POL MCAS Iwakuni
(83) PW 30 fuel chit
(84) Fuel Logs Kadena AFB (Lab Results)
(85) NAVAIR fuel analysis of PW 30 samples taken onboard RONALD REAGAN
(86) Weather report from RONALD REAGAN for 22 Nov 17

Preliminary Statement

1. Purpose and Scope. In accordance with reference (a), this report contains the results of the command investigation convened pursuant to enclosure (1) to inquire into the facts and circumstances surrounding the incident on 22 November 2017, including causes, injuries and damages, and any fault, neglect, or responsibility therefore. Three extensions were requested and approved in enclosures (2) through (7) to allow time for the transportation and analysis of evidence that came available as the investigation progressed. Recommendations of appropriate administrative or disciplinary action are detailed in this report.

2. Executive Summary.

a. On 22 November 2017, two C-2A aircraft from Fleet Logistics Support Squadron (VRC) 30, Detachment 5, Password 33 (PW 33) and Password 30 (PW 30), were scheduled to fly from Marine Corps Air Station (MCAS) Iwakuni to Kadena Air Force Base (AFB). Both aircraft were scheduled to fly onward with all passengers and cargo to USS RONALD REAGAN (CVN 76), which was located in the Philippine Sea approximately 350 nautical miles (nm) from Kadena AFB. LCDR [redacted] (aircraft commander), LT Steven Combs (co-pilot), AWF2(AW) [redacted] (crew chief), and AWF3(AW) [redacted] (crewman) were assigned as the crew for PW 33. In addition to the crew, there were seven U.S. military passengers and approximately 2,200 pounds of cargo onboard PW 33. ABEAN Matthew Chialastri and AOAA Bryan Grosso were two of the seven passengers onboard PW 33, seated in the row of seats farthest forward in the main cabin of the aircraft, toward the cockpit. The aircraft commanders of both PW 33 and PW 30 reported that neither aircraft experienced any electrical or mechanical malfunction during the flights from MCAS Iwakuni to RONALD REAGAN until PW 33 was approximately 15nm from RONALD REAGAN.

b. At 15nm from RONALD REAGAN, the crew of PW 33 began preparations for landing. At 1441:37I, the crew and passengers heard a sudden loud bang. The aircraft immediately began to shake violently and a "foggy," acrid smelling smoke entered the cockpit and cabin. At 1442:00I, PW 33 stated over the radio "Password 33 declaring emergency at this time," followed shortly by "Password 33 dual engine failure." At 1443:00I, exactly one minute after declaring emergency and less than 90 seconds after the initial emergency indications, PW 33 stated to RONALD REAGAN Tower, "Password 33 is going into the water."

c. At 1443:18I, less than two minutes after the initial emergency indications, PW 30 stated to RONALD REAGAN Tower, "Tower, it looks like they (PW 33) are in the water." At 1445:26I, less than four minutes after initial emergency indications, PW 30 stated to Tower, "the whole plane has sunk."

d. Immediately after impacting the water, the two crew members in the cabin of PW 33 assisted passengers in exiting the aircraft through the overhead ditching hatches. The passengers reported rapid flooding of the cabin, with water filling the space from the front of the aircraft within a few seconds. The aircraft commander exited the aircraft through the escape hatch above him in the right seat of the cockpit. None of the Sailors who escaped PW 33 recall seeing LT Combs (who was seated in the left pilot seat in the cockpit), ABEAN Chialastri, or AOAA Grosso in the water after egressing.

e. PW 30 circled the crash site in order to direct Search and Rescue (SAR) capable helicopters to the site. Helicopter Sea Combat Squadron TWELVE (HSC-12) aircraft 610 (H610) arrived at the scene, followed shortly by HSC-12 aircraft 622 (H622). At 1525I, aircraft H610 landed onboard RONALD REAGAN with three rescued Sailors. At 1534I, 51 minutes after PW33 impacted the water, H622 landed onboard RONALD REAGAN with five rescued Sailors.

f. SAR efforts were conducted by RONALD REAGAN, USS STETHEM (DDG 63), USS CHAFEE (DDG 90), USS MUSTIN (DDG 89), and Japanese Maritime Self Defense Force (JMSDF) ships SHIMAKAZE, KAGA, ISE, TERUZUKI, SAZANAMI, and SAMIDARE. Additional aircraft from HSC-12, Helicopter Maritime Strike Squadron SEVEN SEVEN (HSM-77), and the JMSDF joined the aerial search along with a U.S. Navy P-8 aircraft from Patrol Squadron EIGHT of Commander, Task Force SEVEN TWO. At 1000I on 24 November 2017, Commander, Carrier Strike Group FIVE (CSG 5) ceased SAR operations after 43 hours and a search of almost 900 square nautical miles. On 25 November 2017, the Navy publically identified LT Steven Combs, ABEAN Matthew Chialastri, and AOAA Bryan Grosso as the Sailors lost aboard PW 33.

g. U.S. Navy search and salvage efforts located PW 33 on the floor of the Philippine Sea on 29 December 2017, but as of this report the aircraft had not been recovered. While images of PW 33 on the sea floor were captured from a submersible remotely operated vehicle (ROV), technical evaluations are ongoing to determine whether recovery of the aircraft will be possible, given the extreme depth.

h. Interviews were conducted with all surviving PW 33 crewmembers and passengers. Additionally, a thorough review was conducted of all listed enclosures. At this time there are no known maintenance, cargo, fuel, or environmental factors, nor any aircrew action that caused the initial emergency aboard PW 33 on 22 November 2017.

i. There were 101 seconds between initial indications of an emergency and when PW 33 was observed in the water. During this time, the pilots took steps to identify the cause of the

emergency, attempted to regain thrust from at least one engine, and crewmen prepared the passengers and aircraft for a successful ditch at sea. Although practiced routinely throughout training, the last known C-2A ditch was conducted over 40 years ago and a ditch is considered an extremely challenging and dangerous maneuver. Despite the tragedy and loss of three Sailors, the crew of PW 33 should be commended for their efforts that enabled eight Sailors to survive this mishap.

3. Investigating Team.

a. Assistant Investigating Officers: CDR [redacted], USN, USS RONALD REAGAN (CVN 76) and CDR [redacted], USN, Strike Fighter Squadron ONE NINE FIVE (VFA 195).

b. Legal Advisor: LT [redacted], JAGC, USN, Carrier Strike Group FIVE (CSG 5).

4. Administrative and Logistics Support.

a. The Investigating Team received tremendous administrative, technical, and logistics support from CSG 5; Carrier Air Wing FIVE (CVW5); RONALD REAGAN; VFA 195; U.S. Navy Naval Air Systems Command (NAVAIR); C-2 WING; and USS BLUE RIDGE (LCC 19).

b. The Commanding Officer, Detachment 5 (DET 5) Officer-in-Charge, and crew of Fleet Logistics Support Squadron THREE ZERO (VRC-30) provided exemplary support, in addition to providing information to the investigating team.

5. Additional Matters.

a. The focus throughout this report is on PW 33 because it is the aircraft that experienced the emergency. References to PW 30 are made because the two aircraft were on the same flight plan and because of PW 30's role in SAR efforts.

b. All times listed are in "India" time zone, which is nine hours ahead of "Zulu" and was the local time at the site of the mishap.

c. Attempts were made to seek additional information regarding the last known C-2 ditch from both the C-2 Wing and Office of the Judge Advocate General (Code 15). Based on available information, the last known ditch identified was in 1973. No additional information regarding the 1973 mishap is currently available.

d. Naval Air Systems Command (NAVAIR) has conducted an initial analysis on the 25 fuel samples taken from PW 30 aboard RONALD REAGAN on 22 November 2018. A supplemental inquiry may be warranted if final analysis yields results contrary to the initial analysis.

e. On 29 December 2017, PW 33 was located in the Philippine Sea at a depth of approximately 18,000 feet. It is possible that, if recovered, experts would be able to identify the

source of the emergency aboard PW 33. Initial exploration of the site is underway but as recovery of an aircraft at this depth is extremely challenging, it is not possible to anticipate a timeline for those efforts. A supplemental inquiry may be warranted if further exploration or recovery of PW 33 yields additional information that alters the finding, opinions, or recommendations of this report.

Findings of Fact

Background:

1. During November 2017, VRC-30 DET 5, homeported in Atsugi, Japan, was assigned two aircraft to provide logistics support to CSG 5: PW 33 and PW 30. [Enclosure 8]

2. Both PW 33 and PW 30 are C-2A, high wing, twin-engine Carrier Onboard Delivery (COD) aircraft, designed and used to provide fleet commands with high-priority cargo, special weapons, personnel, and mail airlifts between shore stations and aircraft carriers. The aircraft can deliver a combined payload of 10,000 pounds (including the weight of passenger seats, cargo, and miscellaneous support equipment). The crew is normally composed of the pilot (aircraft commander), copilot, and, depending upon mission and local directives, enlisted crew chief and second crewman. See Figure 1. [Enclosure 9]

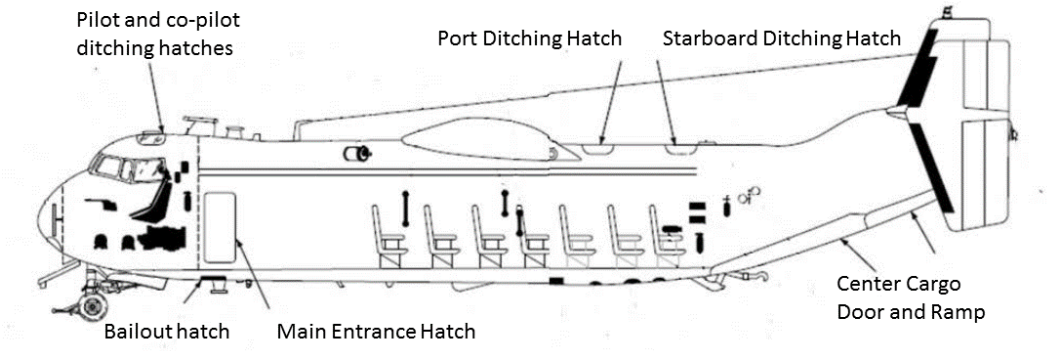

Figure 1 – C-2A Aircraft from port (left) side

3. On 22 November 2017, LCDR [redacted], LT Steven Combs, AWF2(AW) [redacted], and AWF3(AW) [redacted] were assigned as the crew for PW 33. [Enclosures 8, 10-14]

4. Through the course of their aviation training, C-2A pilots and aircrew routinely practice procedures while airborne for emergency landings in the water ("ditches"). As an instructor, LCDR [redacted] had performed numerous practice ditches, including many with LT Combs in the preceding six months. [Enclosure 8]

5. Available information indicates the last U.S. Navy C-2 ditch was conducted in 1973. No information is available on the circumstances or survival rate of that ditch. [Enclosure 15]

6. LCDR [redacted] ("aircraft commander") was assigned, medically cleared, and fully qualified to serve as the aircraft commander of PW 33 on 22 November 2017. In accordance with references (b) and (c), he was current and proficient to fly and his aviation physiology, water survival, C-2 ditch, and egress procedure training were all complete and current. [Enclosures 16-18]

7. LCDR [redacted] had seven continuous hours of sleep the night before the incident and 23 hours of sleep over the previous 72 hours. He had eaten regular meals during that time and had not performed strenuous exercise. [Enclosure 19]

8. As of 22 November 2017, LCDR [redacted] had 2122.1 total flight hours, and 1879.1 flight hours in the C-2A aircraft. [Enclosure 18]

9. LT Combs ("co-pilot") was medically cleared and fully qualified to serve as the second pilot of PW 33 on 22 November 2017. In accordance with references (b) and (c), he was current and proficient to fly and his aviation physiology, water survival, C-2 ditch, and egress procedure training were all complete and current. [Enclosures 20-22]

10. As of 22 November 2017, LT Combs had 1234.1 total flight hours, and 994.1 flight hours in the C-2A aircraft. [Enclosure 22]

11. AWF2 [redacted] was medically cleared and fully qualified to serve as the crew chief of PW 33 on 22 November 2017. In accordance with references (b) and (c), he was current and proficient to serve as air crew for this flight and his aviation physiology, water survival, C-2 ditch, and egress procedure training were all complete and current. [Enclosures 23-25]

12. AWF2 [redacted] had six continuous hours of sleep the night before the incident and 18 hours of sleep over the previous 72 hours. He had eaten regular meals during that time and had not performed strenuous exercise. [Enclosure 26]

13. As of 22 November 2017, AWF2 [redacted] had 1941.9 total flight hours, and 1334.9 flight hours in the C-2A aircraft. [Enclosure 25]

14. AWF3 [redacted] was medically cleared and fully qualified to serve as the second crewman of PW 33 on 22 November 2017. In accordance with references (b) and (c), he was current and proficient to serve as air crew for this flight and his aviation physiology, water survival, C-2 ditch, and egress procedure training were all complete and current. [Enclosures 27-29]

15. AWF3 [redacted] had eight continuous hours of sleep the night before the incident and 22 hours of sleep over the previous 72 hours. He had eaten regular meals during that time and had not performed strenuous exercise. [Enclosure 30]

16. As of 22 November 2017, AWF3 [redacted] had 257.6 total flight hours, and 257.6 flight hours in C-2A aircraft. [Enclosure 29]

17. The toxicology screens of all surviving PW 33 aircrew revealed no ethanol, drugs, or elevated carboxyhemoglobin (carbon monoxide). [Enclosures 31-33]

Timeline:

a) Flight Plan and Briefing:

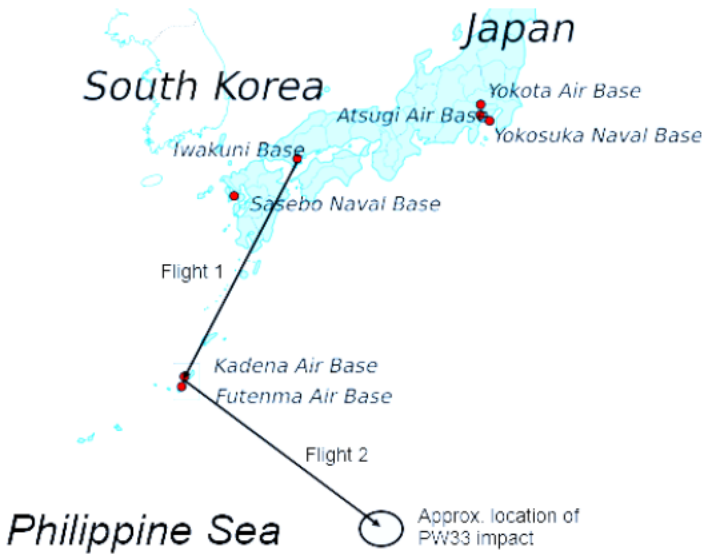

Figure 2 – Map depicting relative locations of MCAS Iwakuni, Kadena AFB, and RONALD REAGAN in Philippine Sea

18. On the afternoon of 22 November 2017, PW 33 and PW 30 were scheduled to fly from MCAS Iwakuni to Kadena AFB to refuel. Both aircraft were then scheduled to fly onward with all passengers and cargo to RONALD REAGAN, which was located in the Philippine Sea, approximately 350nm from Kadena AFB. See Figure 2. [Enclosures 8, 11-14, 34-43]

19. PW 33 and PW 30's flight plan for 22 November 2017 was filed with and approved by the VRC 30 DET 5 Officer in Charge and filed with flight control at MCAS Iwakuni and Kadena AFB. [Enclosures 44, 45]

20. At 0530I, the crewmen began loading cargo into PW 33 and PW 30. [Enclosures 13, 14]

21. AWF3 [redacted] conducted the pre-flight passenger brief for the passengers of PW 33. [Enclosures 13, 14, 38-42]

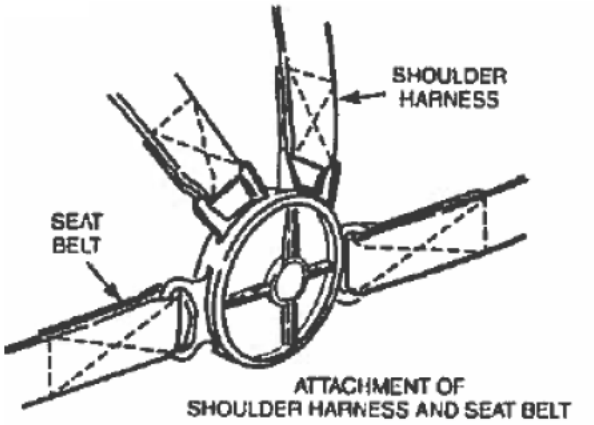

Figure 3 – Four-point harness restraint for C-2A passengers from reference (b)

22. Per reference (b), chapter 25, paragraph 3.2.3, the Naval Air Training and Operating Procedures Standardization (NATOPS) for the C-2A, the pre-flight passenger brief covered destination and estimated time en route, seat and seatbelt/shoulder strap operation (see Figure 3), life preservers, takeoff or catapult launch, en route procedures, normal or arrested landing, use of sound attenuation devices, use of cranial protector device, ship or terminal procedures, emergency exits for egress, the location and removal of liferafts, overhead oxygen equipment, and prohibition of handheld items during shipboard operations. [Enclosure 9]

23. Passengers recalled the safety brief provided in Iwakuni covered the route for the day's flights, life preservers (LPUs), cranials, seatbelts or "harnesses," hatches and ramp for emergency egress, life rafts, and overhead oxygen equipment. One Sailor with numerous COD flights as a passenger stated the brief covered all required items. [Enclosures 9, 13, 14, 38-42]

24. Per reference (d), Marine Forces Pacific (MARFORPAC) Policy on Supplemental Emergency Breathing Devices (SEBD) and Helicopter Egress System for Passengers (HESP), "Mission: To augment safety and egress ability, passengers embarked aboard MARFORPAC rotary wing or tilt-rotor aircraft that anticipate overwater flight . . . shall be issued a SEBD/HESP to the maximum extent possible," subject to requirements for training and briefing. [Enclosure 46]

25. Per reference (e), Commander, Naval Air Forces (CNAF) Instruction M-3710.7, all aircrew of helicopter, tiltrotor, E-2, and C-2 aircraft complete training on SEBD equipment. For all overwater flights with these aircraft, aircrew are required to carry personal SEBD and the flight approving authority may provide SEBD or similar equipment to any passengers who have completed applicable training. In accordance with reference (e), members of the PW 33 aircrew were issued and carried the SRU-42 Helicopter Aircrew Breathing Device (HABD). Passengers aboard PW 33 were not issued SEBD. [Enclosure 47]

26. Passengers randomly selected seats as they entered the cabin. ABEAN Matthew Chialastri and AOAA Bryan Grosso were in the row of seats farthest forward in the main cabin of the aircraft, toward the cargo and cockpit. See Figure 4. [Enclosures 13, 14, 40, 41]

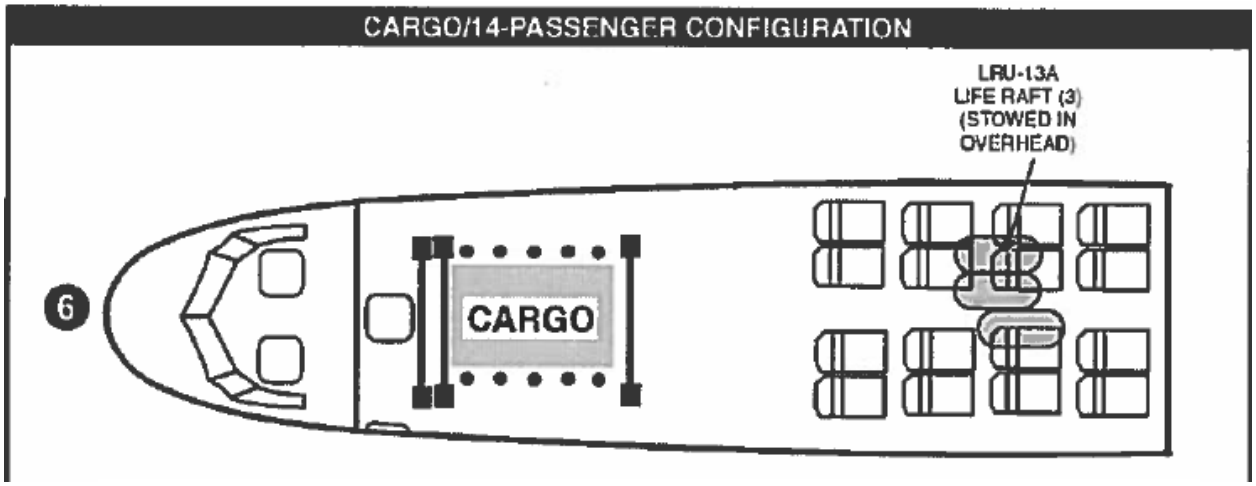

Figure 4 – C-2A configuration similar to that in place on PW 33 on 22 November 2017 from reference (b)

27. The aircraft commander briefed the flight plans to the pilots of both PW 33 and PW 30 at MCAS Iwakuni at 0700I on 22 November 2017 prior to take off. One brief was given to both crews covering NATOPS procedures, ORM, and flight planning because both aircraft would be flying the same flight plan. [Enclosures 8, 12, 35, 44]

28. The aircraft commanders of both PW 33 and PW 30 received an updated weather brief and location for RONALD REAGAN while at Kadena AFB. They assessed that no change was required to the flight plan. [Enclosures 8, 12, 48]

29. While at Kadena AFB, both aircraft commanders also confirmed RONALD REAGAN's position and divert airfields should they not be able to land on RONALD REAGAN. [Enclosures 8, 10, 12-14, 35, 45, 48]

b) Flight:

30. At takeoff from MCAS Iwakuni at 0830I, there were two pilots, two crew members, seven U.S. military passengers, and approximately 2,200 pounds of cargo aboard PW 33. [Enclosures 8, 11-14, 34, 38-42, 49]

31. The aircrew of both PW 33 and PW 30 reported that neither aircraft experienced any electrical or mechanical issues during the flight from MCAS Iwakuni to Kadena AFB. [Enclosures 8, 12-14, 35-37]

32. Both aircraft refueled while at Kadena AFB. The aircraft commanders called ahead to coordinate a fuel truck and the crews waited 30 to 45 minutes for a fuel truck to arrive. [Enclosures 8, 12-14, 35-37]

33. When the fuel truck arrived, it was manned by a member of the U.S. Air Force (USAF). Both PW 33 and PW 30 took on approximately 8,000 pounds of fuel. [Enclosures 13, 14, 35-37]

34. PW 33 departed Kadena AFB for RONALD REAGAN at approximately 1245I, followed five minutes later by PW 30. [Enclosures 8, 10, 12, 35]

35. The two aircraft maintained communications with each other during the flight and kept a distance of about 20nm from each other at an altitude of 23,500 feet. [Enclosures 8, 12, 35]

Figure 5 – View into a C-2A cockpit, facing forward, showing left and right seats, each with a ditching hatch above.

36. Both the left and right pilot position can control the aircraft. However, based on the position of numerous gauges and improved visibility from the left seat while landing on an aircraft carrier, the left seat is considered the

normal position for the pilot in control of the aircraft and is the only position from which to land on an aircraft carrier. The co-pilot, LT Combs, was in the left seat as PW 33 approached RONALD REAGAN. See Figure 5. [Enclosure 8]

37. At approximately 50nm from RONALD REAGAN, both aircraft established communications with the carrier in preparation for arrival. [Enclosures 8, 12, 35]

38. At 15nm from RONALD REAGAN, PW 33 was at an altitude of approximately 1,200 feet and a speed of approximately 210 knots. [Enclosures 8, 12]

c) Incident:

39. The aircraft commanders of both PW 33 and PW 30 reported that neither aircraft experienced any electrical or mechanical malfunction during the flight from Kadena AFB until approximately 15nm from RONALD REAGAN. [Enclosures 8, 12, 35]

40. At 15nm from RONALD REAGAN, the crew of PW 33 began to check passenger harnesses, protective gear, and flotation gear in preparation for landing. [Enclosures 13, 14, 39, 40]

41. At 1441:37I, the co-pilot began making a "load report" (a radio check-in transmission that included their position, number of personnel onboard, total cargo weight, and fuel remaining) to Air Traffic Control aboard RONALD REAGAN ("Marshal"). He stopped mid-sentence as there was a sudden loud bang, described as being similar to a gunshot or an explosion. [Enclosures 8, 12, 50-53]

42. The passengers and crew members in the cabin also heard the loud noise, which they all described as a "loud bang." [Enclosures 13, 14, 38-42]

43. The aircraft immediately began to shake violently and a "foggy," acrid smelling smoke entered the cockpit and cabin. [Enclosures 8, 13, 14, 38-42]

44. Marshal asked PW 33 to repeat the load report. At 1442:00I, PW 33 stated "Password 33 declaring emergency at this time." [Enclosures 50-53]

45. Marshal asked for clarification and PW 33 stated at 1442:31I, "Password 33 dual engine failure." [Enclosures 50, 51]

46. The aircraft commander of PW 30 relayed the message to RONALD REAGAN Tower. [Enclosures 12, 35, 50, 53]

47. The crew members in the cabin began preparing for a ditch by removing and stowing the forward of the two ditching hatches, which provide emergency egress from the aircraft. There was not enough time before impact for them to remove the aft ditching hatch. [Enclosures 13, 14]

48. PW 30 increased its speed toward PW 33 to be in position to provide any assistance needed for possible rescue efforts. [Enclosure 12]

49. At 1443:00I, exactly one minute after initially declaring an emergency, PW 33 stated to Marshal, "Password 33 is going in the water." Eighteen seconds later, at 1443:18I, PW 30 stated to RONALD REAGAN Tower, "Tower, it looks like they are in the water. We need to launch somebody to come get them." [Enclosure 50]

d) Aircraft Egress:

50. Immediately after impact, the two crew members in the cabin released their harnesses and worked to remove and stow the aft ditching hatch. They reported that this process took 15 to 20 seconds, by which time the water inside PW 33 toward the rear of the aircraft was at chest height. One of the crew members attempted to remove a life raft but was not able to do so before the rising water forced him to exit the aircraft. See Figure 6. [Enclosures 13, 14, 39]

51. The passengers reported rapid flooding of the cabin, with water filling the space from the front of the aircraft within a few seconds. One reported that it quickly went dark in the cabin from all the water and another stated that before he had time to take a breath, the water had covered his head. [Enclosures 39, 41]

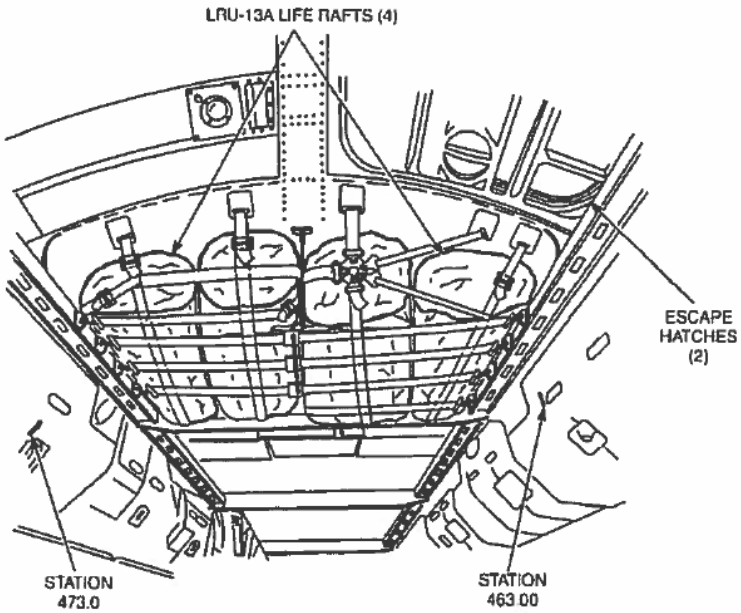

Figure 6 – Forward view in C-2A cabin of ditching hatches and life rafts from reference (b).

52. Passengers unhooked their harnesses and swam toward the open hatches. See Figure 7. A Sailor reported he swam "to where I remembered the hatch to be, but I was stuck behind an object and I couldn't get through. I had to go down and around to get out." Another Sailor stated that he "found an air pocket to get a second breath and then swam towards the escape hatch." Four were able to exit through the forward hatch, though one does not recall anything between impact and being on the surface of the water. [Enclosures 38-41]

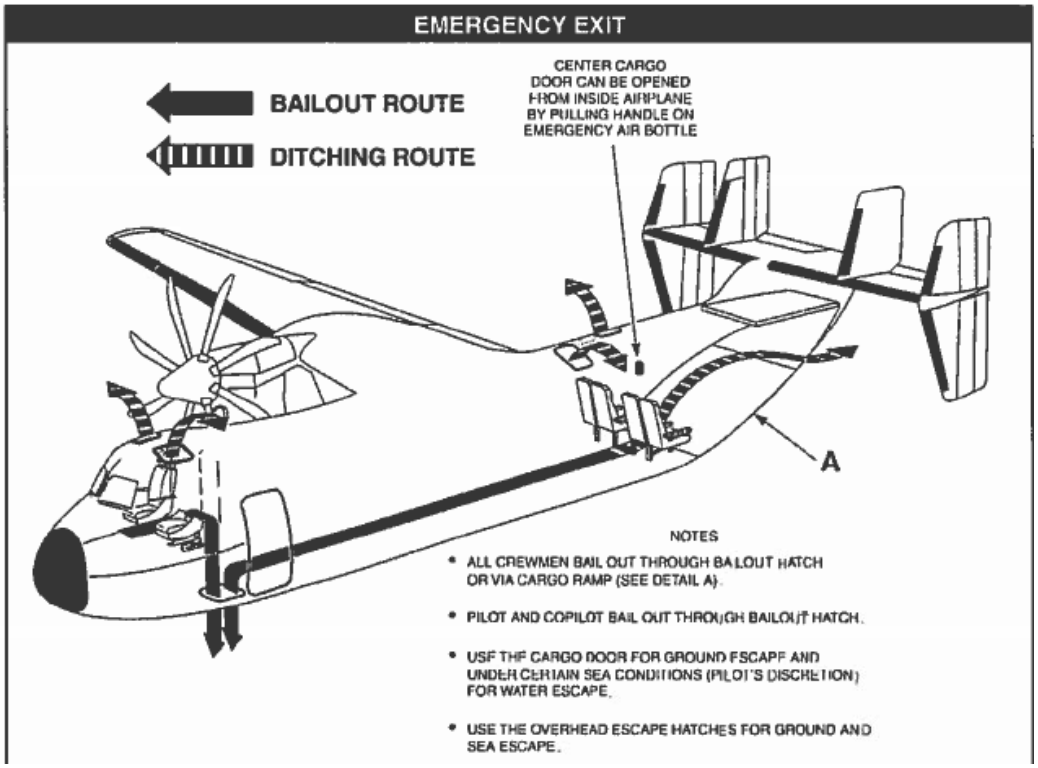

Figure 7 – Diagram depicting emergency exit from a C-2A aircraft from reference (b).

53. The two crew members observed four passengers exiting the forward hatch and worked to help a fifth passenger exit the aft hatch. At that time, the aircraft was tilted nose-down in the water and, within approximately 30 seconds of impact, only the tail was visible. [Enclosures 13, 14]

54. Immediately after impact, the aircraft commander reached up to the escape hatch above his head and found that it was already open. He released his harness and pushed up and out of the aircraft. [Enclosure 8]

55. The aircraft commander observed that the forward half of the aircraft was submerged and the aft half was tilted up at an angle. The engines were already under water and only the back half of the wings was above water. [Enclosure 8]

56. The aircraft commander saw others climbing out of the aircraft. He estimated that the tail of the aircraft was six to eight feet in the air, which allowed the people in the rear of the aircraft to escape. [Enclosure 8]

57. The aircraft commander's flotation device did not inflate properly, so he called out to one of the crew members for assistance. The crew member was located approximately 30 yards away, where he had grouped two of the passengers; he swam over to assist the aircraft commander. [Enclosures 8, 14]

58. The aircraft commander and the assisting crew member attempted to inflate a life raft in a nearby seat pan that had come loose from the cockpit. When that did not work, they swam to and huddled with the two passengers, helping keep the aircraft commander afloat. [Enclosures 8, 14]

59. The second crew member grouped together the other three passengers who had escaped the aircraft and attempted to keep them calm by talking through the SAR procedures occurring on RONALD REAGAN and emphasizing how close they were to the ship. In his assessment, the passengers were remarkably calm. [Enclosure 13]

60. One passenger recalled that the right engine looked somewhat out of place, but recalled no major damage to the body or tail of the aircraft. Another passenger recalls that the tail appeared to be intact and above water. [Enclosures 39, 41]

61. At 1445:26I, approximately two minutes after first reporting that PW 33 was in the water, PW 30 stated to Tower, "the whole plane has sunk." [Enclosure 50]

62. At the request of the investigating officer, NAVAIR analyzed the rate at which a C-2A aircraft could be expected to flood and submerge based on location of ditching hatches and the configuration of passenger and cargo load. The analysis considered flooding rates for a C-2A aircraft impacting the water under various conditions, including with a 15 degree nose-down angle to replicate the conditions of the PW 33 impact described by crew and passengers. See Figure 8. [Enclosure 55]

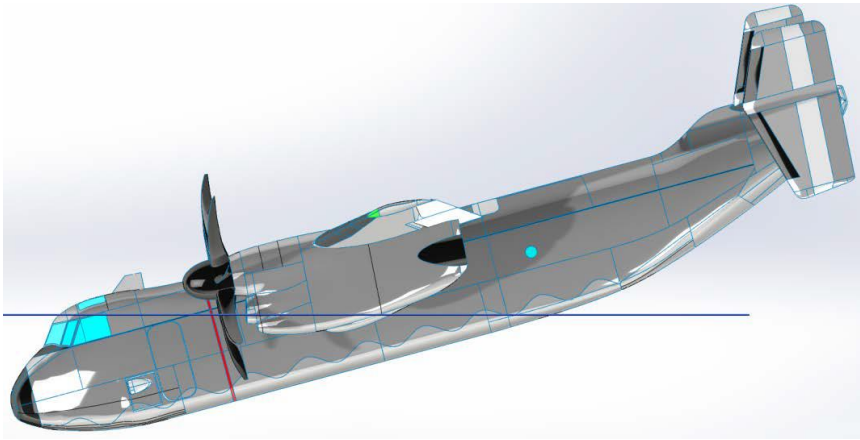

Figure 8 – Rendering by NAVAIR of impact at 15 degrees nose-down

63. NAVAIR assessed that the submersion rate of approximately two minutes after impact reported by passengers and crew onboard PW 33 was within the modeled timeframe. [Enclosure 55]

64. Analysts assessed that under certain conditions a C-2A aircraft could submerge in as few as 20 seconds. [Enclosure 55]

65. None of the Sailors who escaped PW 33 recalled seeing LT Combs, ABEAN Chialastri, or AOAA Grosso in the water. [Enclosures 8, 13, 14, 38-42]

e) Search and Rescue:

66. PW 30 provided PW 33's location, approximately 12nm northwest of RONALD REAGAN, for the already-airborne rescue helicopters. [Enclosure 50]

67. PW 30 remained and circled the crash site in order to direct SAR-capable helicopters to the site once they arrived. [Enclosures 12, 35-37]

68. At 1447I, HSC-12 aircraft 610 (H610) arrived at the scene. PW 30 worked to direct H610 to the location where PW 33 had submerged. [Enclosure 49]

69. At 1449:48I, six minutes after PW 33 impacted the water, H610 reported "visual on the survivors." [Enclosure 50]

70. The survivors in the water observed helicopters on scene for airborne SAR efforts within moments of impact. [Enclosures 8, 12-14, 56]

71. At 1452:55I, H610 reported that they were "executing rescue right now." [Enclosure 49]

72. Once established in a hover overhead the survivors, a rescue swimmer onboard H610 entered the water and helped crew members identify the order in which to lift Sailors into the helicopters based on injuries and working flotation devices. [Enclosures 8, 13, 14, 38-42]

73. At 1453:08I, Tower received the geographic position of the site from Strike Fighter Squadron TWO SEVEN (VFA-27) aircraft MACE 215. [Enclosure 50]

74. At 1455I, RONALD REAGAN was designated by Commander, CSG 5 as the SAR Mission Coordinator. [Enclosure 56]

75. At 1459I, events with the JMSDF were suspended and airborne aircraft were diverted from RONALD REAGAN to Kadena AFB (17 aircraft) and Iwo To Air Base (one aircraft). [Enclosure 56]

76. The Medical Department on RONALD REAGAN was notified and began preparing emergency medical equipment and beds for survivors of the crash. [Enclosure 57]

77. Once the rescue helicopters had located the crash site, the RONALD REAGAN Air Boss requested PW 30 return to RONALD REAGAN. PW 30 landed on the carrier at 1500I. [Enclosures 12, 35, 53, 56]

78. At 1525I, 42 minutes after PW 33 impacted the water, aircraft H610 landed onboard RONALD REAGAN with three rescued Sailors. At 1534I, HSC-12 aircraft H622 landed onboard the carrier with five rescued Sailors. [Enclosures 8, 12-14, 35-42, 56]

79. The Senior Medical Officer, Ship Surgeon, and Medical Response Team met the Sailors on the flight deck to begin triage medical services. All eight Sailors were escorted to the RONALD REAGAN Medical Department, where they received emergency medical care. [Enclosure 57]

80. By 1700I, seventeen diverted aircraft had landed safely at Kadena AFB and one diverted aircraft had landed safely at Iwo To Air Base. [Enclosure 56]

81. Surface SAR efforts were initiated by RONALD REAGAN, STETHEM, and JMSDF ships SHIMAKAZE and KAGA. [Enclosure 56]

82. An additional aircraft from HSC-12 joined the aerial search from approximately 1705I to approximately 0143I on 23 November 2017. By 1806I, a P-8 aircraft from Patrol Squadron EIGHT within Commander, Task Force 72 had joined the search. [Enclosure 56]

83. By 1803I, RONALD REAGAN and STETHEM had each put a rigid-hulled inflatable boat (RHIB) into the water to support SAR efforts. The RHIBs were removed from the water by 1906I due to safety considerations related to nightfall and the sea state. [Enclosure 56]

84. At 1923I, USS CHAFEE (DDG 90) arrived on scene to assist with search efforts. [Enclosure 56]

85. By approximately 2200I, six of the eight Sailors rescued from PW 33 were discharged from the Medical Department after a standard six hour post-trauma observation period. All had contusions and abrasions consistent with a serious car accident and one received stitches to the inside and outside of his lip. [Enclosures 8, 9, 13, 14, 38-42]

86. Two of the eight Sailors were kept in the Medical Department for observation and additional medical care. One received oxygen by emergency rebreather to treat low levels of oxygen saturation. The other suffered severe swelling of his jaw, an injured arm, and a cut to his forehead that required stitches. [Enclosures 9, 38, 39]

87. By 0014I on 23 November 2017, RONALD REAGAN, STETHEM, CHAFEE, SHIMAKAZE, and KAGA were joined on scene by USS MUSTIN (DDG 89) and JMSDF ships ISE, TERUZUKI, SAZANAMI, and SAMIDARE. All surface vessels were conducting expanding searches based on the initial crash site and accounting for set and drift. [Enclosure 56]

88. By 0222I on 23 November 2017, SAR efforts had searched approximately 208 square nautical miles. Surface and air units were searching as assigned by the on-scene commander. One JMSDF helicopter joined the helicopters from HSM-77 and HSC-12. [Enclosure 56]

89. By 0721I on 23 November 2017, SAR efforts had searched approximately 320 square nautical miles. [Enclosure 56]

90. At 1800I on 23 November 2017, the patient from PW 33 with low oxygen saturation and elevated heart rate had stabilized and was discharged from the Medical Department. [Enclosures 9, 38]

91. At 1000I on 24 November 2017, Commander, CSG 5 ended SAR operations after 43 hours and a search of almost 900 square nautical miles. [Enclosure 56]

92. At 1140I on 24 November 2017, the patient from PW 33 with an injury to his jaw and arm was discharged from the Medical Department after confirmation that he had no broken bones and once swelling to his jaw had reduced enough for him to consume soft foods. [Enclosures 9, 39]

93. On 25 November 2017, Commander, SEVENTH Fleet publically identified LT Combs, ABEAN Chialastri, and AOAA Grosso as the Sailors lost onboard PW 33. [Enclosure 58]

94. On 29 December 2017, U.S. Navy search and salvage efforts located the wreckage of PW 33. As of this report, salvage efforts were ongoing but had not been able to recover PW 33 for more detailed analysis. [Enclosure 59]

95. Images of PW 33 obtained using a ROV indicated major structural damage to the aircraft. The cockpit separated from the fuselage of the aircraft. [Enclosure 60]

96. There was significant damage visible to the right engine: the upper section of the nacelle casing is no longer present; damage is evident between the propeller and forward edge of the wing; and there is a soot streak on the wing aft of the right nacelle. There was no external damage visible to the left engine. [Enclosure 60]

97. The tips of the propeller blades for the right engine shattered. The propeller blades for the left engine were relatively intact. All ditching hatches were open. [Enclosure 60]

<u>Incident Factors:</u>

a) Maintenance:

98. For every U.S. Navy aircraft, regular inspections are required to identify any discrepancies, i.e., equipment or material that deviates from perfect condition. Discrepancies are noted as “D” for requiring the aircraft remain down until repair, “U” for a discrepancy that does not prevent flying the aircraft, or “P” for discrepancies that make the aircraft partially mission capable. These are recorded in the aircraft discrepancy book (ADB) and must be corrected if they prevent safe operation of the aircraft in flight. Once completed, the “job status” is listed as “JC” for “job complete.” [Enclosure 61]

99. Per reference (b), a standard report for discrepancy corrections covers the previous ten flights. For the ten flights before 22 November 2017 (1 November 2017 to 18 November 2017),

PW 33 had 51 discrepancies. Before the flight on 22 November 2017, all discrepancies for PW 33, even those with which the aircraft could have safely flown, had been corrected. [Enclosures 61, 62]

100. Per a professional evaluation from an experienced E-2 Naval Aviator and Carrier Air Officer, the number of discrepancies conforms to expectations for this kind of aircraft and is not considered abnormal. [Enclosure 10]

101. As of 22 November 2017, the ADB for PW 33 listed all required inspections, special inspections, and technical directives as current and complete for the airframe, engines, propellers, and flight gear. [Enclosure 63]

102. On 21 November 2017, a daily inspection of PW 33 was signed by ATCS [redacted] The upper and lower walk-around bottles (WABS, bottles of oxygen for the crew to use in the event of adverse conditions in flight requiring oxygen, such as fire, smoke and fumes, etc.) were noted as being below limits, but were restored to limits prior to flight and this discrepancy was signed off as corrected. No other problems were noted. [Enclosure 64]

103. ATCS [redacted] was qualified and designated to conduct daily inspections of C-2A aircraft. [Enclosure 65]

104. On 21 November 2017, a turn-around inspection of PW 33 was signed off by AWF1 [redacted] The upper and lower WABS were noted as being below limits, but were restored to limits prior to flight and this discrepancy was signed off as corrected. No other problems were noted. [Enclosure 64]

105. AWF1 [redacted] was qualified and designated to conduct turn-around inspections of C-2A aircraft. [Enclosure 66]

106. On 22 November 2017, ADCS(AW) [redacted] reviewed the ADB and signed the acceptance sheet ("A-sheet") releasing PW 33 as safe for flight. [Enclosure 67]

107. ADCS [redacted] was qualified and designated to release C-2A aircraft as safe for flight. [Enclosure 68]

108. On 22 November 2017, the aircraft commander reviewed the ADB and signed the aircraft as safe for flight, indicating that he had reviewed all maintenance completed on PW 33 and assessed the aircraft as safe for all operations. [Enclosure 64, 67]

109. ADCS [redacted] confirmed that all VRC 30, DET 5 maintenance tools were properly accounted for prior to the launch of PW 33 from MCAS Iwakuni on 22 November 2017. [Enclosure 69]

110. U.S. Navy C-2A airframes have an average of 10,210 total flight hours. The engines for these aircraft have an average of 9,064 hours. [Enclosure 10]

111. On 22 November 2017, the PW 33 airframe had a total of 9,745.6 flight hours. The left engine had 9,586.8 hours and the right engine had 12,353.4 hours. [Enclosures 67, 70]

112. The limit for C-2A engine life is based on efficiency, rather than total hours. If a C-2A aircraft has an engine efficiency test result below 95% efficiency, the aircraft is taken out of operation until additional tests and repairs can be completed. [Enclosure 10]

113. On 2 November 2017, VRC 30 DET 5 conducted efficiency tests on the left and right engines of PW 33, demonstrating 104.64% and 102.28% efficiency, respectively. [Enclosure 71]

114. In January 2017, VRC 30 DET 5 received a NATOPS Unit Evaluation and earned a grade of "EXCELLENT." LCDR [redacted] was designated as the Operational Risk Management Program Manager. There were minor discrepancies noted with the Cockpit Resource Management program, assessed to be easily correctable with in-house administrative corrections. [Enclosure 72]

115. From 24-26 April 2017, the Maintenance Inspection Team of Commander, Airborne Command and Control Logistics Wing (COMACCLOGWING) conducted an Aircraft Material Condition Inspection (AMCI) of VRC 30 DET 5. The Detachment received a grade of "PASS," with PW 33 assessed to be above fleet average. [Enclosures 73, 74]

116. From 12-16 February 2018, the COMACCLOGWING Maintenance Programs Assessment Team (CMPAT) conducted an AMCI of VRC 30, DET 5. The AMCI evaluated both PW 30 and the C-2A aircraft sent to replace PW 33. The CMPAT identified five discrepancies that were flight critical, resulting in a failing grade. [Enclosures 75, 76]

117. The February 2018 results for VRC 30, DET 5 aircraft were below the 2017 AMCI average for C-2A aircraft, but the CMPAT concluded that, "[o]verall, the practical proficiency examinations and contingency drills show the maintenance department is effective in routine maintenance performance." [Enclosures 73, 75]

118. From 12-16 February 2018, CMPAT conducted a Maintenance Programs Assessment (MPA) of VRC 30 DET 5. The MPA evaluated 11 of 11 contingency drills and 60 of 63 practical proficiency examinations as satisfactory. The CMPAT evaluated 37 Naval Aviation Maintenance Program (NAMP) programs and found nine to be "off track." [Enclosure 76]

119. As a result of the February 2018 MPA, the CMPAT urged immediate attention to the "off track" programs and identified ten additional programs that required more attention. The CMPAT ultimately assessed that "all discrepancies are within VRC-30 Det Five Maintenance Department's ability to rectify." [Enclosure 76]

b) Cargo:

120. The cargo on PW 33 at the time of the incident consisted of medical supplies and parts for RONALD REAGAN and the embarked squadrons of CVW-5. [Enclosure 48]

121. The total weight of all cargo, not including passengers, was calculated to be 2,200lbs. [Enclosure 77]

122. No member of the crew or passenger reported any issues related to the cargo or any cargo coming loose in the cabin before, during, or after the incident. [Enclosures 13, 14, 38-42]

c) Fuel:

123. On 18 November 2017, the last flight before 22 November 2017, PW 33 received 1,097 gallons of fuel from MCAS Iwakuni fuel truck 596 and, after a flight that day, received another 1,017 gallons of fuel from MCAS Iwakuni fuel truck 262. On 20 November 2017, PW 33 received 74 gallons of fuel from MCAS Iwakuni fuel truck 715. [Enclosures 78, 79]

124. Fuel samples were taken from PW 33 at MCAS Iwakuni at approximately 0600I on 22 November 2017. The samples showed good quality fuel, with a clear and bright visual inspection and water and sediment content within allowable limits. [Enclosure 80]

125. The quality assurance fuel sample logs for MCAS Iwakuni fuel trucks 596, 262, and 715, taken 22 and 23 November 2017 indicated good quality fuel, with water and sediment content within allowable limits. [Enclosures 81, 82]

126. On 22 November 2017 at approximately 1200I, PW 33 received fuel from Kadena AFB fuel truck 589. [Enclosure 13, 14, 35, 83]

127. Aerospace Fuel Laboratory fuel quality assurance analysis conducted on samples from Kadena AFB fuel truck 589 and Kadena AFB fuel tanks taken on 22 November 2017 indicated good quality fuel that passed all tests. [Enclosure 84]

128. Fuel samples were collected from PW 30 aboard RONALD REAGAN on 22 and 23 November 2017 because post-mishap fuel samples could be collected from PW 33. NAVAIR conducted initial testing on the 25 fuel samples taken from PW 30. The first two samples taken reflect a higher water and particulate contamination, but the remaining 23 samples were assessed by NAVAIR to have minimal-to-no water or particulate contamination. Additionally, NAVAIR tested the low pressure, high pressure, and APU filters and found that none contained significant particulate material or showed signs of abnormalities or indications of poor performance. [Enclosure 85]

d) Environmental:

129. The weather report for RONALD REAGAN on 22 November 2017 through 1800I was variably cloudy with some rain showers, a high of 81 degrees Fahrenheit and a low of 77 degrees Fahrenheit. Winds were 20-25 knots from the east. Sunset was 1727I. [Enclosure 86]

130. PW 33 passengers reported that during the approach to RONALD REAGAN there was minimal turbulence. [Enclosures 40-42]

131. PW 33 and PW 30 pilots described the weather during the flight from Kadena AFB to RONALD REAGAN as clear, with a strong tailwind in the direction of RONALD REAGAN. [Enclosures 8, 12, 35]

132. The pilots of PW 33 and PW 30 reported seeing no birds in the vicinity of the incident. [Enclosures 8, 12-14, 35-37]

133. RONALD REAGAN weather forecasters assessed there were six to eight foot seas in the vicinity of the crash site at the time of the incident on 22 November 2017. [Enclosure 86]

134. Individuals in the water after PW 33's impact assessed swells ranged from 8 to 15 feet. [Enclosures 8, 12-14, 35-37, 47, 86]

e) Pilot and Crew Action:

135. At 1442:00I, PW 33 stated "Password 33 declaring emergency at this time." Marshal asked for clarification and PW 33 stated at 1442:31I, "Password 33 dual engine failure." [Enclosure 50]

136. While the PW 33 aircraft commander began to troubleshoot the aircraft emergency, he ordered the co-pilot to continue flying the aircraft. The co-pilot pulled back on the yoke to gain altitude but the aircraft commander estimated that they did not reach more than 1,500 feet. [Enclosure 8]

137. Following the loud "bang," there was excessive vibration felt throughout the aircraft, but initially there were no caution lights, fire lights, or visible damage observed on either engine from the cockpit. [Enclosure 8]

138. Per reference (b), chapter 14, paragraph 1, if excessive vibration or roughness occurs, engine shutdown is recommended. [Enclosure 9]

139. Per reference (b), chapter 14, paragraph 1, with excessive engine vibration it may be difficult to determine which engine has failed and cockpit instruments may be unreadable. See Figure 9. [Enclosure 9]

Figure 9 - Warning provided in C-2A NATOPS, reference (b)

WARNING

With excessive engine vibration, it may be difficult to determine which is the affected engine. Cockpit instruments may be unreadable. Possible indications include caution lights, fire lights, and visible damage.

140. Limited time was available for the aircrew due to the low altitude, and violent shaking made the cockpit instruments almost unreadable. The co-pilot and the aircraft commander assessed that the left engine was causing the vibrations and needed to be shut down, and took steps to secure the left engine by pulling the left engine T-handle to shut off fuel. [Enclosure 8]

141. Despite a momentary lull, the vibrations continued and a right engine "chip light" illuminated, indicating that small pieces of metal were detected in the engine oil system of the right engine. Based on the continued vibrations and right engine chip light, the aircraft commander determined that the right engine was failing and rapidly losing torque. [Enclosures 8, 38]

142. In order to regain torque from at least one engine, the aircraft commander made the decision to re-start the left engine and attempted to "airstart." Airstarting an engine is an attempt to start the engine while the aircraft is airborne. [Enclosure 8]

143. When the aircraft commander began airstart procedures, PW 33 was at an altitude of approximately 1,500 feet. Immediately before the engine issues began, PW 33 was traveling at approximately 210 knots. During the emergency procedures, PW 33 decelerated to less than 180 knots. [Enclosures 8, 12, 38]

144. Per reference (b), chapter 14, paragraph 5, the optimum airstart parameters are temperature less than 212 Celsius, altitude less than 25,000 feet, and airspeed between 150 and 180 knots. [Enclosure 9]

145. The aircraft commander made two unsuccessful attempts to airstart the left engine. [Enclosure 8]

146. Per reference (b), chapter 14, paragraph 6, in the event of dual-engine failure in flight, "if an airstart cannot be accomplished: bail out, land, or ditch." [Enclosure 9]

147. Per reference (b), chapter 11, paragraph 8.2.4, "if altitude cannot be maintained, altitude remaining does not permit a safe bailout, and a controlled landing is not possible, then a ditch may be the only option." NATOPS lists the following factors in order of importance for increasing the probability for successful ditch: aircraft under control to assure wings are level, nose slightly above the horizon, and fuselage aligned with flight path; minimal rate of descent while maintaining control; minimal forward speed consistent while maintaining control and minimal rate of descent." [Enclosure 9]

148. With neither engine operational, the aircraft was rapidly losing lift and descending through 500 feet above the water. The aircraft commander told the co-pilot that they would have to ditch the aircraft into the ocean. [Enclosure 8]

149. The aircraft commander adjusted the flaps to increase the aircraft's lift and ability to execute a stable water landing. He then put his hands on the yoke to assist the co-pilot in holding the aircraft steady as it impacted the ocean at a speed of approximately 110 knots. [Enclosure 8]

150. When the PW 33 aircraft commander told the co-pilot they would have to ditch, one of the crew members in the cabin used the aircraft internal communications system to ask whether the aircraft commander wanted them to prepare for ditching by opening the ditching hatches. The aircraft commander replied yes. [Enclosures 8, 13, 14]

151. The two crew members ordered passengers to secure their harnesses, removed the ditching hatch closest to the front of the aircraft, and stowed the hatch prior to impact. [Enclosures 13, 14, 38, 40-42]

152. The aircrew assessed the aircraft was too close to the water for the air crew to safely remove and stow the second hatch (aft) before impact. They took their seats, strapped in, and within seconds the aircraft impacted the water. One crew member did not have time to fasten his flotation gear. Immediately after impact, the air crew removed the aft hatch and assisted the passengers in egressing the cabin. [Enclosures 13, 14]

153. Per reference (b), there is limited information available about the expected damage in a C-2A ditch and so the aircrew and passenger priority is surviving and evacuating the aircraft. See Figure 10. [Enclosure 9]

WARNING

Because of the lack of information relative to the expected damage in a ditching situation and the difficulty expected in extracting survival equipment following the ditch, the primary concern of aircrew and passengers should be that of surviving the ditch and immediate evacuation of the aircraft.

Figure 10 – Warning provided in C-2A NATOPS, reference (b)

154. One minute after initially declaring an emergency, PW 33 stated to Marshal, "Password 33 is going in the water," and PW 30 observed the aircraft in the water 18 seconds later. [Enclosure 50]

Opinions

1. PW 30 aircrew's immediate response in getting to the impact location and initial coordination of rescue efforts was instrumental in allowing rescue helicopters to locate the survivors and wreckage within six minutes. [FF 46, 48, 66-70]

2. The SAR efforts conducted by multiple U.S. Navy and JMSDF ships and aircraft were swift and thorough. The speed of response was an important factor in the successful rescue and

medical treatment of the eight Sailors observed in the water, including two without operational flotation gear. [FF 57, 58, 66-79, 85,86, 90, 92]

3. In light of the SAR assets' thorough search of the area, the fact that none of the Sailors rescued from PW 33 recall seeing LT Combs, ABEAN Chialastri, or AOAA Grosso in the water, and their location in the aircraft, it is unlikely that these three shipmates were able to escape the aircraft. SAR efforts were not a causal factor in the loss of LT Combs, ABEAN Chialastri, or AOAA Grosso. [FF 26, 50, 51, 61-65, 66-71, 80-89, 91, 93]

4. Some of the major structural damage shown in images of the submerged PW 33 may have occurred during the initial emergency, by impact with the water, or while the aircraft sank to the ocean floor. The damage is consistent with the fastest modeled flooding rates provided to the investigation, and would have rapidly submerged the cockpit ditching hatches, with the aft ditching hatches submerging soon thereafter. Once each ditching hatch submerged, the inflow of water through that hatch would have made immediate egress through it nearly impossible. [FF 50-56, 60, 61-65]

5. Although not abnormal under the circumstances, the rapid rate at which the cockpit and cabin filled with water after impact made successful egress of all passengers and aircrew extremely challenging and was likely a causal factor in the loss of the three Sailors. This underscores the value of SEBD in improving the chance for survival of aircrew and passengers aboard helicopter, tiltrotor, E-2, and C-2 aircraft in overwater flights. [FF 24, 25, 61-65]

6. The AMCI and MPA results for VRC 30 DET 5 prior to the loss of PW 33 all indicate a very strong maintenance program that was assessed as safe for flight with scores at or above fleet average. All evidence indicates aircraft maintenance conducted on PW 33 as of 22 November 2017 was current and handled in accordance with Naval Aviation Maintenance Program procedures. There is no evidence of criminal negligence or malicious intent on the part of VRC-30 DET 5 maintenance technicians or that aircraft maintenance conducted on PW 33 was a causal factor in the emergency. [FF 1, 2, 31, 98-115]

7. The February 2018 AMCI and MPA, conducted three months post-mishap, indicate VRC 30, DET 5 needs to refocus on training and maintenance. While a grade of "off track" or "fail" is always cause for concern, the CMPAT's assessment that VRC 30 DET 5 was capable of addressing its deficiencies internally and their overall confidence in the effectiveness of the maintenance program indicates that CMPAT did not harbor significant concerns about the efficacy of VRC 30, DET 5's maintenance program following the loss of PW 33. [FF 116-119]

8. The cargo carried onboard PW 33 was not explosive in nature and was properly secured. There is no evidence that cargo was a causal factor in the emergency. [FF 120-122]

9. The unavailability of post-incident fuel samples from PW 33 makes it impossible to rule out fuel as a causal factor with absolute certainty. However, pre-incident fuel samples taken from PW 33, the results of fuel analysis from the trucks used to refuel PW 33, and fuel samples taken

from PW 30 aboard RONALD REAGAN after the incident indicate fuel was not likely a causal factor in the emergency. [FF 32, 33, 123-128]

10. There is no evidence that weather or environmental conditions experienced by PW 33, to include clouds, precipitation, icing, visibility, winds, birds, sea state, and water temperatures, were causal factors in the emergency. [FF 129-134]

11. Aircrew of PW 33 conducted flight planning, briefings, and procedures in accordance with NATOPS. There is no evidence that the right engine emergency was a result of fault or negligence of the aircrew. [FF 3, 6-17, 18-23, 27-30, 34, 42]

12. The actual mechanical or material failure that caused the emergency on PW 33 is unknown at this time. Further information regarding possible causal factors in this emergency may be available from the recovery or continued examination of PW 33. [FF 41-43, 136-140, 94-97]

13. Absent externally visible damage to the left engine, it is impossible to determine what may have caused a mechanical or material failure to that engine. The inability of the aircrew to airstart the left engine after two attempts might indicate an internal failure that warrants further investigation if PW 33 is recovered. [FF 96, 142-145]

14. The right engine chip light and severe damage visible to the right engine indicate that there was a major failure to that engine, which might have been the sole or primary cause of the noise heard and vibrations felt by those aboard PW 33. [FF 96]

15. Given their low altitude at the time of the emergency, and the extreme vibrations that made the engine instruments almost impossible to read, the pilot and co-pilot had limited time and minimal information available to assess the cause of the emergency and respond. Even if there was no mechanical or material failure in the left engine, the pilot and co-pilot responded reasonably and in accordance with their training. [FF 38, 41-45, 135-149]

16. Once significant torque was lost from both engines, the aircraft commander and co-pilot assessed that a ditch was required and acted quickly within the limited time available to maintain control of the aircraft and maximize the survivability of impact with the water. Their actions were critical in enabling eight Sailors to survive the ditching. [FF 141-149, 154]

17. Executing a ditch of a C-2A at sea is challenging and has not been executed since 1973. The numerous dual-engine failure and ditching drills incorporated in C-2A training improved the ability of the aircraft commander and co-pilot to successfully execute this ditch. [FF 4, 5, 135, 136]

18. The crewmen of PW 33 proactively engaged with the aircraft commander during the emergency, identifying the need to alert passengers and to remove overhead ditching hatches in preparation for ditching. Additionally, the crewmen's action in the cabin after impact were essential to the safe egress and rescue of five passengers. Without their sound judgement and

professionalism under extreme pressure, it is unlikely there would have been as many survivors. [FF 47, 57-59, 150-154]

Recommendations

1. Three minutes and 49 seconds elapsed from the first airborne indications of a problem until PW 33 was completely submerged in the open ocean. During this short period of time the aircrew prepared the passengers for impact, affected a ditch, and enabled the egress of eight of the eleven personnel onboard. Their actions are a testament to their training and courage, and are worthy of recognition.

2. All survivors from PW 33 were rescued and onboard RONALD REAGAN within 51 minutes of impact. The professional actions of PW 30, other airborne CVW-5 aircraft, and RONALD REAGAN are a testament to their training and are worthy of recognition. Additionally, the support of JMSDF and CTF-72 in SAR efforts was extensive and is worthy of recognition.

3. Despite the low number of C-2 engine failures and ditches, aircrew should continue to regularly train to these types of emergencies and incorporate lessons learned from this incident into all future aircrew and passenger briefings.

4. Based on the rapid flooding rate and challenges to egress experienced by the passengers aboard PW 33, recommend NAVAIR examine the feasibility of designing and implementing SEBD training for passengers. This would allow for the provision of portable emergency air egress bottles to all passengers on helicopter, tiltrotor, E-2, and C-2 aircraft similar to the HABD issued to C-2 aircrew and the SEBD/HASP issued to most passengers onboard U.S. Marine Corps tilt-rotor (V-22) overwater flights.

5. Recommend no punitive or administrative action be taken against the aircrew of PW 33 or VRC 30 DET 5 maintenance personnel.

6. If further information becomes available through the recovery or exploration of PW 33 or from a final fuel analysis by NAVAIR that alters the findings, opinions, or recommendations of this report, recommend convening a supplemental investigation to consider the impact of that information on the findings of this report.

(b) (3) (A), (b) (6)

DEPARTMENT OF THE NAVY
COMMANDER BATTLE FORCE SEVENTH FLEET
COMMANDER CARRIER STRIKE GROUP FIVE
FPO AP 96602

5830
Ser N00/418
27 Nov 17

From: Commander, Carrier Strike Group FIVE
To: CAPT (b) (3) (A), (b) (6) USN

Subj: COMMAND INVESTIGATION OF THE INCIDENT INVOLVING THE INBOUND FLIGHT OF A C-2 TO USS RONALD REAGAN (CVN 76) ON 22 NOVEMBER 2017

Ref: (a) JAGMAN, Chapter II

1. This appoints you, per reference (a), to inquire into the facts and circumstances surrounding the incident on 22 November 2017 involving an inbound C-2 to USS RONALD REAGAN (CVN 76). CDR (b) (3) (A), (b) (6) and CDR (b) (3) (A), (b) (6) are appointed to assist you.

2. Investigate the facts and circumstances of the incident, including causes, injuries and damages, and any fault, neglect, or responsibility therefore, and recommend appropriate administrative or disciplinary action. Report your findings of fact, opinions, and recommendations in letter form by 5 January 2018, unless an extension of time is granted. If you have not previously done so, read reference (a) in its entirety before beginning your investigation.

3. You may seek legal advice from my Deputy Staff Judge Advocate, LT (b) (3) (A), (b) , JAGC, USN, during the course of your investigation. She can be reached at DSN: (b) (3) (A), (b) , or via email at (b) (3) (A), (b) @ctf70.navy.mil.

(b) (3) (A), (b) (6)

Copy to:
CDR (b) (3) (A), (b) (6)
CDR (b) (3) (A), (b) (6)
LT (b) (3) (A), (b) (6)

5830
3 Jan 18

From: CAPT (b) (3) (A), (b) (6) USN
To: Commander, Carrier Strike Group FIVE

Subj: REQUEST FOR EXTENSION IN COMPLETION OF COMMAND INVESTIGATION OF THE INCIDENT INVOLVING THE INBOUND FLIGHT OF A C-2 TO USS RONALD REAGAN (CVN 76) ON 22 NOVEMBER 2017

Ref: (a) CCSG5 ltr of 27 Nov 17

1. Per reference (a), I am respectfully requesting an extension for the completion of the subject report until 9 February 2018.

2. If granted, this extension would allow me to receive additional materials already requested but pending release. It would also provide time to assess the feasibility of obtaining additional information from the aircraft, which was located on 30 December 2017.

(b) (3) (A), (b) (6)

DEPARTMENT OF THE NAVY
COMMANDER BATTLE FORCE SEVENTH FLEET
COMMANDER CARRIER STRIKE GROUP FIVE
FPO AP 96602

5830
Ser N00/ 595
4 Jan 18

From: Commander, Carrier Strike Group FIVE
To: CAPT (b) (3) (A), (b) (6) USN

Subj: REQUEST FOR EXTENSION IN COMPLETION OF COMMAND INVESTIGATION OF THE INCIDENT INVOLVING THE INBOUND FLIGHT OF A C-2 TO USS RONALD REAGAN (CVN 76) ON 22 NOVEMBER 2017

Ref: (a) JAGINST 5800.7F
(b) COMCARSTRKGRU FIVE ltr 5830 Ser N00/418 of 27 Nov 17
(c) CAPT (b) (3) (A), (b) (6) ltr of 3 Jan 18

1. Your request for an extension in the above named matter is approved. Report your findings to me no later than 9 February 2018.

2. My point of contact on this matter is my Staff Judge Advocate, LCDR (b) (3) (A), (b) (6) JAGC, USN. She can be reached at DSN: (b) (3) (A), (b) (6)

(b) (3) (A), (b) (6)

5830
8 Feb 18

From: CAPT (b) (3) (A), (b) (6) USN
To: Commander, Carrier Strike Group FIVE

Subj: REQUEST FOR SECOND EXTENSION IN COMPLETION OF COMMAND INVESTIGATION OF THE INCIDENT INVOLVING THE INBOUND FLIGHT OF A C-2 TO USS RONALD REAGAN (CVN 76) ON 22 NOVEMBER 2017

Ref: (a) COMCARSTRKGRU FIVE ltr 5830 Ser N00/418 of 27 Nov 17
(b) COMCARSTRKGRU FIVE ltr 5830 Ser N00/595 of 4 Jan 18

1. Per references (a) and (b), I am respectfully requesting an extension for completing the subject report until 16 March 2018.

2. If granted, this extension would allow time to receive additional materials already requested but pending analysis and release. Additionally, it will allow time for a better assessment of a timeline regarding Password 33 wreckage recovery and a determination of what additional information might become available.

(b) (3) (A), (b) (6)

DEPARTMENT OF THE NAVY
COMMANDER BATTLE FORCE SEVENTH FLEET
COMMANDER CARRIER STRIKE GROUP FIVE
FPO AP 96602

5830
Ser N00/118
9 Feb 18

From: Commander, Carrier Strike Group FIVE
To: CAPT [redacted] (b) (3) (A), (b) (6) USN

Subj: REQUEST FOR SECOND EXTENSION IN COMPLETION OF COMMAND INVESTIGATION OF THE INCIDENT INVOLVING THE INBOUND FLIGHT OF A C-2 TO USS RONALD REAGAN (CVN 76) ON 22 NOVEMBER 2017

Ref: (a) CAPT Brett E. Crozier ltr of 8 Feb18

1. Your request in reference (a) for an extension in the above named matter is approved. Report your findings to me no later than 16 March 2018.

2. My point of contact on this matter is my Staff Judge Advocate, LCDR [redacted] (b) (3) (A), (b) (6) JAGC, USN. She can be reached at DSN: [redacted] (b) (3) (A), (b) (6) (b) (3) (A), (b) (6)

FOR OFFICIAL USE ONLY - PRIVACY SENSITIVE
Any misuse or unauthorized disclosure can result in both civil and criminal penalties

5830
14 Mar 18

From: CAPT (b) (3) (A), (b) (6) USN
To: Commander, Carrier Strike Group FIVE

Subj: REQUEST FOR THIRD EXTENSION IN COMPLETION OF COMMAND INVESTIGATION OF THE INCIDENT INVOLVING THE INBOUND FLIGHT OF A C-2 TO USS RONALD REAGAN (CVN 76) ON 22 NOVEMBER 2017

Ref: (a) COMCARSTRKGRU FIVE ltr 5830 Ser N00/418 of 27 Nov 17

1. Per reference (a), I am respectfully requesting an extension for completing the subject report until 16 April 2018.

2. If granted, this extension would allow me to receive additional materials already requested but pending analysis and release. (b) (3) (A), (b) (6)

DEPARTMENT OF THE NAVY
COMMANDER BATTLE FORCE SEVENTH FLEET
COMMANDER CARRIER STRIKE GROUP FIVE
FPO AP 96602

5830
Ser N00/120
20 Mar 18

From: Commander, Carrier Strike Group FIVE
To: CAPT (b) (3) (A), (b) (6) USN

Subj: REQUEST FOR THIRD EXTENSION IN COMPLETION OF COMMAND INVESTIGATION OF THE INCIDENT INVOLVING THE INBOUND FLIGHT OF A C-2 TO USS RONALD REAGAN (CVN 76) ON 22 NOVEMBER 2017

Ref: (a) CAPT (b) (3) (A), (b) (6) ltr of 14 Mar18

1. Your request in reference (a) for an extension in the above named matter is approved. Report your findings to me no later than 16 April 2018.

2. My point of contact on this matter is my Staff Judge Advocate, LCDR (b) (3) (A), (b) (6) JAGC, USN. She can be reached at DSN: (b) (3) (A), (b) (6)
(b) (3) (A), (b) (6)

5830
12 Jan 18

MEMORANDUM FOR THE RECORD

From: CAPT (b) (3) (A), (b) (6) [redacted] USN

Subj: SUMMARY OF INTERVIEW OF LCDR (b) (3) (A), (b) (6) [redacted] USN, ON 30 NOVEMBER 2017

1. The following is a summary of my interview with LCDR (b) (3) (A), (b) (6) [redacted] USN, on 30 November 2017 onboard Naval Air Facility Atsugi. LCDR (b) (3) (A), (b) (6) [redacted] was the aircraft commander of the mishap aircraft, PW 33.

2. The interview addressed the incident that occurred on 22 November 2017. LCDR (b) (3) (A), (b) (6) [redacted] provided the following description of events in chronological order.

a. On 21 November 2017, flight planning determined that the calculated distance from Iwakuni to RONALD REAGAN required refueling in Kadena Air Force Base (AFB). The two C-2A aircraft in VRC 30 DET 5 (PW 30 and PW 33) would arrive to RONALD REAGAN (CVN76) with enough fuel for seven attempts at landing.

b. The maximum range for a carrier on-board delivery aircraft (COD) to ship is 400 miles, which was the approximately planned distance from Kadena AFB to RONALD REAGAN. It is not unusual to stop for fuel and this was a typical COD mission in the SEVENTH FLEET area of operations.

c. Fuel samples were taken from PW 33 on 22 November 2017 at 0600. LCDR (b) (3) (A), (b) (6) [redacted] is QA Ops and is always in on scene for samples, making sure everything is done correctly.

d. VRC 30 DET 5 keeps electronic and paper Aircraft Discrepancy Books (ADB). LCDR (b) (3) (A), (b) (6) [redacted] thinks he paper signed in Marine Corps Air Station (MCAS) Iwakuni before take-off. PW 33 did not fly with the ADB, just the flight packet.

e. PW 33 took three passengers from PW 30 to make the two CODs equal weight. The seats were already set up in PW 33.

f. LCDR (b) (3) (A), (b) (6) [redacted] filed for a weather brief from MCAS Iwakuni to Kadena AFB and Kadena AFB to RONALD REAGAN. LCDR (b) (3) (A), (b) (6) [redacted] provided a combined brief to the pilots of both PW 33 and PW 30 at approximately 0700 on 22 November 2017 as the aircraft would be executing the same mission.

g. The flight to Kadena AFB was through a storm and required IFR throughout. Due to the inclement weather, the pilots flew a maximum range profile. PW 33 and PW 30 flew at an altitude of approximately 8,000ft due to icing. When the aircraft landed at Kadena AFB, the weather was worse than expected.

h. PW 33 had approximately 4,000lbs of fuel on arrival to Kadena AFB, refueled another 8,000lbs at Kadena AFB. Trucks were passing, including refueling a C-130 nearby. The SDO at NAF Atsugi called three times for fuel delivery at Kadena AFB. LCDR (b) (3) (A), (b) (6) assessed that getting a fuel truck took an unusually long time for a U.S. Air Force base.

i. The PW 30 aircraft commander and LCDR (b) (3) (A), (b) (6) went by truck to the Operations Office at Kadena AFB and received an updated weather brief, leaving the PW 33 and PW 30 co-pilots with the two aircraft. The weather brief anticipated the storm currently over Kadena AFB would follow the aircraft toward RONALD REAGAN, but the report from RONALD REAGAN was that the weather was beautiful.

j. The aircraft commanders returned to the aircraft as the fuel truck was arriving at around 1200. LDCR Chase briefed the crew that there were no changes from the morning brief and that without a tailwind, the flight would be two hours and with a tailwind it would be an hour and 45 minutes.

k. PW 33 launched from Kadena AFB, climbed first to 17,500 feet and then to 23,500 thousand feet. There was a tailwind and beautiful weather. PW 30 followed by about 5 minutes. The flight was about 385 miles and fuel burn was normal with a maximum range profile to arrive to RONALD REAGAN with 1500lbs of fuel. There were no fluctuations or abnormal noises.

l. LT Combs had flown from MCAS Iwakuni to Kadena AFB, for which the weather had been bad. LCDR Chase took off from Kadena AFB. Since the weather was beautiful, they switched for the last 45 minutes so that LT Combs could fly in the good weather.

m. About 150nm from RONALD REAGAN, LCDR (b) (3) (A), (b) (6) began to gear up and checked in for approach. PW 30 was still approximately 20nm behind, so PW 33 throttled back to shorten the time between landings on RONALD REAGAN. PW 33 started descent at 60nm and at 50nm checked in with Marshal. At 20nm, PW 30 came over the radio and said Marshal was looking for PW33; PW 33 was at 280kts/ground.

n. At about 16nm from RONALD REAGAN and about 1,200ft, the aircrew began to prepare passengers for landing. PW 33 checked in with Marshal to give a load report. Midway through the load report, there was a loud bang. Smoke entered the cockpit immediately. Everything was shaking, "like a computer monitor you are trying to read but someone is shaking it."

o. LT Combs pulled up to gain altitude. LCDR (b) (3) (A), (b) (6) estimates PW 33 probably did not reach 1,500ft. LT Combs said "It's the left engine," and LCDR (b) (3) (A), (b) (6) said "Ok, we need to get rid of it." There were no other indications on left vs. right and LCDR (b) (3) (A), (b) (6) did not explicitly ask, "why the left?" LCDR (b) (3) (A), (b) (6) said "I'm going to pull the left T handle," and did; this produced momentary relief. The pilots feathered to prevent the aircraft from yawing. LCDR (b) (3) (A), (b) (6) put the flaps to 10 and maximum rudder to 20, but there was no reprieve.

p. As the left engine was shutting down, the right engine chip light came on, indicating metal in the right engine oil system and that the right engine was suffering from sudden extreme wear internally (vice a flight controls issue).

q. LCDR (b) (3) (A), (b) (6) attempted to air start the left engine in order to be able to shut down the right engine. The air start did not work. PW 33 was traveling at about 180kts. LCDR (b) (3) (A), (b) (6) attempted to air start again, but it did not work. PW 33 was at approximately 500ft. LCDR (b) (3) (A), (b) (6) said "We have to put it down."

r. When the air crew in the cabin heard this over their headsets, they said "ditching hatches, sir," and LCDR (b) (3) (A), (b) (6) replied "yes." He was slapping flaps down to 30, yelled "harnesses," fastened his own harness, and then pulled back on the yoke with LT Combs for the landing. They never got to open the overhead ditching hatches in the cockpit.

s. PW 33 just cleared a swell and hit the water. There was violent water over the whole aircraft. They hit at about 110 knots, with no time to set up a best-ditch scenario. PW 33 pitched up and LCDR (b) (3) (A), (b) (6) felt weightless and was shocked to see light. There was violent motion for 3 to 5 seconds.

t. The cockpit was filling with water immediately through the ditching hatch above his head, which LCDR (b) (3) (A), (b) (6) believes popped open during impact. LCDR (b) (3) (A), (b) (6) unbuckled, reached up, and the water pushed him up and out. LCDR (b) (3) (A), (b) (6) believes LT Combs never took his hands off the yoke because he was trying to maintain control of the aircraft.

u. LCDR (b) (3) (A), (b) (6) got out, rolled over, and saw people climbing out of PW 33. He assumed that LT Combs would be one of these people. By the time he was out, the engines and nose were submerged and just the back halves of the wings were up. The tail was roughly 6-8 feet in the air, which allowed people in the back to get out.

v. LCDR (b) (3) (A), (b) (6) was screaming for people in the water to get away from the plane so they would not be sucked under when the plane fully submerged. The tail was out for 20-30 seconds and then slipped under the water, bubbling some. He was treading water in 10ft waves for 30-60 seconds and then attempted to inflate his gear, but it popped and he lost faith in the gear. He grabbed his seat pan, which was within feet and floats. He saw AWF3 (b) (3) (A), (b) (6) huddled with 2-3 other people about 30 yards away and screamed for help because he could not inflate his gear.

w. LCDR (b) (3) (A), (b) (6) and AWF3 (b) (3) (A), (b) (6) thought they saw LT Combs's jacket floating in the water and assumed he was out of the aircraft. AWF3 (b) (3) (A), (b) (6) huddled with 2-3 other people and helped keep LCDR (b) (3) (A), (b) (6) afloat. They took his helmet off because it was filling with water. By then there were helicopters overhead.

x. LCDR (b) (3) (A), (b) (6) believes he spent about 10 minutes in the water. The rescue swimmer pulled him up first because he had no flotation gear.

4. LCDR (b) (3) (A), (b) (6) made additional statements providing context for the incident on 22 November 2017:

a. LCDR (b) (3) (A), (b) (6) had never felt anything like the shaking; immediate and violent onset.

b. The fuel samples taken from PW 30 onboard RONALD REAGAN looked like they had petroleum jelly in them and the fuel itself was cloudy.

c. LCDR (b) (3) (A), (b) (6) wished he had had more time to correct the issue; 60 seconds was not enough to get the engine restarted. He is not sure if a turbine blew or if the right engine blew out the left engine with a fuel transfer issue.

d. LCDR (b) (3) (A), (b) (6) had been an instructor and so had done hundreds of ditching practices. In May and August 2017, he had run many with LT Combs in the right seat.

e. Usually for C-2 training, ditching scenarios are run at 9,500 feet, with simulated dual engine failure. LCDR (b) (3) (A), (b) (6) has never had dual engine failure and is not sure why it is the standard practice, but is glad they train to it.

f. During training flights, C-2A aircrew attempt engine relay down to 1,500 feet. Below 1,500 feet, aircrew prepare the aircraft for ditching and attempt to maintain wings level, minimal VSI, and minimal forward airspeed.

g. LCDR (b) (3) (A), (b) (6) flight gear is locked onboard RONALD REAGAN. It did not blow on the seam, which means there is not a local maintenance issue.

h. LCDR (b) (3) (A), (b) (6) did not see any birds as PW 33 approached RONALD REAGAN.

i. LT Combs was Aircraft Commander qualified, approaching his 1000th hour in the COD, which is unusually high for a LT.

j. Until the incident, it was a very normal flight. There were no lights or abnormal indications, no abnormal engine maintenance.

(b) (3) (A), (b) (6)

5830
24 Jan 18

MEMORANDUM FOR THE RECORD

From: CDR (b) (3) (A), (b) (6) [redacted] USN

Subj: SUMMARY OF THE C-2A FLEET AND PASSWORD 33'S AIRCRAFT DISCREPANCY BOOK REVIEW

1. This statement is submitted in support of the command investigation into the loss of Flight Logistics Support Squadron (VRC) 30, Detachment 5 aircraft Password 33 (PW 33), a C-2A aircraft that experienced a mishap on 22 November 2017.

2. In preparing this statement, I have reviewed the maintenance records for VRC 30 Detachment 5 PW 33, called the Aircraft Discrepancy Book (ADB). I have also reviewed statistical data on the C-2A fleet provided by Carrier Air Wing FIVE Operations Department. In interpreting this data, I have relied on my 17 years of experience as a Naval Aviator, including serving as a Squadron Maintenance Officer.

3. I have been qualified as E-2C Hawkeye Aircraft Commander since 2001, and a C-2 Greyhound Carrier Transport Third Pilot in 2003, accruing over 4,500 hours of total military flight time in six different aircraft types. The E-2C Hawkeye and the C-2 Greyhound possess similar flight characteristics and share many of the same normal and emergency procedures. Both aircraft are served by the same Type Wing Commander and train all their replacement pilots at the same squadron.

4. My current position is the USS RONALD REAGAN (CVN 76) Air Officer. 5In previous positions, I served as the Commanding Officer of Training Squadron TWO EIGHT, the Maintenance Officer and Safety Officer of Carrier Airborne Early Warning Squadron ONE ONE FIVE and am a graduate of the USN's Aviation Safety Officer Course.

6. Maintenance for any aircraft requires attention to major maintenance and inspection timelines, as well as attention to and repair of even minor issues. A seemingly minor discrepancy, such as a burnt our light bulb, can become a major safety hazard once the aircraft is airborne.

7. The fleet of C-2A aircraft have an average age of 30.41 years and all undergone a Service Life Extension Program from 2004 to 2011. Due to the nature of their carrier onboard delivery (COD) mission, they fly frequently while supporting forward deployed naval forces, with the average C-2A airframe having 10,210 hours.

8. The average hours of a C-2A engine is 9, 064, however the limit for C-2 engines is based on efficiency with less than 95% efficiency triggering tests and repairs.

9. PW 33's ADB documents 51 aircraft discrepancies over the ten flights preceding the mishap flight on 22 November 2017. It shows all 51 maintenance requirements as having been properly documented with no outstanding downing discrepancies prior to the 22 November 2017 flight.

10. This number of maintenance actions is not unusual for a C-2A aircraft serving as a COD. Many of these maintenance requirements were minor issues, such as corrosion repair which would not have affected airworthiness.

11. PW33's ADB was in good order and typical of many in the C-2 fleet. Its condition showed VRC 30, Detachment 5 had assiduous maintenance practice and focus on procedural compliance.

(b) (3) (A), (b) (6) [redacted]

5830
18 Jan 18

MEMORANDUM FOR THE RECORD

From: CAPT (b) (3) (A), (b) (6) USN

Subj: SUMMARY OF INTERVIEW OF LT (b) (3) (A), (b) (6) USN, ON 30 NOVEMBER 2017

1. The following is a summary of my interview with LT (b) (3) (A), (b) (6) USN, on 30 November 2017 onboard Naval Air Facility Atsugi.

2. LT (b) (3) (A), (b) is a pilot assigned to Fleet Logistics Support Squadron (VRC) 30, Detachment 5. She regularly flies both aircraft assigned to DET 5, Password (PW) 30 and PW 33. LT (b) (3) (A), (b) stated she has flown PW 33 many times. PW 33 always has some technical or mechanical issue (e.g. IFF, bleed air, weather radar), but she did not recall any issues with the engines.

3. The interview addressed the incident that occurred on 22 November 2017. LT (b) (3) (A), (b) provided the following description of events in chronological order.

a. On 22 November 2017, LT (b) (3) (A), (b) woke up at 0600. PW 30 and PW 33 briefed together at 0700 and LT (b) (3) (A), (b) arrived about 15 minutes beforehand. LT (b) (3) (A), (b) was the aircraft commander for PW 30. Both aircraft were scheduled to fly from Marine Corps Air Station (MCAS) Iwakuni to Kadena Air Force Base (AFB) for refueling, and onward to USS RONALD REAGAN (CVN 76).

b. The aircraft commanders moved passengers from PW 30 to PW 33 for weight and fuel purposes, and so they had NATOPs open that morning. Going directly from Iwakuni to RONALD REAGAN was not an option because the upper limit for C-2A flights is 400nm and it was 410 to Iwo To and 420 to RONALD REAGAN. PW 33 and PW 30 had been in a time crunch to make it to RONALD REAGAN mid-cycle, but worked with RONALD REAGAN to adjust their timing for arrival.

c. In Iwakuni, the aircrew completed paper "A sheets" because the AZs had packed down the computer for electronic logging. Everything was completed in hard copy and ready for launch from MCAS Iwakuni to Kadena AFB. There was inclement weather en route , but it was not so bad as to pose a hazard to flying. They have landed in much worse sea state.

d. .At Kadena AFB, there were delays getting fuel. Kadena AFB can be a pain so they had planned one and half hours there, but arrived a little late because of the weather between MCAS Iwakuni and Kadena AFB. LT (b) (3) (A), (b) and LCDR (b) (3) (A), (b) used the delay to travel to Base Operations and re-do pre-flight planning for the flight to RONALD REAGAN. When they returned from Base Ops, they saw the fuel truck plugging in and nothing seemed abnormal. Each aircraft took about 8,000lbs of fuel to make full. At Kadena AFB, the aircrew would not normally see a fuel sample.

e. LT (b) (3) (A), (b) [redacted] has flown the C-2 enough that she is comfortable with the vibrations of the plane and the nuances of the aircraft. There was nothing uncomfortable with the flights on 22 November 2017.

f. During the flight, LT (b) (3) (A), (b) [redacted] experienced normal fuel burn on a maximum range profile. There were no issues with PW 30. PW 33 and PW 30 were comparing fuel and instruments the entire flight with no issues on either aircraft.

g. At 50nm from RONALD REAGAN, PW 30 began its descent from 23,500ft. At 25nm from RONALD REAGAN, PW 33 began slowing down and shared its location with PW 30 to deconflict altitude.

h. Both PW 33 and PW 30 were up with Marshal. PW 30 gave their load report to Marshal, who asked for PW 33 (who had already switched over to Tower). PW 30 alerted PW 33, who switched over and began providing the load report. Halfway through, PW 33 stopped. Marshal said "Say again load report," and PW 33 responded "dual engine failure."

i. PW 30 was approximately 25nm from RONALD REAGAN and LT (b) (3) (A), (b) [redacted] accelerated PW 30 to get to PW 33 as quickly as possible. After approximately 8nm, LT (b) (3) (A), (b) [redacted] saw a very high splash that she could not process fully. Within 30 seconds, the water was normal and she could see the aircraft at an angle with the painted stabs above the water. LT (b) (3) (A), (b) [redacted] started a communications log in accordance with training of on-scene commanders.

j. The wings were intact, and LT (b) (3) (A), (b) [redacted] saw smoke or spray very high above the aircraft. There was no trail of smoke into the water. LT (b) (3) (A), (b) [redacted] maintained left hand circles overhead, helping get the helicopters on site. LT (b) (3) (A), (b) [redacted] estimates it was approximately 80 seconds from when PW 33 said "dual engine failure" until PW 30 could see the aircraft in the water. Within three turns around the crash site, she could not see the plane at all.

k. RONALD REAGAN Air Boss said "Helicopters are on site." LT (b) (3) (A), (b) [redacted] asked "What can I do?" and Air Boss replied "PW 30, let me know when you are ready to come in." As soon as LT (b) (3) (A), (b) [redacted] landed PW 30 aboard RONALD REAGAN, folded the wings, and shut the engine down, she and co-pilot LT (b) (3) (A), (b) (6) [redacted] were escorted into a separate room in the Tower to talk to the RONALD REAGAN Executive Officer and medical personnel.

(b) (3) (A), (b) (6)
[redacted]

5830
12 Jan 18

MEMORANDUM FOR THE RECORD

From: CAPT (b) (3) (A), (b) (6) USN

Subj: SUMMARY OF INTERVIEW OF AW2 (b) (3) (A), (b) (6) USN, ON 30 NOVEMBER 2017

1. The following is a summary of my interview with AW2 (b) (3) (A), (b) (6) USN, on 30 November 2017 onboard Naval Air Facility Atsugi.

2. The interview addressed the incident that occurred on 22 November 2017. AW2 (b) (3) (A), (b) (6) provided the following description of events in chronological order.

a. AW2 (b) (3) (A), (b) (6) is part of VRC 30 DET 5 and was assigned to the aircrew for PW 33 on 22 November 2017, flying from Marine Corps Air Station (MCAS) Iwakuni to Kadena Air Force Base (AFB) to USS RONALD REAGAN (CVN 76). That morning, he saw the passengers and provided their flight gear. AW3 (b) (3) (A), (b) (6) provided the standard NATOPs brief covering egress, cranials, horse collar, catapult and trap, what to do if the ramp would not open, and oxygen masks (where they are located and how to operate them). There were 7 passengers and all were alert and attentive during the brief.

b. The two and a half hour ride to Kadena AFB was a little bumpy but not out of the ordinary. At Kadena AFB, the passengers were trying to stay dry in the bad weather. The hatches leaked when it rained so one passenger (AO1 (b) (3) (A), (b) (6) moved seats at Kadena AFB. ABEAN Chialastri and AOAA Grosso were forward and starboard.

c. When they arrived at Kadena AFB, AW2 (b) (3) (A), (b) (6) left for a cigarette and returned. He saw a C-130 was getting fueled a few hundred yards away which then left to fuel a few other aircraft, and returned to PW 33. The big, dark green fuel truck arrived within 40 minutes of the aircraft arriving. It was operated by a U.S. Air Force fueler in a brown shirt and working uniform (BDU) pants. AW2 (b) (3) (A), (b) (6) did not see a fuel sample and reports the fueling process was normal.

d. It is not standard to rebrief passengers after a fuel stop unless there are new passengers, so AW2 (b) (3) (A), (b) (6) and AW3 (b) (3) (A), (b) (6) did not provide a brief but made sure all passengers were properly geared.

e. The weather had cleared substantially while the aircraft were at Kadena AFB and the rain had stopped. Take off was normal. It was one and half hours to RONALD REAGAN, which was a standard time frame in clear weather.

f. About 20 miles out from RONALD REAGAN, AWF2 (b) (3) (A), (b) (6) could hear over the headsets that link the cockpit and the air crew the pilots making approach announcements. Pilot

started the load report. Just before he got to "souls onboard," there was a bang, shaking and smoke. AW2 (b) (3) (A), (b) (6) has about 2,000 hours in C-2s and has never heard anything like that

g. AW2 (b) (3) (A), (b) (6) heard from the cockpit, "Left engine rolling back," that the pilots were pulling the T handle, that trying to air start, that nothing happened, and that the right engine was going. Both sides of the aircraft shook. Smoke filled the cabin almost immediately, and there was a weird smell, almost like clutch.

h. At about 500ft above the water, AW2 (b) (3) (A), (b) (6) called to the pilots, "Ditching hatches?" They said yes. AW3 (b) (3) (A), (b) (6) stowed the forward hatch and buckled in. AW2 (b) (3) (A), (b) (6) looked out the window and saw the water was too close to be able to stow the aft hatch after removing it. Over his headset, AW2 (b) (3) (A), (b) (6) heard "PW 33 is declaring emergency, going down, brace."

i. AW2 (b) (3) (A), (b) (6) started clipping into his harness and two seconds later (not even enough time to tighten his shoulder straps, they hit the water. AW2 (b) (3) (A), (b) (6) unclipped, removed the aft ditching hatch, and the water was already chest high. The water lifted him out. AW2 (b) (3) (A), (b) (6) was trapped briefly with his head under water because his boots caught in AW3 (b) (3) (A), (b) (6) gear, but his boots came off and he was freed.

j. AW2 (b) (3) (A), (b) (6) and AW3 (b) (3) (A), (b) (6) hoisted Senior Chief out of the aircraft and then a wave came over the top of the aircraft and knocked AW2 (b) (3) (A), (b) (6) into the water. About 15 seconds later, the aircraft went under. AW2 (b) (3) (A), (b) (6) is not sure where the water was entering the aircraft; he believes it could not have been through the forward hatch because the pilots in the third row and AN (b) (3) (A), (b) (6) were able to get out through the forward hatch. The two airmen who did not get out were closest to the cockpit and farthest from the ditching hatches. (b) (3) (A), (b) (6) does not know if they even made it out of their seats. He never saw them out of the plane.

k. AW2 (b) (3) (A), (b) (6) was not wearing any flotation gear at the time of the impact. He grouped three people together, tried to assess that they were ok, and talked about the search and rescue (SAR) process to keep everyone calm.

l. Within a few minutes the helicopters had arrived and the other C-2 was overhead. AW2 (b) (3) (A), (b) (6) clipped the AO1 first (injured) into the rescue harness, then the injured lieutenant then the uninjured lieutenant, then came up with the last SAR swimmer. The SAR helicopter circled the crash site to see if there was anyone else in the water. The aircrew asked how many people had been aboard and AW2 (b) (3) (A), (b) (6) replied "11 souls."

m. The helicopter aircrew said they had to return to get the injured personnel to medical. Immediately upon arrival, they were seen by medical and kept there for six to eight hours taking vitals.

n. It is remarkable that the pilots kept the plane from cartwheeling on impact, given the shape of the aircraft and the sea state. The impact was extremely violent, PW 33 seemed intact, with one rudder bottom gone.

o. PW 33 was submerged within 30 seconds of when AW2 (b) (3) (A), (b) (6) egressed.

p. AW2 (b) (3) (A), (b) (6) [redacted] could not assess which side had an issue, but assessed that it seemed like both sides. He said it was as though there were "a bowling ball in the intake, like rudder shakers times 1000." There was smoke immediately and AW2 (b) (3) (A), (b) (6) [redacted] is not sure where it came from. It had a very distinct smell, like burning hydraulic fluid or burning clutch. It was not a fuel smell. Based on the rate at which water entered the aircraft, AW2 (b) (3) (A), (b) (6) [redacted] guesses there was a sizeable hole in the fuselage.

q. AW2 (b) (3) (A), (b) (6) [redacted] did not see ABEAN Chialastri or AOAA Grosso coming out of PW 33 and does not know if they were even able to unclick their harnesses.

(b) (3) (A), (b) (6) [redacted]

5830
18 Jan 18

MEMORANDUM FOR THE RECORD

From: CAPT (b) (3) (A), (b) (6) USN

Subj: SUMMARY OF INTERVIEW OF AWF3 (b) (3) (A), (b) (6) USN 30 NOVEMBER 2017

1. The following is a summary of my interview with AWF3 (b) (3) (A), (b) (6) USN, on 30 November 2017 onboard Naval Air Facility Atsugi.

2. The interview addressed the incident that occurred on 22 November 2017. AWF3 (b) (3) (A), (b) (6) provided the following description of events in chronological order.

a. On 22 November 2017, AWF3 (b) (3) (A), (b) (6) was assigned to VRC 30 DET 5 and was part of the aircrew for PW 33 flying from Marines Corps Air Station (MCAS) Iwakuni to USS RONALD REAGAN (CVN 76), with a stop at Kadena Air Force Base (AFB) on the way to refuel.

b. Before launching from MCAS Iwakuni to Kadena AFB, AWF3 (b) (3) (A), (b) (6) gave the brief to passengers in at the edge of the ramp. All of the passengers were paying attention and everything seemed normal.

b. AWF3 (b) (3) (A), (b) (6) was with PW 33 the whole time at Kadena AFB and does not remember any of the passengers leaving. One passenger moved within PW 33 to avoid a drip from the forward hatch that occurs when cabin pressure changes.

c. At Kadena AFB, the aircraft waited longer than expected for fuel, between 30-45 minutes. When the U.S. Air Force refueler arrived, AWF1 (b) (3) (A), (b) (6) connected the hose to the aircraft.

d. The weather cleared while the aircraft were still at Kadena AFB. Taxi, takeoff, departure, and climb up were all normal for the flight to RONALD REAGAN. Nothing stands out; there were some pressurization issues but that was all normal.

e. AWF3 (b) (3) (A), (b) (6) heard normal communications between Strike and Marshal. During approach checks, AWF3 (b) (3) (A), (b) (6) made all passengers put their cranials on and confirmed they were belted. He checked reservoir and filters and everything was normal. Immediately after AWF3 (b) (3) (A), (b) (6) returned to his seat, the engine went.

f. AWF3 (b) (3) (A), (b) (6) turned to the passengers and saw a flash in the window. He does not remember which engine and only remembers a flash, not flames. Over the headset he heard the pilots talking through the issue and heard AWF2 (b) (3) (A), (b) (6) ask if this was a ditching situation. The pilot replied yes.

g. AWF3 (b) (3) (A), (b) (6) said to the passengers, "Get your shit on," and then went to remove the forward ditching hatch, which he stowed. During this, his headset, which was on a short cord, was pulled off of his head. When he went to get the second hatch, AWF3 (b) (3) (A), (b) (6) saw how close the aircraft was to the water and realized he needed to be in his seat.

h. AWF3 (b) (3) (A), (b) (6) did not notice any smoke until he sat down. There was a smell like hydraulic fluid burning. AWF3 (b) (3) (A), (b) (6) connected his waist belt but was not able to zip his gear or secure his shoulder straps before impact. He remembers being thrown forward. It was dark and the first thing AWF3 (b) (3) (A), (b) (6) remembers is AWF2 (b) (3) (A), (b) (6) cussing at the back hatch while working to remove it.

i. AWF3 (b) (3) (A), (b) (6) worked to remove the life raft but by that time, the water was shoulder height (AWF3 (b) (3) (A), (b) (6) tall) and AWF3 (b) (3) (A), (b) (6) was floating. Water seemed to be coming from the front of the aircraft. AW3 (b) (3) (A), (b) (6) does not remember water rising, just water being there suddenly.

j. AWF3 (b) (3) (A), (b) (6) could not remove the life raft and so worked with AWF2 (b) (3) (A), (b) (6) to assist senior chief out of the aircraft. He saw people exiting the other hatch. As they helped a senior chief out of the aircraft, PW 33 was almost vertical in the water. In a split second, AWF3 (b) (3) (A), (b) (6) lost sight of AWF2 (b) (3) (A), (b) (6) AWF3 (b) (3) (A), (b) (6) yelled to the senior chief to pull the beaded handles on his flotation gear. A junior Sailor asked AWF3 (b) (3) (A), (b) (6) for help with his beaded handles, and the Sailor's gear successfully inflated.

k, Part of the starboard rudder/stabilizer was overhead and AWF3 (b) (3) (A), (b) (6) had to help senior chief get away from it as it fell. No part of the aircraft forward of the flaps was above water. AWF3 (b) (3) (A), (b) (6) assessed that the waves were about 15ft high.

l. AWF3 (b) (3) (A), (b) (6) heard someone yelling and thought it was AWF2 (b) (3) (A), (b) (6) He swam over and realized it was LCDR (b) (3) (A), (b) (6) The two worked to try to inflate a one-man life raft from a seat pan but were not able to. AWF3 (b) (3) (A), (b) (6) huddled with LCDR (b) (3) (A), (b) (6) senior chief, and the junior Sailor. He tried to keep everyone calm, to keep LCDR (b) (3) (A), (b) (6) afloat since he did not have gear, and to keep senior chief's head above water in the waves.

m. The helicopters arrived overhead and AWF3 (b) (3) (A), (b) (6) provided the order in which people would go up: LCDR (b) (3) (A), (b) (6) who had no gear; senior chief who was panicking; the junior Sailor who was very calm, and then AWF3 (b) (3) (A), (b) (6) Every time the helicopter picked someone up, it would hover overhead and then send down for the next person. While waiting, AWF3 (b) (3) (A), (b) (6) saw a helmet and was not sure if it was LCDR (b) (3) (A), (b) (6) so he swam to it. He recognized it as LCDR (b) (3) (A), (b) (6)

n. A rescue swimmer came down for AWF3 (b) (3) (A), (b) (6) and hoisted him into the helicopter. While the helicopter was hovering, a crewman asked how many souls were aboard PW 33. AWF3 (b) (3) (A), (b) (6) replied "11 souls." The two airmen were seated forward. They would have been underwater and AWF3 (b) (3) (A), (b) (6) is not sure if they got their harnesses undone.

o. There was nothing abnormal about the flight until the engine failure. It was a loud bang and violent shuddering like AWF3 (b) (3) (A), (b) (6) had never experienced before.

(b) (3) (A), (b) (6)

CLASS A FLIGHT MISHAPS
NAVY/MARINE
FLEET INCEPTION THROUGH 171122
C-2

YR	HOURS	MISHAPS	RATE
FY 67	3,581	0	.00
FY 68	11,951	0	.00
FY 69	17,487	0	.00
FY 70	4,084	1	24.49
FY 71	6,745	1	14.83
FY 72	3,951	3	75.93
FY 73	4,721	2	42.36
FY 74	3,945	2	50.70
JUL-DEC 74	2,137	2	93.59
CY 75	4,133	0	.00
CY 76	5,199	0	.00
CY 77	4,925	0	.00
CY 78	4,280	0	.00
CY 79	4,057	0	.00
JAN-SEP 80	3,342	0	.00
FY 81	4,179	0	.00
FY 82	4,534	0	.00
FY 83	5,159	0	.00
FY 84	5,570	0	.00
FY 85	6,426	0	.00
FY 86	8,640	0	.00
FY 87	12,962	0	.00
FY 88	13,703	1	7.30
FY 89	16,890	0	.00
FY 90	19,019	0	.00
FY 91	19,989	0	.00
FY 92	15,335	0	.00
FY 93	11,409	1	8.77
FY 94	11,810	0	.00
FY 95	11,198	0	.00
FY 96	9,435	0	.00
FY 97	10,263	0	.00
FY 98	11,916	0	.00
FY 99	10,188	0	.00
FY 00	10,669	0	.00
FY 01	11,746	0	.00
FY 02	12,746	0	.00
FY 03	10,362	1	9.65
FY 04	10,230	0	.00
FY 05	9,186	0	.00
FY 06	8,922	0	.00
FY 07	10,631	0	.00
FY 08	8,992	0	.00
FY 09	9,220	0	.00
FY 10	10,446	0	.00
FY 11	10,293	0	.00
FY 12	9,578	1	10.44
FY 13	8,713	0	.00
FY 14	9,058	0	.00
FY 15	8,313	0	.00
FY 16	8,980	0	.00
FY 17	8,130	0	.00
FY 18	1,168	0	.00
TOTAL	470,547	16	3.40

From: [redacted]
Sent: Thursday, April 12, 2018 2:01 PM
To: [redacted] IT1 USN, CTF 70
Cc: [redacted] LT USN, CTF 70
Subject: FW: (U) BLUF: PW 33 SAR SITREP - 23/1300Z NOV17 - ** New Updates**
Signed By: [redacted]

Very Respectfully,

LCDR [redacted]
CTF 70 Battle Watch Captain
Location: Fluckey Hall (CTF 74), CFA Yokosuka
E-mail: [redacted]
Yokosuka DSN: [redacted]
Yokosuka COMM: [redacted]

-----Original Message-----
From: CTF 70 BWC
Sent: Thursday, November 23, 2017 10:31 PM
To: [redacted] <[redacted]>; [redacted] <[redacted]>; [redacted] [redacted]
Cc: [redacted] RDML USN, CTF 70 <[redacted]>; [redacted] CAPT USN, CTF 70 <[redacted]>; [redacted] CAPT USN, CTF 70 <[redacted]>; [redacted] CAPT USN, USS RONALD REAGAN <[redacted]>; [redacted] CAPT USN, CVW-5 <[redacted]>; [redacted] CAPT USN, CVW-5 <[redacted]>; [redacted] CAPT USN, USS RONALD REAGAN <[redacted]>; [redacted] LCDR USN <[redacted]>; TAO <[redacted]>; CDS15 BZ [redacted]>; CTF 70 FTAO <[redacted]>; [redacted] CAPT USN, COMDESRON FIFTEEN <[redacted]>; [redacted] LT USN, CTF 70 <[redacted]>; CTF 72 BWC <[redacted]>; [redacted] <[redacted]>; [redacted] CAPT USN, CTF 70 <[redacted]>; [redacted] LCDR USN, CTF 70 <[redacted]>
Subject: (U) BLUF: PW 33 SAR SITREP - 23/1300Z NOV17 - ** New Updates**

UNCLASSIFIED

Classification: UNCLASSIFIED

BLUF: PW 33 SAR SITREP - 23/1300Z NOV17 - **Updates**

** New information designated with **

Situation

- At time 1446I, report of VRC-30 DET 5 A/C 33 experienced dual-engine loss and down in water
- At time 1449I, voice report to C7F made by CTF70 BWC
- Last known position reported at 1505I as 2125N 13513E
- 4 crew and 7 passengers
- 17 A/C diverted to Kadena, 1 A/C diverted to Iwo To
- 1455I RRN designated SAR Mission Coordinator by CTF 70
- RRN set RIVER CITY 1 time 1457I
- AEX knock it off called at 1459I
- VRC 30 DET 5 A/C 30 landed at 1500
- 1700I 17x A/C SOD Kadena
- A/C 603 SOD Iwakuni 2058I

Rescue
- A/C 610 returned 3 souls to RRN at 1525I
- A/C 622 returned 5 souls to RRN at 1534
- 8 souls returned to RRN as of 1534I and are being medically evaluated

**Search
- Type of Search: Surface Units conducting creeping line search. Air Units conducting sector searches as assigned by On-Scene Commander.
- **CTF 72 P-8 Fighting Tiger 891 checked off station
- JMSDF SMK and KGA responding by 1505I
- A/C 702 and 706 checked off station
- 1802I CHE assumes on-scene commander
- A/C 706 checked off station (RRN turned over OSC to CHE)
- Other assets: RRN and STE on-scene
- Assets employed in search: RRN, STE, CHE, MUS, KGA, SMK, 2x MH-60R (HMS-77), 1x MH-60R (HSM-51), 1X JMSDF HELO, JMSDF TERUZUKI, JMSDF ISE, JMSDF SAMIDARE, JSMDF KAGA, JMSDF SHIMAKAZE
- No RHIBs in the water
- ** Approximately 579 SQNM searched.

**HELO Search Status:
- DATUM Box: Second search complete
- Box 1/2 (CHE): Second search complete
- Box 3 (SMK): Second search complete
- Box 4: Second search complete
- Box 5: Second search complete
- Box 6 (MUS): Second search complete
- Box 7 (STE): Second search complete
- Box 8 (KGA): Second search complete
- Box 9 (SZN): Second search complete
- Box 10 (SMD): Second search complete
- Box 11 (TRZ): Second search complete
- Box 12 (TRZ): Second search complete
- Box 13: First search complete
- Box 14: First search complete
- Box 15: First search complete
- Box 16: First search complete
- **Box 17: First search in progress
- **Box 18: First search in progress
- Box 19: First search complete
- Box 20: First search complete

- Box 21: First search complete
- **Box 22: First search complete...
- **Box 23: First search in progress
- **Box 24: First search in progress
- **Box 26: First search in progress
- **Box 27: Second search complete
- **Box 28: Second search in progress
- **Box 29: Second search in progress
- **Box 30: First search in progress
- Box 32: Second search complete
- Box 33: Second search complete
- Box 34: Second search complete
- Box 38: First search in progress
- Box 39: Second search complete
- Box 40: Second search complete
- Box 41: Second search complete
- Box 46: Second search complete
- Box 47: Second search complete
- Box 48: Second search complete
- Box 49: Second search complete
- Box 50: Second search complete
- Box 54: First search in progress
- Box 55: Second search complete
- Box 56: First search complete

**SURFACE Search Status:
- DATUM Box (RRN): 100 percent complete
- Box 1/2 (CHE): 100 percent complete
- Box 3 (SMK): 100 percent complete
- Box 4 (ISE): 100 percent complete
- Box 5 (SMK): 100 percent complete
- Box 6 (MUS): 100 percent complete
- Box 7 (STE): 100 percent complete
- Box 8 (KGA): 100 percent complete
- Box 9 (SZN): 100 percent complete
- Box 10 (SMD): 100 percent complete
- Box 11 (TRZ): 100 percent complete
- Box 12 (TRZ): 100 percent complete
- Box 19 (CHE): 000 percent complete
- **Box 20 (CHE): 100 percent complete
- Box 21 (ISE): 100 percent complete
- Box 26 (MUS): 020 percent complete
- Box 27 (MUS): 040 percent complete
- **Box 32 (STE): search in progress
- **Box 33 (STE): 100 percent complete
- Box 34 (KGA): 050 percent complete
- **Box 40 (SZN): 086 percent complete
- Box 41 (KGA): 015 percent complete
- **Box 47 (TRZ): 100 percent complete
- **Box 48 (SMD): 100 percent complete
- **Box 49 (SMK): 100 percent complete
- Box 50 (KGA): 010 percent complete
- Box 51 (SMK): search in progress
- Box 52 (SMK): search in progress

- Box 57 (SMD): search in progress

Request for Support
- CTF 72:
(U) No Ready-2 support requested at this time.
(U) No additional JMSDF support requested at this time

- For C7F:
** (U) Request availability and range of rotary-wing logistics capability and capacity from NAF Atsugi 25 NOV - 03 DEC
** (U) Request availability and range of tiltrotor logistics capability and capacity from NAF Atsugi 25 NOV - 03 DEC
** (U) Request rotary wing flight ops from NAF Atsugi Sunday for 26 NOV and 03 DEC.
** (U) Request host nation notification of potential MV-22 operations from NAF Atsugi 25 NOV-03 DEC.
** (U) Request additional NALO lift from NAF Atsugi to MCAS Iwakuni 04-06 DEC. Contact CVW-5.
** (U) Request aircraft crane off planning and associated support.
** (U) JMSDF SAR units preserve all recovered debris and return to Japan. Notify CTF-70 BWC of recovered items.
(U) Request availability and ETA of US or partner ocean salvage capability to SAR datum location.

For C7F / NALE:
**No request needed at this time

Expect next update will be at 1600Z/0100I.
Very respectfully,
CHE TAO

LT [redacted] (b) (3) (A), (b) (6)
CTF 70 Battle Watch Captain
Embarked: USS Ronald Reagan
E-mail: [redacted] (b) (3) (A), (b) (6)
Underway DSN: [redacted] (b) (3) (A), (b) (6)
Underway COMM: [redacted] (b) (3) (A), (b) (6)
SIPR VOSIP [redacted] (b) (3) (A), (b) (6)
Yokosuka DSN: [redacted] (b) (3) (A), (b) (6)
Yokosuka COMM: [redacted] (b) (3) (A), (b) (6)
J-Dial: [redacted] (b) (3) (A)

Classification: UNCLASSIFIED
UNCLASSIFIED

5830
18 Jan 18

MEMORANDUM FOR THE RECORD

From: CAPT (b) (3) (A), (b) (6) USN

Subj: SUMMARY OF INTERVIEW OF AWF1 (b) (3) (A), (b) (6) USN, ON 30 NOVEMBER 2017

1. The following is a summary of my interview with AWF1 (b) (3) (A), (b) (6) USN, on 30 November 2017 onboard Naval Air Facility Atsugi. AWF1 (b) (3) (A), (b) (6) is assigned to Fleet Logistics Support Squadron (VRC) 30, Detachment 5.

2. The interview addressed the incident that occurred on 22 November 2017. AWF1 (b) (3) (A), (b) (6) provided the following description of events in chronological order.

a. On 22 November 2017, CPO (b) (3) (A), (b) (6) was aircrew for PW 30, it was a standard plan and normal crew day. PW 30 was schedule to launch from from Marine Corps Air Station (MCAS) Iwakuni to Kadena Air Force Base (AFB). There was nothing abnormal for the manifest, loading, maintenance, or take-off. Weather was rainy, but cleared up once they arrived at Kadena AFB.

b. While in Kadena, four passengers were late from the hangar back to PW 33 during the fueling delay. The fuel truck was manned by a U.S. Air Force member. AWF1 (b) (3) (A), (b) (6) is not sure of his uniform and does not recall the individual talking.

c. AWF1 (b) (3) (A), (b) (6) helped PW 33 crew with refueling and then refueled PW 30 and thinks he connected the hose for both aircrafts. AWF1 (b) (3) (A), (b) (6) did not take the receipt for the fuel so is not sure how much fuel was pumped. Once AWF1 (b) (3) (A), (b) (6) got the signal, he disconnects the hose and returned to the aircraft to prepare for take-off.

d. During the flight from Kadena AFB to RONALD REAGAN, AWF1 (b) (3) (A), (b) (6) was listening to all radio traffic. The first indication that something was wrong was PW 33 saying "declaring emergency." The other side then said "state of emergency" and a few seconds later, PW 33 said "dual engine failure."

e. AWF1 (b) (3) (A), (b) (6) first act was to make sure PW 30's crew was ok. He cannot recall if he was already in his vest and buckled in.

f. Once search and rescue (SAR) support was on site, PW 30 headed back to RONALD REAGAN. AWF1 (b) (3) (A), (b) (6) repeated that it was critical to focus on the mission to get on deck. After landing on RONALD REAGAN, AWF1 (b) (3) (A), (b) (6) stayed near PW 30 until all eight survivors were aboard.

g. AWF1 (b) (3) (A), (b) (6) [redacted] has never encountered dual engine failure in a C-2.

h. AWF1 (b) (3) (A), (b) (6) [redacted] saw pictures of the fuel samples from PW 30 and considers them not ok, but he was informed that the second sample was clear and that the first sample was taken before a gallon was drained.

(b) (3) (A), (b) (6) [redacted]

5830
18 Jan 18

MEMORANDUM FOR THE RECORD

From: CAPT [redacted] USN

Subj: SUMMARY OF INTERVIEW OF AWF3 [redacted] USN, ON 30 NOVEMBER 2017

1. The following is a summary of my interview with AWF3 [redacted] USN, on 30 November 2017 onboard Naval Air Facility Atsugi. AWF 3 [redacted] s assigned to Fleet Logistics Support Squadron (VRC) 30, Detachment 5.

2. The interview addressed the incident that occurred on 22 November 2017. AWF3 [redacted] provided the following description of events in chronological order.

a. On 22 November 2017, AWF3 [redacted] was part of the aircrew for PW 30. It was a normal day, but he felt it was going to be a long one. AWF3 [redacted] briefed the passengers for PW 30 and AWF3 [redacted] briefed the passengers for PW 33. When briefing, the crew always makes sure everyone is in a small huddle to ensure no one misses anything.

b. AWF3 [redacted] stated it was a standard flight from Marine Corps Air Station Iwakuni to Kadena Air Force Base (AFB). VRC 30 DET 5 had previously been based out of Kadena AFB and so AWF3 [redacted] was familiar with it.

c. At Kadena AFB, the fuel truck arrived driven by a U.S. Air Force member, and the aircrew connected the hose. There was nothing abnormal about fueling, taxi, take-off, or climb up. PW 30 had a good flight from Kadena AFB, trailing PW 33 en route to RONALD REAGAN.

d. While sitting in his seat, AWF3 [redacted] was looking behind him to make sure the passengers were in their seats. He heard over the headset "We have to go after them."

e. PW 30 circled and AWF3 [redacted] tried to look out the window, but someone else was seated by the window. AWF3 [redacted] asked that person, a pilot, to report what he saw. The pilot reported he could only see smoke. AWF3 [redacted] thought this might have been from the helicopters, which were popping smoke to mark the spot.

f. There was nothing abnormal about offload for PW 30 aboard RONALD REAGAN. AWF3 [redacted] waited for the helicopters to arrive. AWF3 [redacted] has no idea what caused the mishap. PW 33 and PW 30 have both been good birds, engine wise.

[redacted]

DEPARTMENT OF THE NAVY

VOLUNTARY STATEMENT

1. PLACE
Air Office

2. DATE
1 December 2017

I, LT (b) (3) (A), (b) (6) [redacted] (b) (3) (A), (b) (6) [redacted], make the following free and voluntary statement to CDR (b) (3) (A), (b) (6) [redacted] (b) (3) (A), (b) (6) [redacted], whom I know to be assisting with command inv[redacted].

I make this statement of my own free will and without any threats or promises extended to me. I fully understand that this statement is given concerning my knowledge of

The morning of the flight they were shuffling the manifest to balance out the two aircraft. The passenger safety brief was given by one of the aircrewman and included LPU, cranial, hatches, life raft and emergency exits and ramp. This was my fourth COD flight; most recently flew off on the 18th of November. The first leg was normal, we experienced pretty moderate turbulence. It was raining in Kadena, and it started leaking through the overhead hatch on the port side. The crew removed the cushions and stowed them which likely helped us egress later. During the second leg passengers were relaxed with cranial off and most listening to music.

There was a loud burst from forward of me; it was a short sustained burst. Immediately smoke filled the cabin from forward to aft from the bottom up. The smoke was a light dull gray, not thick enough to obscure vision, but it made my eyes burn slightly. The port engine sounded like it was winding down; it was accompanied by a vibration. There was no noticeable electrical interruption, no noticeable change in flight attitude associated with the bang. The aircraft felt more controlled then the turbulence on the first leg. I expected to be directed to put on oxygen, but that didn't happen. I put my cranial back on with my goggles down to protect my eyes, and made sure my LPU was tight. (b) (3) (A), (b) (6) [redacted] ran forward to remove and stow the overhead hatch, as he went back to his seat his headset pulled off and he continued to his seat to strap in. From the bang until water impact was four minutes max. After the impact I remember the water hitting my back. The next thing I remember was being on the surface. I saw the other COD overhead. I remember they signaled for an additional LPU since someone didn't have one.

/
/
/
/
/
/
/
/
/
/
/
/

DEPARTMENT OF THE NAVY

VOLUNTARY STATEMENT

1. PLACE
Air Office

2. DATE
1 December 2017

I, AECS (b) (3) (A), (b) (6) [redacted] (b) (3) (A), (b) (6) [redacted] make the following free and voluntary statement to CDR (b) (3) (A), (b) (6) [redacted] (b) (3) (A), (b) (6) [redacted] whom I know to be assisting with command investigation.

I make this statement of my own free will and without any threats or promises extended to me. I fully understand that this statement is given concerning my knowledge of

The morning of November 22nd we mustered at 0600. Two pilots and myself were picked up by the VFA-115 duty driver at approximately 0730. We were dropped off at the terminal, where we loaded our bags into PW 30, then proceeded to hang out in the VAW-125 hanger. The crew brief was conducted during this time, I overheard there were 3 discrepancies on PW33 and no discrepancies on PW30. Of the 3 gripes on PW33 I remember the first being that there was a leak on a windscreen that whistles, the second was an AT gripe, and I do not recall the third gripe.
Upon arriving at PW30 I was informed that several of us were moved to PW33 for weight balancing purposes. Previously there was only cargo on PW33, and all passengers were on PW30. Upon arriving at PW33 we were given a passenger brief aft of the PW33. I remember the brief including the route, use of LPU, cranial, and upon entering PW33 the crew pointed out life raft and emergency exit locations. I have flown 10-12 COD flights in my 17 years in the NAVY and nothing about the brief or preflight stood out to me as atypical.
The first leg was very normal, PW33 pressurized normally and there were no weird noises. At approximately 0900 we were airborne and I was able to doze off. I woke to the worst turbulence of my life, the crew passed out airsickness bags and a couple guys threw up. When we landed it was raining, and a water leak manifested from a port hatch.
We were on deck approximately an hour and a half. While on deck the crew and the passengers hung out around the back of the aircraft, and shifted to the hanger during fueling. The pilots apologized for the bumpy ride, and said as soon as we fuel up we'll need to head out since we had been delayed waiting on the fuel truck. Upon completion of fueling we jumped in and the left ahead of PW30.
After takeoff and level off, I again fell asleep. The leg was briefed to be two hours and I awoke after 1.5 hours at approximately 1430, I remember checking my watch. I couldn't tell if we had descended yet. I noticed the crew securing things, and doing arrival checks. The crew was wearing headsets, no cranial or earplugs, but had their LPU strapped.
/
/
/
/
/
/

DEPARTMENT OF THE NAVY

VOLUNTARY STATEMENT

1. PLACE
Air Office

2. DATE
1 December 2017

I, AECS (b) (3) (A), (b) (6) [redacted] (b) (3) (A), (b) (6) [redacted] make the following free and voluntary statement to CDR (b) (3) (A), (b) (6) [redacted] (b) (3) (A), (b) (6) [redacted] whom I know to be assisting with command inves[redacted].

I make this statement of my own free will and without any threats or promises extended to me. I fully understand that this statement is given concerning my knowledge of

I heard a loud bang on my left, the starboard side of the aircraft. The loud bang was immediately followed by vibration; the standing aircrew lost their balance. I felt deceleration. I did not feel yaw or change in altitude. My immediate thought was that there was an engine problem. A smell quickly filled the cabin after the bang. The smell was definitely not hydraulic fluid or electrical fire, it smelled of used fuel or oil. The smoke was not visible, and there was no noticeable change in lighting or electricity. The engine sounded like it was winding down and decelerating, not a sudden stop. The one crew member ran forward and returned with urgency to his seat. I looked out of my window to see the water and noticed that we were descending. I turned to a pilot sitting next to me and said, "get ready." From the bang until impact I would estimate 2-3 minutes passed, the vibration was steady throughout. I do not remember any instructions being given, only that the aircraft sounded weak like a shaft was winding down.

Upon impact I felt rapid deceleration. I do not remember feeling any yawing or multiple impacts. Loose gear flew around as the cabin quickly filled with water. The aircrew quickly jumped up and opened the rear hatch. The cabin was full of water in less than 5 seconds after impact. While under water I looked up and saw a light, then released my buckle and swam towards the light. I remember boxes floating. After I got my torso out of the hatch, I inflated my LPU and saw a couple people. After receiving direction from the crew to move away from the aircraft, so I pushed off the fuselage with my legs. The empennage was sticking out of the water while the remainder of the aircraft was submerged at an angle. The right engine appeared somewhat out of place to me, I did not notice any major damage to the body or tail of the aircraft it appeared to stay together. I also did not notice fire of any kind.

I told the aircrew that I could not swim, and the crew member who was sitting in front of me stayed with me. There was sea dye everywhere, I remember seeing the other COD, F-18's and Helicopters overhead. I don't remember seeing a raft from the water, but noticed one after I was in the helicopter. There were a lot of waves, and I remember ingesting a lot of water. The rescue swimmer deployed in the water, and they first took a pilot up whose LPU failed to inflate. When it was my turn the rescue swimmer grabbed me, I had trouble hearing him over the noise, so I grabbed him back. He pushed me off, and grabbed the strop. A few moments later he said, "Now grab me." Then he gave 2 signals and we were lifted up.

12 January 2018

Summary of Events 22 November 2017

Passengers had a 0600 showtime at the Kintai lobby to give bags to the COD det. VFA-115 passengers (LT [redacted] AECS [redacted] and me) were given a ride in the COD det's van to their hangar at 0730. We were assigned to Password 33. I originally sat next to LT [redacted] in the forward-most port row, but after realizing that the flight didn't have many passengers, moved to the second to aft-most starboard row since both seats were open. With all passengers seated in the aircraft, the two aircrewmen assigned to Password 33 gave a brief to passengers covering the location and functioning of escape hatches, seat harnesses, and LPUs. Taxi and takeoff from Iwakuni were uneventful.

The flight to Kadena was bumpy and IMC most of the way. We landed at Kadena in a rainstorm. The pilots of Password 33 said they had broken out at 500 feet on the ILS. We spent a lot of time waiting (I estimate around 45 minutes) for fuel trucks to arrive. LT [redacted] said we were supposed to takeoff at 1200 for a 1400 recovery aboard USS Ronald Reagan, but we didn't get airborne until 1300 because of the fuel delay. The flight to the boat was uneventful until around 1445. Weather conditions were VMC over the water. I noted our descent to 1.2 or 2K and knew we must be close to the Reagan.

Around 1445, I heard a very loud bang from a forward portion of the aircraft followed by violent shaking of the aircraft. The cabin started to fill with gray, wispy smoke shortly thereafter. The engines did not sound normal and the aircrewmen were visibly concerned. I knew we probably weren't going to make it to Reagan based on altitude and the deteriorating state of the aircraft. The aircrewman in the aftmost port seat ([redacted] got up to pop the emergency escape hatch over the 3rd aft most port row (forward hatch), then hurried back to his seat and restrapped in only a few moments before impact. I could see we were getting low out of the cabin windows. I tightened my straps. I felt the impact and got slammed back into my seat. I was amazed that we had survived the impact and the aircraft seemed to be intact in an upright state. The cabin started to fill with water rapidly – chest-high seemingly instantaneously and quickly rising. I took a breath, grabbed a reference point (seat in front of me), and popped the safety buckle. I pulled myself through the water to the escape hatch, which was a highly visible light in the darkness of the flooding cabin. I believe I was the first to the make it to the forward hatch. I couldn't get out of the hatch on my first attempt due to a significant amount of debris that had collected at the opening that caught me at my shoulders. By this point, the fuselage was filled with water all the way to the escape hatch. I was able to get my head out of the water to take a breath and went back under the water to reattempt egress. I went back up through a small gap and managed to work enough space through the debris to get my entire body through. I got clear of the hatch and slid towards the port wing where I inflated my LPU. A couple of other people including AECS [redacted] were already out (after egressing through the aft hatch) and another passenger got out of the forward hatch behind me with the aircraft still floating on its wings. I attempted to stand up and then noticed that my left boot had become wedged into the flap hinge on the trailing edge of the port wing. I was eventually able to work my boot free and get separated from the aircraft. The wing was sinking under the water at this point and as I floated by the empennage of the aircraft, I noted the starboard vertical stab was completely missing.

The waves were decently tall. The first person I saw in the water was LT [redacted] I joined up with him and noted lots of swelling on the left side of his face and a couple of cuts on the left side of his forehead, but he was not bleeding profusely. He indicated he was okay. We saw a couple of other survivors aft of where the aircraft had sunk and joined with them. One was an aircrewman (callsign [redacted] who didn't have an LPU. We floated together and noted other survivors had gotten split up from us and were a significant distance away.

The first aircraft we saw was Password 30. They flew over and began an orbit. Shortly thereafter, two SAR helos showed up. Everyone was working to not aspirate water with controlled breathing since the seas were rough. Password 30 departed and we subsequently noted an F/A-18 orbiting overhead. A third helo showed up later and was orbiting overhead while the first two helos were picking up survivors. An MH-60S came overhead and dropped a strop. [redacted] secured it around one of the other survivors. He kept insisting he'd be the last one to go even though he didn't have an LPU. LT [redacted] and I told him he was going to go up next, but he kept refusing. A rescue swimmer then arrived. We told him we needed another LPU and they dropped one from the helo. The rescue swimmer gave it to the [redacted] The swimmer pulled me to the strop and secured it to me. I was winched up to join two other sailors who were already in the helo. LT [redacted] came up next, followed by [redacted] With five survivors onboard, the helo returned to Reagan. I could see Reagan on the horizon steaming straight for the crash site. The helo landed and we were immediately greeted by medical personnel. I had no significant injuries beyond some minor aches and bruises.

[redacted]

LT [redacted]
VFA-115

DEPARTMENT OF THE NAVY

VOLUNTARY STATEMENT

1. PLACE
Air Office

2. DATE
1 December 2017

I, AO2 (b) (3) (A), (b) (6) [redacted] (b) (3) (A), (b) (6) [redacted] make the following free and voluntary statement to CDR (b) (3) (A), (b) (6) [redacted] (b) (3) (A), (b) (6) [redacted], whom I know to be assisting with command inves [redacted].

I make this statement of my own free will and without any threats or promises extended to me. I fully understand that this statement is given concerning my knowledge of

The morning of the flight, the duty driver picked us up. The crew asked for volunteers to move from PW30 to PW33. At the back of PW33 AW3 (b) (3) (A), (b) (6) [redacted] gave a safety brief that lasted about five minutes. The brief covered LPU and cranial use. After we were inside they briefed harness use and emergency exits, as well as oxygen use after I asked. This was my third COD flight; the other two were in 2011-2012 time frame. The first leg we had the worst turbulence I have ever experienced in my life, I asked for an airsickness bag, but I did not vomit. I took my cranial off about halfway through the flight. When we landed we were told to stretch our legs, and waited by the COD while the same fuel truck fueled both COD's. We were on deck approximately one hour.

The second leg was smoother, the takeoff was normal and I was able to sleep until our normal decent. I heard an explosion, a loud boom over my right hand shoulder. It was instantly followed by stuttering that reminded me of a standard transmission clutch grinding. I don't remember any motion associated with the bang. White hazy smoke seemed to come from behind and fill the cabin in only a few seconds. Smelled maybe like hydraulic fluid hitting a hot tire. I saw (b) (3) (A), (b) (6) [redacted] pop the forward hatch and sit back down. Approximately two to three minutes passed from the bang until water impact, I do not remember receiving any instructions during that time.

Upon impact I felt two hits; both pushed my body forward, toward the aft end of the aircraft. I did not have time to take a breath, before the water covered my head. I unstrapped my harness and swam to where I remembered the hatch to be, but I was stuck behind an object and I couldn't get through. I had to go down and around to get out. After egressing the aircraft I noticed a lot of debris. I saw the other aircrewman, two officers, and (b) (3) (A), (b) (6) [redacted] The tail appeared to be intact and above water. I remember seeing a raft at some point, saw the other COD, F-18, a bigger aircraft, and approximately two or three helicopters. I was in the water for approximately ten minutes. I was picked up first, followed by (b) (3) (A), (b) (6) [redacted] the two officer passengers, and the aircrew was last.

/
/
/
/
/
/
/

DEPARTMENT OF THE NAVY

VOLUNTARY STATEMENT

1. PLACE
Air Office

2. DATE
1 December 2017

I, ABHAR (b) (3) (A), (b) (6) (b) (3) (A), (b) (6) (b) (3) (A), (b) (6), make the following free and voluntary statement to CDR (b) (3) (A), (b) (6), whom I know to be assisting with command inve.

I make this statement of my own free will and without any threats or promises extended to me. I fully understand that this statement is given concerning my knowledge of

The morning of the flight, the crew asked for four volunteers to move from PW30 to PW33. I moved my bags over and waited outside for the other three to show up. When they arrived at PW33 an aircrewman gave us a brief about the flight behind the COD. I remember the brief including the route, LPU, seatbelts, cranial, and once in the plane they pointed out the escape hatches. The brief lasted approximately ten minutes. The COD seemed old and rusty to me, and I remember waiting a long time to take off. The first leg I tried to doze off and went in and out of sleep. The flight was really bumpy and I think someone got sick, I saw them pass out a bag. It was my first COD flight, and the smallest aircraft that I have flown in. When we landed in Kadena it was raining, we were told to stretch our legs so we went to the other COD while they were fueling. We were on deck for 30 to 45 minutes, while the same truck fueled both COD's.

The second takeoff was normal, the crew said next stop Ronald Reagan. The turbulence was a lot less on the second leg. I was able to fall asleep on the second leg, and about half way through I removed my cranial to listen to music, but kept my LPU on the whole time. The flight was smooth until I heard a crash like hitting concrete, with my headphones in the noise seemed to come from all around. Within two to three seconds I noticed smoke which filled the cabin in less than 10 seconds. The smoke was a little foggy; it reminded me of the gas chamber in basic training or fuel. The gas seemed to be coming from the front of the aircraft. After the bang the aircraft began shaking badly, I thought it might tear apart. I felt us descend, the lights stayed normal. From the bang to water impact was less than 60 seconds. I remember seeing the crew open up both hatches and attempt to wake up the passengers prior to impact.

/
/
/
/
/
/
/
/
/
/
/

DEPARTMENT OF THE NAVY

VOLUNTARY STATEMENT

1. PLACE
Air Office

2. DATE
1 December 2017

I, ABHAR (b) (3) (A), (b) (6) [redacted] (b) (3) (A), (b) (6) [redacted] (b) (3) (A), (b) (6) [redacted], make the following free and voluntary statement to CDR (b) (3) (A), (b) (6) [redacted] whom I know to be assisting with command investigation.

I make this statement of my own free will and without any threats or promises extended to me. I fully understand that this statement is given concerning my knowledge of

Upon impact I felt sudden deceleration and pushed to my right, port yaw. Only a few seconds after impact water was over my head, I believe it came from behind me. My cranial was off but my LPU was on, I remember it quickly going dark from the water. I unlatched my seatbelt, and navigated through a lot of debris. I found an air pocket to get a second breath and then swam towards the escape hatch. I had to wait for a few people to exit then I exited the forward hatch. I tried to help [redacted] (b) (3) (A), (b) (6) out, but he had to go down before he could get out. After I was out I saw aircrew helping AECS exit the aft hatch.
The tail of the aircraft was the only part not submerged. Overall the aircraft looked intact and I saw no major pieces broken off. In the water I huddled with [redacted] (b) (3) (A), (b) (6) AECS, and an aircrewman. All our LPU's worked. About 2 minutes later I saw helicopters overhead. They picked up the pilot first, AECS second, and then the second helicopter picked up myself followed by [redacted] (b) (3) (A), (b) (6)

/
/
/
/
/
/
/
/
/
/
/
/
/
/
/
/
/
/
/
/
/
/

FLEET LOGISTICS SUPPORT SQUADRON THREE ZERO DETACHMENT FIVE

PROVIDERS

PASSENGERS TRAVELING TO/FROM USS RONALD REAGAN
***CONTACT PS2 [redacted] AT (b) (3) (A), (b) (6)
ALL BAGGAGE WILL BE TURNED OVER TO PASSENGER COORDINATOR AT MUSTER TIME. NO CARRY-ON BAGGAGE ALLOWED.
*** PASSENGER MUSTER TIME IS THREE HOURS PRIOR TO TAKEOFF.***

Wednesday, November 22, 2017

TIME ZONE	SUNRISE	SUNSET
+9	0649	1704

JULIAN DATE: 7326

SDO: LT [redacted] (b) (3) (A), (b) (6)
BEACH DET POC: LSC [redacted]
DUTY KHAKI: ATCS [redacted]

FLIGHT EVENTS

EVT	TMR	SIDE	LOAD BRIEF	TIME		ETE	ROUTE	CREW	FUEL / NOTES
1	2R1	PSWD __	0600	T/O:	0830	2+15	RJOI - RODN	*LT [redacted] LT [redacted] *AWF1 [redacted] AWF3 [redacted]	12K
				LND:	1045				
			0700	T/O:	1200	2+00	RODN - CVN76		
				CVN:	1400				
				CAT:	1530	3+00	CVN76 - RJOI		
				LND:	1830				
2	2R1	PSWD __	0600	T/O:	0830	2+15	RJOI - RODN	LT COMBS / *LCDR [redacted] *AWF2 [redacted] AWF3 [redacted]	12K
				LND:	1045				
			0700	T/O:	1200	2+00	RODN - CVN76		
				CVN:	1400				
				CAT:	1530	3+00	CVN76 - RJOI		
				LND:	1830				

* = A/C OR CC

FLIGHT NOTES

GROUND EVENTS

TIME	EVENT	LOCATION	POC	REQUIRED PERSONNEL
TBD	FOD WALKDOWN	FLIGHT LINE	LINE LPO	ALL HANDS

LEAVE	TAD	SNIV	MED DOWN

QUESTIONS OF THE DAY

EP: SMOKE AND FUMES ELIMINATION
NATOPS: MAX BARRICADE GROSS WEIGHT
SOP: DEFINITION OF CREW REST

OPTAR TRACKER

HOURS REMAINING:	178.7
HOURS USED:	170.3
QTR HOURS AVAILABLE:	349

SUBMITTED:

[redacted] (b) (3) (A), (b) (6)
DUTY OFFICER

APPROVED:

[redacted] (b) (3) (A), (b) (6)
OFFICER IN CHARGE

PRIORITY <<= FF

ADDRESSEE(S)

FILING TIME

SPECIFIC IDENTIFICATION OF ADDRESSEE(S) AND/OR ORIGINATOR

3. MESSAGE TYPE <<= (FPL

7. AIRCRAFT IDENTIFICATION: PSWRD33

8. FLIGHT RULES: Y

TYPE OF FLIGHT: M

9. NUMBER:

TYPE OF AIRCRAFT: C2A

WAKE TURBULENCE CAT: M

10. EQUIPMENT: SHIRTUYGD/S

13. DEPARTURE AERODROME: RODN

TIME: 0300

15. CRUISING SPEED: N0250

LEVEL: F190

ROUTE: ROUTE DEPARTURE DCT AZAMA Y78 AVLAS R584 KEITH

// VFR AT SEA WITH DUE REGARD 0+30

16. DESTINATION AERODROME: ZZZZ

TOTAL EET HR/MIN: 0200

ALTN AERODROME: RODN

2ND ALTN AERODROME:

18. OTHER INFORMATION

PBN/ L1C2D1S1

OPR/US NAVY

ID/PASSWORD

RMK: ZZZZ = USS SHIP AT SEA

RODN PPR: 22GQ08

NOT FOR TRANSMISSION

19. SUPPLEMENTARY INFORMATION

ENDURANCE: -FUEL/ 4+30 -> POB/ 4+PAX -> RDO/ 121.5 -> 243 -> 500 -> 8364 282.8 <<=

TYPE OF EQUIPMENT: POLAR -> DESERT -> MARITIME -> JUNGLE -> GLOBAL

LIFE JACKETS: -> JACKETS -> LIGHT -> FLICR

RADIO FREQUENCY: -> 243.0/282.8 <<=

DINGHIES: COLOR: NUMBER: TOTAL CAPACITY: OTHER EQUIPMENT:

DINGHIES 6/30 COVER ORANGE/BLACK RMK/ SMOKE/MIRROR/FLARES <<=

REMARKS: NOTAMS CHECKED
WX CHECKED

AIRCRAFT SERIAL NUMBERS AND TYPE OF AIRCRAFT IN FLIGHT: 162175 (33) C-2A

CREW LIST: [ ] ATTACHED [X] LOCATED AT: RODN 634-6390

PASSENGER MANIFEST: [ ] ATTACHED [X] LOCATED AT: RODN 634-6390

NAME OF PILOT IN COMMAND: ON FILE / RODN

SIGNATURE OF APPROVAL AUTHORITY: (b) (3) (A), (b) (6) [redacted]

AIRCRAFT HOME STATION OR ORGANIZATION: RJTA VRC-30 DET 5

DD Form 1801, May 87

DOD INTERNATIONAL FLIGHT PLAN

UNITED STATES MARINE CORPS
COMMANDER, U.S. MARINE CORPS FORCES, PACIFIC
CAMP H. M. SMITH, HI 96861-4139

IN REPLY REFER TO:
MARFORPACO 3710.4A
Safety
17 JAN 2013

U.S. MARINE CORPS FORCES, PACIFIC ORDER 3710.4A

From: Commander, U.S. Marine Corps Forces, Pacific
To: Distribution

Subj: U.S. MARINE CORPS FORCES, PACIFIC (MARFORPAC) POLICY ON SUPPLEMENTAL EMERGENCY BREATHING DEVICES (SEBD) AND HELICOPTER EGRESS SYSTEM FOR PASSENGERS (HESP)

Ref: (a) OPNAVINST 3710.7U
(b) MCO 3502.3B

1. Situation. The number one factor in forced water landing deaths is drowning. The purpose of this Order is to delineate policy, which augments reference (a) with regard to passenger safety and survival equipment requirements, for passengers participating in overwater flights aboard MARFORPAC rotary wing and tilt-rotor aircraft.

2. Cancellation. MARFORPACO 3710.4.

3. Mission. To augment safety and egress ability, passengers embarked aboard MARFORPAC rotary wing or tilt-rotor aircraft that anticipate overwater flight (note: see paragraph 4c(1), Definitions), shall be issued a SEBD/HESP to the maximum extent possible.

4. Execution

a. Commander's Intent and Concept of Operations

(1) Commander's Intent. To ensure Underwater Egress Training (UET) in the Modular Amphibious Egress Trainer (MAET) and SEBD/HESP training is conducted. This training will instruct passengers on how to successfully evacuate a rotary wing or tilt-rotor aircraft after a forced water landing therefore, increasing a passenger's chance to successfully evacuate an aircraft in the event of a forced water landing.

(2) Concept of Operations. Unit commanders are responsible for ensuring assigned personnel who fly overwater aboard rotary wing or tilt-rotor aircraft receive applicable UET

DISTRIBUTION STATEMENT A: Approved for public release, distribution is unlimited.

in the MAET and SEBD/HESP training prior to being issued SEBD/HESP. UET and SEBD/HESP training are taught at Marine Corps Combat Swimming Pools and Aviation Survival Training Centers (ASTC). This training is valid for a two-year period or a single Marine Expeditionary Unit (MEU) Pre-Deployment Training Program (PTP) cycle, before refresher training is required.

b. Subordinate Element Tasks

(1) I Marine Expeditionary Force (MEF) and III MEF will:

(a) Per reference (b), ensure MEU personnel who anticipate overwater flight aboard rotary wing or tilt-rotor aircraft receive applicable UET in the MAET and SEBD/HESP training during the PTP cycle.

(b) Ensure personnel assigned to the Unit Deployment Program (UDP) who anticipate overwater flight aboard rotary wing or tilt-rotor aircraft receive applicable UET in the MAET and SEBD/HESP training prior to deployment.

(c) This Order shall not eliminate the PTP requirement for MEU and UDP personnel.

(2) Unit Commanders will:

(a) Ensure their personnel receive applicable UET in the MAET and SEBD/HESP training before participating in overwater flights.

(b) Ensure the scheduling and tracking of initial and refresher UET and SEBD/HESP training. Training shall be tracked locally and documented in the individual's training jacket. This training is valid for a two-year period before refresher training is required. For MEU personnel, training is only valid for the current MEU cycle.

(c) Ensure Combat Survival Pools or ASTCs provide appropriate UET in the MAET and SEBD/HESP training. In the rare event a passenger is unable to complete appropriate training before overwater flight (e.g., late notice overwater flight not anticipated by the unit), this Order should not prevent the passenger from flying overwater aboard rotary wing or tilt-rotor aircraft. In this rare circumstance, after evaluating the risk, unit commanders are authorized to provide a SEBD/HESP to the untrained passenger provided this passenger is briefed prior to

flight on the proper use and associated dangers of SEBD/HESP and rotary wing or tilt-rotor underwater egress. This exception shall not eliminate the PTP requirement for MEU and UDP personnel nor shall it be used to circumvent the intent of this Order.

(d) Ensure Plane Team Commanders or Stick Leaders identify untrained passengers to the aircrew.

(3) Rotary Wing/Tilt-Rotor Squadron Commanders will:

(a) Ensure the appropriate number of Ready for Issue (RFI) SEBD/HESP are provided to passengers for overwater flights.

(b) Ensure Squadron aircrew are performing pre-flight and post-flight inspections of SEBD/HESP and provide abbreviated SEBD/HESP instructions as part of the passenger safety brief. Exceptions to passenger briefing requirements are provided in reference (a). If passengers have not received SEBD/HESP training, aircrew shall, prior to flight, brief the untrained passengers on the proper use and associated dangers of SEBD/HESP and underwater egress. The brief should be approved locally by an Aero Medical Safety Officer (AMSO).

c. Definitions

(1) Overwater Flight. For rotary wing aircraft, those flights which take place beyond auto-rotational distance to land. For tilt-rotor aircraft, those flights where the aircraft enters Vertical Take Off and Landing (VTOL), defined as 85 Nacelle or greater per the Naval Air Training and Operating Procedures Standardization manual, over water or any ship board operations.

(2) Passenger. An individual who is not part of the aircrew traveling in an aircraft designed or normally configured for passenger (non-aircrew) carrying capability on a point-to-point flight.

(3) SEBD/HESP. Supplemental Emergency Breathing Device/Rotary Wing Egress System for Passengers or similar underwater breathing devices/floatation devices which provide supplemental oxygen and a floatation device to passengers or aircrew in the event of a forced water landing.

(4) Unit Commander. Commanding Officers of battalion /squadron level commands or higher.

5. Administration and Logistics. Submit all recommendations concerning this Order to MARFORPAC Safety via the chain of command.

6. Command and Signal

a. Command. This Order is applicable to all MARFORPAC commands.

b. Signal. This Order is effective on the date signed.

(b) (3) (A), (b) (6)
[redacted]
Chief of Staff

Distribution: This Order is available electronically via MARFORPAC intranet.
https://intranet.mfp.usmc.mil/OrgAreas/G1/FAdj/US%20MARINE%20CORPS%20FORCES%20PACIFIC%20UNCLASSIFIED%20DIRECT/Forms/AllItems.aspx

(b) (3) (A), (b) (6) CAPT (LCC-19)

From: (b) (3) (A), (b) (6) CAPT (LCC-19)
Sent: Monday, April 16, 2018 11:52 AM
To: (b) (3) (A), (b) (6) CAPT (LCC-19)
Subject: FW: JAGMAN Investigation

-----Original Message-----
From: (b) (3) (A), (b) (6)
Sent: Sunday, April 15, 2018 09:52 AM Coordinated Universal Time
To: (b) (3) (A), (b) (6)
Subject: RE: JAGMAN Investigation

Sir,

I had a chance to touch base with (b) (3) (A), (b) (6) (Det 5 OIC) this evening and he confirmed every one of their crew have emergency oxygen bottles in their flight gear at all times.

Their nomenclature is different than SEBD.

They call it the "SRU-42 Helicopter Aircrew Breathing Device (HABD)".

Very respectfully
(b) (3) (A), (b) (6)

Enclosure (47)

FLIGHT WEATHER BRIEF

PART I - TAKEOFF DATA

1. DATE	2. ACFT Type/NO.	3. DEP PT/ETD	4. RWY TEMP	5. DEWPOINT	6. TEMP DEV	7. PRES ALT	8. DENSITY
171122	PSWD30/C2A/	RJAW 0500	24C/75F	19C/66F	+09	+400 FT	+1800 FT

9. SFC WIND	10. CLIMB WINDS	11. LOCAL WEATHER WATCH/WARNING/ADVISORY	12. RSC/RCR
06017KT	SEE HWD PACKAGE	NONE	N/A

13. REMARKS/TAKEOFF ALTN FCST
NONE

PART II - ENROUTE & MISSION DATA

14. FLT LEVEL/WINDS/TEMP [X] SEE ATTACHED

200 26075KT / -18°C

15. SPACE WEATHER

	NO IMPACT	MARGINAL	SEVERE
FREQ			
GPS			
RAD			

16. SOLAR/LUNAR — LOCATION: MCAS IWAKUNI

BMNT	2053 Z		
SR	2151 Z	MR	0040 Z
SS	0804 Z	MS	1106 Z
EENT	0901 Z	ILLUM	11 %

17. CLOUDS AT FLT LEVEL: [ ] YES [ ] NO [X] IN AND OUT

18. OBSCURATIONS AT FLT LEVEL RESTRICTING VISIBILITY: [ ] YES [X] NO — TYPE N/A — 7 miles visibility

19. MINIMUM CEILING - LOCATION: 025 FT AGL - MCAS IWAKUNI

20. MAXIMUM CLOUD TOPS - LOCATION: 280 FT MSL - MCAS IWAKUNI

21. MINIMUM FREEZING LVL - LOCATION: 080 FT MSL - MCAS IWAKUNI

22. THUNDERSTORMS		23. TURBULENCE			24. ICING				25. PRECIPITATION				
CHART		CHART FORECAST			CHART FORECAST				CHART RADAR				
X NONE	AREA / LINE	NONE	IN CLEAR	IN CLOUD	NONE	RIME	MIXED	CLEAR	NONE	DRIZZLE	RAIN	SNOW	PELLET
	ISOLATED 1 - 2%	LIGHT		X	TRACE				LIGHT		X		
	FEW 3 - 15%	MODERATE		^	LIGHT		X		MODERATE				
	SCATTERED 16 - 45%	SEVERE			MODERATE				HEAVY				
	NUMEROUS > 45%	EXTREME			SEVERE				SHOWERS		X		
HAIL, SEVERE TURBULENCE & ICING, HEAVY PREPCIPITATION, LIGHTING & WIND SHEAR EXPECTED IN AND NEAR THUNDERSTORMS		LEVELS SFC-050 ; ^ 100-120			LEVELS 100-200				FREEZING				
LOCATION		LOCATION RJAW & RJOI ; ^RJOI			LOCATION SHIKOKU & RJOI				LOCATION W. HONSHU (INCLUDING RJOI)				

PART III - AERODROME FORECASTS

26.	27. VALID TIME	28. SFC WIND	29. VSBY/WEA	30. CLOUD LAYERS	31. ALTIMETER	RWY TEMP	PRES ALT
DEST-RJOI	0700Z to 0900Z	01010KT	4SM / -SHRA BR	BKN025 BKN060 BKN120 OVC210	3004 INS	12 C	+210 FT
ALTN-RODN	0730Z to 0930Z	18010G15KT	7SM / NSW	BKN025 BKN080	3006 INS	20 C	+20 FT

PART IV - COMMENTS/REMARKS

32. BRIEFED RSC/RCR [ ] YES [X] NOT AVAILABLE

33. PMSV 344.6

34. ATTACHMENTS [ ] YES [X] NO

35. REMARKS METAR RJOI 212155Z 29005KT 9999 FEW025 BKN040 BKN210 07/04 A3016 RMK SLP213 T00720039

PART V - BRIEFING RECORD

36. WX BRIEFED TIME	37. FLIMSY BRIEFING NO.	38. FORECASTER'S NAME	39. NAME OF PERSON RECEIVING BRIEFING
21 / 2244 Z	RJOI 11 - 134	[redacted] (b) (3) (A), (b) (6)	LCDR [redacted] (b) (3) (A), (b) (6)
40. VOID TIME	**41. EXTENDED TO/INITIALS**	**42. WX REBRIEF TIME/INITIALS**	**43. WX DEBRIEF TIME/INITIALS**
22 / 0144 Z	Z SAG	22 / 0201 Z SAG	

COD TWO

22-Nov	BEACH MUSTER TIME: 0700(L)	RRN ARRIVAL TIME: 1400(L)	ATO BRIEF MUSTER TIME: 1300(L)	RRN DEPARTURE TIME: 1530(L)

IWAKUNI - RRN

7	PRI	PASSENGER	RANK	NOTES
1	2	[redacted]	E-5	[redacted]
2	2	CHIALASTRI, MATTHEW	E-3	
3	2	GROSSO, BRYAN	E-2	
4	2	[redacted]	E-1	
5	2	[redacted]	O-3	
6	2	[redacted]	O-3	
7	2	[redacted]	E-8	

STAND-BY PASSENGERS

RRN - IWAKUNI

0	PRI	PASSENGER	RANK	NOTES

STAND-BY PASSENGERS

PASSENGER INSTRUCTIONS:

* Luggage/seabag no more than 40LBs. (OPNAVINST 4631.2D)
*Absolutely NO carry on baggage.
* Luggage Check In 2 HRS prior to COD ARRIVAL / 30 MINS prior to HELO ARRIVAL
* Civilian Attire: No Sandals; No Shorts.
*Please bring bags [redacted] for brief time.

UPDATED:	LS1 [redacted]	0928L	22-Nov

PASSENGER COORDINATOR:

PS2 [redacted]
Email: [redacted]
Cell: [redacted]
PLEASE CONTACT PAX COORDINATOR FOR BEACH MUSTER INFORMATION

ATO J-DIAL: [redacted]

Facility Name: USS Ronald Reagan (CVN 76)
Date: November 27, 2017
Subject: Mishap Involving Password 33
Period Covered: November 22, 2017 0528 UTC, to November 22, 2017 0548 UTC

Agencies Making Transmission	Abbreviations
Freedom Marshal Control	MAR
Commanding Officer, CVN 76	FRDM
Password 30	PW30
Password 33	PW33

I hereby certify that the following is a true transcription of the recorded conversations pertaining to the subject aircraft accident involving VRC-30 C-2, Password 33.

(b) (3) (A), (b) (6)

[redacted]

USS RONALD REAGAN (CVN 76)

0528
((0529-0532)
0533

0533:50	PW33	freedom marshal password three three
0534		
0534:10	PW33	tiger marshal password three three
0534:26	FRDM	password this is freedom continue inbound
0535		
0536		
0537		
0537:12	PW30	freedom marshal password three zero
0537:57	PW30	freedom marshal password three zero

0538		
0538:03	MAR	password three zero password three three freedom marshal case one recovery expected b r c one two zero altimeter two niner eight five report ten miles with a see me
0539		
0539:38	PW30	freedom marshal password three zero
0539:43	MAR	password three zero password three three freedom marshal case one recovery expected b r c one two zero altimeter two niner eight five report ten miles with a see me
0539:53	PW30	three zero copies
0539:59	MAR	password three zero say state
0540		
0540:02	PW30	seven point seven
0540:06	MAR	password three three say state
0540:19	PW33	marshal password three three
0540:21	MAR	password three three freedom marshal
0540:28	PW33	three three mom's three two zero at twenty state seven five
0540:36	MAR	password three three freedom marshal case one recovery expected b r c one two zero altimeter two niner eight five report ten miles with a see me
0540:42	PW33	two niner eight five wilco

0540:45	MAR	password three zero mark your father
0540:48	PW30	three one five for three two password three zero
0540:55	MAR	roger
0541		
0541:28	PW33	password three three has load report when ready
0541:35	MAR	password three three ready to copy
0541:37	PW33	pilot's name is combs seven passengers two thousand
0541:53	MAR	password three three say again
0542		
0542:00	PW33	password three three declaring emergency at this time
0542:04	MAR	password three three roger say intentions
0542:29	MAR	password three three say nature of emergency
0542:31	PW33	password three three dual engine failure
0542:41	PW30	marshal password three three is experiencing a dual engine emergency
0542:48	MAR	password three three roger

0543

0543:00	PW33	three three is going in the water

End of Transcript.

Facility Name: USS Ronald Reagan (CVN 76)
Date: November 27, 2017
Subject: Mishap Involving Password 33
Period Covered: November 22, 2017 0538 UTC, to November 22, 2017 0558 UTC

Agencies Making Transmission	Abbreviations
Air Officer	BOSS
Password 30	PW30
Hunter 610	H610
Hunter 622	H622
Diamond Back 113	D113
Mace 215	M215
Saberhawk 702 S702	
Unknown	UNK

I hereby certify that the following is a true transcription of the recorded conversations pertaining to the subject aircraft accident involving VRC-30 C-2, Password 33.

(b) (3) (A), (b) (6)

USS RONALD REAGAN (CVN 76)

0538
0539
0540
0541
0542

0542:55	PW30	tower password three zero
0542:57	BOSS	go ahead
0542:59	PW30	tower password three three is experiencing a dual engine emergency they are fifteen miles to the northwest of the field of the ship

0543		
0543:08	BOSS	copy fifteen miles northwest dual engine failure
0543:13	PW30	tower we are trying to get eyes on them right now we cannot see them
0543:18	PW30	tower it looks like they are in the water we need to launch somebody to come get them
0543:24	BOSS	copy we're contacting a helo now uhh can you give us a better position please
0543:29	PW30	yes we are flying over them right now we'll send you a position
0543:42	BOSS	six one zero tower button one
0543:45	H622	six two two is up button one
0543:49	PW30	tower they are fif uhh twelve miles to the northwest of the ship
0543:56	BOSS	copy twelve miles northwest
0543:58	BOSS	six one zero tower button one
0543:59	H610	tower six one zero is up
0544		
0544:01	BOSS	six one zero uhh we had a cod password three uhh zero went into the water twelve miles northwest mom if you can go overhead there is a circling c two above

0544:13	PW30	it's password three three is in the water password three zero is circling overhead
0544:18	BOSS	copy password three three in the water
0544:33	H610	six one zero is en route we'll be about six mikes out
0544:37	BOSS	roger that
0544:43	PW30	tower password three three is one point two overhead where they are in the water
0544:51	BOSS	copy
0545 0545:01	BOSS	six one zero tower they got ten souls onboard
0545:07	H610	copy
0545:08	PW30	tower do you want me to switch rep or just stay up with you
0545:11	BOSS	no three zero stay overhead and stay on my frequency and let me know how much fuel you have
0545:17	PW30	we have seven oh right now our bingo is five five
0545:22	BOSS	copy three zero let's keep you overhead until we have the helo below
0545:26	PW30	(unintelligible) the whole plane has sunk

0545:34	H610	tower six one zero is en route we are two point five uhh play time
0545:39	BOSS	copy two point five
0545:42	BOSS	confirm that's two point five hours
0545:44	H610	affirm for six one zero
0545:54	BOSS	(unintelligible) password three zero do you have eyes on six one zero can you talk him onto where they went into the *(water)
0546		
0546:00	PW30	password three zero we'll be twelve miles to the northwest
0546:05	PW30	we'll be at one thousand feet
0546:10	H610	password hunter six one zero *(has you visual)
0546:13	PW30	password copies
0546:16	PW30	six one zero we are at a thousand feet we'll be circling overhead twelve miles to the northwest of mom
0546:25	H610	password six one zero has visual on the airborne uhh password
0546:30	PW30	okay i'll tell you a mark of where exactly they are
0546:52	H610	roger i got a light

0546:53	PW30	six oh one do you see the downed cod
0546:58	H610	no visual on password in the water
0547		
0547:01	PW30	you do
0547:04	H610	six one zero negative negative on cod
0547:06	PW30	the cod is now completely under water it's exactly twelve miles to the north marking three one zero from mom
0547:15	PW30	you cannot see any of the cod and i do not see any passengers
0547:26	H610	hunter six one zero roger
0547:28	PW30	we are at thirteen hundred feet but if you can get lower you might be able to see if there is any people
0547:36	H610	six one zero copy all
0547:52	H610	password six one zero call on top
0547:56	PW30	say again
0547:57	H610	call on top where the wreckage was
0548		
0548:00	PW30	okay i'll tell you we'll be there in ten seconds

0548:12	PW30	do you see me right now
0548:16	H610	(unintelligible)
0548:17	PW30	six one zero---below my left wing right now
0548:23	H610	six one zero copy all
0548:37	PW30	six one zero where are you
0548:39	H610	six one zero at your uhh ten o'clock right now
0548:44	PW30	(unintelligible) in sight see you i'll talk you on if you just go straight
0548:49	H610	six one zero
0548:54	UNK	(unintelligible)
0548:56	PW30	say again
0549		
0549:27	M215	six one zero two fifteen is overhead i have eyes on the submerged cod check left five
0549:34	H610	six one zero copies
0549:38	PW30	six one zero it's about uhh two miles ahead of you you'll see light blue water where they went in

0549:47	M215	six one zero two one five that's a good heading
0549:48	H610	six one zero has visual on the survivors
0550		
0550:03	H622	one zero two two is inbound to your location
0550:06	M215	six one zero mark your current position you just overflew it
0550:34	PW30	six one zero is there anything else what do you need from us
0550:42	BOSS	password three zero tower once six one zero is eyes on the crash site i i need you to recover to mom
0550:50	PW30	password three three copies
0550:53	D113	tower one thirteen be advised holding overhead at angels four the approximate crash site request lat long when able
0551		
0551:16	PW30	tower three three six one zero has eyes on request a straight in
0551:26	BOSS	calling tower say again
0551:27	PW30	password three three requesting a straight in
0551:36	BOSS	copy three three take overhead mom one point two for now

0551:39	PW30	overhead one point two password three three
0552		
0552:21	H610	tower six one zero is on top executing the rescue now approximate lat long
0552:29	H610	is two one two five decimal five north one three five one one decimal seven four east
0552:41	BOSS	six ten tower you're gonna have to say again
0552:46	H610	tower from six ten we are three two zero at thirteen point eight miles
0552:52	BOSS	copy three two zero at thirteen point eight and you're overhead
0552:55	H610	affirm we are executing rescue right now
0552:58	BOSS	copy
0553		
0553:00	BOSS	can you read past your lat long please
0553:08	M215	six one zero two one five can relay tower two one five approximate north two one two five decimal five east one three five one one decimal seven
0553:20	BOSS	good copy
0554		
0554:12	S702	ninety nine seven zero two holding overhead cherubs five

0554:53	BOSS	ninety nine button one can i get updated states please
0554:59	D113	one thirteen eleven point five
0555		
0555:02	M215	two fifteen nineteen five over five
0555:06	PW30	password three three six point nine
0555:12	UNK	three three are you coming for a straight in
0555:17	PW30	three three copies
0555:34	PW30	password three three requesting straight in if available
0555:45	BOSS	six one zero tower
0555:47	H610	tower go for six one zero
0555:49	BOSS	if you're max passengers you can expect spot seven head inbound
0555:54	H610	six one zero
0555:57	BOSS	two zero five two one five can you push button eighteen please
0556		
0556:02	M215	two fifteen

0556:40	BOSS	password three three charlie and you're cleared drag report three miles
0556:43	PW30	three three
0557		
0557:00	UNK	working thirty four knots down the angle
0557:07	BOSS	six one zero winds are down the deck thirty five knots charlie spot seven
0557:29	BOSS	six one zero tower did you copy
0557:37	BOSS	charlie spot seven winds are down the deck thirty five knots
0557:40	H610	six one zero charlie spot seven
0557:44	BOSS	what's your e t a
0557:45	H610	sir we are still overhead executing the rescue we are able to fit a few more onboard
0557:50	BOSS	okay copy that
0557:56	PW30	three zero is three miles

End of Transcript.

*This portion of the re-recording is not entirely clear, but this represents the best interpretation possible under the circumstances.

Figure H-1. Air Traffic Controller Statement

AIR TRAFFIC CONTROLLER STATEMENT

The following is a report concerning the incident involving PW 33 (Aircraft ID number(s))

at _____ (location), _____ (city), _____ (state), 11/22/17 (month, day, year), 1430 (time) UTC

My name is (b) (3) (A), (b) (6) [redacted] (b) (3) (A), (b) (6) [redacted] (opr. init.)

I am an Air Traffic Control Specialist at CVN 76 (command name and location)

I was on duty in the CCA Branch

I was working Case I Marshal (position name/number), From 1300 (time on Position Log) UTC to ~~1430~~ 1500 (time off Position Log) UTC

SUMMARY – Provide a brief summary that will provide enough information to understand what occurred.

NOTE: Summarys shall be written in the first person: "I am," "I did," etc. Include only the facts: what you heard did or observed. DO NOT abbreviate proper wording: 10,000 feet, 180 degrees, northeast, aircraft, 1600 UTC, flight, etc.

PW 33 checked ~~into~~ in on Button 16 calling up for freedom marshal. When noone responded due to EMCON A7 PW33 called for Tiger Marshal. Noone responded. The Case one supervisor coordinated with me to talk on air if PW33 checked in again and noone responded. When PW33 checked in again I gave him the Case recovery the expected Bost recovery course and told him to report a gee me. I then told him to work his father and he reported being to the northwest for 20 miles. PW33 then told me he had a load report and I told him I was ready to copy. He then started off with seven passengers and 2000 pounds of Cargo and then he cut out. I told him to say again and he ~~reported~~ declared an emergency. I told him to say intentions. PW33 responded and declared

(b) (3) (A), (b) (6) [redacted]		PRINT NAME (First, Middle, Last) (b) (3) (A), (b) (6) [redacted]	
22NOV2017	RANK/RATE AC2	SERVICE USN	TELEPHONE NO

Figure H-1. Air Traffic Controller Statement

AIR TRAFFIC CONTROLLER STATEMENT

The following is a report concerning the incident involving PASSWORD 33 (Aircraft I.D. number(s))

at USS RONALD REAGAN (location) _____ (city) _____ (state) 22NOV2017 (month day year) APPROX. 1445 LOCAL UTC

My name is (b) (3) (A), (b) (6) (first - M.I. - last) (b) (3) (A), (b) (6) (rpr. ltr.)

I am an Air Traffic Control Specialist at USS RONALD REAGAN (CVN 76) (command name and location)

I was on duty in the CCA Branch

I was working CASE 1 SVP (position name/number), From APPROX 1430 (time on Position Log) LOCAL UTC to APPROX 1500 (time off Position Log) LOCAL UTC

SUMMARY – Provide a brief summary that will provide enough information to understand what occurred

NOTE: Summarys shall be written in the first person: "I am," "I did," etc. Include only the facts: what you heard did or observed. DO NOT abbreviate proper wording: 10,000 feet, 180 degrees, northeast, aircraft, 1800 UTC, flight etc.

CASE ONE EMCON A7 RECOVERY. CODS – PW 30 AND 33 – CHECKED IN APPROX. 1445 LOCAL W/ NO RESPONSE FROM TIGER MARSHAL. DIRECTED BY CO VIA ASST. AIR OPS OFFICER LCDR (b) (3) (A), (b) (6) TO RESPOND TO PASSWORDS. PW 33 DID NOT INITIALLY RESPOND TO MARSHAL – (b) (3) (A), (b) (6) – BUT DID TO SUBSEQUENT TRANSMISSIONS: INFORMED MARSHAL OF LOAD REPORT, WHICH HE BEGAN TO COPY. PW TRANSMISSION CUT OUT HALF WAY THRU, AND I INSTRUCTED (b) (3) (A), (b) (6) TO "SAY AGAIN". PW 33 SAID THEY WERE DECLARING EMERGENCY SO I INSTRUCTED (b) (3) (A), (b) (6) TO "SAY INTENTIONS / NATURE OF EMERGENCY" — THEY RESPONDED "DUAL ENGINE FAILURE". AT THIS TIME, RECOGNIZING MY LIMITATIONS / INEXPERIENCE, I CALLED FOR LT. (b) (3) (A), (b) (6) TO RELIEVE ME AND CALLED TOWER / AIR BOSS TO INFORM HIM. AFTER BEING PROPERLY RELIEVED, I ASSUMED MARSHAL CONTROL TO RELIEVE (b) (3) (A), (b) (6) AS A CASE 3 MARSHAL CONTROLLER UNTIL A SUBSEQUENT RELIEF COULD BE FOUND.

SIGNAT (b) (3) (A), (b) (6)		PRINT NAME (First, Middle, Last) AC2 (b) (3) (A), (b) (6)	
DATE 22NOV2017	RANK/RATE AC2 / E-5	SERVICE USN	TELEPHONE NO

5830
18 Jan 18

MEMORANDUM FOR THE RECORD

From: LT (b) (3) (A), (b) (6) JAGC, USN

Subj: SUMMARY OF INTERVIEW WITH CDR (b) (3) (A), (b) (6) USN, AND CDR (b) (3) (A), (b) (6) USN, ON 25 NOVEMBER 2017

1. The following is a summary of my interview with CDR (b) (3) (A), (b) (6) USN, and CDR (b) (3) (A), (b) (6) USN, on 25 November 2017 aboard USS RONALD REAGAN (CVN 76). CDR (b) (3) (A), (b) (6) is the RONALD REAGAN Air Officer and CDR (b) (3) (A), (b) (6) is the Assistant Air Officer. Both were present on the bridge of RONALD REAGAN when the report of Password 33 (PW 33) emergency status was received.

2. CDR (b) (3) (A), (b) (6) stated that PW 33 and PW 30 were supposed to recover with the normal cycle. They were delayed so they were moved to the end of the cycle. He stated that a female came over radio to Tower and said PW33 experienced an emergency, and that she had just seen it go into the water. The location was 15 nm NW of RRN.

3. CDR (b) (3) (A), (b) (6) identified the female on radio as the aircraft commander of PW 30 and Tower kept PW 30 on voice. Tower told PW 30 to lead 610 to the crash site, with a plan to recover PW 30 as soon as search and rescue (SAR) helicopters were on site.

4. CDR (b) (3) (A), (b) (6) stated that Helicopter Sea Combat Squadron TWELVE (HSC-12) aircraft 610 (H610) had been about to land on RONALD REAGAN when the ship received the emergency call from PW 30. H610 immediately departed for the crash site.

5. CDR (b) (3) (A), (b) (6) stated that there was no mayday call and that Tower never talked to PW 33, only PW 30.

6. CDR (b) (3) (A), (b) (6) stated that SAR helicopters were overhead on the crash site within ten minutes.

7. Both CDR (b) (3) (A), (b) (6) and CDR (b) (3) (A), (b) (6) stated that there had been nothing out of the ordinary with PW 33 or PW 30 during their approach or on previous flights.

(b) (3) (A), (b) (6)

Preliminary Analytical Study of C-2A Greyhound Ditching Flooding and Submerging Time

E2/C2 Fleet Support Team

1/31/2018

Table of Contents

References 3
Problem Description 3
Initial Conditions 4
Givens 4
Aircraft Weight 4
Cargo Volume 4
Damage Condition 4
Hatches and Doors 4
Pilot and copilot cockpit and port and starboard passenger ditching hatch configurations 5
System Functionality 5
Assumptions and Associated Reasoning 5
Settling Angle 5
Aircraft Volume 5
Equivalent total leakage area 8
Simplifications with Reasoning 9
The aircraft sinks at a constant angle 9
Constant flow leakage rates 9
Simplified geometry for buoyancy calculations 10
Calm Glassy Seas 10
Buoyancy 10
Analytical Approach 11
Theory and Analysis Discussion 11
Scenario 1 11
Scenario 2 13
Scenarios 3 through 6 14
Conclusions 16
Interpretation of study 16
Further study 17

List of Figures

Figure 1: Door, Hatch, and Cabin Outflow Valve Locations 4
Figure 2: Scanned to-Scale Shell Model 7
Figure 3: Aircraft Compartmentalized Volume Breakdown, Port Side 7
Figure 4: Aircraft Compartmentalized Volume Breakdown, Top View 8
Figure 5: Scenario 1, Flooded Volume vs Time to Sink 12
Figure 6: Scenario 2, 15 degrees Nose Down 13
Figure 7: Scenario 2, Flooded Volume vs Time to Sink 14
Figure 8: Scenarios 3 through 6, Effective Opening Area vs Flood Time 15

List of Tables

Table 1: Time for Complete Aircraft Submersion and Total Volume Flooding. (All values are estimated with +/- 25% uncertainty) 16

1. References:

A. Email from CDR (b) (3) (A), (b) (6) PMA-231 Deputy Program Manager, Modifications and Sustainment, to CAPT (b) (3) (A), (b) (6) PMA-231 Program Manager, dated 06JAN2018
B. A1-C2AHA-NFM-000, C-2A NATOPS Flight Manual Navy Model C-2A dated 6/15/2011
C. Form OMB No. 07040186, Weight and Balance Clearance Form F – Transport, BUNO 162175 22NOV17
D. Email from CAPT (b) (3) (A), (b) (6) Commanding Officer of the USS Blue Ridge, to (b) (3) (A), (b) (6) E2/C2 Fleet Support Team Subsystems Team Lead, dated 08JAN2018
E. NAVAIR A1-C2AHA-SRM-040, Organizational, Intermediate and Depot Maintenance Structural Repair with Change 5 dated 12/1/2015
F. NAVAIR A1-C2AHA-410-200, Organizational Maintenance, Utility and Environmental Systems dated 10/1/2017
G. Calculation of Flow of Air and Diatomic Gases, (b) (3) (A), (b) (6) June 1946
H. AD739687, Aircraft Cabin Air Leakage Rate, Maximum Allowable: Derivation of, January 1972
I. MIL-E-18927, Environmental Control Systems, Aircraft, General Requirements for

2. Problem Description: E2/C2 Fleet Support Team (FST) Subsystems Engineering Code was asked to support the VRC-30 Det 5 BUNO 162175 22NOV17 C-2A JAGMAN MISHAP investigation per reference (A) by responding to the following questions:

a. How long should have C-2A BUNO 162175 remained afloat had the aircraft not been damaged upon ditching?
b. What amount of damage would be necessary to produce the observed flooding rates of 15 to 120 seconds (two minutes)?

Many, but not all, naval aircraft have a ditching analysis performed when the respective platform is new. Had such an analysis been completed for the C-2A, it would have been provided to NAVAIR Crew Systems who would then have developed an egress plan based on the amount of time that the aircraft is expected to float. Such an analysis could not be located by the E2/C2 FST, NAVIAR Subsystems (Code 4.3.5), NAVAIR Structures, (Code 4.3.3), or NAVAIR Crew Systems (Code 4.6), likely due to the age of the C-2A platform. Reference (B) paragraph 15.9 includes a ditching discussion and procedures, but specifies that no C-2A ditching tests have occurred to-date for the C-2A aircraft.

The contents of this report provide an expected time afloat analysis for BUNO 162175 given reported initial conditions while making several assumptions and simplifications. Assumptions and simplifications were necessary given the limited amount of data about the event and the time frame required to support the JAGMAN Mishap Investigation.

The analysis was performed using six different probable scenarios that study time to flood and submerge the aircraft using available information about the event and a number of failures that could have occurred. Given more time and/or a desire for additional scenarios to be studied, especially after recovery of the wreckage, this analysis can be improved upon (see section 5.b).

3. Initial Conditions:

a. Givens:

1. **Aircraft Weight:** Reference (C) weight and balance clearance form was provided for the investigation and estimated the aircraft total weight including fuel, cargo, and passengers upon landing to be 49,000 lbs.
2. **Cargo Volume**: An estimate of 30 ft^3 was provided by CAPT [redacted] per reference (D) based on the cargo volume loaded.
3. **Damage Condition:** Outer wings and engines remained attached. Although some damage to the wings and pylons is expected, information provided to the FST based on survivor statements indicate that they remained largely intact.
4. **Hatches and Doors:** The C-2A Greyhound has 7 total egress hatches/doors as follows per reference (E) Figure 1 below:
    1. Pilot's ditching hatch (21"x21", Area 3ft^2)
    2. Copilot's ditching hatch (21"x21", Area 3 ft^2)
    3. Port fuselage ditching hatch (32"x22", Area 4.9 ft^2)
    4. Starboard fuselage ditching hatch (32"x22", Area 4.9 ft^2)
    5. Bailout (belly) hatch (29"x27", Area 5.4 ft^2)
    6. Main entrance hatch (MEH) (60"x27", Area 11.25 ft^2) -bleed air pressurized seal
    7. Center cargo door/ramp (197"x91", 124 ft^2) -bleed air pressurized seal

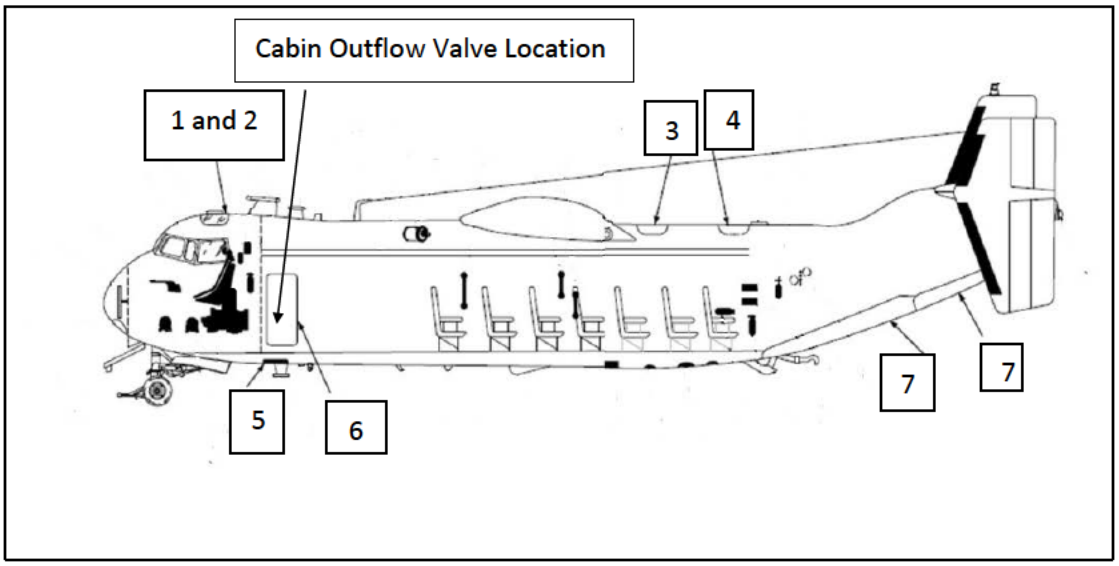

Figure 1: Door, Hatch, and Cabin Outflow Valve Locations

5. **Pilot and copilot cockpit and port and starboard passenger ditching hatch configurations:** The pilot ditching hatch and both starboard and port ditching hatches were opened either intentionally by the aircrew or during the ditching event.
6. **System Functionality:** No engine power, and therefore no bleed air, was available to pressurize the inflatable seals.

b. **Assumptions and Associated Reasoning**:

Several assumptions were required to perform the analyses. Assumptions were generally made in such a way as to result in the longest float time. The following is a summary of the assumptions and the reasoning:

1. **Settling Angle:** The aircraft settled at approximately 10-20 degrees nose down when it stopped forward progress. Although there have been many scale model ditching behavior tests on various aircraft platforms, there have been very few full scale aircraft ditching tests. The best C-2A analog that could be found was an instrumented B-24 Liberator ditching. The aircraft weighed 44,100 lbs, was a high wing and tail design, had a large empty buoyant volume of the bomb bays, and touched down at 97 miles per hour. After examining this case and other available references, high wing aircraft usually settle nose down. Initial calculations using the center of gravity (CG) reported in reference (C) indicate that a settling angle of 20 degrees would leave the cockpit ditching hatches submerged as soon as the aircraft came to rest. Since a pilot egressed through a cockpit ditching hatch, the cockpit ditching hatches could not have been initially submerged. The ideal case, Scenario 1, was performed with a pitch angle of zero. Scenarios 2 through 6 were performed at an initial angle of 15 degrees nose down as shown in Figure 6.
2. **Aircraft Volume:** The aircraft volume was estimated using a scanned to-scale shell model of a C-2A shown in Figures 2 through 4. The unpressurized nose landing gear wheel well and environmental control system (ECS)/auxiliary power unit (APU) equipment bays were assumed already flooded so volume was withheld from the buoyant volume consideration. It has been observed that during the last phase of a water landing, the aircraft's nose will dive into the water and stop forward progress which would rapidly flood the entire cavity up to the pressure bulkhead. It is unlikely that the nose landing gear doors would have survived impact and the forward motion of the aircraft would have forced water into this portion of the fuselage flooding it immediately.

   Displaced volume was calculated by dividing the reference (C) weight of the aircraft by the density of seawater. This is the volume of aircraft below the water line assuming an ideal case with no leakage and it is used as a baseline for initial flooding conditions.

Floodable volume considered for flood duration calculations was based on sections of the aircraft that provide significant buoyancy. This consists of the pressurized fuselage but excludes the fuel volume in the center wing section. Fuel and fuel tank buoyant volume will not add significant buoyancy to the aircraft. Scenario 1 differs in floodable volume from the other cases due to its zero pitch angle during sinking and because the wings will provide more significant buoyancy than when the aircraft sinks at 15 degrees nose down with wings outside the water. The outer wings are not sealed for pressure or to contain fluid so they will flood significantly faster, providing only limited initial buoyancy. This is balanced by the center wing section fuel tank which would likely flood much slower due to it being a well-sealed volume. The total volumes for the flooding calculations of Scenarios 2 through 6 differ from Scenario 1. Scenario 1 includes the wing volume while the other scenarios only include the pressurized fuselage. This was considered appropriate due to the lower leakage rate and the aircraft attitude in Scenario 1. None of the scenarios included the horizontal or vertical stabilizers. Their construction is similar to the outer wing section, have a similar volume, and they are also expected to flood rapidly as they are not sealed. The outer wing and stabilizers are not expected to reach the water at the same time in any of the scenarios. Rapid buoyancy loss in the outer wing would be offset by the stabilizers and would cancel out.

Scenarios 2 through 6 also differ from Scenario 1 due to subtracting 30 ft^3 for cargo, 8.2 ft^3 for the three Sailors remaining in the aircraft, and 23.4 ft^3 for the estimated nine sets of passenger seats (18 seats total) for the eight passengers and one air crewman onboard the aircraft. The propeller volume is considered negligible and the nacelle volume is not considered applicable for fill volume because most of the nacelle is filled with equipment, i.e. engines, quick engine change (QEC) components, etc., is not a sealed area, and is likely to have suffered major damage to the landing gear doors and would have flooded immediately. Fuel volume was subtracted from the wing volume in all cases, significantly decreasing wing buoyancy. Internal aircraft structure, avionics, and mechanical system component volumes were not subtracted from the total fill volume in any scenario.

Scenario 1 uses 2,838 ft^3 floodable volume and Scenario 2 through 6 use 2,343 ft^3 floodable volume. It is estimated that there is a +25% uncertainty in total flooding volume. The volume required to submerge the aircraft is the displaced volume subtracted from the floodable volume and is annotated in the Scenario 1 and 2 charts as a red asterisks.

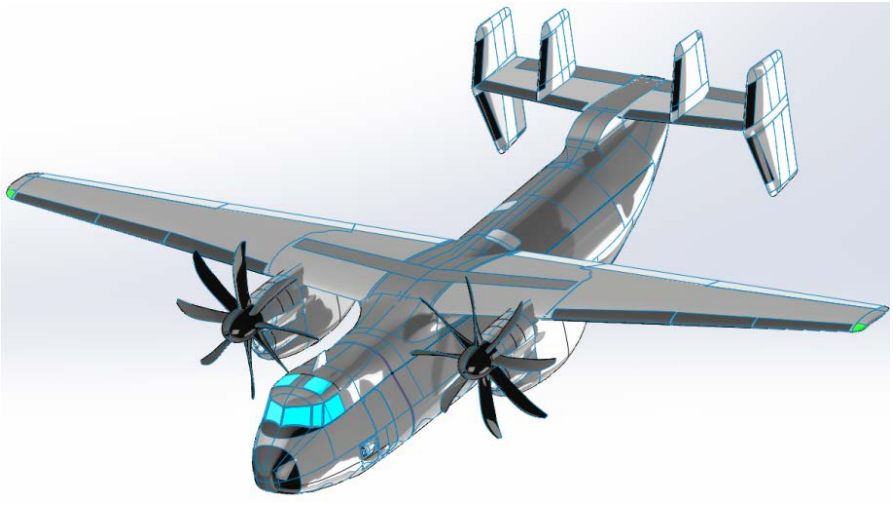

Figure 2: Scanned to-Scale Shell Model

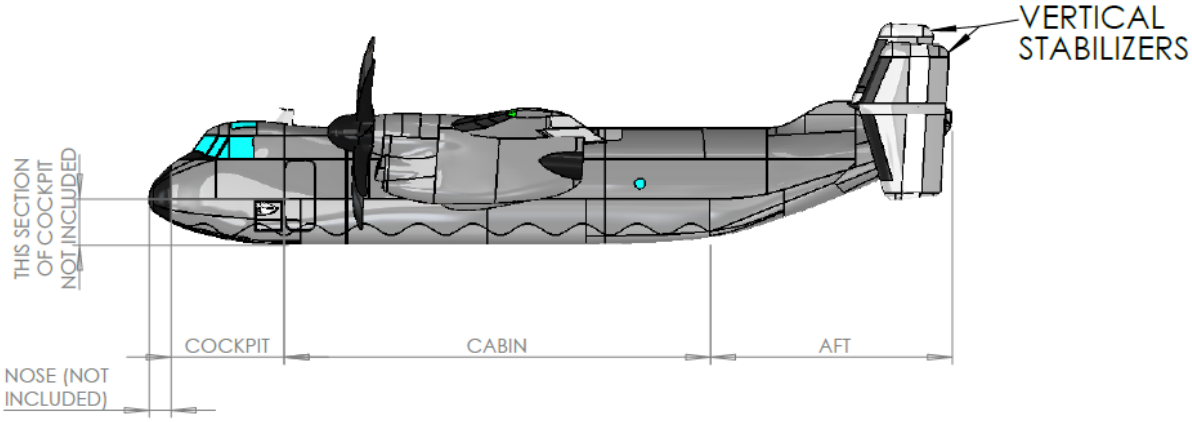

Figure 3: Aircraft Compartmentalized Volume Breakdown, Port Side

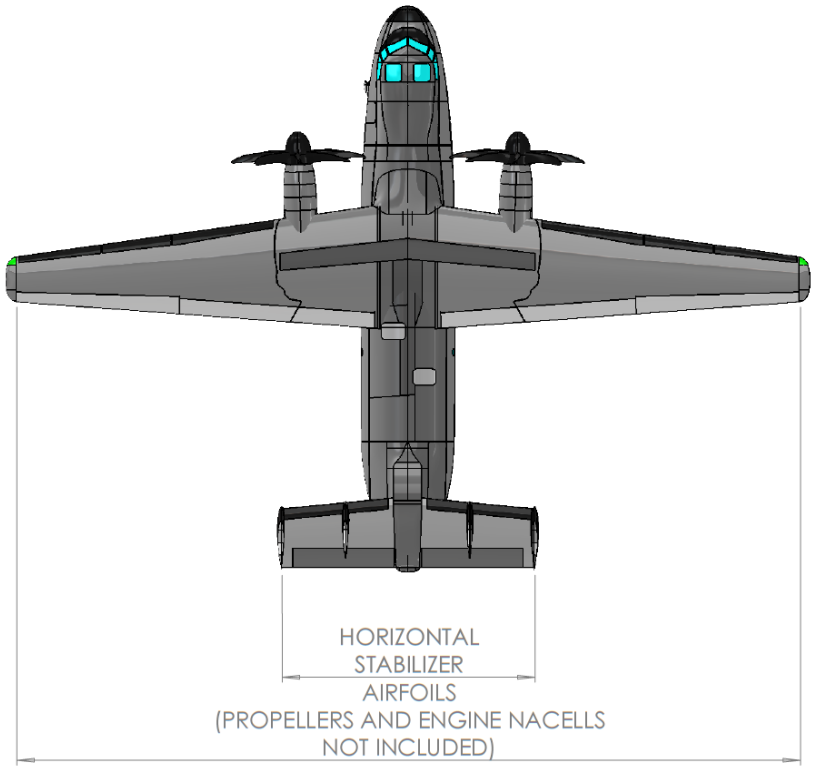

Figure 4: Aircraft Compartmentalized Volume Breakdown, Top View

3. **Equivalent total leakage area:** The total undamaged equivalent area for inflatable seals and other water penetrable areas were calculated to be 0.34 ft^2 which was used to determine how long the aircraft could have stayed afloat in Scenario 1 and is added as a baseline leak rate for the other scenarios. As the analysis confirms, as the total effective leakage area increases, the modeled sink time decreases. Equivalent area was determined by using the allowable air leakage of the aircraft and adding additional areas that would leak significantly once the aircraft lost power. Under ideal C-2A conditions, the equivalent total area was calculated using references (F) and (G) and by adding assumed opening areas likely to be breached by water. Although the C-2A is supposed to have a maximum allowable airframe leakage rate of 25 lb/min during cabin leakage testing per reference (F), the majority of fleet aircraft, even those leaving depot maintenance, exceed 40 lb/min per subject matter experts and the baseline leakages is assumed to be 40 lb/min for the calculations. The C-2A fleet historically has experienced cabin pressurization issues per reference (H)

due to the fact the cabin leaks above the design limits set forth by reference (I). Allowable maximum cabin leakage is measured with cabin pressurization valves closed, hatches and doors closed, and MEH and center ramp/cargo door seals fully inflated. During ditching, the seals would have been depressurized due to the loss of engine bleed air. The effective ramp area was halved for this analysis to provide an average leakage area as the aircraft sank because the majority of ramp seals were likely above the waterline in the assumed 15 degree nose down pitch angle. The air gaps in the deflated ramp/cargo door seals were calculated to have an area of approximately 18 in^2 and the gap in the main entrance hatch seal an area of approximately 10.9 in^2. In addition to the ramp and MEH seals, the two cabin outflow safety valves, located starboard of the cockpit step in the forward lower area of the pressurized fuselage as shown in Figure 1, have a combined leakage area of approximately 19.2 in^2. The cabin outflow safety valves vent directly to atmosphere when regulating cabin air pressure per the C-2A's cabin pressure schedule shown in Reference (F). They would likely allow water intrusion once submerged because water pressure from the outside would force the valves open.

c. Simplifications with Reasoning:

A number of simplifications were required to perform the analysis. As with the assumptions, the simplifications were either considered to be analysis neutral or would result in a longer float time. The following is a summary of the simplifications used:

1. **The aircraft sinks at a constant angle:** The aircraft will not sink at a constant angle because most of the buoyant volume of the aircraft is aft of the wings and the center of buoyancy will change as the aircraft floods. The change in time for the aircraft to sink based on changing geometry is not estimated to make a large impact to flood time unless it exposes a large opening in the pressurized portions of the aircraft (an open hatch or structural damage) to water. In Scenario 1, we consider that the aircraft will sink in an ideal level orientation. In Scenarios 2 through 6, we consider the aircraft will sink without listing from wing to wing at a constant 15 degree nose down angle.
2. **Constant flow leakage rates:** In practice, the leak rate through any opening will change with pressure differentials between two sides of the aircraft opening. The flooding rate from an opening on the side of the fuselage will increase with depth until the water level inside the aircraft reaches the opening. At this point, the flow rate will become effectively constant given the nearly symmetric geometry of the pressurized fuselage. To simplify different flooding scenarios, the flow rate through openings of different sizes were modeled using a constant flow rate calculated using a weighted average of the rates as the aircraft submerges.

Flow was further simplified by combining effective leakage area to one or two openings instead of modeling leakage that may be coming from many different openings of varying sizes and geometry. Actual aircraft leakage locations will be throughout the sealed pressurized cabin seams, seals, and fasteners. Leakage will increase as the aircraft submerges in water as more leak paths submerge.

3. **Simplified geometry for buoyancy calculations**: The actual aircraft geometry was used for determining depth of openings and flow but simplified geometry was used for initial buoyancy calculations. The actual geometry of the sinking object isn't relevant to finding the initially submerged volume, only the density of seawater and the weight. As long as the weight of the buoyant volume is greater than the weight of the object in the fluid, the body will float regardless of geometry.
4. **Calm Glassy Seas:** Reports provided to the FST did not indicate seas were calm. Reports actually indicated 6 ft to 15 ft seas. The height of waves and their frequency would have a dramatic effect on the sink rate. 6 ft tall waves would easily peak above the cockpit ditching hatches allowing water to enter the aircraft in the assumed 15 degree nose down position of Figure 6. Waves would temporarily force additional openings in the structure below the surface due to aircraft inertial increasing the leakage rate with the opening is submerged. While aircraft depth undulation would seem to balance this out as the aircraft rises and falls with waves, the increased water entering the aircraft would keep it from rising as far as it would sink, resulting in a net increase in sinking speed. Tall, frequent waves, especially if they are cresting, may cause additional damage to aircraft structure causing an increase in effective leakage area and increasing flooding rate. Since the sink rate is so dependent on the wave size, frequency, and sea state, it was not included in the analysis. The addition of waves to any of the scenarios will result in the aircraft sinking faster.

5. **Buoyancy**: The horizontal and vertical stabilizers do not contribute significantly to buoyancy separately from the outer wings and only the pressurized fuselage experiences significant leakage.

   While sealed to an extent, other than the fuel tanks, the unpressurized portions of the aircraft are not designed to keep water out and are generally lighter structure. Any leakage into the fuel tanks would be relatively slow compared to the other unpressurized areas which are expected to flood relatively rapidly. As the outer wing completely floods, the stabilizers would be entering the water and the overall buoyancy loss and gain will offset. For the analyses, the stabilizers are ignored and the wing leakage rate is considered to be zero in all cases except Scenario 1.

The pressurized fuselage is the largest buoyant volume and is also most susceptible to damage and flooding if the aircraft ditches with the wings level. The buoyancy loss in the pressurized fuselage alone is sufficient to submerge the aircraft assuming that the outer wing and stabilizers don't provide significant buoyancy at the same time.

4. Analytical Approach

a. Theory and Analysis Discussion:

In order to answer the questions posed by reference (A), six scenarios were developed. The scenarios are intended to allow the comparison of aircraft damage after a water landing and assess aircraft flooding. The results and summary of the six scenarios can be found in Table 1 but will be discussed in more detail in this section. All six scenarios required initial buoyancy, aircraft volume, effective leakage area, and flow rate calculations. Initial buoyancy calculations were used to calculate an initial aircraft submerged volume and depth using aircraft estimated landing weight per reference (C), calculated aircraft volume, and the density of seawater. An approximate initial submerged depth was determined from the submerged buoyant volume (768 ft^3) and is required to determine the average flooding rate. An opening in the submerged portion of the aircraft experience a variable flooding rate dependent on both the depth and opening area. A greater depth or larger opening significantly increases the flooding rate. Equivalent aircraft leakage areas were calculated using subcritical flow equations and empirical tables per reference (G) and allowable cabin pressure leakage and pressures per reference (F). A script was created in MATLAB which calculated and plotted results for each scenario.

b. Scenario 1:

Scenario 1 was created to provide an approximate expected time to submerge a C-2A aircraft in a best-case situation. The aircraft was assumed to be undamaged and the crew to have egressed per NATOPS procedures. With the aircraft oriented in a pitch neutral position without wing to wing list, the ditching hatches would have had no effect on flooding rate except as an escape path for entrapped air. This case was calculated as if the entire fuselage and wing volume was leaking at the same rate as the fuselage. In reality, once the aircraft sinks to the point where the wings enter the water, the leakage rate would increase due to the increase in wetted surface area. Leakage rate increase is partially offset by a shallow aircraft orientation. It is expected that the actual time to sink would be up to 25% faster than calculated based on the assumptions made for the analysis. The calculated total aircraft effective leakage of 0.34 ft^2 was applied at an assumed depth of 4 ft, resulting in a 5.5 ft^3/s flow rate. The result is shown in Figure 5.

The red asterisk is the time to submerge and the end of the graph indicates the time to fill the entire aircraft volume given a constant leakage rate.

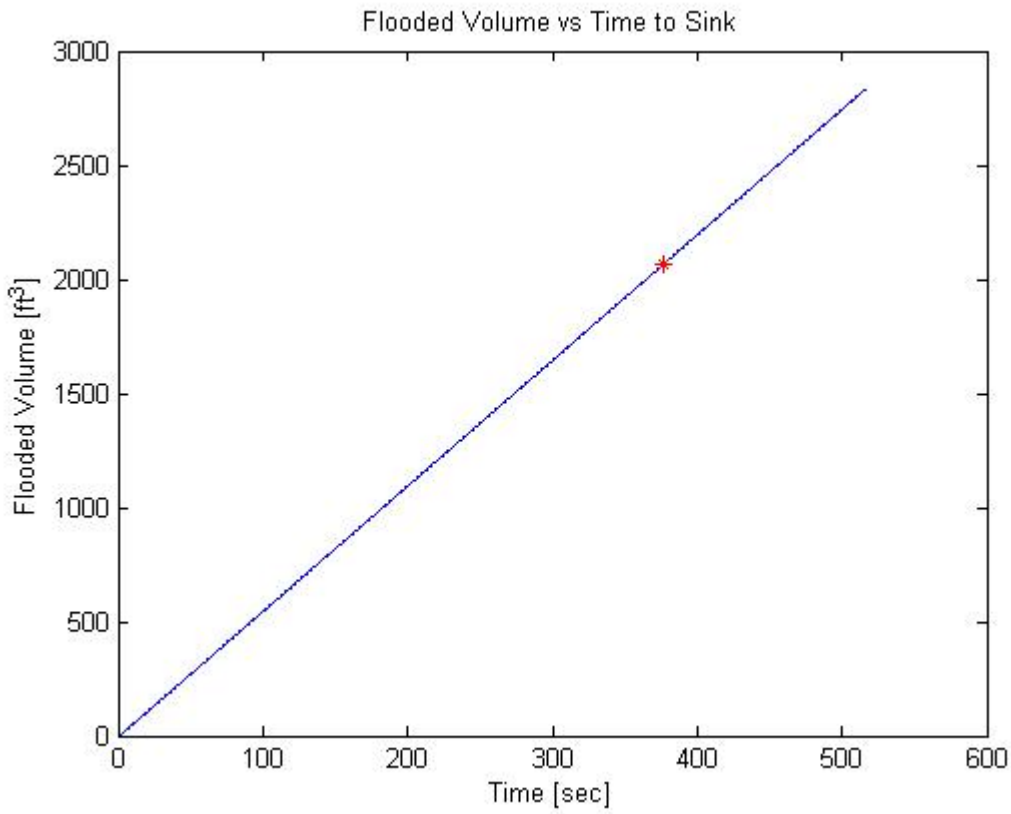

Figure 5: Scenario 1, Flooded Volume vs Time to Sink

Figure 5 shows a linear increase in flooded volume from the constant aircraft leakage in the ideal case. The time to submerge the aircraft is annotated with a red asterisk, approximately 6.5 minutes, and is considered the time available for aircraft evacuation. Results for the time for the aircraft to submerge and the time to fill the entire aircraft volume can be found in Table 1.

Figure 5 assumes a level aircraft. To estimate the time to sink at 15 degrees nose down, the Figure 5 graph can be read at the 1,011 ft^3 volume point and 40 seconds added. Reference (B) calls for the pilot and co-pilot to egress through their ditching hatches and 1,011 ft^3 is the volume of water that needs to be introduced into the aircraft at an angle of 15 degrees for the pilot and copilot ditching hatches to become submerged. Once water begins to flow into those hatches, the aircraft will sink in approximately 40 seconds. The total time for this to occur is approximately 4 minutes.

c. Scenario 2:

Scenario 2 was created as a best notional representation of what may have actually occurred to BUNO 162175 given the provided data. This scenario models the time to submerge the aircraft using estimated damage and the time for the open pilot ditching hatch to become submerged. Initially, a single flow rate is used assuming the aircraft is in the 15 degree nose down position. The estimated effective leakage area used is the 0.34 ft^2 baseline leakage plus an assumed rupture of the bailout hatch (equivalent area of 5.4 ft^2). Initial flow rate was determined using a calculated 4 ft as the initial aircraft immersion depth using an initial submerged buoyant volume (768 ft^3 below the water line) submerged at 15 degrees. The assumed aircraft initial position is shown in Figure 6 with the waterline indicated as a horizontal blue line. The aircraft would then be flooded with 1,011 ft^3 of seawater in about 11 seconds and the open pilot ditching hatch would begin allowing additional water into the aircraft. The additional flow would then increase the flow rate from 91.2 ft^3/s to 125.9 ft^3/s. Charted results of this scenario can be found in Figure 7 and time where the aircraft is shown to completely submerge at the red asterisk. Damage area results are shown in Table 1 with an estimated 25% uncertainty.

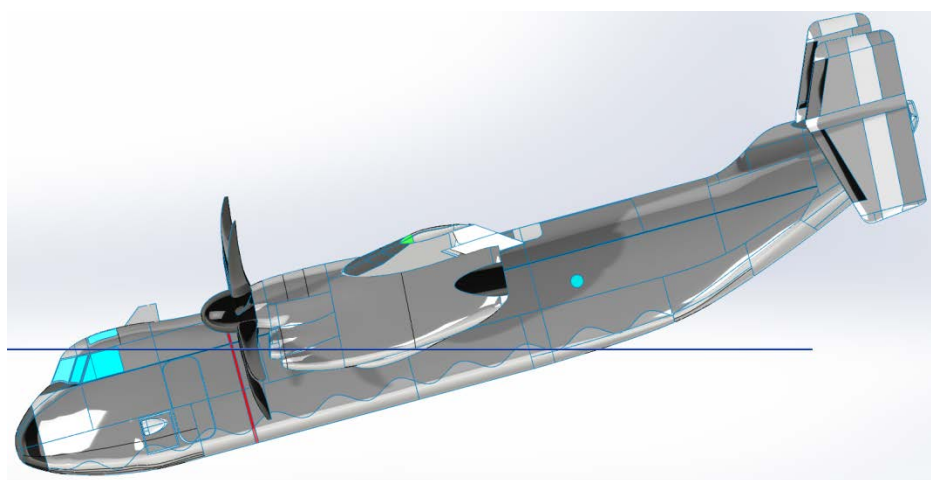

Figure 6: Scenario 2, 15 degrees Nose Down

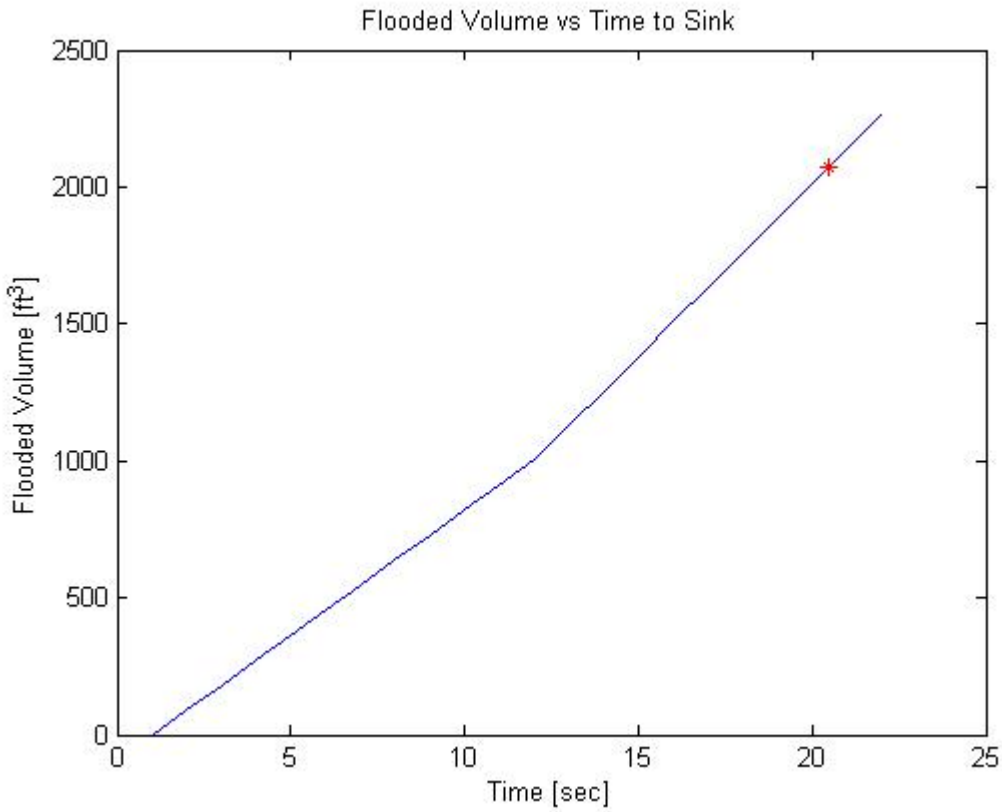

Figure 7: Scenario 2, Flooded Volume vs Time to Sink

d. Scenarios 3 through 6:

Scenarios 3 through 6 were created given a fixed time to submerge and calculating the required leakage area occurring at or near the bailout hatch of the aircraft while oriented at 15 degrees nose down. This is a reversed method from Scenarios 1 and 2 which calculated a time to flood and submerge given initial opening/leakage area. As with Scenario 2, the damage was initially submerged approximately 4 ft. Based on witness statements provided, the analysis was run at 15, 30, 60 and 120 seconds. The time to evacuate the crew and passengers is considered the time to submerge the aircraft. Dividing each discreet time of 15, 30, 60, and 120 seconds by the total averaged flow rate resulted in the volume required to submerge the aircraft. The effective nominal ECS leakage area of 0.34 ft^2 was included in the effective damage area for each discreet point. The actual area due to damage can be calculated by subtracting the nominal ECS leakage area of 0.34 ft^2 from each discreet point. Knowing the effective damaged area flow rate and the velocity entering the area, the effective damaged area can be calculated for the various times. Table 1 shows the effective areas representing damage at each discreet aircraft submerging time with an estimated 25% uncertainty.

Figure 8 shows the dramatic relationship between effective damage area and submerge times for Scenarios 3 through 6.

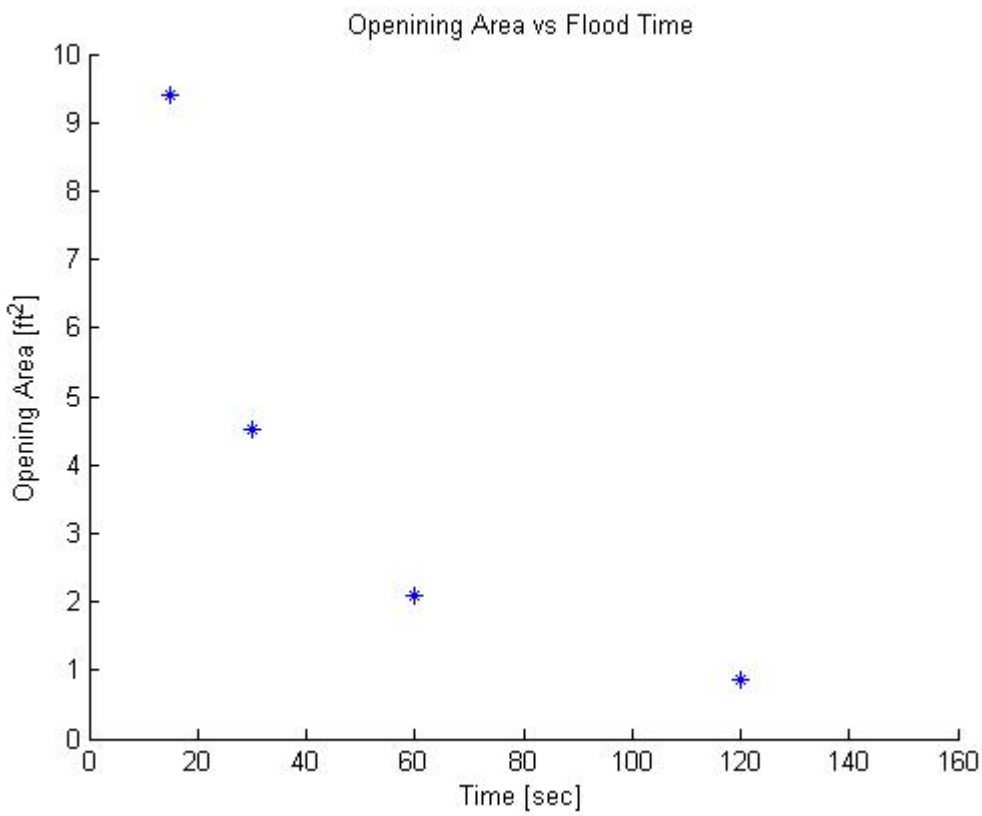

Figure 8: Scenarios 3 through 6, Effective Opening Area vs Flood Time

Table 1: Time for Complete Aircraft Submersion and Total Volume Flooding. (All values are estimated with +/- 25% uncertainty)

Scenario Description	Time to submerge aircraft (MIN:SEC)	Time to flood total aircraft volume (MIN:SEC)	Effective Aircraft Area Open to Water Intrusion (ft^2)
Scenario 1: Ideal ditch flooding case scenario. Calm seas. Initially level aircraft condition. No damage. Unopened doors/hatches except pilot, copilot, and port and starboard passenger ditching hatches. Unpressurized MEH and cargo door/ramp seals. Cabin outflow safety valves open.	6:28	8:37	0.34 ft^2
Scenario 2: Best notional representation of what may have actually occurred on BUNO 162175 given provided data. Events are notional at this time. Scenario 2 assumes damage area and flow rates of a ruptured bailout hatch (forward belly) with an increase in flow rate as one assumed open cockpit ditching hatch is submerged and flooded.	0:20	0:23	5.74 ft^2 for first 11 seconds (bailout hatch is 5.4 ft^2) +3 ft^2 (8.74 ft^2 total) for remaining time (pilot ditching hatch is 3 ft^2)
Scenario 3: Provides approximate expected damage area assuming a constant flow rate at the expected buoyant aircraft depth to submerge the entire aircraft in 15 seconds.	0:15	-	8.3 ft^2
Scenario 4: Provides approximate expected damage area assuming a constant flow rate at the expected buoyant aircraft depth to submerge the entire aircraft in 30 seconds.	0:30	-	3.96 ft^2
Scenario 5: Provides approximate expected damage area assuming a constant flow rate at the expected buoyant aircraft depth to submerge the entire aircraft in 60 seconds.	1:00	-	1.8 ft^2
Scenario 6: Provides approximate expected damage area assuming a constant flow rate at the expected buoyant aircraft depth to submerge the entire aircraft in 120 seconds.	2:00	-	0.73 ft^2

5. Conclusions

a. Interpretation of study:

Analysis of available ditching data indicates that a ditching aircraft of similar weight, balance, and geometry will contact the water nose up and will become level as it slows. Non-amphibious aircraft are not designed to touch down on the water so the nose will dive as the aircraft slows enough to drop out of plane. The aircraft will slow rapidly as the nose submerges. The nose will then rebound as a result of buoyant force and the

aircraft will come to rest at an angle dictated by the weight distribution around the center of buoyancy. As the C-2A undergoes this process, the nacelles, lower fuselage and nose section will experience sustained forces for which they were not designed. The unpressurized nose section which houses the ECS/APU bays likely flood rapidly as the aircraft comes to a stop and water is likely forced into the cabin through the cabin outflow safety valves. Additionally, any other damage to the bottom of the fuselage, to the belly bailout hatch for example, would act as a water scoop as the aircraft slows to a stop further adding to the initial volume of water in the aircraft. Due to the design of the belly bailout hatch and the way it is secured, it is unlikely that the bailout hatch fully opened during the ditching as modeled in Scenario 2. If it had fully opened, the aircraft would have submerged in 20 seconds which is faster than most witness statements which is based on information provided to the FST. It is more likely that the perimeter around the bailout hatch, rather than the hatch itself, was a significant contributor to leakage. Seals, outflow valves, and general damage would also result in increased leakage during the ditching procedure. It should be noted that the area of opening caused by damage significantly impacts the time for the aircraft to submerge as can be seen in Table 1. The MEH, for example, has an opening area of 11.25 ft^2 and in our assumed 15 degree nose down position shown in Figure 6 is already fully submerged. Scenario 3 of Table 1 shows that an opening area of 8.25 ft^2 results in a 15 second time to submerge the aircraft. Had the MEH been opened or ruptured, one could infer the time to submerge the aircraft would be less than 15 seconds because the MEH area is greater than 8.25 ft^2.

b. **Further study**:

Given additional time, information and/or desire to examine other scenarios, this study could be extended and improved upon. A limiting factor for the accuracy of the sinking C-2A simulation model was the limited time provided in order to draft this preliminary analytical study. The scanned to-scale shell model of the C-2A was helpful for approximating general lengths and volume. However, the internal components, not limited to bulkheads, general structure, and mechanical, electrical, and safety equipment could not be accounted for accurately towards volume calculations and were therefore omitted. Performing a laser scan inside of the C-2A would yield more accurate figures for volume calculation. Similarly, additional software tools and refinements could be developed. For example, NAVSEA is known to use General Hydrostatics (GHS) for simulation of solid models of ships during flooding and this could possibly be adapted to our scenarios. Additional effort could also be put into evaluating the effect of sea state, the shifting orientation of the aircraft, and other effects that were not taken into account in this analysis. As it stands, this analysis is a good first order approximation of the flooding for a C-2A aircraft under various conditions and is believed to be accurate to within +/- 25%.

REVIEWED BY:

[redacted]

[redacted]

Subsystems Project Lead
E2C2MPT FST.4, Code 43510

APPROVED BY:

[redacted]

Subsystems Team Lead
E2C2MPT FST.4, Code 43500

Commander, Task Force 70 Public Affairs

INFORMATION UP TO DATE AS OF 10:00 a.m. (JST)
NOVEMBER 24, 2017
Release #105-17

Search Ends for Sailors in C-2A Crash

PHILIPPINE SEA – The U.S. Navy ceased search and rescue operations at 10:00 a.m. Japan Standard Time on Nov. 24 for three Sailors not immediately recovered after a C-2A Greyhound crashed on the afternoon of Nov. 22.

USS Ronald Reagan (CVN 76) led the combined search and rescue efforts with units from the Japan Maritime Self-Defense Force (JMSDF). During the course of two days, seven U.S. Navy and JMSDF ships, three helicopter squadrons and maritime patrol aircraft covered nearly 1000 square nautical miles in the search for the missing sailors.

Eight Sailors were immediately recovered from the crash and transferred to Ronald Reagan for medical evaluation. All are in good condition at this time.

"Our thoughts and prayers are with our lost shipmates and their families," said Rear Adm. Marc Dalton, Commander, Task Force 70. "As difficult as this is, we are thankful for the rapid and effective response that led to the rescue of eight of our shipmates, and I appreciate the professionalism and dedication shown by all who participated in the search efforts."

The Sailors names are being withheld pending completion of next of kin notifications.

The following ships and aircraft assisted in the search efforts: U.S. Navy guided-missile destroyers USS Stethem (DDG 63), USS Chafee (DDG 90) and USS Mustin (DDG 89); the "Golden Falcons," MH-60S Seahawk helicopters from U.S. Navy Helicopter Sea Combat Squadron (HSC) 12; the "Saberhawks," MH-60R Seahawk helicopters from U.S. Navy Helicopter Maritime Strike Squadron (HSM 77); P-8 aircraft from the "Fighting Tigers" of U.S. Navy Maritime Patrol and Reconnaissance Squadron (VP) 8; P-3 Orion aircraft of the "Red Hook" U.S. Navy Maritime Patrol and Reconnaissance Squadron (VP) 40; JMSDF Helicopter Carrier JS Kaga (DDH 184) and JS Ise (DDH 182); JMSDF Akizuki-class destroyer JS Teruzuki (DD 116); JMSDF Murasame-class destroyer JS Samidare (DD 106), and JMSDF Hatakaze-class destroyer JS Shimakaze (DDG 172).

An investigation is currently underway.

###

5830
18 Jan 18

MEMORANDUM FOR THE RECORD

From: LT (b) (3) (A), (b) (6) JAGC, USN

Subj: SUMMARY OF INTERVIEW WITH LCDR (b) (3) (A), (b) (6) MC, USN, ON 25 NOVEMBER 2017

1. The following is a summary of my interview with LCDR (b) (3) (A), (b) (6) MC, USN, on 25 November 2017 aboard USS RONALD REAGAN (CVN 76). LCDR (b) (3) (A), (b) (6) is the Ship Surgeon for USS RONALD REAGAN (CVN 76). He has eight years of experience in trauma surgery.

2. At approximately 1500I on 22 November 2017, LCDR (b) (3) (A), (b) (6) received a call to report to the Medical Department to respond to a COD that had crashed in the water. He immediately reported and ordered preparation of emergency equipment, Medical Response Team (MRT), and beds for incoming patients.

3. Upon report of an inbound helicopter with Sailors rescued from the crash, LCDR (b) (3) (A), (b) (6) CAPT (b) (3) (A), (b) (6) (RONALD REAGAN Senior Medical Officer, "SMO"), and the MRT proceeded to the flight deck, where they saw three Sailors who had been rescued from Password 33 (PW 33). They appeared less injured than LCDR (b) (3) (A), (b) (6) was expecting, but as he approached, he saw they were wet and their eyes were bloodshot. He assessed that one of the Sailors was hypoxic (low oxygen saturation) and ordered members of the MRT to provide oxygen for that Sailor and to escort all three to the Medical Department to begin emergency care.

4. LCDR (b) (3) (A), (b) (6) proceeded to the flight deck to meet the second helicopter and continue the triage process. He described triage care as categorizing patients as Green, Yellow, Red, and Black. Green indicates no injuries requiring emergency care; Yellow indicates injuries that can be treated by Corpsmen; Red indicates life-threatening injuries that require Ship Surgeon intervention; and Black indicates deceased. In this case, there were six Green patients and two Yellow patients.

5. The five Sailors who arrived on the second helicopter were assessed to be four Green and one Yellow. The Yellow patient had a heavily swollen jaw, was holding his upper left arm, and had a cut to his head. Because this Sailor was talking, LCDR (b) (3) (A), (b) (6) assessed that he was sufficiently stable that he could be escorted to the Medical Department by the MRT with the other four Sailors. The Sailors were taken down to the Hangar Bay by Aircraft Elevator 2, with stretcher bearers standing by.

6. LCDR (b) (3) (A), (b) (6) and the SMO remained on the flight deck in anticipation of another helicopter with the final three Sailors who had been aboard PW 33. They observed the rig going toward an area of the ocean with dye and smoke. When no helicopter arrived, they attempted to get

information about what was going on and were told that part of the aircraft had been recovered, but no additional Sailors. They then proceeded to the Medical Department.

7. LCDR [redacted] ordered that the six patients in the Green category be monitored for six hours, with vitals taken hourly, before being released. All six had contusions and abrasions, and one required stitches to the inside and outside of his lip.

8. The hypoxic Sailor was tachycardic upon arrival. He required the highest level of oxygen provision possible short of intubation. His heart rate was assessed as dangerously elevated for a sustained period of time. He had a hematoma (goose egg) on the back of his head and bruising on his hand. He was retained in the Medical Department until 1800 on 23 November 2017, until his oxygen saturation levels were normal without oxygen provided and he could walk without his heart rate elevating significantly.

9. The Sailor with a swollen jaw received an X-Ray of his jaw from the oral-maxilofacial surgeon on RONALD REAGAN, which indicated his jaw was not fractured. An X-Ray of his arm indicated no fracture. He was kept in the Medical Department until 1140I on 24 November 2017 until he could eat soft foods, walks on his own, and had manageable levels of pain. The Sailor may experience long-term effects in his jaw.

10. None of the eight Sailors presented with symptoms of traumatic brain injury or concussion. They could recall the events of the crash and were emotional and teary but alert.

(b) (3) (A), (b) (6)

[redacted]

Commander, Task Force 70 Public Affairs
INFORMATION UP TO DATE AS OF 2230 (Japan Standard Time)
NOVEMBER 25, 2017
Release #106-17

Navy Identifies Sailors Lost in C-2A Crash

By Commander, Task Force 70 Public Affairs

PHILIPPINE SEA – After notifying their families that extensive search and rescue efforts had ended, the Navy identified Lt. Steven Combs, Aviation Boatswain's Mate (Equipment) Airman Matthew Chialastri and Aviation Ordnanceman Airman Apprentice Bryan Grosso Nov. 25 as the three Sailors lost in a C-2A Greyhound crash on Wednesday.

"Our thoughts and prayers are with the families of these Sailors," said Vice Adm. Phil Sawyer, commander of U.S. Seventh Fleet. "Their service and sacrifice will be lasting in Seventh Fleet and we will continue to stand the watch for them, as they did bravely for all of us."

USS Ronald Reagan (CVN 76) led combined search and rescue efforts with units from the Japan Maritime Self-Defense Force (JMSDF). Over the course of two days of continuous search efforts for the Sailors, ships and aircraft covered nearly 1000 square nautical miles.

"The thoughts and prayers of the entire team onboard Ronald Reagan go out to the families and friends of our fallen shipmates," said Capt. Michael Wosje, Commander, Carrier Air Wing Five (CVW 5). "We are thankful for our professional search and rescue teams and their incredible bravery. The entire Navy team is working together to investigate the cause of this mishap and we will remain focused on our mission to operate forward in a safe and professional manner to ensure peace and stability in the Indo-Asia-Pacific region."

Combs, a native of Florida, was assigned to the "Providers" of Fleet Logistics Support Squadron (VRC) 30 and embarked aboard Ronald Reagan as part of Carrier Air Wing Five. His previous duty assignments include the "Greyhawks" of Carrier Airborne Early Warning Squadron (VAW) 120, the Center for Security Forces Detachment Kittery Point, in Portsmouth, N.H., and Training Wing 4, in Corpus Christi, Texas. His awards include the National Defense Ribbon and the Navy Battle "E" Ribbon.

Chialastri, a native of Louisiana, was assigned to Ronald Reagan. His previous duty stations include USS America (LHA 6), Patrol Squadron Thirty (VP-30), the "Pro's Nest," in Jacksonville, Fla., and the Center for Security Forces Detachment Kittery Point, in Portsmouth, N.H. His awards include the National Defense Ribbon.

Grosso, a native of Florida was assigned to Ronald Reagan. His previous duty stations include the Naval Air Technical Training Center in Pensacola, Fla., and the Naval Recruit Training Center in Great Lakes, Ill. His awards include the National Defense Ribbon.

The C-2A Greyhound, assigned to VRC 30, crashed en route to Ronald Reagan Nov. 22 while operating in the Philippine Sea. The aircraft was carrying 11 crew and passengers at the time. Eight personnel were recovered on scene after the crash by U.S. Navy Helicopter Sea Combat Squadron (HSC 12).

An investigation is in progress.

###

Subscribe to Navy News Service
Search Navy.mil
Navy.mil Underway

U.S. Navy Maps Downed C-2A Greyhound

Story Number: NNS180216-08 Release Date: 2/16/2018 9:31:00 AM

A A A

From Commander, U.S. 7th Fleet Public Affairs

YOKOSUKA, Japan (NNS) -- A Navy-led mission aboard research vessel RV Petrel has mapped the wreckage of a C-2A Greyhound aircraft that crashed into the Philippine Sea en route to USS Ronald Reagan, Nov. 22, 2017.

Using the vessel's side scan sonar and remote operated vehicle (ROV) to survey the aircraft from Feb. 2-5, the team determined the aircraft lies on the ocean floor in two main sections, cockpit and fuselage, and that the C-2A's flight recorder or black box is still intact.

Planning continues for an upcoming salvage mission, during which every effort will be made to bring both sections to the surface despite very challenging environmental conditions. At a depth of 18,500 feet (more than three nautical miles) this will be the deepest aircraft recovery to date and the team with have to contend with several variables including deep water rigging and weather that may affect retrieval.

The aircraft was initially discovered late last year (Dec. 29) by a U.S. Navy Supervisor of Salvage and Diving (SUPSALV) team using a towed pinger locator (TPL-25) system aboard a different contracted vessel. In January, the Navy contracted RV Petrel to support debris field mapping and inform aircraft recovery planning.

RV Petrel is a 250-foot research and exploration vessel with advanced underwater equipment and technology, making it capable of exploring to more than 3.5 miles. A team of SUPSALV personnel embarked Petrel late January and returned to the crash site.

Assigned to Fleet Logistics Support Squadron (VRC 30) forward deployed to Japan, the C-2A aircraft was carrying 11 crew and passengers when it crashed. Eight personnel were recovered immediately by U.S. Navy Helicopter Sea Combat Squadron (HSC 12). For the next three days, Ronald Reagan led combined search and rescue for three Sailors with the Japan Maritime Self Defense Force (JMSDF), covering nearly 1,000 square nautical miles before ending the search.

An investigation is in progress.

For more information, visit www.navy.mil, www.facebook.com/usnavy, or www.twitter.com/usnavy.

For more news from Commander, U.S. 7th Fleet, visit www.navy.mil/local/c7f/.

Like 10K Tweet SHARE

RELATED PHOTOS

Download High Resolution

Official U.S. Navy file photo of a C-2A Greyhound.

August 23, 2017

RELATED CONTENT

US Navy Set to Survey Downed C-2A Greyhound - 1/25/2018
Downed C-2A Greyhound located in Philippine Sea - 1/5/2018
US Navy Prepares to Search for C-2A Aircraft - 12/8/2017
Ronald Reagan Holds Memorial Service at Sea - 11/27/2017
Navy Identifies Sailors Lost in C-2A Crash - 11/25/2017
Search Ends For Sailors in C-2A Crash - 11/23/2017
UPDATE: Search for Sailors Expands in Philippine Sea - 11/22/2017

Navy Social Media

To sign up for updates or to access your subscriber preferences, please click on the envelope icon in the page header above or click Subscribe to Navy News Service.

Home

About
Status of the Navy
Strategic Documents
Command Directory
Our Ships
Fact Files
Today in Naval History
Contact Us
Command Addresses (SNDL)
FAQ

Leadership
Secretary of the Navy
Under Secretary of the Navy
Chief Of Naval Operations
Master Chief Petty Officer Of The Navy
Chief Of Naval Personnel
Biographies
SES Biographies

News
Top Stories
Headlines
Feature Stories
Local Stories

Media
Video Gallery
Photo Gallery
Featured Galleries
All Hands Magazine
All Hands
All Hands Archive
Graphics Gallery
Art Gallery
Podcasts & RSS Feeds
2015 Owners and Operators
All Hands Radio

Links
Navy Reserve
Navy.mil Underway
Navy Personnel Command (NPC)
Navy SAPR
Navy EEO
Inclusion And Diversity
Navy Standard Integrated Personnel System (NSIPS)
My Navy Portal
Board of Corrections for Naval Records (BCNR)
Shift Colors-Navy Retiree Newsletter
Civilian Federal Careers
Navy / Marine Corps Relief
Affected Navy Family Assistance
Operations Security (OPSEC)
Navy Trademarks
Military One Source
USA.gov
U.S. Office of Special Counsel
Social Media Directory and Policy
US Navy App Locker
NCIS Report a Crime
Medal of Honor, USN Recipients
Joint Chiefs of Staff
Defense.gov
U.S. Army
U.S. Air Force
U.S. Marine Corps
U.S. Coast Guard
Naval History & Heritage Command
Navy Office of Community Outreach

Careers
Military Careers
Civilian Careers

Navy POD

Official Website of the United States Navy

Chief of Information
Attn: US Navy
1200 Navy Pentagon
Washington DC 20350-1200

FOIA - Privacy Policy/External Links - No Fear A
Accessibility/Section 5

No. SWP 4826

WORK CENTER REGISTER, CONTROL AND PROCESSING COPY

VIDS/MAF OPNAV 4790/60 (REV.5-85) S/N 0107-LF-001-5500

COPY 1 — 5 PART FORM — USE BALL-POINT PEN PRESS HARD

ENTRIES REQUIRED SIGNATURE — NONE LOGS REC ☐ ☐ ☐

LOCAL USE

ACCUMULATED WORK HOURS

NAME/SHIFT	TOOL BOX	DATE	MAN HOURS	ELAPSED MT
(b) (3) (A), (b) (6)	001SUP	17325	01	01
(b) (3) (A), (b) (6)	13-2	17325	01	

ACCUMULATED AWM HOURS

DATE	TIME	REASON	HOURS

REFERENCE

(H-Z) FAILED/REQUIRED MATERIAL

73 INDEX	08 F/P	09 AWP	10 A/T	11 MAL	14 MFGR	19 PART NUMBER	34 REF SYMBOL	41 QTY	PROJ	43 PRI	45 DATE ORD	49 REQ NO	53 DATE REC
	☐	☐											
	☐	☐											
	☐	☐											
	☐	☐											
	☐	☐											
	☐	☐											
	☐	☐											

FOLD

A23 WORK UNIT CODE	A25 ACTION CODE	A26 TRANS	A34 HABITUAL	A36 ACT TAKEN	A37 MAL CODE	A38 ITEM/UP	A41 MAN HOURS	A46 ELAPSED MT	7W INTERIM
33100	P4E	11	1	C	070	1	012	01	

TECHNICAL DIRECTIVE IDENTIFICATION: F99 CODE | F11 BASIS NO | F14 RY | F15 AN | F18 PART | F19 NT

ACWLEF 11 3175 H 13

F73 F10 | A18 SAFETY/ID SER | A19 METER | SE MPOR | F20 | INVENTORY F22 PERM UNIT CODE | F23

REPAIR CYCLE

	DATE	TIME	EOC
RECEIVED	B08 17325	B12 1300	B16
IN WORK	B18 17325	B22 1301	B27
COMPLETED	B35 17325	B34 1315	

AWAITING MAINTENANCE: B38 B39 HOURS | B43 B44 HOURS | B48 B49 HOURS

MAINTENANCE/SUPPLY RECORD

JOB STATUS	DATE	TIME	EOC
B53	B54	B58	B62
B65	B66	B70	B74
C08	C09	C13	C17
C20	C21	C25	C29
C32	C33	C37	C41
C44	C45	C49	C53
C56	C57	C61	C65
D08	D09	D13	D17

JOB CONTROL NUMBER: A28 ORD | A30 DIV | A32 SER | A34 SUF — A40 WORK CENTER: 13B

REMOVED/OLD ITEM: C08 MFGR | C12 SERIAL NUMBER | C16 PART NUMBER | C20 DATE REMOVED | C24 TIME/CYCLES | C28 TIME/CYCLES | C32 TIME/CYCLES

INSTALLED/NEW ITEM: C08 MFGR | C12 SERIAL NUMBER | C20 PART NUMBER | C36 TIME/CYCLES | C40 TIME/CYCLES | C44 TIME/CYCLES

DISCREPANCY

PART OF WAB BRACKET BROKEN OFF.
SERNO: M86545G

PILOT/INITIATOR

CORRECTIVE ACTION

REPLACE PART ON WAB BRACKET. IAW N-C2A-410-200
ALL SECURE AREA FOD FREE.

QA REQ ☐ QA REQ ☐ — INS SEN

(b) (3) (A), (b) (6) (b) (3) (A), (b) (6) (b) (3) (A), (b) (6)

CORRECTED BY (b) (3) (A), (b) (6) (b) (3) (A), (b) (6) (b) (3) (A), (b) (6) MAINT CONTROL (b) (3) (A), (b) (6)

MODEX 33 | PRL | SYSTEM / REASON WAB BRACKET | MCA ØXYE9Ø8

Figure 6-3: MAF (OPNAV 4790/60)

No. SWP 4826

WORK CENTER REGISTER, CONTROL AND PROCESSING COPY

VIDS/MAF OPNAV 4790/60 (REV.5-88) S/N 0107-LF-001-5900

COPY 1 5 PART FORM

USE BALL-POINT PEN PRESS HARD

ENTRIES REQUIRED SIGNATURE

NONE LOGS REC ☐ ☐ ☐

LOCAL USE

ACCUMULATED WORK HOURS

NAME/SHIFT	TOOL BOX	DATE	MAN HOURS	ELAPSED M/T
(b) (3) (A), (b) (6)	CDISUP	17395	.45	1
(b) (3) (A), (b) (6)	016-1-2	17325	.45	

ACCUMULATED AWM HOURS

DATE	TIME	REASON	HOURS

REFERENCE

(H-2) FAILED/REQUIRED MATERIAL

79 INDEX	08 F/P	09 AWP	10 A/T	11 MAL	14 MFGR	19 PART NUMBER	34 REF SYMBOL	41 QTY	PROJ	43 PRI	45 DATE ORD	49 REQ NO	53 DATE REC
	☐	☐											
	☐	☐											
	☐	☐											
	☐	☐											
	☐	☐											
	☐	☐											
	☐	☐											

FOLD

A22 WORK UNIT CODE	A23 ACTION ORG	A32 TRANS	A34 MAINTA	A38 ACT TAKEN	A39 MAL CODE	A43 ITEM/OP	A45 MAN HOURS	A46 ELAPSED MT	F08 INTERIM
	P4E	11.	1	B	956	1			☐

TECHNICAL DIRECTIVE IDENTIFICATION

F09 CODE	F11 BASIC NO	F16 RV	F15 AM	F17 PART	F18 NT

A4 TYPE EQUIP	A5 IDENTIFICATION NUMBER	A6 SECONDARY ID	A7 PART	A8 F10	A9 SAFETY/ID SER	A10 METER	A11 MPOR	A14	F21	INVENTORY F23 PROM UNIT CODE	F24
	A1 162175	14									

REPAIR CYCLE

	DATE	TIME	EOC
RECEIVED	B08 17325	B12 1730	B15 2
IN WORK	B19 17325	B23 1732	B27 2
COMPLETED	B28 17325	B34 1744	[redacted]

REMOVED/OLD ITEM

B38 NOMENCLATURE	B39 MFGR	B40 SERIAL NUMBER

B41 TIME REMOVED	B42 TIME/CYCLES	B43 TIME/CYCLES	B44 TIME/CYCLES

INSTALLED/NEW ITEM

B12 MFGR	B13 SERIAL NUMBER

G33 PART NUMBER

G38 TIME/CYCLES	G43 TIME/CYCLES	G48 TIME/CYCLES

AWAITING MAINTENANCE

B39 HOURS B43 B44 HOURS B48 B49 HOURS

MAINTENANCE/SUPPLY RECORD

JOB STATUS	DATE	TIME	EOC
B53	B54	B58	B62
B66	B66	B70	B74
C08	C09	C13	C17
C20	C21	C25	C29
C32	C33	C37	C41
C44	C45	C49	C53
C56	C57	C61	C65
D08	D09	D13	D17

DISCREPANCY

FGI BATTERY LOW.

(b) (3) (A), (b) (6) [redacted]

CORRECTIVE ACTION

REMOVED/REPLACED BATTERY. IAW A1-C4HA-610-200 WP 04 005

CF REQ ☐ CA REQ ☐ MR SCM

JOB CONTROL NUMBER

ABLORG	DAY	ACCER	SUF	A/C WORK CENTER
[illegible]	[illegible]	[illegible]	[illegible]	210

(b) (3) (A), (b) (6) (b) (3) (A), (b) (6) [redacted] (b) (3) (A), (b) (6) (b) (3) (A), (b) (6) [redacted]

↑ ↓ INDEX 33 P R I FURTHER DOCUMENT SYSTEM / REASON FGI BATTERY [redacted]

Figure 6-3: MAF (OPNAV 4790/60)

Last 10 A-Sheets

MODEX: 33 **Hot Seat Ind:** N **Oxy Qty:** 20 **Fuel Grade:** JP5 **Fuel Qty:** 12

Ordnance: PORT OIL USED: 20; PORT OIL CONSUMPTION: 3.44; STBD OIL USED: 107; STBD OIL CONSUMPTION: 18.44

Special Equipment: ROWS IN THE DECK; STUFFED; SECTION CAGE, TIRES INFLATED TO CARRIER PRESSURE; ARINC S/N: 2094; FLIGHT BOX: 350-1-2; ATAF BY: AWF1 GOTTENBOS

Plane Captain: AD2 R DANFORD **Safe for Flight:** ATCS R HOAG **Pilot:** LCDR J CHASE **Pilot Signature Date:** 18 NOV 2017 0737

MODEX: 33 **Hot Seat Ind:** N **Oxy Qty:** 16 **Fuel Grade:** JP5 **Fuel Qty:** 12

Ordnance: PORT OIL USED: 39 ; PORT OIL CONSUMPTION: 7.09; STBD OIL USED: 43; STBD OIL CONSUMPTION: 7.81

Special Equipment: ROWS IN THE DECK; STUFFED; SECTION CAGE, TIRES INFLATED TO CARRIER PRESSURE; ARINC S/N: 2094; FLIGHT BOX: 350-1-2; ATAF BY: AWF1 [redacted]

Plane Captain: PR2 [redacted] **Safe for Flight:** ATCS [redacted] **Pilot:** LT [redacted] **Pilot Signature Date:** 17 NOV 2017 0754

MODEX: 33 **Hot Seat Ind:** N **Oxy Qty:** 16 **Fuel Grade:** JP5 **Fuel Qty:** 10

Ordnance: GREEN, DAMA, ORDER CRYPTO FOR SECURE VOICE, GPS AND IFF LOADED AND VERIFIED BY AT3 [redacted] PORT OIL USED: 2; PORT CONSUMPTION: .046; STBD OIL USED

Special Equipment: 6 ROWS IN THE DECK; 0 STUFFED; 3 SECTION CAGE, TIRES INFLATED TO CARRIER PRESSURE; ARINC S/N: 2094; FLIGHT BOX: 350-1-2; ATAF BY: AWF1 [redacted]

Plane Captain: PR2 [redacted] **Safe for Flight:** AE1 [redacted] **Pilot:** LCDR [redacted] **Pilot Signature Date:** 14 NOV 2017 0713

MODEX: 33 **Hot Seat Ind:** Y **Oxy Qty:** 9 **Fuel Grade:** JP5 **Fuel Qty:** 9

Ordnance: GREEN, DAMA, ORDER CRYPTO FOR SECURE VOICE, GPS AND IFF LOADED AND VERIFIED BY AT3 [redacted] PORT OIL USED: 0; PORT CONSUMPTION: 0; STBD OIL USED: 0

Special Equipment: 6 ROWS IN THE DECK; 0 STUFFED; 3 SECTION CAGE, TIRES INFLATED TO CARRIER PRESSURE; ARINC S/N: 2094; FLIGHT BOX: 350-1-2; ATAF BY: AWF2 [redacted]

Plane Captain: **Safe for Flight:** LCDR [redacted] **Pilot:** LT S COMBS **Pilot Signature Date:** 13 NOV 2017 1640

MODEX: 33 **Hot Seat Ind:** N **Oxy Qty:** 17 **Fuel Grade:** JP8 **Fuel Qty:** 9

Ordnance: GREEN, DAMA, ORDER CRYPTO FOR SECURE VOICE, GPS AND IFF LOADED AND VERIFIED BY AT3 [redacted] PORT OIL USED: 0; PORT CONSUMPTION: 0; STBD OIL USED: 0

Special Equipment: 6 ROWS IN THE DECK; 0 STUFFED; 3 SECTION CAGE, TIRES INFLATED TO CARRIER PRESSURE; ARINC S/N: 2094; FLIGHT BOX: 350-1-2; ATAF BY: AWF2 [redacted]

Plane Captain: AWF3 [redacted] **Safe for Flight:** ATCS [redacted] **Pilot:** LCDR [redacted] **Pilot Signature Date:** 13 NOV 2017 1045

Last 10 A-Sheets

MODEX: 33 **Hot Seat Ind:** N **Oxy Qty:** 19 **Fuel Grade:** JP5 **Fuel Qty:** 10

Ordnance: PORT OIL USED: 13; PORT OIL CONSUMPTION: 4.64; STBD OIL USED:10 ; STBD OIL CONSUMPTION: 3.57

Special Equipment: 3 ROWS IN THE DECK; 2 STUFFED; 5 SECTION CAGE, TIRES INFLATED TO CARRIER PRESSURE; ARINC S/N: 2094; FLIGHT BOX: 350-1-2; ATAF BY: AWF2 [redacted]

Plane Captain: AE2 [redacted] **Safe for Flight:** ADCS [redacted] **Pilot:** LT S COMBS **Pilot Signature Date:** 11 NOV 2017 0914

MODEX: 33 **Hot Seat Ind:** N **Oxy Qty:** 16 **Fuel Grade:** JP5 **Fuel Qty:** 10

Ordnance: PORT OIL USED: 24; PORT OIL CONSUMPTION: 8.0; STBD OIL USED: 6.0 STBD OIL CONSUMPTION: 2.0.

Special Equipment: 6 ROWS IN THE DECK; 0 STUFFED; 3 SECTION CAGE, TIRES INFLATED TO CARRIER PRESSURE; ARINC S/N: 2094; FLIGHT BOX: 350-1-2; ATAF BY: AWF2 [redacted]

Plane Captain: AE2 [redacted] **Safe for Flight:** AE1 [redacted] **Pilot:** LT [redacted] **Pilot Signature Date:** 10 NOV 2017 1015

MODEX: 33 **Hot Seat Ind:** N **Oxy Qty:** 20 **Fuel Grade:** JP5 **Fuel Qty:** 10

Ordnance: PORT OIL USED: 12; PORT OIL CONSUMPTION: 4.82; STBD OIL USED: 12 STBD OIL CONSUMPTION: 4.82.

Special Equipment: 6 ROWS IN THE DECK; 0 STUFFED; 3 SECTION CAGE, TIRES INFLATED TO CARRIER PRESSURE; ARINC S/N: 2094; FLIGHT BOX: 350-1-2; ATAF BY: AWF2 [redacted]

Plane Captain: AD2 [redacted] **Safe for Flight:** AE1 [redacted] **Pilot:** LCDR [redacted] **Pilot Signature Date:** 07 NOV 2017 1007

MODEX: 33 **Hot Seat Ind:** Y **Oxy Qty:** 17 **Fuel Grade:** JP5 **Fuel Qty:** 8

Ordnance:

Special Equipment: ROWS IN THE DECK; STUFFED; SECTION CAGE, TIRES INFLATED TO CARRIER PRESSURE; ARINC S/N: 2094; FLIGHT BOX: 354-1-2; ATAF BY:

Plane Captain: **Safe for Flight:** LT [redacted] **Pilot:** LCDR [redacted] **Pilot Signature Date:** 06 NOV 2017 1420

MODEX: 33 **Hot Seat Ind:** N **Oxy Qty:** 17 **Fuel Grade:** JP5 **Fuel Qty:** 10.5

Ordnance: PORT OIL USED: 11; PORT OIL CONSUMPTION: 3.79; STBD OIL USED: 11; STBD OIL CONSUMPTION: 3.79.

Special Equipment: ROWS IN THE DECK; STUFFED; SECTION CAGE, TIRES INFLATED TO CARRIER PRESSURE; ARINC S/N: 2094; FLIGHT BOX: 354-1-2; ATAF BY: AWF1 [redacted]

Plane Captain: AD2 [redacted] **Safe for Flight:** AE1 [redacted] **Pilot:** LT [redacted] **Pilot Signature Date:** 06 NOV 2017 1207

Last 10 A-Sheets

MODEX: 33 **Heat Ind:** N **Oxy Qty:** 18 **Fuel Grade:** JP5 **Fuel Qty:** 10

Ordnance: PORT OIL USED: 24; PORT OIL CONSUMPTION: 7.5; STBD OIL USED: 4; STBD OIL CONSUMPTION: 1.25.

Special Equipment: ROWS IN THE DECK; STUFFED; SECTION CAGE, TIRES INFLATED TO CARRIER PRESSURE; ARINC S/N: 2094; FLIGHT BOX: 354-1-2; ATAF BY: AWF1 [redacted] (b) (3) (A), (b) (6)

Plane Captain: AE2 [redacted] (b) (3) (A), (b) (6) **Safe for Flight:** AE1 [redacted] (b) (3) (A), (b) (6) **Pilot:** LCDR [redacted] (b) (3) (A), (b) (6) **Pilot Signature Date:** 01 NOV 2017 1132

ORG : P
ORG Name : _P4E_DET_1
Aircraft Data: MODEX

NALCOMIS
SCHEDULED INSPECTIONS REPORT
21 NOV 2017 - 21 NOV 2018

DATE: 21 NOV 2017
TIME: 1336
REQ BY: AWF1 (b) (3) (A), (b) (6)

MODEX	BUNO/Serno	Assy Cd	Position Code	Task Name	Location	Interval	When Due Date	Units	Current	Remaining
33	03-D-010D-08	ACWA		STINGER ASSY 150 ARREST IMA INSP	PRIMARY	150 Lndg		300.000	255.000	45.000
	065	ACWA		448 DAY IMA CONTINIUOUS FLOW OXY	PRIMARY	448 Day	06 JUN 2018			197
	162175	ACWA		10 ARRESTS	PRIMARY	10 Lndg		1616.000	1605.000	11.000
		ACWA		112 DAY SPECIAL INSP	PRIMARY	112 Day	14 MAR 2018			113
		ACWA		ANNUAL COMPASS SYS CALIBRATION	PRIMARY	365 Day	30 MAR 2018			129
		ACWA		224 DAY SPECIAL INSP	PRIMARY	224 Day	11 APR 2018			141
		ACWA		14 DAY SPECIAL INSP	PRIMARY	14 Day	06 DEC 2017			15
		ACWA		A/C PMI 1 OR 2	PRIMARY	24 Month	08 MAY 2018			168
		ACWA		365 DAY SPECIAL INSP	PRIMARY	365 Day	24 JUL 2018			245
		ACWA		400 HOUR SPECIAL INSPECTION	PRIMARY	400 Hour		10019.100	9745.600	273.500
		ACWA		28 DAY SPECIAL INSP	PRIMARY	28 Day	20 DEC 2017			29
		ACWA		336 DAY SPECIAL INSP	PRIMARY	336 Day	10 OCT 2018			323
		ACWA		150 ARRESTS	PRIMARY	150 Lndg		1650.000	1605.000	45.000
		ACWA		56 DAY SPECIAL INSP	PRIMARY	56 Day	17 JAN 2018			57
		ACWA		100 CATS	PRIMARY	100 Cat		1636.000	1569.000	67.000
		ACWA		200 HOUR SPECIAL INSPECTION	PRIMARY	200 Hour		9819.100	9745.600	73.500
		ACWA		100 HOUR SPECIAL INSPECTION	PRIMARY	100 Hour		9819.100	9745.600	73.500
		ACWA		1200 HOUR SPECIAL INSP	PRIMARY	1200 Hour		10522.400	9745.600	776.800
		ACWA		7 DAY SPECIAL INSP	PRIMARY	7 Day	29 NOV 2017			8
		ACWA		448 DAY SPECIAL INSP	PRIMARY	448 Day	14 FEB 2018			85
	68510D1	ACWA		AIR BOTTLE (IMA) (8 YR HYDROSTATIC	PRIMARY	96 Month	31 DEC 2017			40
	A77736EK	ACWA		APU CONTAINER/VALVE 336 DAY INSP	PRIMARY	336 Day	10 OCT 2018			323
	EN0019217	ACWA		PORTABLE FIRE EXT 180 DAY INSP	PRIMARY	180 Day	20 MAY 2018			180
	EN0020238	ACWA		PORTABLE FIRE EXT 180 DAY INSP	PRIMARY	180 Day	20 MAY 2018			180
	M365442	ACWA		(IMA) 5 YR HYDRO TEST OXYGEN BOT	PRIMARY	60 Month	30 MAY 2018			190
	M365459	ACWA		(IMA) 5 YR HYDRO TEST OXYGEN BOT	PRIMARY	60 Month	31 MAY 2018			191
	MRF8L513-03	ACWA		TRUSS ASSY 150 ARREST IMA INSP	PRIMARY	150 Lndg		566.000	521.000	45.000
	P43-16188-1	ACWA		(IMA) PIN 150 ARREST INSP	PRIMARY	150 Lndg		150.000	105.000	45.000
	P43-16188-2	ACWA		(IMA) PIN 150 ARREST INSP	PRIMARY	150 Lndg		150.000	105.000	45.000
	P43-16195-1	ACWA		(IMA) PIN ASSY 150 ARREST INSP	PRIMARY	150 Lndg		150.000	105.000	45.000

ORG : [redacted]
ORG Name : [redacted]_P4E_DET_1
Aircraft Data: MODEX

NALCOMIS [redacted]
SCHEDULED INSPECT[redacted]S REPORT
21 NOV 2017 - 21 NOV 2018

DATE: 21 NOV 2017
TIME: 1336
REQ BY: AWF1 [redacted] (b) (3) (A), (b) (6)

MODEX	BUNO/Serno	Assy Cd	Position Code	Task Name	Location	Interval	When Due Date	Units	Current	Remaining
33	P4E-17221-1	ACWA		100 CATAPULT INSP/ RMVL FITTING TO'	PRIMARY	100 Cat		100.000	33.000	67.000
	P4E-17221-2	ACWA		100 CAT INSP/RMVL RECEIVER ASSEMI	PRIMARY	100 Cat		100.000	33.000	67.000
	P4E-17221-3	ACWA		(IMA) LAUNCH BAR PIN INSPECTION	PRIMARY	100 Cat		100.000	33.000	67.000
	40-07-01	BC02		56 DAY PASSENGER SEAT INSP (LH)	PRIMARY	56 Day	17 JAN 2018			57
	49-07-10	BC02		56 DAY PASSENGER SEAT INSP (RH)	PRIMARY	56 Day	17 JAN 2018			57
	49-07-12	BC02		56 DAY PASSENGER SEAT INSP (RH)	PRIMARY	56 Day	17 JAN 2018			57
	58-07-06	BC02		56 DAY PASSENGER SEAT INSP (RH)	PRIMARY	56 Day	17 JAN 2018			57
	62-07-09	BC02		56 DAY PASSENGER SEAT INSP (LH)	PRIMARY	56 Day	17 JAN 2018			57
	63-08-06	BC02		56 DAY PASSENGER SEAT INSP (RH)	PRIMARY	56 Day	17 JAN 2018			57
	64-07-05	BC02		56 DAY PASSENGER SEAT INSP (LH)	PRIMARY	56 Day	17 JAN 2018			57
	69-07-13	BC02		56 DAY PASSENGER SEAT INSP (LH)	PRIMARY	56 Day	17 JAN 2018			57
	69-07-14	BC02		56 DAY PASSENGER SEAT INSP (RH)	PRIMARY	56 Day	17 JAN 2018			57
	70-09-06	BC02		56 DAY PASSENGER SEAT INSP (RH)	PRIMARY	56 Day	17 JAN 2018			57
	74-07-13	BC02		56 DAY PASSENGER SEAT INSP (LH)	PRIMARY	56 Day	17 JAN 2018			57
	76-07-01	BC02		56 DAY PASSENGER SEAT INSP (LH)	PRIMARY	56 Day	17 JAN 2018			57
	121121751	CNEW		SPECIAL 400 HR PROP INSP	PRIMARY	400 Hour		10019.100	9745.600	273.500
		CNEW		SPECIAL 200 HR PROP INSP	PRIMARY	200 Hour		9819.100	9745.600	73.500
	121121752	CNEW		SPECIAL 400 HR PROP INSP	PRIMARY	400 Hour		10019.100	9745.600	273.500
		CNEW		SPECIAL 200 HR PROP INSP	PRIMARY	200 Hour		9819.100	9745.600	73.500
	0TH9876	THW	1	ENGINE 400 HOUR SPECIAL INSP	PRIMARY	400 Hour		9860.300	9586.800	273.500
		THW	1	ENGINE 1200 HOUR INSPECTION	PRIMARY	1200 Hour		10082.800	9586.800	496.000
		THW	1	ENGINE 100 HOUR SPECIAL INSP	PRIMARY	100 Hour		9660.300	9586.800	73.500
	1TH1587	THW	2	ENGINE 400 HOUR SPECIAL INSP	PRIMARY	400 Hour		12626.900	12353.400	273.500
		THW	2	ENGINE 100 HOUR SPECIAL INSP	PRIMARY	100 Hour		12426.900	12353.400	73.500
		THW	2	ENGINE 1200 HOUR INSPECTION	PRIMARY	1200 Hour		13261.400	12353.400	908.000
	000131361	YPFC		AIMD) 448 DAY INSP LOW PRESS REGS	PRIMARY	448 Day	09 DEC 2017			18
	00254	YPFC		AIMD) 448 DAY INSP LOW PRESS REGS	PRIMARY	448 Day	21 MAY 2018			181
	00654	YPFD		AIMD) 448 DAY INSP HIGH PRESS REG	PRIMARY	448 Day	06 APR 2018			136
	01970	YPFD		AIMD) 448 DAY INSP HIGH PRESS REG	PRIMARY	448 Day	06 APR 2018			136
	10718NR	YPGA		AIMD) 231 DAY INSP GCU-24()/A LOX C	PRIMARY	231 Day	11 JAN 2018			51

ORG :
ORG Name : _P4E_DET_1
Aircraft Data: MODEX

NALCOMIS
SCHEDULED INSPECTIONS REPORT
21 NOV 2017 - 21 NOV 2018

DATE: 21 NOV 2017
TIME: 1336
REQ BY: AWF1 (b) (3) (A), (b) (6)

MODEX	BUNO/Serno	Assy Cd	Position Code	Task Name	Location	Interval	When Due Date	Units	Current	Remaining
33	148A	YPPL		14 DAY INSPECTION	PRIMARY	14 Day	06 DEC 2017			15
	1966	YPPL		14 DAY INSPECTION	PRIMARY	14 Day	06 DEC 2017			15
		YPPL		AIMD) 448 DAY INSP VENTILATED SEAT	PRIMARY	448 Day	26 DEC 2017			35
	029	YPRB		28 DAY INSPECTION (LRU-13/A	PRIMARY	28 Day	20 DEC 2017			29
	057	YPRB		28 DAY INSPECTION (LRU-13/A	PRIMARY	28 Day	20 DEC 2017			29
	11	YPRB		28 DAY INSPECTION (LRU-13/A	PRIMARY	28 Day	20 DEC 2017			29
	28	YPRB		28 DAY INSPECTION (LRU-13/A	PRIMARY	28 Day	20 DEC 2017			29

ADB Work Order

Work C	CF Reqd	QA Reqd	System Reason
220	N	N	DD: 4/2/2017 ANNUAL COMP

Assy Cd	Buno/Serno	WO Status Cd	PILOT/INITIATOR	In Process Inspections	Modex
ACWA	162175	U	AZ2 (b) (3) (A), [redacted]	No	33

REPAIR CYCLE

	DATE	TIME	EOC		DATE	TIME	EOC		DATE	TIME
RECEIVED	30 MAR 2017	0925		IN WORK	30 MAR 2017	0926		COMPLETED	30 MAR 2017	1203

DISCREPANCY

COMPLY WITH ANNUAL COMPASS SYS CALIBRATION IN ACCORDANCE WITH REFERENCE: COMNAVAIRFORINST 4790.2 SERIES ; S/N = 162175 ***REBASE*** WAS DUE: 17AUG17 NOW DUE: 30MAR17 NEXT DUE: 30MAR18

CORRECTIVE ACTION

COMPLIED WITH SPECIAL 365 DAY COMPASS CALIBRATION SWING IAW A1-C2IMP-MRC-250, CARD 50, DATED 1FEB16. COMPASS SWING WITHIN LIMITS IAW A1-C2AHA-510-200, WP 035 01, DATED 1APR98. GROUND STANDBY COMPASS CALIBRATION PERFORMED AT NAF ATSUGI CHARLIE EAST COMPAS S ROSE. T/S P/N 2591553-901 S/N 5080180 UTILIZED. NEXT STANDBY COMPASS CALIBRATION DUE 30MAR18

CORRECTED BY	INSPECTED BY	MAINT CONTROL	MCN	JCN
AWF2 (b) (3) (A), [redacted]	AE2 [redacted] (b) (3) (A), (b) (6)	AE1 (b) (3) (A), [redacted]	0XDFQZU	P4E089059

Turnaround Maint. Records for MODEX 33 /BUNO 162175

1653

Received Date: 21 NOV 2017 0931 Completion Date: Maint Cntl Sig: [redacted]

Card No	Wc Cd	Tool Box #	Discrepancy	Corrected	Worker Signature
1	310	310-1-1	SEE ADB	☐	AWF3 [redacted]
2	310	310-1-1		☐	AWF3 [redacted]
3	310	310-1-1		☐	AWF3 [redacted]
4	310	310-1-1		☐	AWF3 [redacted]
5	310	310-1-1		☐	AWF3 [redacted]
6	310	310-1-1		☐	AWF3 [redacted]
7	310	310-1-1	MCN:0XYE903 UPPER AND LOWER WABS ARE BELOW LIMITS.	☐	AWF3 [redacted]
8	310	310-1-1		☐	AWF3 [redacted]
9	310	310-1-1		☐	AWF3 [redacted]
10	310	310-1-1	SEE ADB	☐	AWF3 [redacted]

Daily Maint. Records for MODEX 33 /BUNO 162175

Received Date: 21 NOV 2017 0929 Completion Date: 21 NOV 2017 1226 Maint Cntl Sig: ATCS [redacted]

Card No	Wc Cd	Tool Box #	Discrepancy	Corrected	Worker Signature
1.0	310	310-1-1		☐	AWF3 [redacted]
1.1	310	310-1-1		☐	AWF3 [redacted]
1.2	310	310-1-1		☐	AWF3 [redacted]
1.3	310	310-1-1		☐	AWF3 [redacted]
1.4	310	310-1-1		☐	AWF3 [redacted]
2.0	310	310-1-1		☐	AWF3 [redacted]
2.1	310	310-1-1		☐	AWF3 [redacted]
2.2	310	310-1-1	PORT NLG TIRE: 260 PSI STBD NLG TIRE: 260 PSI TPG: P4E-110-14-019	☐	AWF3 [redacted]
2.3	310	310-1-1		☐	AWF3 [redacted]
2.4	310	310-1-1		☐	AWF3 [redacted]
2.5	310	310-1-1		☐	AWF3 [redacted]
2.6	310	310-1-1	APU HOURS: 101	☐	AWF3 [redacted]
2.7	310	310-1-1	STBD MLG TIRE: 290 PSI TPG: P4E-110-14-019	☐	AWF3 [redacted]
3.0	110	110-1-2		☐	AD2 [redacted]
3.1	110	110-1-2		☐	AD2 [redacted]
3.2	110	110-1-2		☐	AD2 [redacted]
3.4	110	110-1-2		☐	AD2 [redacted]
3.5	110	110-1-2		☐	AD2 [redacted]

Maint. Records for MODEX /BUNO

Received Date: 21 NOV 2017 0929 **Completion Date:** 21 NOV 2017 1226 **Maint Cntl Sig:** ATCS [redacted]

Card No	Wc Cd	Tool Box #	Discrepancy	Corrected	Worker Signature
3.6	110	110-1-2		☐	AD2 [redacted]
3.7	110	110-1-2		☐	AD2 [redacted]
3.8	110	110-1-2		☐	AD2 [redacted]
3.9	110	110-1-2		☐	AD2 [redacted]
4.0	310	310-1-1		☐	AWF3 [redacted]
4.1	310	310-1-1		☐	AWF3 [redacted]
4.2	310	310-1-1		☐	AWF3 [redacted]
4.3	310	310-1-1		☐	AWF3 [redacted]
4.4	310	310-1-1		☐	AWF3 [redacted]
5.0	310	310-1-1		☐	AWF3 [redacted]
5.1	310	310-1-1		☐	AWF3 [redacted]
5.2	310	310-1-1	PORT MLG TIRE: 290 PSI TPG: P4E-110-14-019	☐	AWF3 [redacted]
5.3	310	310-1-1		☐	AWF3 [redacted]
6.0	110	110-1-2		☐	AD2 [redacted]
6.1	110	110-1-2		☐	AD2 [redacted]
6.2	110	110-1-2		☐	AD2 [redacted]
6.3	110	110-1-2		☐	AD2 [redacted]
6.4	110	110-1-2		☐	AD2 [redacted]

Maint. Records for MODEX /BUNO

Received Date: 21 NOV 2017 0929 Completion Date: 21 NOV 2017 1226 Maint Cntl Sig: ATCS [redacted]

Card No	Wc Cd	Tool Box #	Discrepancy	Corrected	Worker Signature
6.5	110	110-1-2		☐	AD2 [redacted]
6.6	110	110-1-2		☐	AD2 [redacted]
6.7	110	110-1-2		☐	AD2 [redacted]
6.8	110	110-1-2		☐	AD2 [redacted]
6.9	110	110-1-2		☐	AD2 [redacted]
7.0	310	310-1-1		☐	AWF3 [redacted]
8.0	310	310-1-1		☐	AWF3 [redacted]
8.1	310	310-1-1		☐	AWF3 [redacted]
8.2	310	310-1-1		☐	AWF3 [redacted]
8.3	310	310-1-1		☐	AWF3 [redacted]
8.4	310	310-1-1		☐	AWF3 [redacted]
8.5	310	310-1-1		☐	AWF3 [redacted]
9.0	13B	13B-1-2		☐	AME1 [redacted]
9.1	13B	13B-1-2		☐	AME1 [redacted]
9.2	13B	13B-1-2		☐	AME1 [redacted]
9.3	13B	13B-1-2		☐	AME1 [redacted]
3.10	110	110-1-2		☐	AD2 [redacted]
6.10	110	110-1-2		☐	AD2 [redacted]

Maint. Records for MODEX /BUNO

Received Date: 21 NOV 2017 0929 Completion Date: 21 NOV 2017 1226 Maint Cntl Sig: ATCS [redacted]

Card No	Wc Cd	Tool Box #	Discrepancy	Corrected	Worker Signature
10.0	310	310-1-1		☐	AWF3 [redacted]
10.1	310	310-1-1		☐	AWF3 [redacted]
10.2	310	310-1-1		☐	AWF3 [redacted]
10.3	310	310-1-1		☐	AWF3 [redacted]
2.8	310	310-1-1		☐	AWF3 [redacted]
3.3	110	110-1-2		☐	AD2 [redacted]
3.3A	110	110-1-2		☐	AD2 [redacted]
3.4A	110	110-1-2		☐	AD2 [redacted]
4A	120	LDDR-26		☐	AM1 [redacted]
4A.1	120	LDDR-26		☐	AM1 [redacted]
6.3A	110	110-1-2		☐	AD2 [redacted]
6.4A	110	110-1-2		☐	AD2 [redacted]

DEPARTMENT OF THE NAVY
FLEET LOGISTICS SUPPORT SQUADRON THREE ZERO
BOX 357114
NAVAL AIR STATION, NORTH ISLAND
SAN DIEGO, CALIFORNIA 92135-7114

4790
00
18 Jul 14

From: Commanding Officer, Fleet Logistics Support Squadron THREE ZERO
To: ATC(AW) (b) (3) (A), (b) (6) [redacted] USN

Subj: AUTHORITY TO SIGN THE CERTIFICATION OF SAFE FOR FLIGHT CONDITIONS

Ref: (a) COMNAVAIRFORINST 4790.2 (Series)
(b) COMNAVAIRSYCOMINST 13400.2

1. Per references (a) and (b), you are hereby authorized to sign subject forms and records necessary in the performance of your assigned duties. You are directed to familiarize yourself with the contents of references (a) and (b).

2. This designation will remain in effect until permanent change of station transfer or until terminated in writing.

(b) (3) (A), (b) (6)
[redacted]

Copy to:
MO
AMO
Quality Assurance
Service record

(b) (3) (A), (b) (6)

(b) (3) (A), (b) (6)

NALCOMIS OMA

e Window Help

Automated Aircraft Discrepancy Book

ORG: P4E BUNO: 162175 TMS: C-2A Next Phase: NONE Up/Down/Partial: P Cancel

MODEX: 33 Assy Cd: ACWA Basic Wgt: 36262 Acft Hours: 9,745.600 Last Flown: 18 NOV 2017 0805

Engine/APU/Prop Data | Open Work Orders | Awaiting Maintenance Control Approval | Closed Work Orders Last 10 Flights

Acceptance For Flight | Consumption | Inspections Near Due | Removals Near Due | Summary

Oxy Qty: 16.00

Fuel Grade: JP5

Fuel Qty: 12 K00

Hot Seat Ind: NO

Oil Grade	Oz. Of Oil Added	Multiplier	Description

Ordnance: PORT OIL USED: 62; PORT OIL CONSUMPTION: 11.07; STBD OIL USED: 120; STBD OIL CONSUMPTION: 21.42

Special Equipment: ROWS IN THE DECK; STUFFED; SECTION CAGE, TIRES INFLATED TO CARRIER PRESSURE; ARINC S/N: 2094; FLIGHT BOX: 350-1-2; ATAF BY: (b) (3) (A), (b) (6) [redacted]

Limitations: INTERIM FLIGHT CLEARANCE (IFC) FLIGHT ENVELOPE RESTRICTION IS GRANTED FOR ALL C-2 AIRCRAFT. ACCELERATION LIMITS ARE REDUCED TO 0 TO +2GS FOR SYMMETRICAL AND ASYMMETRICAL MANEUVERS. HEAVY GROSS WEIGHT ALLOWABLE POSITIVE

Pilot Signature Date: 00 0000 0000

Signatures:

I have personally inspected this aircraft IAW the applicable MRCs/checklists. Any discrepancies noted have been entered on a

Certification of safe for flight condition by MMCO, MO or MCO. If authorized, other

I've reviewed discrepancy reports of 10 previous flights, insured wgt. and balance data filed and accept this aircraft for flight.

Plane Captain: (b) (3) (A), (b) (6) [redacted]

Safe for Flight: (b) (3) (A), (b) (6) [redacted]

Pil (b) (3) (A), (b) (6) [redacted]

A-Sheet | Daily Maint. Record | Turnaround Maint. Record | Aircraft Limitations | Daily/Turnaround - Local Card Reference | Last 10 A-Sheets

DEPARTMENT OF THE NAVY **VOLUNTARY STATEMENT**	1. PLACE MCAS IWAKUNI JAPAN
	2. DATE 25 Jan 2018

I, PETTY OFFICER THIRD CLASS (b) (3) (A), (b) (6) [redacted], make the following free and voluntary statement to COMMANDER (b) (3) (A), (b) (6) [redacted], whom I know to be ASSISTANT TO CI OF INCIDENT INVOLVING C-2 TO CVN76 ON 22 NOV 2017.

I make this statement of my own free will and without any threats or promises extended to me. I fully understand that this statement is given concerning my knowledge of

I MANUALLY SIGNED THE PRINTED A-SHEET FOR BUNO 162175 (9745.6 AIRCRAFT HOURS, LAST FLOWN ON 18 NOV 2017 0805), ON 21 NOV 2017.

(b) (3) (A), (b) (6) [redacted]

DEPARTMENT OF THE NAVY **VOLUNTARY STATEMENT**	1. PLACE MCAS IWAKUNI JAPAN 2. DATE 25 Jan 2018

I, SENIOR CHIEF PETTY OFFICER (b) (3) (A), (b) (6) [redacted], make the following free and voluntary statement to COMMANDER (b) (3) (A), (b) (6) [redacted], whom I know to be ASSISTANT TO CI OF INCIDENT INVOLVING C-2 TO CVN76 ON 22 NOV 2017.

I make this statement of my own free will and without any threats or promises extended to me. I fully understand that this statement is given concerning my knowledge of

I MANUALLY SIGNED THE PRINTED A-SHEET FOR BUNO 162175 (9745.6 AIRCRAFT HOURS, LAST FLOWN ON 18 NOV 2017 0805), ON 22 NOV 2017.

(b) (3) (A), (b) (6)
[redacted]

DEPARTMENT OF THE NAVY **VOLUNTARY STATEMENT**	1. PLACE MCAS IWAKUNI JAPAN
	2. DATE 25 Jan 2018

I, LIEUTENANT COMMANDER (b) (3) (A), (b) (6) [redacted], make the following free and voluntary statement to COMMANDER (b) (3) (A), (b) (6) [redacted], whom I know to be ASSISTANT TO CI OF INCIDENT INVOLVING C-2 TO CVN76 ON 22 NOV 2017.

I make this statement of my own free will and without any threats or promises extended to me. I fully understand that this statement is given concerning my knowledge of

I MANUALLY SIGNED THE PRINTED A-SHEET FOR BUNO 162175 (9745.6 AIRCRAFT HOURS, LAST FLOWN ON 18 NOV 2017 0805), ON 22 NOV 2017.

(b) (3) (A), (b) (6) [redacted]

DEPARTMENT OF THE NAVY
FLEET LOGISTICS SUPPORT SQUADRON THREE ZERO
NAVAL AIR STATION, NORTH ISLAND, PO BOX 357114
SAN DIEGO, CA 92135-7114

1000
NI
11 Oct 15

From: Commanding Officer, Fleet Logistics Support Squadron THREE ZERO
To: ADCS(AW/SW) [redacted] USN

Subj: DESIGNATION AS DETACHMENT FIVE SENIOR ENLISTED LEADER AND LEADING CHIEF PETTY OFFICER

Ref: (a) COMNAVAIRFORINST 4790.2B
(b) OPNAVINST 3120.32D

1. Per references (a) and (b), you are hereby designated as VRC-30 Detachment FIVE Senior Enlisted Leader and Leading Chief Petty Officer. In that role, you are responsible not only to the Officer-in-Charge (OIC) of Detachment FIVE, but also to the Command Master Chief, and Commanding Officer of VRC-30 for all enlisted matters pertaining to Detachment FIVE Sailors. I encourage you to utilize the experience of my CMC to your advantage, and to the advantage of all detachment FIVE Sailors. Furthermore, I expect you to keep in regular contact with the CMC via email or phone, so that the squadron may assist detachment FIVE in every way possible to ensure a successful and safe deployment. Additionally, you are assigned collateral duties as the Detachment Quality Assurance Supervisor. You will carry out this duty in accordance with regulations and guidelines set forth in references (a) and (b).

2. In accordance with reference (a), you are authorized to:

a. Release aircraft safe for flight.

b. Sign aircraft logbooks and associated records.

c. Sign Support Equipment Custody and Maintenance History Record.

d. Issue Material Requisition Project/Priority Codes.

e. Direct aircraft defuel actions.

3. This designation and related authorizations will expire when properly relieved or when otherwise directed.

[redacted]

Copy to:
Service record

DEPARTMENT OF THE NAVY

VOLUNTARY STATEMENT

1. PLACE

HANGAR 721 MCAS IWAKUNI

2. DATE

5 MAR 2018.

I, ADCS(AW) (b) (3) (A), (b) (6) [redacted], make the following free and voluntary statement to CDR (b) (3) (A), (b) (6) [redacted], whom I know to be ASSISTANT TO THE COMMAND INVESTIGATION ICO PW33.

I make this statement of my own free will and without any threats or promises extended to me. I fully understand that this statement is given concerning my knowledge of

TOOL INVENTORY, AND COLLECTION OF TOUGH BOOKS (PUBLICATION LAPTOPS).

MAINTENANCE CONTROL COLLECTED PUBLICATION LAPTOPS BY QA AFTER NOTIFICATION OF PASSWORD 33 MISHAP ALONG WITH TOOL INVENTORY BY WORK CENTERS. NO MISSING TOOLS REPORTED.

(b) (3) (A), (b) (6) [redacted]

(b) (3) (A), (b) (6) [redacted]

OPNAV 5527/2 (DEC 1982)

DATE:

11/20/2017 15:32

TOTAL FLIGHTS / HOURS			
1st QUARTER FLIGHTS	92	1st QUARTER HOURS	162.9
FYTD FLIGHTS	92	FYTD FLIGHT HOURS	162.9

ENGINES		
	30	33
PORT ENGINE SERNO	**1TH1577**	**0TH9876**
PORT ENGINE HOURS	9878.2	9586.8
STBD ENGINE SERNO	**0TH9137**	**1TH1587**
STBD ENGINE HOURS	12996.2	12353.4

FLIGHT DATA		
MODEX	**30**	**33**
DATE LAST FLOWN	20-Nov-17	18-Nov-17
NEXT PMI DUE	AUG 2018	MAY 2018
COMPASS CALIBRATION	30-Mar-18	30-Mar-18
MONTHLY FLIGHTS	22	22
MONTHLY FLIGHT HOURS	37.5	39.4
AIRCRAFT TSN	12120.9	9745.6
AFH REMAINING	2879.1	5254.4
MONTHLY ARRESTS	10	11
TOTAL ARRESTS	2379	1605
ARRESTS REMAINING	1671	2445
MONTHLY CATS	10	11
TOTAL CATS	2343	1569
AF CATS REMAINING	657	1431
100 CATS REMAINING	67	67
MONTHLY LANDINGS	22	22
TOTAL LANDINGS	18784	17325
10 ARRESTS REMAINING	3	11
150 ARRESTS REMAINING	56	45

AIRCRAFT SPECIAL INSPECTIONS		
MODEX	**30**	**33**
7 DAY	29-Nov-17	29-Nov-17
14 DAY	29-Nov-17	6-Dec-17
28 DAY	13-Dec-17	20-Dec-17
56 DAY	13-Dec-17	17-Jan-18
112 DAY	7-Feb-18	14-Mar-18
112 DAY ERFS	29-Nov-17	
224 DAY	30-May-18	11-Apr-18
336 DAY	30-May-18	10-Oct-18
365 DAY (VADR DOWNLOAD)	9-Aug-18	24-Jul-18
448 DAY	21-Dec-17	14-Feb-18
100 HOUR	65.7	73.5
200 HOUR	65.7	73.5
400 HOUR	265.7	273.5
1200 HOUR	668.1	776.8
200 HOUR PROP (PORT)	65.7	73.5
200 HOUR PROP (STBD)	65.7	73.5
400 HOUR PROP (PORT)	265.7	273.5
400 HOUR PROP (STBD)	265.7	273.5

AIRFRAME INSPECTIONS

NOMENCLATURE	CYCLE	30 REMAIN	33 REMAIN	NOTES
TOWLINK FITTING	100	67	67	RET T1760
TOWLINK PIN	100	67	67	RET T4228
RECEIVER ASSEMBLY	100	67	67	RET T1500
TRUSS ASSEMBLY	150	56	45	RET T3000
TRUSS PIN (PORT)	150	56	45	RET T3000
TRUSS PIN (STBD)	150	56	45	RET T3000
STINGER ASSEMBLY	150	56	45	RET T500
STINGER PIN	150	56	45	RET T500

ENGINE INSPECTIONS/REMOVALS

PORT ENGINE	CYCLE	30 REMAIN	33 REMAIN
100 HOUR INSPECTION EFH	100	65.7	73.5
400 HOUR INSPECTION EFH	400	265.7	273.5
1200 HOUR INSPECTION EFH	1200	1065.7	496.0
POWER SECTION (TRBN RTR ASSY)	NOTES	6966.8	9577.0
REDUCTION GEAR BOX (PROP SHAFT)	NOTES	2915.7	2346.0
KVA GENERATOR	2000	1686.7	1796.3

AIRFRAME REMOVALS

NOMENCLATURE	CYCLE	30 REMAIN	33 REMAIN	NOTES
NLG SHOCK STRUT	4228	2096.6	1786.5	RET T4228
NLG HOLDBACK ASSEMBLY	1500	657.6	412.5	RET T1500
DRAG BRACE ASSEMBLY	5336	5294.6	3740.5	RET T5336
OUTERWING PANEL (PORT)	7050	1353.1	214.4	
OUTERWING PANEL (STBD)	7050	1453.1	214.4	
MOTOR, CONSTANT SPEED (AYC-942 INC)	800	265.1	N/A	
MOTOR, CONSTANT SPEED (AYC-942 NINC)	600	N/A	230.4	
ELEVATOR LOAD RELIEF PUSHROD	1800	978.7	1096.0	OVERHAUL AT C1800
ELEV FEEL SYS LD RELIEF PUSHROD	3000	2465.1	923.4	
ELEVATOR FEEL SPRING	3000	1554.1	2296.0	
INBOARD LOAD RELIEF PUSHROD	2500	2309.7	1007.4	
RUDDER SYSTEM FEEL SPRING	3000	1181.1	2554.6	
OUTBOARD LOAD RELIEF PUSHROD (PORT)	2500	1855.4	1981.5	
OUTBOARD LOAD RELIEF PUSHROD (STBD)	2500	681.1	1528.6	
BUNGEE/SPRING (PORT)	4000	2554.1	3481.5	
BUNGEE/SPRING (STBD)	4000	709.1	2507.4	

STBD ENGINE	CYCLE	30 REMAIN	33 REMAIN
100 HOUR INSPECTION EFH	100	65.7	73.5
400 HOUR INSPECTION EFH	400	265.7	273.5
1200 HOUR INSPECTION EFH	1200	1065.7	908.0
POWER SECTION (TRBN RTR ASSY)	NOTES	7483.6	10053.6
REDUCTION GEAR BOX (PROP SHAFT)	NOTES	2910.6	434.6
KVA GENERATOR	2000	1860.6	644.6

DATE:

11/20/2017 15:32

ALSS HI-TIME COMPONENTS

162154 (30)

NOMENCLATURE	SERNO	INSP INTRVL	DATE	
WAB UPPER	M446016	5 YEAR	31-Oct-18	
WAB LOWER	M340877	5 YEAR	30-Apr-18	
O2 REG UPPER	00739	448 DAY	23-Jan-18	
O2 REG LOWER	02688	448 DAY	21-May-18	
PAX O2 REG	068	448 DAY	22-Dec-17	
AIR BOTTLE CARGO	85912EE	8 YEAR	31-Aug-19	
AIR BTL LNDG GEAR EXT	10055	8 YEAR	31-Dec-17	
FIRE BOTTLE L/H	16348DB	336 DAY/10 YEAR	4-Jun-18	31-Mar-26
FIRE BOTTLE R/H	70929EK	336 DAY/10 YEAR	4-Jun-18	31-Mar-26
FIRE BOTTLE APU	0148DD	336 DAY/10 YEAR	28-May-18	30-Sep-23
PORTABLE FIRE EXT FWD	EN0019713	180 DAY/5 YEAR	19-Dec-17	30-Apr-21
PORTABLE FIRE EXT AFT	EN0021000	180 DAY/5 YEAR	19-Dec-17	31-Jul-21
FIRE EXT CARTRIDGE L/H	205	6 YEAR	30-Nov-22	
FIRE EXT CARTRIDGE R/H	54	6 YEAR	31-Oct-18	
FIRE EXT CARTRIDGE APU	748	6 YEAR	30-Apr-19	
LOX CONVERTER FWD	11501NR	231 DAY	5-Jan-18	
LOX CONVERTER AFT	012866NR	231 DAY	15-Jan-18	
PILOT O2 REG	813208	448 DAY	30-Jan-18	
CO PILOT O2 REG	904204	448 DAY	18-Nov-18	
LIFERAFT	131	365 DAY	14-Apr-18	
LIFERAFT	46A	365 DAY	13-Jul-18	
LIFERAFT	02	365 DAY	22-Aug-18	
LIFERAFT	035A	365 DAY	7-Jun-18	
PILOT SEAT PAN	0086	448 DAY	18-Aug-18	
CO PILOT SEAT PAN	071	448 DAY	26-Dec-17	

162175 (33)

NOMENCLATURE	SERNO	INSP INTRVL	DATE	
WAB UPPER	M365459	5 YEAR	31-May-18	
WAB LOWER	M365442	5 YEAR	30-May-18	
O2 REG UPPER	01970	448 DAY	6-Apr-18	
O2 REG LOWER	00654	448 DAY	6-Apr-18	
PAX O2 REG	065	448 DAY	6-Jun-18	
AIR BOTTLE CARGO	60006-0049	8 YEAR	30-Apr-24	
AIR BTL LNDG GEAR EXT	68510D1	8 YEAR	30-Dec-17	
FIRE BOTTLE L/H	75362EK	336 DAY/10 YEAR	22-Nov-17	28-Feb-25
FIRE BOTTLE R/H	54170EJ	336 DAY/10 YEAR	22-Nov-17	28-Feb-25
FIRE BOTTLE APU	99128EJ	336 DAY/10 YEAR	30-Dec-17	30-Sep-24
PORTABLE FIRE EXT FWD	EN0019152	180 DAY/5 YEAR	25-Nov-17	31-Mar-19
PORTABLE FIRE EXT AFT	EN0019116	180 DAY/5 YEAR	24-Nov-17	31-Mar-19
FIRE EXT CARTRIDGE L/H	023	6 YEAR	31-Jul-21	
FIRE EXT CARTRIDGE R/H	124	6 YEAR	31-Dec-22	
FIRE EXT CARTRIDGE APU	1225	6 YEAR	30-Apr-19	
LOX CONVERTER FWD	012560NR	231 DAY	7-Jan-18	
LOX CONVERTER AFT	10718NR	231 DAY	11-Jan-18	
PILOT O2 REG	00254	448 DAY	21-May-18	
CO PILOT O2 REG	000131361	448 DAY	9-Dec-17	
LIFERAFT	029	365 DAY	1-Mar-18	
LIFERAFT	28	365 DAY	1-Mar-18	
LIFERAFT	11	365 DAY	1-Mar-18	
LIFERAFT	057	365 DAY	17-Apr-18	
PILOT SEAT PAN	1966	448 DAY	26-Dec-17	
CO PILOT SEAT PAN	148A	448 DAY	23-May-18	

PARACHUTES

PARACHUTE	3802H	1460 DAY	13-Apr-18
PARACHUTE	2500H	1460 DAY	30-Sep-19
PARACHUTE	071422	1460 DAY	20-Jun-18

PARACHUTE	071421	1460 DAY	10-Dec-19
PARACHUTE	3457H	1460 DAY	29-Mar-21
PARACHUTE	071504	1460 DAY	10-Jan-20

SPARE LOX CONVERTERS

LOX CONVERTER SPARE	013313NR	231 DAY	IN PUK

LOX CONVERTER SPARE	01244NR	231 DAY	IN PUK

SPARE FIRE BOTTLES

FIRE BOTTLE (APU)	77799EK	336/10 YEAR	24-Jul-18	7-Aug-27

FIRE BOTTLE (ENG)	77736EK	336/10 YEAR	11-May-18	7-Jun-27

IWAKUNI

C2-A SERIES AIRCRAFT ENGINE
PERFORMANCE POWER CHECK

BUNO 162175/33 DATE ISSUED _____ SER NR _____ DATE COMPLETED 2 NOV 2017

THIS FORM IS TO BE COMPLETED AND TURNED INTO MAINTENANCE CONTROL
MAINTENANCE CONTROL FORWARD TO QUALITY ASSURANCE.

PRESTART

1. RECORD ENGINE SERIAL NUMBER AND OPERATING HOURS:

1		2	
OTH 9876	9550.3	ITH 1537	12316.9

STARTING

2. RECORD ENGINE START TEMPERATURES:

1	2
800	830

3. ESTABLISH MINIMUM HORSEPOWER AND RECORD: *INSURE ALL BLEEDS ARE CLOSED ON ENGINE BEING CHECKED

1	2
380	300

PERFORMANCE CHECK

WITH AIRCRAFT HEADED INTO WIND, COMPLETE THE FOLLOWING:

1. RECORD THE FOLLOWING: PRESSURE ALTITUDE 17 FT. OAT 21 F° C°

NOTE: ACCURATE MEASUREMENT OF TEMPERATURE CANNOT BE OVEREMPHASIZED. AN ERROR OF FIVE DEGREES C IN TEMPERATURE WILL CHANGE ENGINE PERFORMANCE BY 4.0% (REFER TO PARAGRAPH 5b.).

2. ON ENGINE BEING CHECKED, BLEED AIR OFF, ENGINE ANTI-ICING OFF, SET 1050 DEGREES C OR 4300 HP (T56-A-425) WHICH EVER IS REACHED FIRST; ALLOW TO STABILIZE AND RECORD INFORMATION BELOW.

NOTE: FOR THIS CHECK EXCESSIVE STABILIZATION TIME IS NOT REQUIRED. NORMALLY READINGS CAN BE TAKEN AFTER 15 SECONDS.

3. REPEAT ABOVE STEPS ON OPPOSITE ENGINE.

	1	2
HORSEPOWER	4300	4300
TIT	1010	1020
FUEL FLOW	2150	2200
ENGINE PERFORMANCE %	104.64	102.28
PRIOR PERFORMANCE %	105.01	101.55
PERFORMANCE CHANGE △%	-0.37	.73

LAST 3 AVG. 104.99 — LAST 3 AVG -102.79

Figure 1. Engine Ground Run Form

DEPARTMENT OF THE NAVY
CARRIER AIRBORNE EARLY WARNING SQUADRON 120
1027 BELLINGER BLVD.
NAVAL STATION, NORFOLK, VIRGINIA 23511-2216

3711
Ser 00/

From: Commanding Officer, Carrier Airborne Early Warning Squadron 120
To: Commanding Officer, Fleet Logistics Support Squadron 30

Subj: VRC-30 DETACHMENT 5 NAVAL AIR TRAINING AND OPERATING PROCEDURES STANDARDIZATION UNIT EVALUATION

Ref: (a) CANAF M-3710.7 (Series)
(b) COMNAVAIRFORINST 3510.4 (Series)
(c) CARAEWRON120INST 3710.3 (Series)

Encl: (1) General NATOPS Program Unit Evaluation Results
(2) Pilot NATOPS Unit Evaluation Results
(3) Aircrew NATOPS Unit Evaluation Results
(4) Unit Evaluation Recommendations

1. Per references (a) through (c), a Naval Air Training and Operating Procedures Standardization (NATOPS) Unit Evaluation of VRC-30 Detachment 5 was conducted from 24 - 27 January 2017 on board Naval Air Station Atsugi Japan. An overall grade of EXCELLENT was awarded. Enclosures (1) through (4) are forwarded as required by reference (b). In accordance with reference (a), your next NATOPS Unit Evaluation will be conducted NLT July 2018.

(b) (3) (A), (b) (6)
[redacted]

Copy to:
COMACCLOGWING
Officer In Charge Det 5
C-2A Program Managers

3711
Ser 00/

From: Commanding Officer, Carrier Airborne Early Warning Squadron 120
To: Commanding Officer, Fleet Logistics Support Squadron 30

Subj: VRC-30 DETACHMENT 5 NAVAL AIR TRAINING AND OPERATING PROCEDURES STANDARDIZATION UNIT EVALUATION

Ref: (a) CANAF M-3710.7 (Series)
(b) COMNAVAIRFORINST 3510.4 (Series)
(c) CARAEWRON120INST 3710.3 (Series)

Encl: (1) General NATOPS Program Unit Evaluation Results
(2) Pilot NATOPS Unit Evaluation Results
(3) Aircrew NATOPS Unit Evaluation Results
(4) Unit Evaluation Recommendations

1. Per references (a) through (c), a Naval Air Training and Operating Procedures Standardization (NATOPS) Unit Evaluation of VRC-30 Detachment 5 was conducted from 24 - 27 January 2017 on board Naval Air Station Atsugi Japan. An overall grade of EXCELLENT was awarded. Enclosures (1) through (4) are forwarded as required by reference (b). In accordance with reference (a), your next NATOPS Unit Evaluation will be conducted NLT July 2018.

[redacted]

Copy to:
COMACCLOGWING
Officer In Charge Det 5
C-2A Program Managers

VRC-30 DET 5 GENERAL NATOPS PROGRAM UNIT EVALUATION RESULTS

The general NATOPS program evaluation included Crew Resource Management, Operational Risk Management, Standard Operating Procedures, briefing guides, NATOPS publication control, NATOPS Standardization and Training, and the Engine Turn Program. Recommendations for improvement are listed in Enclosure (4).

Major Discrepancies: No major discrepancies were found.

1. **CRM Program**: The CRM Program needs work. The detachment currently employs an adequate number of instructors and facilitators. Several NATOPS Jackets did not have CRM logged that was completed and verified via memo. This shows a lack of procedure to manage the CRM program within the NATOPS Program. Furthermore, one instructor's letter was found to be insufficient. It was titled "Instructor Facilitator". This qualification does not exist and both Facilitator and Instructor require their own separate designation letters. The binder itself was in good working order.

2. **ORM Program**: The ORM Program is on track. LCDR [redacted] (b) (3) (A), (b) (6) is designated in writing by the Officer in Charge as the ORM Program Manager. The command lacks a senior enlisted ORM Assistant due to COMACCLOGWING refusing to fund the requirement. A hard copy of governing ORM instructions is kept in a binder for quick reference. The ORM binder is missing attendance sheets of ORM training that was conducted. Annual and Refresher training is performed and logged appropriately in their NATOPS jacket.

3. **SOP/Briefing Guide**: The current squadron SOP is Fleet Logistics Support Squadron THREE ZERO INST VRC30INST3710.3N dated 2 February 2016. The SOP discusses scheduling and execution limitations extensively. It also addresses FCFs, BITS requirements, publications to be found in the aircraft and includes a briefing guide that encompasses all NATOPS required briefing items.

4. **Publications/Instructions**:

a. **Publication Control**: The NATOPS Officer utilizes a sufficient NATOPS Publication Inventory Tracker to track serialization and location for NFMs and PCLs. The NATOPS publication controls process is in working order.

b. **NATOPS Publications/Instructions**: Spot checks were conducted on pubs in the hangar, the aircraft, and on the squadron LAN. All FCF books in QA were found up to date. All hard and soft copies of CNAF M-3710.7 were up to date. The squadron NATOPS Officer and Petty Officer have done an excellent job of eliminating old, out-dated, or uncontrolled copies of instructions. Most instructions are found in the program binders they govern, with a few duplicates in the Pilot NATOPS Turnover Binder. All required hard and soft copies of publications were on hand and found to be up to date with the most recent series or incorporated interim changes.

5. **NATOPS Standardization Meetings**: The NATOPS Standardization program is on track. Documented Standardization Meetings have been held quarterly, including a record of aircrew

attendance and topics discussed. Most Stan meetings include a review of VRC-30 homeguard Stan Meeting notes, keeping uniformity between homeguard and Detachment 5. Overall, the Standardization program is outstanding!

6. **NATOPS Training**: Pilot training is generally conducted on a weekly basis, meeting the minimum monthly requirement. A future training plan has been put in place for the year. Training is conducted through lectures, demonstrations, and quizzes. An attendance record is added to the training folder to ensure everyone is receiving training. This record of attendance will allow makeup sessions for those missing members if the topic is critical in nature. It was obvious from the excellent results of the closed book exam that the training administered by the NATOPS/Training Officer is effective. Aircrew training lacked a written record of aircrew specific training prior to February 2015. Aircrew are usually included with maintenance department weekly training, however the requirement still remains that aircrew specific training must be planned and executed monthly at a minimum. An aircrew training plan is currently in place for the rest of the year.

7. **Turn Qualification Program**: The turn qualification program is in excellent condition. The COMACCLOGWING INST 11018.1K was released on 5 January 2017. There are multiple individuals with a logged turn on the currency turn sheet (enclosure 5) from the previous instruction. The Program Manager has the current enclosure 5 in the turn binder, but will need individuals to transfer turns with dates after 5 Jan uary2017. Individuals are meeting proper timelines based on the instruction and MMP matches all turn operators and qualifications.

8. **Overall**: The VRC-30 Detachment 5 NATOPS program is in EXCELLENT condition. Although there is room to improve by correction of discrepancies and incorporation of best practices/recommendations made in enclosure (4), it is apparent the detachment is running a solid and safe program.

VRC-30 DET 5 PILOT NATOPS UNIT EVALUATION RESULTS

The Pilot Evaluation consisted of a NATOPS Instructor evaluation flight, a NATOPS Standardization check flight, a review of all administrative aspects of the program, and a closed book NATOPS examination of all pilots.

Major Discrepancies: NONE.

1. **Closed Book NATOPS Evaluation:** A Unit Evaluation closed book exam was administered to all five pilots in the detachment. The exam emphasized C-2A NATOPS emergency procedures, limitations, preflight, and normal operations. The unit average score was 3.81. All memory Emergency Procedures were correct.

2. **NATOPS Evaluation Flight:**

a. A NATOPS Instructor Evaluation and CRM Flight was conducted for LCDR [redacted] (b) (3) (A), (b) (6) LCDR [redacted] (b) (3) (A), (b) (6) exhibited excellent judgment, procedural knowledge, and airmanship during all phases of flight. He thoroughly understands the training objectives, strengths, weaknesses and nuances of training maneuvers used to train community pilots. He was recommended for a NATOPS Instructor Qualification in the C-2A aircraft.

b. In addition, a standard NATOPS Evaluation and CRM Flight was conducted for LT [redacted] (b) (3) (A), (b) (6) He demonstrated excellent NATOPS knowledge. LT [redacted] (b) (3) (A), (b) (6) exhibited excellent judgment, procedural knowledge, and airmanship during all phases of flight. He demonstrated excellent situational awareness, always staying ahead of the plane.

3. **NATOPS Program:**

a. **NATOPS Jackets**: The NATOPS Jackets are on track and maintained in satisfactory condition with and above average number of discrepancies noted.

i. **BITS flights**: All pilots have maintained their BITS requirements and there were zero discrepancies found. It is recommended as a best practice to have BITs exams completed within 24 hours of the BITs flight.

ii. **Medical Upchits:** One pilot was missing his administrative upchit in his NATOPS Jacket. The discrepancy was fixed on the spot.

iii. **CRM:** Three pilots did not have Annual CRM logged in their jacket. However, it was fixed on the spot utilizing CRM memos in the CRM binder.

iv. **Ditch and Bailout:** Two pilots did not have Ditch and Bailout logged, however, it was logged correctly on both pilot's STANX paperwork, making it an easy fix.

v. **SSN:** Still a few Social Security Numbers in a few of the jackets. If a SSN is blacked out it must also be photocopied so it cannot be seen.

b. **Flight Logbooks:** The flight logbooks are maintained in excellent condition with minor discrepancies. LT (b) (3) (A); (b) (6) [redacted] did not have a precision approach logged for his 2L4 flight. There were also several pilots that were missing signatures for their mishap pages.

c. **NATOPS Officer Turnover Binder**: The binder is in excellent condition, it is well maintained and up to date. It contains pertinent instructions, important points of contact, and copies of all required designation letters

d. **NATOPS Exams:** Multiple versions of the Closed Book, Open Book and BITS Exams exist and all are up to date with the current NATOPS. There is sufficient variance between different versions and they all cover appropriate information for the C-2A aircraft.

e. **NATOPS Instructors and Assistant NATOPS Instructors:** At the time of the evaluation the squadron has one NI and one ANI. If airfield availability prevents a precision approach, the STANX can still be accomplished, be sure to annotate it accordingly as a discrepancy in the NATOPS jacket.

f. **NATOPS Officer Designation:** The NATOPS officer has a signed letter of designation as the VRC-30 Detachment 5 NATOPS Officer.

4. **Previous Discrepancies:** All discrepancies from the previous unit evaluation were corrected.

5. **Overall:** The VRC-30 Detachment 5 C-2A Pilot NATOPS program is on track and most minor discrepancies were fixed on the spot. With the correction of the noted discrepancies we are confident that VRC-30 Detachment 5 Pilot NATOPS Program will continue to remain on track.

VRC-30 DET 5 AIRCREW NATOPS UNIT EVALUATION RESULTS

The enlisted aircrew evaluation consisted of two NATOPS evaluation flights, a review of all administrative aspects of the program, and an open and closed book NATOPS examination of all available aircrew.

Major Discrepancies: No major discrepancies noted.

1. **Open/Closed Book NATOPS Evaluations:** A NATOPS Unit Evaluation open and closed book exam was administered to all available Aircrew at the squadron representing 83% of total Aircrew onboard. The exam emphasized C-2A NATOPS emergency procedures, limitations, systems, servicing, and normal operations. The unit average score was 4.0 for the open book and 3.95 for the closed book. All memory emergency procedures were correct.

2. **NATOPS Instructor Evaluation Flight:** A NATOPS Instructor evaluation of AWF1 (b) (3) (A), (b) (6) [redacted] was completed. The evaluation consisted of an oral examination, open and closed book examinations, and Crew Resource Management check flight. AWF1 (b) (3) (A), (b) (6) [redacted] satisfactorily completed all areas of the evaluation process. He demonstrated an above average knowledge of aircraft systems, flight and emergency procedures, CRM techniques, and standardization issues. He scored a 3.9 on the closed book examination and a 4.0 on the open book examination.

3. **NATOPS Program:**

a. **NATOPS Jackets:** VRC-30 Detachment 5 NATOPS jackets were in satisfactory condition with minor discrepancies. Many of these discrepancies were corrected on the spot. One discrepancy noted of a NATOPS jacket destroyed in a flood incident, multiple signatures were erased by the water.

b. **Flight Logbooks:** Logbooks were in satisfactory condition with minor discrepancies, some of which were corrected on the spot.

c. **NATOPS Training/Aircrew Upgrade Syllabus:** The NATOPS training program is unsatisfactory. This is a repeat discrepancy from spot check completed in 2016. The student training program is lacking documentation. Several weak areas in C-2A NATOPS, 3710, professional military, and other in-rate areas were identified as needing improvement. See recommendations below.

4. **Overall:** Overall, the VRC-30 Detachment 5 Aircrew NATOPS Program is in satisfactory condition. As previously stated, there are several training aspects that need improvement including documentation of students that were identified. They have a satisfactory plan of action to correct these discrepancies. The C-2A Taxi/Turn program is in excellent condition.

VRC-30 DET 5 UNIT EVALUATION RECOMMENDATIONS

1. **NATOPS Jackets:**

a. Develop a method to ensure all STANX logging requirements are met when a signed STANX is placed in the jacket. This will ensure that everything that was done to ensure the STANX was ready to be flown is properly logged in all applicable sections of the pilot's jacket. In several cases the STANX paperwork was the only documentation that Ditch and Bailout and CRM flights were being conducted, however, they were not logged in their separate locations.

b. Continue to scrub the jackets on at least a quarterly basis. By scrubbing the jackets at a higher rate the chance of a major discrepancy drastically decreases. Also, use another set of eyes. Utilize your aircrew NATOPS to scrub pilot jackets and vice versa. The jackets are different but the overall feel is similar and acts as a sanity check for your processes.

2. **NATOPS Publications:**

a. An electronic record of all NFM's and PCL's is located on the LAN as well as a binder with a paper copy to track NFM's and PCL's over the long term as they change hands. Ensure that this record incorporates interim changes as they are published.

3. **NATOPS Exams:**

a. Limit access to NATOPS open and closed book exams to only the NATOPS Officer.

b. Create a second version of a BITS exam for aircrew.

4. **Crew Resource Management:**

a. Ensure your CRM Instructors are first designated as a Facilitator then as an Instructor. It is also a requirement for the FRS Commanding Officer to designate them in writing as he is the Model Manager.

b. Designate AWF1 (b) (3) (A), (b) (6) as a CRM Instructor if you intend to use him as an aircrew NATOPS Instructor in order to ensure the new CRM Instruction requirements are met.

5. **Operational Risk Management:**

a. Send a Senior Enlisted member to the required ORM school and designate them as an ORM assistant IAW COMACCLOGWING 3500.7

b. Include attendance sheets in the ORM binder to cross reference training with NATOPS jackets.

6. **Aircrew NATOPS Training**:

a. Plan and execute Aircrew specific training in conjunction with squadron maintenance training. Devote time to both basic training and more advanced crew chief training. Keep training attendance records in a training binder and ensure absent aircrew receive makeup training.

7. **Pilot NATOPS Training**:

a. NATOPS Training Program needs improvement overall. Recommended to contact brother squadrons for training program set up. Located old files on share drive of training lectures, will need updates. Trainees checking on board should have at the minimum, a fight evaluation if not completing a graded flight. All graded syllabi criteria's were routed directly to VRC-30 homegaurd without being reviewed by Detachment 5 chain of command. Recommend at a minimum to be routed through training/NATOPS/OIC before sending off to homegaurd. Specific NATOPS program training needs a proactive oversight presence, which includes a monthly spot check process, periodic NATOPS quizzes, minimum monthly training, etc. Additionally, continued emphasis needs to be placed on fleet standardization.

8. **Aircrew Responsibilities**:

a. Aircrew responsibilities should be dispersed equally among senior leadership. NATOPS/SCHEDS/TRAINING Petty Officer runs efficiently when controlled by one individual each. This is not the sole responsibility of the program manager.

b. During an evaluation flight, found that aircrew was signing both computed by and authority by on the form F. During review of the 1B-50, authority by can be signed by a technician. Aircrew can be qualified as a technician by the MO on the MMP. Recommend having computed by and authority by blocks signed by separate aircrew and aircrew qualed on the local MMP as technicians by the MO.

(b) (3) (A), (b) (6) [redacted] **YN3 (LCC-19)**

From: (b) (3) (A), (b) (6) LT USN, CTF70 (b) (3) (A), (b) (6) [redacted]
Sent: Thursday, April 12, 2018 3:44 PM
To: (b) (3) (A), (b) (6) [redacted] YN3 (LCC-19)
Subject: FW: PW33 JAGMAN - AMI and MCI results / NATOPS Unit Evals

-----Original Message-----
From: (b) (3) (A), (b) (6) [redacted] CDR COMACCLOGWING (b) (3) (A), (b) (6) [redacted]
Sent: Wednesday, March 21, 2018 12:53 AM
To: (b) (3) (A), (b) (6) [redacted] CDR USN, USS RONALD REAGAN (b) (3) (A), (b) (6) [redacted]
Cc: VAW-125 XO(FE) (b) (3) (A), (b) (6) [redacted] (b) (3) (A), (b) (6) [redacted] CAPT, COMACCLOGWING, Commodore (N00)
(b) (3) (A), (b) (6) [redacted] (b) (3) (A), (b) (6) [redacted] CAPT COMACCLOGWING, Deputy Commodore (N01)
(b) (3) (A), (b) (6) [redacted] (b) (3) (A), (b) [redacted] CAPT (LCC-19) (b) (3) (A), (b) (6) [redacted] (b) (3) (A), (b) [redacted]
(b) (3) (A), (b) (6) [redacted] (b) (3) (A), (b) [redacted] CAPT (LCC-19) (b) (3) (A), (b) (6) [redacted]
Subject: RE: PW33 JAGMAN - AMI and MCI results / NATOPS Unit Evals

(b) (3) (A), (b) (6) [redacted]

Please see below and attached.

-PW 33's most recent MCI was performed from 24-26Apr17. Although this was only a "walk-around" inspection, the results were:
46 corrosion points
14 material points
60 points total (with 0 flight critical hits)

-The average material condition results of the 13 C-2 MCIs (intrusive looks) performed in 2017 were:
67 corrosion points
21 material points
88 points total

-VRC-30 DET-5 MCI conducted 12-14Feb18 results:
A/C 30 - Corrosion points=110, Material points=17, total points=127 (10 points flight critical=FAIL) A/C 31 - (WALK-AROUND) Corrosion points=88, Material points=22, total points=110 (5 points flight critical=FAIL)

VRC-30 DET-5 MPA score 12-16Feb18 = 72.2%
VRC-30 DET-5 MPA score 15-17Aug16 = 96.6%
VRC-30 DET-5 MPA score 16-18Feb16 = 98.5%

VRC-30 homeguard MPA score 23-26May16 = 78.3

We could not find a historical AMI average. We did attach the most recent AMI summary for the Det from Sept 2016.

Let us know if we can be of any further assistance. Have a great day.

V/R,
(b) (3) (A), (b) (6) [redacted]

(b) (3) (A), (b) (6)
CDR USN
ACCLOG Wing MO
Work: (b) (3) (A), (b) (6)
DSN: (b) (3) (A),
Cell: (b) (3) (A), (b) (6)

-----Original Message-----
From: (b) (3) (A), (b) (6) CDR USN, USS RONALD REAGAN [mailto (b) (3) (A), (b) (6)
Sent: Wednesday, March 14, 2018 3:57 PM
To: (b) (3) (A), (b) CDR PEO(T), PMA-231
Cc: (b) (3) (A), (b) (6) CDR COMACCLOGWING; VAW-125 XO(FE); (b) (3) (A), (b) (6) CAPT, COMACCLOGWING, Commodore (N00); (b) (3) (A), (b) (6) CAPT COMACCLOGWING, Deputy Commodore (N01); (b) (3) (A), (b) (6) CAPT (LCC-19)'; (b) (3) (A), (b) (6) CAPT (LCC-19)'
Subject: PW33 JAGMAN - AMI and MCI results / NATOPS Unit Evals

(b) (3) (A), (b)
We recently received the MCI and AMI from Det 5. But for perspective, we'd like to get some historical data on the DET 5's previous AMIs and MCIs, especially on PW 33.

We'd like to request Det 5's previous results and any kind of historical average you might have for the C-2 community at large for comparison. Specifically:

Request PW 33's most recent MCI results
How is the material condition of the average C-2? How does DET 5's MCI from FEB 2018 stack against the COD fleet in general.
Request DET 5's AMI results prior to Feb 2018
Is there an historical average AMI score for Det 5 and homeguard?
Request DET 5's most recent NATOPS unit evaluation (I can reach out to the FRS if they are the only ones with those findings)

Thanks for all the help on this. We appreciate all the support.

Very Respectfully,
(b) (3) (A), (b) (6)

CDR (b) (3) (A), (b) (6)
Air Officer
USS RONALD REAGAN (CVN-76)
Office: (b) (3) (A), (b) (6)
Stateroom: (b) (3) (A), (b) (6)
Cell: (b) (3) (A), (b) (6)
SIPR: (b) (3) (A), (b) (6)

-----Original Message-----
From: (b) (3) (A), (b) (6) CDR PEO(T), PMA-231 [mailto (b) (3) (A), (b) (6)
Sent: Wednesday, January 24, 2018 10:37 AM
To: (b) (3) (A), (b) (6) CDR USN, USS RONALD REAGAN

Cc:(b) (3) (A), (b) (6) CDR COMACCLOGWING; VAW-125 XO(FE);(b) (3) (A), (b) (6) CAPT, COMACCLOGWING, Commodore (N00);(b) (3) (A), (b) (6) CAPT COMACCLOGWING, Deputy Commodore (N01)
Subject: RE: PW33 JAGMAN - C-2 Airframe and Engine Hours

(b) (3) (A), (b)

See below, let me know if you have any other questions.

v/r,
(b) (3) (A), (b) (6)

All 34 C-2s completed SLEP from 2004 to 2011, except 162142 which never completed SLEP.

As of Dec 31, 2017 Flight Hour Report:
Ave Age of Active C-2s = 30.41 years
Ave Flight Hrs of Active C-2s = 10,210 hoursFYI: 162175 went through SLEP from 2-Mar-2010 to 7-Mar-2011, this was the last C-2 to complete SLEP.

There are 94 active -425 engines with an average TSN of 9,064*.

* source: Deckplate report 11/27/17

Maint:
1. What is the average airframe and engine hour time for C-2's?

Average airframe life of XXXX; 94 active -425 engines with an average TSN of 9,064

And AFH Remaining the number of hours until a SLEP? When does the engine require an overhaul?

No established overhaul limit. Engines pulled when performance drops below 95% or due to failure beyond O/I level capability.

2. When do aircraft go into SLEP?

All 34 C-2s completed SLEP from 2004 to 2011, except 162142 (Developmental test aircraft) which never completed SLEP.
162175 went through SLEP from 2-Mar-2010 to 7-Mar-2011, this was the last C-2 to complete SLEP.

Safety:
1. What was the date of the last C-2 ditch? We think it might be in March of 1985 but would like official confirmation.

The last C-2 ditch was November 16, 1973. 152787 crashed into Souda Bay, Crete, Greece. VR-24 aircraft that crashed shortly after take-off from Souda, Crete on 16 NOV 1973, buno: 152787. The only C-2 CLASS A (Ground) occurrence in the 80's was in March of 1988 when a Plane Captain walked into the prop of a VRC-40 aircraft.

-----Original Message-----
From:(b) (3) (A), (b) (6)
Sent: Sunday, January 21, 2018 9:58 PM
To:(b) (3) (A), (b) (6)
Cc:(b) (3) (A), (b) (6) CDR PEO(T), PMA-231;(b) (3) (A), (b) (6) CDR COMACCLOGWING;(b) (3) (A), (b) (6) CAPT, COMACCLOGWING, Commodore (N00);(b) (3) (A), (b) (6) CAPT COMACCLOGWING, Deputy Commodore (N01)
Subject: RE: PW33 JAGMAN - C-2 Airframe and Engine Hours

(b) (3) (A), (b) (6) [redacted]

Putting you in touch with CDR (b) (3) (A), (b) (6) [redacted] PMA-231, and CDR (b) (3) (A), (b) (6) [redacted] ACCLOGWING MO. Given the nature and purpose of your questions, I think it would be the cleanest to pursue the answers from them directly. CC-ing CDRE and Deputy CDRE for SA.

Vr/ (b) (3) (A), (b) (6) [redacted]

CDR (b) (3) (A), (b) (6) [redacted]
Commanding Officer
VAW-125 TIGERTAILS
Carrier Air Wing FIVE
Marine Corps Air Station
Iwakuni, Japan
D: (b) (3) (A), (b) (6) [redacted]

ALL IN, FANGS OUT!

-----Original Message-----
From: (b) (3) (A), (b) (6) [redacted] CDR USN, USS RONALD REAGAN [mailto (b) (3) (A), (b) (6) [redacted]
Sent: Friday, January 19, 2018 3:09 PM
To: (b) (3) (A), (b) (6) [redacted] CDR USN VAW125
Subject: PW33 JAGMAN - C-2 Airframe and Engine Hours

(b) (3) (A), (b) (6) [redacted]

Thanks for the assist with this info.

Maint:
1. What is the average airframe and engine hour time for C-2's? We have PW33's numbers and would like to compare. Is Airframe TSN the total hours ?
And AFH Remaining the number of hours until a SLEP? When does the engine require an overhaul?
2. When do aircraft go into SLEP?

Safety:
1. What was the date of the last C-2 ditch? We think it might be in March of 1985 but would like official confirmation.

Respectfully,
(b) (3) (A), (b) (6) [redacted]

CDR (b) (3) (A), (b) (6) [redacted]
Air Officer
USS RONALD REAGAN (CVN-76)
Office: (b) (3) (A), (b) (6) [redacted]
Stateroom: (b) (3) (A), (b) (6) [redacted]
Cell: (b) (3) (A), (b) (6) [redacted]
SIPR: (b) (3) (A), (b) (6) [redacted]

26 Apr 17

From: Maintenance Officer, Commander Airborne Command and Control Logistics Wing
To: Commanding Officer, Fleet Logistics Support Squadron THREE ZERO Detachment FIVE

Subj: VRC-30 DETACHMENT FIVE PRE CRUISE AIRCRAFT MATERIAL CONDITION INSPECTION RESULTS

1. COMACCLOGWING Maintenance Team conducted an Aircraft Material Condition Inspection from 24-26 April 2017. VRC-30 received an overall grade of "PASS". A separate power point presentation slide was prepared to discuss aircraft and engine material condition and corrosion discrepancies.

2. Maintenance programs associated with AMCI that were evaluated:

- Aviation Life Support Systems (ALSS) is graded "Pass".

- Aircraft Logbooks/Records is graded "Pass".

- SE Material Condition is graded "Pass".

- Corrosion/General Maintenance Practices is graded as "Pass".

3. The Wing Maintenance Advisors assisted VRC-30 Det 5 personnel on applicable corrosion prevention techniques in identifying, preventing, and documenting corrosion discrepancies. Emphasis was placed on process improvement and improved inspection procedures rather than individual discrepancy correction.

(b) (3) (A), (b) (6)
[redacted]

By direction

15 Feb 18

From: Maintenance Officer, Commander Airborne Command and Control Logistics Wing
To: Officer in Charge, Fleet Logistics Support Squadron THREE ZERO Detachment FIVE

Subj: VRC-30 DETACHMENT FIVE PERIODIC AIRCRAFT MATERIAL CONDITION INSPECTION RESULTS

1. COMACCLOGWING Maintenance Team conducted an Aircraft Material Condition Inspection on two aircraft from 12-14 Feb 2018. Both aircraft 30 BUNO 162154 and aircraft 31 BUNO 162165 received a grade of "FAIL". A separate power point presentation was prepared to outline detailed results.

2. Programs associated with MCI were graded during the Maintenance Program Assessment (MPA).

3. The Wing Maintenance Advisors assisted VRC-30 DET-5 personnel on applicable corrosion prevention techniques in identifying, preventing, and documenting corrosion discrepancies. Emphasis was placed on process improvement and improved inspection procedures rather than individual discrepancy correction.

(b) (3) (A), (b) (6)
[redacted]

By direction

16 FEB 2018

From: Maintenance Officer, Airborne Command and Control Logistics Wing
To: Commanding Officer, Fleet Logistics Support Squadron Three Zero Detachment Five
Subj: SAFE-FOR-FLIGHT MAINTENANCE PROGRAMS ASSESSMENT VISIT (MPA) RESULTS (VRC-30 Det Five)

Ref: (a) COMNAVAIRFORINST 4790.2C
(b) COMACCLOGWINGINST NAMPSOP 10.24

Encl: (1) Maintenance Programs Assist Overview
(2) Computerized Self-Evaluation Checklist (CSEC) Report
(3) Grade Sheet

1. The COMACCLOGWING Maintenance Programs Assessment Team (CMPAT) conducted a Maintenance Programs Assessment (MPA) visit to VRC-30 Det Five from 12 to 16 February 2018 using COMNAVAIRFOR Aviation Maintenance Management Team (AMMT) and COMACCLOGWING methodology. The approach incorporates three important elements:

a. An analysis of the effectiveness and efficiency of the maintenance department in its support of squadron operational requirements. This is done through examination of available data including NAVRIIP/Cockpit Charts, MDR reports, AMCRs, 3M Summaries, Monthly Maintenance Plans, FLTMPS reports, etc. Special attention is demonstrated to identify metrics and trends that indicate non-optimal efficiency and effectiveness. Additionally, the CMPAT observes maintenance control prioritization, communication, quality and workload management to evaluate actual command effectiveness.

b. Verification of Safe Operations. Drills and practical examinations permit verification of sound maintenance practices, effectiveness of maintenance training and overall proficiency, availability and proper use of personal protective equipment and the squadron's ability to respond appropriately to emergent situations.

c. Compliance with governing instructions and directives. Compliance with all policies and procedures directed by higher authority remains critical to the overall success of the maintenance effort. Standard evaluations of COMNAVAIRFORINST 4790.2C, NAVAIR, TYCOM, Type Wing, NAVSUP, NAVOSH and other applicable directives are performed to assess compliance and ensure completion of all required maintenance documentation and training.

2. Maintenance department operations were verified through the evaluation of 11 contingency drills and 63 practical proficiency examinations. Eleven contingency drills, and 60 practical proficiency examinations were graded satisfactory. Overall, the practical proficiency examinations and contingency drills show the maintenance department is effective in routine maintenance performance.

3. CMPAT evaluated 37 NAMP programs to verify compliance with governing directives resulting in 18 programs graded "On-Track," 10 programs graded "Needs More Attention" (NMA) and nine programs graded "Off-Track". Details for "NMA" and "Off-Track" programs are provided in Enclosure (2). The CMPAT attributes "NMA" and "Off-Track" programs to lack of attention to detail and interaction between program managers and Quality Assurance to ensure program monitoring and audit follow up procedures are effective.

4. The CMPAT strongly recommends aggressively training all incoming program managers to reduce common deficiencies and maintain program readiness. Tailor command maintenance training to coincide with downing discrepancies with the focus on process improvement. A self audit is highly recommended in addition to the Quality Assurance scheduled audits/monitors. Areas requiring immediate attention include: Maintenance Training, Fuel Surveillance, Quality Assurance, Naval Aviation Maintenance Discrepancy Reporting (NAMDRP), Aircraft Confined Space, Tool Control, Corrosion Prevention and Control, Plane Captain (PC) Qualification, Egress System Checkout, Support Equipment Planned Maintenance System (SEPMS), Technical Data Management, Hazardous Material Control & Management (HAZMAT), Electromagnetic Interference(EMI)/ Electrostatic Discharge (ESD), Technical Directive (TD) Compliance, Data Analysis, Material Control, NOWP AWCAP, Explosives Handling Personnel Qualification & Certification and Aviation Life Support System (ALSS). When reviewing this program, emphasis should be placed on process improvement rather than individual discrepancy correction.

5. The CMPAT believes all discrepancies are within VRC-30 Det Five Maintenance Department's ability to rectify. The CMPAT will be available to assist in conducting training upon request.

6. NAMP programs with discrepancies require submission of a POA&M from the squadron to the WING Assistant Maintenance Officer (AMO). Deliberate emphasis must be placed on evaluating and correcting the processes that lead to discrepancies, in addition to discrepancy correction alone. The POA&M shall be submitted within the following timelines:

(a) NAMP Programs evaluated "Off-Track" or "Needs More Attention" will require a Plan of Action and Milestones (POA&M) within 10 working days and be reported IAW reference (a) paragraph 10.24.4.5 (b).

(b) NAMP Programs evaluated to be "On-Track" with discrepancies will require a (POA&M) to be submitted within 20 working days.

7. Please address any questions to CDR [redacted], COMACCLOGWING Maintenance Officer (N42), at [redacted], DSN [redacted], COMM [redacted].

[redacted]
By Direction

WEIGHT AND BALANCE CLEARANCE FORM F - TRANSPORT
(Use reverse for tactial missions)

FOR USE WITH T.O. 1-1B-40,NAVAIR 01-1B-40, AND TM-55-1500-342-23

Form Approved OMB No. 0704-0188

Public reporting burden for for this collection of information is estimated to average 10 minutes per response, including the time for reviewing instructions,searchingexisting datasourses,gathering and maintaining the data needed,and completing and reviewing the collection of information.Send comments regarding this burden estimate or any other aspectof this collection of information,including suggestions for reducing this burden to Washington Headquaters Services Directorate for Information Operations and reports,1215Jefferson Davis Highway,Suite 1204 Arlington,VA 22202-4302 and to the Office of Management and Budget Paperwork Reduction Project(0704-0188) Washington,DC 20503.

DATE(yymmdd)	171122	AIR CRAFT TYPE	C-2A	FROM	RJOI	HOME STATION	ATSUGI
MISSION	ZR	SERIAL NO.	162175	TO	RJOW	PILOT	LCDR (b) (3) (A), (b) (6) [redacted]
REMARKS		A/C	33				

CREW @ 180=	
CAGE	
SEATS @ 146	
PAX @ 180	
BAGS@ 50	
CARGO	
MAIL	
	JULIAN=
PAYLOAD	
MAX TRAP=	
LOAD ADJUSTER NUMBER	

REF	ITEM	WEIGHT	INDEX / MOM
1	BASIC AIRCRAFT (From Chart C)	36262.5	11674
2			
3	CREW (No.) 118.2	360	42.6
4	CREW'S BAGGAGE		
5	STEWARD'S EQUIPMENT		
6	EMERGENCY EQUIPMENT		
7	EXTRA EQUIPMENT		
8			
9	OPERATING WEIGHT	36622	11716
10	TAKEOFF FUEL (Gal.)	12000	3930
11	WATER INJ.		
12	TOTAL AIRCRAFT WEIGHT	48622	15646

CORRECTIONS / MOST FWD / MOST AFT

COMPT ARM	ITEM	CHANGES (+ or -) WEIGHT	CHANGES (+ or -) INDEX/ MOM	PASSENGERS NO.	PASSENGERS WEIGHT
TOTAL WEIGHT REMOVED					
TOTAL WEIGHT ADDED					
NET DIFFERENCE					

13 DISTRIBUTION OF ALLOWABLE LOAD (PAYLOAD)

COMPT ARM	CARGO	CARGO	COMPT ARM
D	500	500	195.2
E	1460	400	237.8
F		400	275.5
G		400	315.5
H	500	300	355.5
I	1460	360	395.5
J	1460	300	430.5
K	1460		460.5
L	1460	360	488

14 ZERO FUEL WT		
Σ FUEL WT INO./MOM.		
ZERO FUEL% M.A.C.		24.95%
D	1000	195
E	546	129
F	1100	110
G	400	126
H	600	213
I	500	200
J	500	217
K	1460	62
L	506	247
15	46010	14199
	48622	15646
16 TAKEOFF CONDITION (UNCORRECTED)	53232	17145
17 TAKE OFF C.G. IN % M.A.C.OR IN		26.35%
18 CORRECTIONS (IF REQUIRED)		
19 TAKEOFF CONDITION (CORRECTED)		
20 TAKEOFF C.G. IN % M.A.C. OR IN		
21 ZERO FUEL WT (REF. 14)	41232	13215
22 LESS AIR DROP LOAD		
23 ESTIMATED LANDING FUEL	7768	2588
24 ESTIMATED LANDING CONDITION	49000	15803
25 ESTIMATED LANDING C.G. IN %M.A.C.OR IN		26.74%

LIMITATIONS

CONDITION	TAKEOFF	LANDING	FUEL
ALLOWABLE GROSS WEIGHT	57500	49000	41232
TOTAL AIRCRAFT WT.(REF12)	48622		
(REF. 8)+(REF. 23)		44340	
OPERATING WT. (REF. 9)			36622
ALLOWABLE LOAD (REF. 13) (use smallest figure)	9878	4610	4610
ZERO FUEL OR LIMITING WING FUEL			

PERMISSIBLE C. G. TAKEOFF	FWD	20.7	AFT	31.3
PERMISSIBLE C.G. LANDING	FWD	20.0	AFT	30.7
PERMISSIBLE C.G. ZERO FUEL WT.	FWD		AFT	

COMPUTED BY	(b) (3) (A), (b) (6) [redacted]
W&B AUTHORITY	(b) (3) (A), (b) (6) [redacted]
PILOT	(b) (3) (A), (b) (6) [redacted]

DD Form 365 [redacted]

PREVIOUS EDITION MAY BE USED

DISPATCH LOG (MCAS IWAKUNI)

DATE: Saturday, November 18, 2017

CALL TIME	DISPATCHER	SQRN	TYPE A/C	NOSE #	TAIL #	DRIVER	TRUCK	DISP TIME	ARRIVE TIME	START TIME	STOP TIME	LEAVE TIME	GALLON ISSUED	FUELING TYPE
0600	(b) (3) (A), (b) (6) [redacted]	30	C2	33	162175	(b) (3) (A), (b) (6) [redacted]	596	0600	0605	0607	0615	0615	1097	REFUEL
0620	(b) (3) (A), (b) (6) [redacted]				596	(b) (3) (A), (b) (6) [redacted]	T01	0620	0620	0620	0630	0630	1110	TOPOFF
1419	(b) (3) (A), (b) (6) [redacted]	30	C2	30	162154	(b) (3) (A), (b) (6) [redacted]	262	1421	1434	1436	1442	1442	613	REFUEL
1453	(b) (3) (A), (b) (6) [redacted]				262	(b) (3) (A), (b) (6) [redacted]	T01	1453	1454	1454	1459	1459	603	TOPOFF
1517	(b) (3) (A), (b) (6) [redacted]	ATOC	C12		163555	(b) (3) (A), (b) (6) [redacted]	262	1520	1529	1535	1548	1548	261	REFUEL
1549	(b) (3) (A), (b) (6) [redacted]				262	(b) (3) (A), (b) (6) [redacted]	T01	1555	1555	1556	1600	1600	260	TOPOFF
1611	(b) (3) (A), (b) (6) [redacted]	30	C2	33	162175	(b) (3) (A), (b) (6) [redacted]	262	1623	1625	1627	1637	1637	1017	REFUEL
1637	(b) (3) (A), (b) (6) [redacted]				262	(b) (3) (A), (b) (6) [redacted]	T01	1645	1645	1645	1650	1650	194	TOPOFF

DATE: MONDAY, NOVEMBER 28, PAGE: 1 OF

CALL TIME	DISPATCHER	SQRN	TYPE A/C	NOSE #	TAIL #	DRIVER	TRUCK	DISP TIME	ARRIVE TIME	START TIME	STOP TIME	LEAVE TIME	GALLON ISSUED	FUELING TYPE
0615	[redacted]	30	GSE	—	B 7030 N	[redacted]	974	0620	0625	0629	0636	0636	14	REFUEL
0640	[redacted]	30	C2	30	162154	[redacted]	715	0650	0720	0720	0725	0725	54	REFUEL
0640	[redacted]	30	C2	33	162175	[redacted]	715	0650	0715	0717	0720	0720	74	REFUEL
0615	[redacted]	30	GSE	—	B 7030 N	[redacted]	974	0620	0625	0629	0636	0636	26	REFUEL
0915	[redacted]	152	C130	596 983	167983	[redacted]	596	0916	0920	0922	0930	0930	3684	REFUEL
0920	[redacted]	MALS			B600	[redacted]	611	0925	0926	0927	0930	0931	19	REFUEL
0921	[redacted]	MCB			B 1070	[redacted]	611	0932	0933	0935	1000	1001	70	REFUEL
0944	[redacted]				596	[redacted]	T01	0950	0953	0953	1000	1002	3700	TOPOFF
1017	[redacted]	ordinance	GSE		B4000	[redacted]	610	1019	1054	1054	1054	1054	22	Refuel
1400	[redacted]	121	F35	01	169164	[redacted]	838	1400	1415	1426	1420	1430	1783	REFUEL
1400	[redacted]	121	F35	04	169168	[redacted]	773	1400	1420	1425	1430	1430	1777	REFUEL
1400	[redacted]	121	F35	05	169169	[redacted]	773	1400	1420	1425	1430	1430	1665	REFUEL
1400	[redacted]	121	F35	06	169292	[redacted]	838	1400	1415	1420	1420	1430	1793	REFUEL
1400	[redacted]	121	F35	07	169293	[redacted]	715	1400	1430	1430	1430	1430	1684	REFUEL
1400	[redacted]	121	F35	09	169295	[redacted]	596	1400	1430	1430	1430	1430	1748	REFUEL
1400	[redacted]	121	F35	13	169412	[redacted]	596	1400	1430	1430	1430	1430	1706	REFUEL
1440	[redacted]				773	[redacted]	T01	1435	1440	1440	1440	1445	3395	TOPOFF
1440	[redacted]				596	[redacted]	T01	1445	1450	1450	1455	1455	3533	TOPOFF
1445	[redacted]				838	[redacted]	T02	1445	1450	1451	1451	1500	3570	TOPOFF
1500	[redacted]				715	[redacted]	T01	1450	1455	1455	1500	1500	1684	TOPOFF
1600	[redacted]	30	C2	30	162154	[redacted]	839	1610					994	REFUEL
1620	[redacted]				839	[redacted]	T01	1620	1627	1627	1630	1631	1190	TOPOFF

C-2A FUEL SAMPLE LOG

TYPE EQUIPMENT		FLOW POINT LOCATION PORT/STBD/EXTENDED RANGE TANKS								REMARKS TANK/DRAIN/PORT/STBD EXTENDED RANGE TANKS								BUNO/SERIAL NUMBER 162173 / 33		
DATE	TIME	P	S	1	2	3	4	5	6	P	S	1	2	3	4	5	6	SAMPLE TAKEN BY	INSPECTED BY	FUEL TYPE
6NOV17	0915	1	1							A	A							AWF3 BELL	AD2 LYNN	JP5
9NOV17	0500	1	1							A	A							AWF3 BELL	AD2 LYNN	JP5
10NOV17	0730	1	1							A	A							AWF3 BELL	AD2 LYNN	JP5
11NOV17	0745	1	1							A	A							AWF3 BELL	AD2 LYNN	JP5
12NOV17	0845	1	1							A	A							AWF 3 BELL	AD2 LYNN	JP5
13NOV17	0815	1	1							A	A							AWF3 BELL	AD2 LYNN	JP5
13NOV17	2039	1	1							A	A							AD2 [illegible]	AD2 SALAME	JP5
16NOV17	0715	1	1							A	A							~~AD2~~ AWF3 BELL	AD2 LYNN	JP5
17NOV17	0915	1	1							A	A							AWF3 BELL	AD2 LYNN	JP5
18NOV17	0445	1	1							A	A							AWF3 BELL	AD2 LYNN	JP5
20NOV17	0815	1	1							A	A							AWF3 BELL	AD2 LYNN	JP5
21NOV17	0445	1	1							A	A							AWF3 BELL	AD2 LYNN	JP5
22NOV17	0600	1	1							A	A							AWF3 BELL	DUFI POLLERES	JP5

TYPES OF CONTAMINATION:
A= NO CONTAMINATION FOUND
W= WATER
P= PARTICULATE MATTER
M= MICROBIOLOGICAL GROWTH
E= EMULSIONS
MISC= MISCELLANEOUS

DIRECTIONS:
-UNDER EACH FLOW POINT LOCATION COLUMN, LOG THE TOTAL NUMBER OF FUEL SAMPLES TAKEN.
-IN REMARKS COLUMN, REFERENCE THE APPROPRIATE INDIVIDUAL CONTAMINATION CODE FOR SAMPLE TAKEN.

C-2A FUEL SAMPLE LOG

TYPE EQUIPMENT		LOW POINT LOCATION PORT/STBD/EXTENDED RANGE TANKS								REMARKS TANK/CELL/PORT/STBD EXTENDED RANGE TANKS								BUNO/SERIAL NUMBER 162175/33		
DATE	TIME	1P	1S	1E	2	3P	4	5	6	1P	1S	1E	2	3	4	5	6	SAMPLE TAKEN BY	INSPECTED BY	FUEL TYPE
27 SEP 17	1313	1	1							A	A							(b) (3) (A), (b) (6) [redacted]	(b) (3) (A), (b) (6) [redacted]	JP-5
29 SEP 17	0730	1	1							A	A									JP-5
30 SEP 17	0955	1	1							A	A									JP-5
5 OCT 17	0840	1	1							A	A									Jet A
6 OCT 17	1049	1	1							A	A									JP-5
7 OCT 17	0950	1	1							A	A									JP-5
8 OCT 17	0800	1	1							A	A									JP-5
9 OCT 17	0830	1	1							A	A									JP-5
10 OCT 17	0700	1	1							A	A									JP-5
11 OCT 17	0700	1	1							A	A									JP-5
17 OCT 17	0930	1	1							A	A									JP-5
18 OCT 17	0920	1	1							A	A									JP-5
19 OCT 17	0650	1	1							A	A									JP-5
27 OCT 17	0870	1	1							A	A									JP-5
28 OCT 17	0800	1	1							A	A									JP-5
29 OCT 17	0900	1	1							A	A									JP-5
30 OCT 17	0530	1	1							A	A									JP5
1 NOV 17	0745	1	1							A	A									JP5
2 NOV 17	0730	1	1							A	A									JP5
4 NOV 17	0730	1	1							A	A									JP5
5 NOV 17	0725	1	1							A	A									JP5

TYPES OF CONTAMINATION

A= NO CONTAMINATION FOUND
W= WATER
P= PARTICULATE MATTER
M= MICROBIOLOGICAL GROWTH
E= EMULSIONS
MISC= MISCELLANEOUS

DIRECTIONS:

-UNDER EACH LOW POINT LOCATION COLUMN, LOG THE TOTAL NUMBER OF FUEL SAMPLES TAKEN.

-IN REMARKS COLUMN, IDENTIFY THE APPROPRIATE INDIVIDUAL CONTAMINATION CODE FOR SAMPLE TAKEN.

C-2A FUEL SAMPLE LOG

BUNO/SERIAL NUMBER: 162175/33

TYPE EQUIPMENT		LOW POINT LOCATION PORT/STBD/EXTENDED RANGE TANKS								REMARKS TANK/CELL/PORT/STBD EXTENDED RANGE TANKS										
DATE	TIME	P	S	1	2	3	4	5	6	P	S	1	2	3	4	5	6	SAMPLE TAKEN BY	INSPECTED BY	FUEL TYPE
31 Aug 17	0830	1	1							P	P							(b) (3) (A), (b) (6) [redacted]	(b) (3) (A), (b) (6) [redacted]	JP-5
01SEP17	0755	1	1							A	A									JP-5
02SEP17	0735	1	1							A	A									JP-5
04SEP17	1520	2	2							P/A	P/A									JP-5
05SEP17	0800	1	1							A	A									JP-5
06SEP17	0730	1	1							A	A									JP-5
07SEP17	0815	1	1							A	A									JP-5
09SEP17	0740	1	2							A	P/A									JP-5
10SEP17	0750	1	1							A	A									JP-5
11SEP17	0745	1	1							A	A									JP-5
12SEP17	0540	1	1							A	A									JP-5
13SEP17	0900	1	1							A	A									JP-5
14SEP17	0908	1	1							A	A									JP-5
18SEP17	1430	1	1							A	A									JP-5
19SEP17	0820	1	1							A	A									JP-5
20SEP17	0945	1	2							A	P/A									JP-5
21SEP17	0955	1	1							A	A									JP-5
22SEP17	1024	1	1							A	A									JP-5
24SEP17	0880	1	1							A	A									JP-5
25SEP17	0705	1	1							A	A									JP-5
26SEP17	0720	1	1							A	A									JP-5

TYPES OF CONTAMINATION:
A= NO CONTAMINATION FOUND
W= WATER
P= PARTICULATE MATTER
M= MICROBIOLOGICAL GROWTH
E= EMULSIONS
MISC= MISCELLANEOUS

DIRECTIONS:
-UNDER EACH LOW POINT LOCATION COLUMN, LOG THE TOTAL NUMBER OF FUEL SAMPLES TAKEN.
-IN REMARKS COLUMN, IDENTIFY THE APPROPRIATE INDIVIDUAL CONTAMINATION CODE FOR SAMPLE TAKEN.

NAMPSOP 10.3
27 Mar 17

E-2C/E-2D/C-2A T-56 ENGINE/GEARBOX OIL CONSUMPTION RECORD

ENGINE/GEARBOX S/N: 1TH1587 ENGINE POSITION (P/S) STBD BUNO: 162175 MODEX: 33

MAXIMUM ALLOWABLE OIL CONSUMPTION: 44.8 Ounces (.35 gallons) per flight hour

WARNING: VERIFY THAT THE PROPER ENGINE OIL IS USED WHEN SERVICING AIRCRAFT IAW REFERENCE (B), (C) OR (D), AS APPLICABLE.

DATE	OIL SERVICING UNIT SERIAL NUMBER	TYPE OIL USED FOR SERVICING	FIRST DRAIN (STEP A)	SECOND DRAIN (STEP B)	TOTAL OF A+B (STEP C)	AMOUNT OIL PUMPED IN (STEP D)	OIL USED D-C=E (STEP E)	FLIGHT HOURS (STEP F)	OIL CONSUMPTION RATE E/F=G (STEP G)	QUALIFIED OIL SERVICING TECHNICIAN SIGNATURE	MAINTENANCE CONTROL SIGNATURE	REMARKS/ QA MONITOR SIGNATURE
1NOV17	762	23699	13	6	19	30	11	2.9	3.79	(b) (3) (A), (b) (6)	(b) (3) (A), (b) (6)	(b) (3) (A), (b) (6) [redacted]
6NOV17	762	23699	12	4	16	30	14	2.9	4.82			
7NOV17	762	23699	14	4	18	24	6	3.0	2.00			
8NOV17	762	23699	12	6	18	28	10	2.8	3.57			
11NOV17	762	23699	12	4	16	24	8	3.1	2.58			
12NOV17	762	23699	12	10	22	22	0	1.6	0			
13NOV17	762	23699	14	8	22	26	~~24~~ 4	4.3	~~0.465~~ .93			
14NOV17	762	23699	12	8	20	96	76	1.9	40			
16NOV17	758	23699	14	11	25	68	43	5.5	7.81			
17NOV17	762	23699	14	14	28	135	107	5.8	18.44			
18NOV17	758	23699	14	12	26	146	120	5.6	21.42			

STEPS TO FOLLOW: A. RECORD, B. RECORD, C. ADD (A+B=C) RECORD, D. RECORD, E. SUBTRACT (D-C=E) RECORD, F. RECORD, G. DIVIDE E/F=G RECORD, RECORD SIGNATURES.

NOTE:
1. Refer to NA 01-E2AAA-2-1, WP 055 01 for E-2C engine oil consumption mathematical formula.
2. Refer to A1-C2AHA-GAI-200, WP 042 01 for C-2A(R) engine oil consumption mathematical formula.
3. Refer to E2HAWKEYEE2D-26512-02010 (Engine Oil System Servicing) for E-2D engine oil consumption mathematical formula.
4. Step E calculation shall be documented in block 6 of OPNAV Form 4790/141 (Aircraft Acceptance and Inspection Record).

NAMPSOP 10.3
27 Mar 17

E-2C/E-2D/C-2A T-56 ENGINE/GEARBOX OIL CONSUMPTION RECORD

ENGINE/GEARBOX S/N: ØTH9876Q ENGINE POSITION (P/S): PORT BUNO: 162175 MODEX: 33

MAXIMUM ALLOWABLE OIL CONSUMPTION: 44.8 Ounces (.35 gallons) per flight hour

WARNING: VERIFY THAT THE PROPER ENGINE OIL IS USED WHEN SERVICING AIRCRAFT IAW REFERENCE (B), (C) OR (D), AS APPLICABLE.

DATE	OIL SERVICING UNIT SERIAL NUMBER	TYPE OIL USED FOR SERVICING	FIRST DRAIN (STEP A)	SECOND DRAIN (STEP B)	TOTAL OF A+B (STEP C)	AMOUNT OIL PUMPED IN (STEP D)	OIL USED D-C=E (STEP E)	FLIGHT HOURS (STEP F)	OIL CONSUMPTION RATE E/F=G (STEP G)	QUALIFIED OIL SERVICING TECHNICIAN SIGNATURE	MAINTENANCE CONTROL SIGNATURE	REMARKS/ QA MONITOR SIGNATURE
1NOV17	762	23699	12	9	21	32	11	2.9	3.79	(b) (3) (A), (b) (6)	(b) (3) (A), (b) (6)	(b) (3) (A), (b) (6)
6NOV17	762	23699	12	4	16	30	14	2.9	4.82			
8NOV17	762	23699	12	4	16	40	24	3.0	8.00			
10NOV	762	23699	12	11	23	36	13	2.8	4.64			
11NOV17	762	23699	12	12	24	48	24	3.1	7.09			
12NOV17	762	23699	12	9	21	18	Ø	1.6	Ø			
13NOV17	762	23699	12	8	20	22	2	4.3	Ø.46			
14NOV17	762	23699	18	8	26	32	6	1.9	3.15			
16NOV17	758	23699	12	14	26	65	39	5.5	7.09			
17NOV17	762	23699	12	8	20	40	20	5.8	3.44			
18NOV17	758	23699	12	19	26	88	62	5.6	11.07			

STEPS TO FOLLOW: A. RECORD, B. RECORD, C. ADD (A+B=C) RECORD, D. RECORD, E. SUBTRACT (D-C=E) RECORD, F. RECORD, G. DIVIDE E/F=G RECORD, RECORD SIGNATURES.

NOTE:
1. Refer to NA 01-E2AAA-2-1, WP 055 01 for E-2C engine oil consumption mathematical formula.
2. Refer to A1-C2AHA-GAI-200, WP 042 01 for C-2A(R) engine oil consumption mathematical formula.
3. Refer to E2HAWKEYEE2D-26512-02010 (Engine Oil System Servicing) for E-2D engine oil consumption mathematical formula.
4. Step E calculation shall be documented in block 6 of OPNAV Form 4790/141 (Aircraft Acceptance and Inspection Record).

E-2C/C-2A NP2000 PROPELLER HYDRAULIC FLUID CONSUMPTION/SERVICING FORM

PROPELLER S/N: 121121751 PUMP HOUSING S/N: 200051201B ENGINE POSITION (P/S): P

BUNO: 162175 SQUADRON: VRC-30 MODEX: 33 PUMP HOUSING INSTALL DATE 17X / OV2016

MAXIMUM ALLOWABLE HYDRAULIC FLUID CONSUMPTION: 1 Quart (32 Ounces) PER REQUIRED SERVICING CHECK*
(OR) ANY FLUID ADDITION ON TWO CONSECUTIVE REQUIRED SERVICING CHECKS*

DATE	FLUID ADDED? (Y/N)	AMOUNT OF FLUID ADDED (IF APPLICABLE)	AIRCRAFT HOURS	QUALIFIED SERVICING PERSONNEL SIGNATURE	QA MONITOR SIGNATURE	REMARKS
07AUG17	N	Ø	9616.7	(b) (3) (A), (b) (6) [redacted]	(b) (3) (A), (b) (6) [redacted]	7-DAY
16AUG17	Y	6 OZ	9619.1			OXYE7JT
16AUG17	N	Ø	9619.1			7-DAY
23AUG17	N	Ø	9619.1			7-DAY
29AUG17	N	Ø	9619.1			7-DAY
04SEP17	No	Ø	9625.2			7-DAY
10SEP17	N	Ø	9634.9			7-DAY
12SEP17	Y	15 OZ	9644.4			~~OXE~~ MCN: OXYE82G
19SEP17	NO	Ø	9649.0			7-DAY
24SEP17	N	Ø	9659.7			7-DAY
02OCT17	N	Ø	9674.8			OXYE8QJ
8OCT17	N	Ø	9676.6			7 DAY MCN: OXYE8BN
09OCT17	Y	15 OZ	9684.5			MCN:
18OCT17	Y	16 OZ	9991.7			7 DAY MCN: OXYE8GS
26OCT17	N	Ø	9,697.5			7-DAY
29OCT17	N	Ø	9,700.2			7-DAY
5NOV17	N	Ø	9,709.1			7-DAY
13NOV17	Y	1.5 OZ	9,726.8			7-DAY
19NOV17	N	Ø OZ	9,745.6			7-DAY

*IF VOLUNTARY SERVICING CHECKS ARE PERFORMED MORE FREQUENTLY THAN REQUIRED PER NA 01-E21MP-6-3 (E-2C) OR A1-C21MP-MRC-250 (C-2A), SEE GUIDANCE IN PROPELLER SERVICING RECORD, THIS WP.

REFER TO NAVAIR 19-1-96 FOR USAGE OF THE PMU-71/B FLUID SERVICING UNIT

Figure 4. NP2000 Propeller Hydraulic Fluid Consumption/Servicing Form

E-2C/C-2A NP2000 PROPELLER HYDRAULIC FLUID CONSUMPTION/SERVICING FORM

PROPELLER S/N: 12112175 1 PUMP HOUSING S/N: 20051201 8 ENGINE POSITION (P/S): P

BUNO: 162175 SQUADRON: VRC-30 MODEX: 33 PUMP HOUSING INSTALL DATE 17X/0U2016

MAXIMUM ALLOWABLE HYDRAULIC FLUID CONSUMPTION: 1 Quart (32 Ounces) PER REQUIRED SERVICING CHECK*
(OR) ANY FLUID ADDITION ON TWO CONSECUTIVE REQUIRED SERVICING CHECKS*

DATE	FLUID ADDED? (Y/N)	AMOUNT OF FLUID ADDED (IF APPLICABLE)	AIRCRAFT HOURS	QUALIFIED SERVICING PERSONNEL SIGNATURE	QA MONITOR SIGNATURE	REMARKS
03APR17	N	Ø oz	9350.7	(b) (3) (A), (b) (6)	(b) (3) (A), (b) (6)	7-DAY
17APR17	Y	8 oz	9376	[redacted]	[redacted]	INITIAL
24APR17	N	Ø	9377.5	[redacted]	[redacted]	7-DAY
01MAY17	N	Ø	9384.2	[redacted]	[redacted]	7-DAY
08MAY17	Y	30	9405.7	[redacted]	[redacted]	7-DAY
15MAY17	N	Ø	9406.3	[redacted]	[redacted]	7-DAY
21MAY17	N	Ø	9421.4	[redacted]	[redacted]	7-DAY
28MAY17	N	Ø	9438.5	[redacted]	[redacted]	7-DAY
06JUN17	~~N~~ Y	10 oz	9439.5	[redacted]	[redacted]	7-DAY
19JUNE17	N	Ø	9485.1	[redacted]	[redacted]	7-DAY
22JUN17	Y	15 oz	9493.3	[redacted]	[redacted]	7-DAY
28JUN17	N	Ø	9504.3	[redacted]	[redacted]	7-DAY
03JULY17	N	Ø	9504.3	[redacted]	[redacted]	7-DAY
04JULY17	N	Ø	9532.8	[redacted]	[redacted]	7-DAY
11JUL17	Y	7 oz	9550.6	[redacted]	[redacted]	ØXYE74Y
16JUL17	N	Ø	9569.3	[redacted]	[redacted]	7-DAY
19JUL17	Y	6 oz	9573.7	[redacted]	[redacted]	ØYE78A
23JUL17	N	Ø	9576.7	[redacted]	[redacted]	7-DAY
29JUL17	N	Ø	9577.2	[redacted]	[redacted]	7-DAY
01AUG17	N	Ø oz	9585.2	[redacted]	[redacted]	7-DAY
05AUG17	Y	15 oz	9611.9	[redacted]	[redacted]	7-DAY

*IF VOLUNTARY SERVICING CHECKS ARE PERFORMED MORE FREQUENTLY THAN REQUIRED PER NA 01-E2IMP-6-3 (E-2C) OR A1-C2IMP-MRC-250 (C-2A), SEE GUIDANCE IN PROPELLER SERVICING RECORD, THIS WP.

REFER TO NAVAIR 19-1-96 FOR USAGE OF THE PMU-71/E FLUID SERVICING UNIT

Figure 4. NP2000 Propeller Hydraulic Fluid Consumption/Servicing Form

E-2C/C-2A NP2000 PROPELLER HYDRAULIC FLUID CONSUMPTION/SERVICING FORM

PROPELLER S/N: 12112175 PUMP HOUSING S/N: 2665 12648 ENGINE POSITION (P/S): Port

BUNO: 162175 SQUADRON: VRC-30 MODEX: 33 PUMP HOUSING INSTALL DATE 17 NOV 2016

MAXIMUM ALLOWABLE HYDRAULIC FLUID CONSUMPTION: 1 Quart (32 Ounces) PER REQUIRED SERVICING CHECK*
(OR) ANY FLUID ADDITION ON TWO CONSECUTIVE REQUIRED SERVICING CHECKS*

DATE	FLUID ADDED? (Y/N)	AMOUNT OF FLUID ADDED (IF APPLICABLE)	AIRCRAFT HOURS	QUALIFIED SERVICING PERSONNEL SIGNATURE	QA MONITOR SIGNATURE	REMARKS
17NOV16	Y	8 QUARTS	N/A	(b) (3) (A), (b) (6) [redacted]	(b) (3) (A), (b) (6) [redacted]	PUMP HOUSING R&R
17NOV16	N	Ø	9225.3			7DAY
22NOV16	N	Ø	9225.3			7-DAY
28NOV16	N	Ø	9227.1			7-DAY
5DEC16	N	Ø	9227.1			7-DAY
12DEC16	N	Ø	9227.1			7-DAY
19DEC16	Y	15 OZ	9228.1			7-DAY
27DEC16	N	Ø	9236.7			7-DAY
03JAN17	N	Ø	9242.7			7-DAY
09JAN17	N	Ø	9248.7			7-DAY
17JAN17	Y	18 OZ	9254.3			7-DAY
23JAN17	Y	16 OZ	9261.4			7-DAY / FLUID WAS FIT BELOW OP LVL (Ø)
30JAN	N	Ø	9266.0			7-DAY
7FEB17	Y	16 OZ	9283.1			7-DAY
14FEB17	N	Ø	9286.4			7-DAY
21FEB17	Y	15 OZ	9297.4			7-DAY
27FEB17	N	Ø	9300.2			7-DAY
6MAR17	N	Ø	9310.3			7-DAY
13MAR17	N	Ø	9322.4			7-DAY
20MAR17	Y	15 OZ	9323.2			7-DAY
27MAR17	N	Ø OZ	9339.2			7-DAY

*IF VOLUNTARY SERVICING CHECKS ARE PERFORMED MORE FREQUENTLY THAN REQUIRED PER NA 01-E2IMP-6-3 (E-2C) OR A1-C2IMP-MRC-250 (C-2A), SEE GUIDANCE IN PROPELLER SERVICING RECORD, THIS WP.

REFER TO NAVAIR 19-1-96 FOR USAGE OF THE PMU-71/E FLUID SERVICING UNIT

Figure 4. NP2000 Propeller Hydraulic Fluid Consumption/Servicing Form

E-2C/C-2A NP2000 PROPELLER HYDRAULIC FLUID CONSUMPTION/SERVICING FORM

PROPELLER S/N: 121121752 PUMP HOUSING S/N: 20542 ENGINE POSITION (P/S): S

BUNO: 162175 SQUADRON: VRC 30 MODEX: 33 PUMP HOUSING INSTALL DATE 06AUG14

MAXIMUM ALLOWABLE HYDRAULIC FLUID CONSUMPTION: 1 Quart (32 Ounces) PER REQUIRED SERVICING CHECK*
(OR) ANY FLUID ADDITION ON TWO CONSECUTIVE REQUIRED SERVICING CHECKS*

DATE	FLUID ADDED? (Y/N)	AMOUNT OF FLUID ADDED (IF APPLICABLE)	AIRCRAFT HOURS	QUALIFIED SERVICING PERSONNEL SIGNATURE	QA MONITOR SIGNATURE	REMARKS
03APR17	N	Ø oz	9350.7	(b) (3) (A), (b) (6)	(b) (3) (A), (b) (6)	7-DAY
17APR17	Y	8 oz	9376			INITIAL
24APR17	N	Ø	9377.5			7-DAY
01MAY17	N	Ø	9384.2			7-DAY
08MAY17	Y	30	9405.7			7-DAY
15MAY17	N	Ø	9406.3			7-DAY
21MAY17	N	Ø	9421.4			7-DAY
28MAY17	N	Ø	9438.5			7-DAY
05JUN17	~~Y~~ N	~~15 oz~~ Ø	9454.5			7-DAY
14JUN17	N	Ø	9485.1			7-DAY
22JUN17	N	Ø	9493.7			7-DAY
27JUN17	Y	15 oz	9,504.3			MCU: OXYEGNO
28JUN17	N	Ø	9504.3			7-DAY
03JUL17	N	Ø	9504.3			7-DAY
09JUL17	N	Ø	9536.8			7-DAY
16JUL17	N	Ø	9569.3			7-DAY
19JUL17	N	6 oz	9573.7			OXYEBD
23JUL17	N	Ø	9576.7			7-DAY
29JUL17	N	Ø	9577.2			7-DAY
1AUG17	N	Ø	9589.2			7-DAY
5AUG17	Y	15 oz	9611.9			7-DAY

*IF VOLUNTARY SERVICING CHECKS ARE PERFORMED MORE FREQUENTLY THAN REQUIRED PER NA 01-E2IMP-6-3 (E-2C) OR A1-C2IMP-MRC-250 (C-2A), SEE GUIDANCE IN PROPELLER SERVICING RECORD, THIS WP.

REFER TO NAVAIR 19-1-96 FOR USAGE OF THE PMU-71/E FLUID SERVICING UNIT

Figure 4. NP2000 Propeller Hydraulic Fluid Consumption/Servicing Form

E-2C/C-2A NP2000 PROPELLER HYDRAULIC FLUID CONSUMPTION/SERVICING FORM

PROPELLER S/N: 1.2112752 PUMP HOUSING S/N: 20542 ENGINE POSITION (P/S): STBD

BUNO: 162175 SQUADRON: VRC-30 MODEX: 33 PUMP HOUSING INSTALL DATE 06AUG14

MAXIMUM ALLOWABLE HYDRAULIC FLUID CONSUMPTION: 1 Quart (32 Ounces) PER REQUIRED SERVICING CHECK*
(OR) ANY FLUID ADDITION ON TWO CONSECUTIVE REQUIRED SERVICING CHECKS*

DATE	FLUID ADDED? (Y/N)	AMOUNT OF FLUID ADDED (IF APPLICABLE)	AIRCRAFT HOURS	QUALIFIED SERVICING PERSONNEL SIGNATURE	QA MONITOR SIGNATURE	REMARKS
17NOV16	Y	15 oz	9225.3	(b) (3) (A), (b) (6) [redacted]	(b) (3) (A), (b) (6) [redacted]	7DAY
22NOV16	N	Ø oz	9225.3			7-DAY
28NOV16	N	Ø	9227.1			7-DAY
5DEC16	N	Ø	9227.1			7-DAY
12DEC16	N	Ø	9227.1			7-DAY
19DEC16	N	Ø	9228.1			7-DAY
27DEC16	N	Ø	9236.7			7-DAY
3JAN17	N	Ø	9242.7			7-DAY
9JAN17	N	Ø	9248.7			7-DAY
17JAN17	Y	15 oz	9254.3			7-DAY
23JAN17	Y	16 oz	9261.4			7-DAY / FLUID WAS N/O BELOW OP LVL
30JAN17	N	Ø	9266.0			7-DAY
07FEB17	Y	16 oz	9283.1			7-DAY
14FEB17	N	Ø	9286.4			7-DAY
21FEB17	N	Ø	9297.4			7-DAY
27FEB17	N	Ø	9300.2			7-DAY
06MAR17	N	Ø	9310.3			7-DAY
13MAR17	N	Ø	9322.4			7-DAY
20MAR17	Y	15 oz	9323.2			7-DAY
27MAR17	N	Ø oz	9334.2			7-DAY

*IF VOLUNTARY SERVICING CHECKS ARE PERFORMED MORE FREQUENTLY THAN REQUIRED PER NA 01-E2IMP-6-3 (E-2C) OR A1-C2IMP-MRC-250 (C-2A), SEE GUIDANCE IN PROPELLER SERVICING RECORD, THIS WP.

REFER TO NAVAIR 19-1-96 FOR USAGE OF THE PMU-71/E FLUID SERVICING UNIT

Figure 4. NP2000 Propeller Hydraulic Fluid Consumption/Servicing Form

SEE IRAC # 73

E-2C/C-2A NP2000 PROPELLER HYDRAULIC FLUID CONSUMPTION/SERVICING FORM

PROPELLER S/N: 121121 752 PUMP HOUSING S/N: 20542 ENGINE POSITION (P/S): STBD

BUNO: 162175 SQUADRON: VRC-30 MODEX: 53 PUMP HOUSING INSTALL DATE 06AUG14

MAXIMUM ALLOWABLE HYDRAULIC FLUID CONSUMPTION: 1 Quart (32 Ounces) PER REQUIRED SERVICING CHECK*
(OR) ANY FLUID ADDITION ON TWO CONSECUTIVE REQUIRED SERVICING CHECKS*

DATE	FLUID ADDED? (Y/N)	AMOUNT OF FLUID ADDED (IF APPLICABLE)	AIRCRAFT HOURS	QUALIFIED SERVICING PERSONNEL SIGNATURE	QA MONITOR SIGNATURE	REMARKS
28FEB16	N	Ø	9029.4	(b) (3) (A), (b) (6) [redacted]	(b) (3) (A), (b) (6) [redacted]	7DAY
05MAR16	Y	24 oz	9041.6	[redacted]	[redacted]	7-DAY
06MAY16	N	Ø	9041.6	[redacted]	[redacted]	7-DAY
09MAY16	N	Ø	9041.6	[redacted]	[redacted]	MCN: BWQ9JAU
12JUL16	N	Ø	9041.6	[redacted]	[redacted]	7-DAY. MCN: BWQ9JCI
27JUL16	N	Ø	9041.6	[redacted]	[redacted]	7DAY ORANGE
3AUG16	N	Ø	9046	[redacted]	[redacted]	7DAY ORANGE-BLUE
10AUG16	N	Ø	9068.4	[redacted]	[redacted]	7-DAY
15AUG16	N	Ø	9080.4	[redacted]	[redacted]	7-DAY
21AUG16	N	Ø	9082.1	[redacted]	[redacted]	7-DAY
29AUG16	Y	6 oz	9097.4	[redacted]	[redacted]	7-DAY
4SEP16	N	Ø	~~7D~~ 9104.5	[redacted]	[redacted]	7-DAY
11SEP16	N	Ø	9125.5	[redacted]	[redacted]	7-DAY
18SEP16	N	Ø	9141.2	[redacted]	[redacted]	7-DAY
25SEP16	N	Ø	9147.0	[redacted]	[redacted]	7-DAY
06OCT16	N	Ø	9158.7	[redacted]	[redacted]	7 DAY
09OCT16	Y	5 oz	9164.2	[redacted]	[redacted]	7-DAY
21OCT16	NO	Ø oz	9182.9	[redacted]	[redacted]	7-DAY
24OCT16	NO	Ø	9192.6	[redacted]	[redacted]	7-DAY
03NOV16	N	Ø	9192.6	[redacted]	[redacted]	7-DAY
06NOV16	N	Ø oz	9193.1	[redacted]	[redacted]	7-DAY

*IF VOLUNTARY SERVICING CHECKS ARE PERFORMED MORE FREQUENTLY THAN REQUIRED PER NA 01-E2IMP-6-3 (E-2C) OR A1-C2IMP-MRC-250 (C-2A), SEE GUIDANCE IN PROPELLER SERVICING RECORD, THIS WP.

REFER TO NAVAIR 19-1-96 FOR USAGE OF THE PMU-71/E FLUID SERVICING UNIT

Figure 4. NP2000 Propeller Hydraulic Fluid Consumption/Servicing Form

E-2C/C-2A NP2000 PROPELLER HYDRAULIC FLUID CONSUMPTION/SERVICING FORM

PROPELLER S/N: 121121752 PUMP HOUSING S/N: 24542 ENGINE POSITION (P/S): S

BUNO: 162175 SQUADRON: VAW-78 MODEX: 33 PUMP HOUSING INSTALL DATE 06 AUG 14

MAXIMUM ALLOWABLE HYDRAULIC FLUID CONSUMPTION: 1 Quart (32 Ounces) PER REQUIRED SERVICING CHECK*
(OR) ANY FLUID ADDITION ON TWO CONSECUTIVE REQUIRED SERVICING CHECKS*

DATE	FLUID ADDED? (Y/N)	AMOUNT OF FLUID ADDED (IF APPLICABLE)	AIRCRAFT HOURS	QUALIFIED SERVICING PERSONNEL SIGNATURE	QA MONITOR SIGNATURE	REMARKS
07AUG17	N	Ø	9616.7	(b) (3) (A), (b) (6)	(b) (3) (A), (b) (6)	7-DAY
16AUG17	Y	6 OZ.	9619.1			OXYE2JW
16AUG17	N	Ø	9619.1			7-DAY
23AUG17	N	Ø	9619.1			7-DAY
29AUG17	N	Ø	9619.1			7-DAY
04SEP17	N	Ø	9625.2			7-DAY
10SEP17	N	Ø	9634.9			7-DAY
12SEP17	Y	15 OZ	9644.4			MCN: OXYE82G
19SEP17	N	Ø	9649.0			7-DAY
20SEP17	N	Ø	9654.0			MCN: OXYE84E
24SEP17	Y	15 OZ	9659.7			MCN: OXYE87U
24SEP17	N	Ø	9659.7			7DAY
02OCT17	Y	16 OZ	9674.8			OXYE87J
8OCT17	N	Ø	9676.6			7 DAY MCN: OXYE8BN
09OCT17	Y	15 OZ	9684.5			MCN: OXYE8CH
18OCT17	N	0	9691.7			7 DAY MCN: OXYE8CS
26OCT17	N	Ø	9,697.5			7 DAY
29OCT17	N	Ø	9,700.2			7-DAY
5NOV17	N	Ø	9,709.1			7-DAY
13NOV17	Y	15 OZ	9,722.8			7-DAY
19NOV17	N	Ø OZ	9,745.6			7-DAY

*IF VOLUNTARY SERVICING CHECKS ARE PERFORMED MORE FREQUENTLY THAN REQUIRED PER NA 01-E2IMP-6-3 (E-2C) OR A1-C2IMP-MRC-250 (C-2A), SEE GUIDANCE IN PROPELLER SERVICING RECORD, THIS WP.

REFER TO NAVAIR 19-1-96 FOR USAGE OF THE PMU-71/E FLUID SERVICING UNIT

Figure 4. NP2000 Propeller Hydraulic Fluid Consumption/Servicing Form

QUALITY ASSURANCE FUEL SAMPLE LOG

(MCAS IWAKUNI)

QA LAB POL BLDG 6830

PAGE # 1 OF 1

DATE: 22 Nov 17

	LAB SERIAL	SAMPLE LOCATION	TIME TAKEN	LAB ARRIVAL TIME	VISUAL APPEARANCE	HLWPR SERIAL	TIME WATER	PPM	CCFD SERIAL	TIME SEDIMENT	1ST	2ND	SEDIMENT MG / LTR	F/P TESTER SERIAL	F/P	FSII	API S/G	LAB TECH SIGNATURE
UMIT					CCB			10					2.0		140F	0.03-0.15	36-48	
1		298 715	0740	0750	CCB	13363	0758	0.0	258	0800	405	415	0.0	1827	144	N/R	N/R	[redacted] (b) (3) (A), (b) (6)
2		298 596	0740	0750	CCB	13363	0800	0.0	258	0805	398	420	0.5	1827	144	N/R	N/R	
3		293 773	0740	0750	CCB	13363	0805	0.0	258	0810	414	422	0.0	1568	142	N/R	N/R	
4		302 838	0740	0750	CCB	13363	0810	0.0	258	0815	416	418 ~~420~~	0.0	1568	144	N/R	N/R	
5		302 889	0740	0750	CCB	13363	0815	0.0	258	0820	410	413	0.0	1568	142	N/R	N/R	
6																		
7																		
8																		
9																		
10																		
11																		
12																		
13																		
14																		
15																		
16																		
17																		
18																		
19																		
20																		
21																		
22																		
23																		
24																		
25																		

SUPERVISOR: [redacted] (b) (3) (A), (b) (6)

CPO: [redacted] (b) (3) (A), (b) (6)

MAITENANCE OFFICER [redacted] (b) (3) (A), (b) (6)

QUALITY ASSI''ANCE FUEL SAMPLE LOG

QA LAb POL (MCAS IWAKUNI)

PAGE # 1 OF 1

DATE: 23 NOV '17

	LAB SERIAL	SAMPLE LOCATION	TIME TAKEN	LAB ARRIVAL TIME	VISUAL APPEARANCE	HLWPR SERIAL	TIME WATER	PPM	CCFD SERIAL	TIME SEDIMENT	1ST	2ND	SEDIMENT MG / LTR	F/P TESTER SERIAL	F/P	FSII	API S/G	LAB TECH SIGNATURE
LIMIT					CCB			10					2.0		140F	0.03-0.15	36-48	
1		298514	0725	0740	CCB	18334	0720	0.1	217	0735	400	415	0.2	2310	148	N/R	N/R	[redacted]
2		293772	0725	0740	CCB	18334	0740	0.3	217	0745	396	416	0.4	3019	143	N/R	N/R	
3		298596	0725	0740	CCB	18334	0750	0.2	217	0755	396	411	0.2	1019	140	N/R	N/R	
4		298262	0725	0750	CCB	18334	0755	0.1	217	0800	405	408	0.0	2310	142	N/R	N/R	
5		293773	0725	0750	CCB	18334	0800	0.1	217	0805	392	409	0.2	1019	142	N/R	N/R	
6		TRS-01	0725	0750	CCB	18334	0810	0.0	217	0815	403	405	0.0	3019	144	N/R	N/R	
7		TRS-02	0725	0750	CCB	18334	0815	0.0	217	0820	395	413	0.3	2310	146	N/R	N/R	
8		TRS-04	0725	0750	CCB	18334	0830	0.0	217	0835	396	402	0.0	1019	142	N/R	N/R	
9		302837	0725	0750	CCB	18334	0835	0.0	217	0840	398	402	0.0	2310	148	N/R	N/R	
10		Tank 1	0830	0845	CCB	18334	0850	0.0	217	0855	365	400	1.0	3019	146	N/R	N/R	
11		Tank 5	0830	0845	CCB	18334	0855	0.2	217	0900	385	409	0.6	2310	148	N/R	N/R	
12		Tank 15	0830	0845	CCB	18334	0900	0.0	217	0905	389	403	0.2	1019	148	N/R	N/R	
13		298715	0830	0850	CCB	18334	0920	0.0	217	0925	401	412	0.1	2310	148	N/R	N/R	
14		302839	0830	0850	CCB	18334	0930	0.0	217	0935	402	403	0.0	2310	145	N/R	N/R	
15		302838	0830	0850	CCB	18334	0940	0.0	217	0945	391	416	0.2	3019	147	N/R	N/R	
16																		
17																		
18																		
19																		
20																		
21																		
22																		
23																		
24																		
25																		

NEAT

SUPERVISOR: [redacted] (b) (3) (A), (b) (6)

CPO: [redacted] (b) (3) (A), (b) (6)

MAITENANCE OFFICER [redacted] (b) (3) (A), (b) (6)

PRODUCT CODE
Code de Produit
JP8

INVOICE NO.
Facture du
589

UNIT ID or UIN
Identification
5F8103

02

QUANTITY
Quantité
1318

MEASURE UNIT
Unité de Mesure
GL

UNIT PRICE
Prix Unitaire
1

96 8201 4628 9635

2154

SERVICE LOCATION
Lieu de l'Operation
TUL

ATION
AB

TOTAL PRICE
Prix Total
1

SALE
Vente
RETURN
Remise

METHO
CASH
MEMO

PAYMENT
Mode de Compensation

REPLACEMENT IN KIND
Remplacement Equivalent

BILLING
Address de

AND 1 THROUGH 06/22

REMARKS and/or
Remarques et/ou Pièces

NUMBER

DIR OF LOG
Directeur de Logistique

ACCOUNTANT
Comptable

ISSUE DATE
Date de Distribution
17 3 8

ISSUED BY (SIGNATURE)
Fournisseur
(b) (3) (A), (b) (6)

RECEIVED BY (SIGNATURE)
Service Acheteur
(b) (3) (A), (b) (6)

PRINTED NAME and RANK
(en lettres d'Imprimerie)
(b) (3) (A), (b) (6)

E5

2 CUSTOMER COPY

DD FORM 1898, ENERGY SALES SLIP, JUL 2008 PREVIOUS EDITIONS

Adobe Professional

AFPET LABORATORY REPORT

AFPET/PTPLG
Aerospace Fuels Laboratory
Unit 5161, Building 854
Kadena AB 96368-5161
Japan

Lab Report No:2017LG07075001 Date Received:11/23/17 1439 hrs* Date Sampled: 11/22/2017**
Cust Sample No:NAVY INCIDENT Date Reported:11/24/17 2033 hrs* Protocol:FU-AVI-0013

Sample Submitter:
SIB - Kadena
No Address Available
FPO, AP 96368

Reason for Submission: Aircraft Crash/Incident IAW T.O. 42B-1-1
Product: Aviation Turbine Fuel, Kerosene
Specification: MIL-DTL-83133J Grade:JP-8

Source: 08L-589 Qty Submitted: 2 gal Qty Rep: 6,000 gal

Method	Test	Min	Max	Result
MIL-DTL-83133J	Workmanship			Pass
ASTM D 6045 - 12(2017)	Color, Saybolt	Report Only		+22
ASTM D 3242 - 11 (2017)	Total Acid Number (mg KOH/g)		0.015	0.004
ASTM D 1319 - 15	Aromatics (% vol)		25.0	18.9
ASTM D 4294 - 16e1	Total Sulfur (% mass)		0.30	0.13
ASTM D 3227 - 16	Mercaptan Sulfur (% mass)		0.002	0.001
ASTM D 86 - 17	Distillation			
	Initial Boiling Point (°C)			150
	10% Recovered (°C)		205	167
	20% Recovered (°C)			174
	50% Recovered (°C)			194
	90% Recovered (°C)			236
	End Point (°C)		300	259
	Residue (% vol)		1.5	1.2
	Loss (% vol)		1.5	0.2
ASTM D 93 - 16a	Flash Point (°C)	38		43
ASTM D 4052 - 16	API Gravity @ 60°F	37.0	51.0	47.0
ASTM D 4052 - 16	Density @ 15°C (kg/L)	0.775	0.840	0.792
ASTM D 5972 - 16	Freezing Point (°C)		-47	-52
ASTM D 445 - 17a	Viscosity @ -20°C (mm^2/s)		8.0	3.6
ASTM D 3338 - 09 (2014)e2	Net Heat of Combustion (MJ/kg)	42.8		43.3
ASTM D 3343 - 16	Hydrogen Content (% mass)	13.4		13.9
ASTM D 1322 - 15e1	Smoke Point (mm)	25.0		26.0
ASTM D 1840 - 07 (2017)	Naphthalenes (% vol)		3.0	1.0
ASTM D 976 - 06 (2016)	Cetane Index, Calculated	Report Only		45
ASTM D 130 - 12	Copper Strip Corrosion (2 h @ 100°C)	1 (Max)		1a
ASTM D 3241 - 17a	Thermal Stability @ 260°C			
	Change in Pressure (mmHg)		25	0
	Tube Deposit Rating, Ellipsometric (nm)		85	14
ASTM D 5006 - 11 (2016)	FSII (% vol)	0.04	0.20	0.09
ASTM D 2624 - 15	Conductivity (pS/m)	50	700	160
ASTM D 381 - 12 (2017)	Existent Gum (mg/100 mL)		7	1
ASTM D 1094 - 07 (2013)	Water Reaction Interface Rating	1b (Max)		1

* Date reflects Eastern Standard Time(EST) +14 hours | Report Generated: 11/24/17 20:34*
** Date as provided by customer

AFPET LABORATORY REPORT

AFPET/PTPLG
Aerospace Fuels Laboratory
Unit 5161, Building 854
Kadena AB 96368-5161
Japan

Lab Report No:2017LG07075001 Date Received:11/23/17 1439 hrs* Date Sampled: 11/22/2017**
Cust Sample No:NAVY INCIDENT Date Reported:11/24/17 2033 hrs* Protocol:FU-AVI-0013

Sample Submitter:
SIB - Kadena
No Address Available
FPO, AP 96368

Reason for Submission: Aircraft Crash/Incident IAW T.O. 42B-1-1
Product: Aviation Turbine Fuel, Kerosene
Specification: MIL-DTL-83133J Grade:JP-8

Source: 08L-589 Qty Submitted: 2 gal Qty Rep: 6,000 gal

Method	Test	Min	Max	Result
ASTM D 7224 - 14	MSEP	70		84
MIL-DTL-83133J	Particulate Matter (mg/L)			0.3
MIL-DTL-83133J	Filtration Time (min)		15	3
ASTM D 7797 - 17	Fatty Acid Methyl Esters (FAME) Content (mg/kg)		50	<10
GC	Gas Chromatographic Analysis			See Below
ASTM D 5001 - 10 (2014)	Lubricity Test (BOCLE) Wear Scar (mm)	Report Only		0.61

Dispositions:
Material meets specification requirements with respect to the test(s) conducted.
For information purposes only.
Coordinated with [redacted]
Gas Chromatographic Analysis did not detect any contamination.

Approved By	**Date**
[redacted]	11/24/2017*

\\SIGNED\\

This report was electronically delivered to:
[redacted], [redacted], [redacted],
[redacted], [redacted]

* Date reflects Eastern Standard Time(EST) +14 hours | Report Generated: 11/24/17 20:34*
** Date as provided by customer

(b) (3) (A), (b) (6) LT (LCC-19)

From: (b) (3) (A), (b) CAPT (LCC-19)
Sent: Sunday, April 15, 2018 11:35 AM
To: (b) (3) (A), (b) (6) LT USN, CTF70
Cc: (b) (3) (A), (b) (6) ; (b) (3) (A), (b) LT (LCC-19); (b) (3) (A), (b) CAPT (LCC-19)
Subject: FW: C-2A Mishap Fuels Samples
Signed By: (b) (3) (A), (b) (6)

(b) (3)
(A) (b)
Latest (and likely last before the 16th) on the PW 30 fuel samples.

Vr,
Capt

CAPT (b) (3) (A), (b) (6)
CO USS Blue Ridge (LCC 19)
Cell: (b) (3) (A), (b)

-----Original Message-----
From: (b) (3) (A), (b) (6) CIV AD
Sent: Friday, April 13, 2018 8:46 AM
To: (b) (3) (A), CIV FRC-SW, 4.3.5
Cc: (b) (3) (A), (b) (6) CIV NAVAIR 4.4.5; (b) (3) (A), (b) (6) CIV NAVAIR 4.4.5.1; (b) (3) (A), (b) CIV NAVAIR, 4.4; (b) (3) (A), (b) CIV AD, 4.4.5.1
Subject: RE: C-2A Mishap Fuels Samples

(b)
(3)
The fuel samples have been submitted to AIR-4.4's Chemistry lab for analysis and testing is ongoing. We should be able to share preliminary results NLT the end of next week (April 20).

Two of the fuel samples contained a water bottom (around 20mL) and high particulate contamination.
BUNO 162154 11/22/17 @ 2300 STBD
BUNO 162154 11/22/17 @ 2300 PORT

The particulate contamination was isolated and transferred to AIR-4.3 for analysis. We will include their preliminary results in our update next week.

The filters (low and high pressure filters in addition to an APU filter) that we received were visually inspected and some were even disassembled and inspected. None of the filters showed signs of abnormalities or indications of poor performance or contained significant particulate material.

Our plan is to release a final report of AIR-4.4's & AIR-4.3's findings by the end of April.

Please let me know if you have any questions or concerns.

Thanks,
[redacted]

[redacted]
Fuels Chemistry Team Lead, AIR-4.4.5.1
Naval Air Warfare Center Aircraft Division
22229 Elmer Rd, Bldg 2360
Patuxent River, MD 20670
Voice: [redacted]
DSN: [redacted]
Fax: [redacted]

-----Original Message-----
From: [redacted] CIV NAVAIR 4.4.5
Sent: Wednesday, March 28, 2018 1:40 PM
To: [redacted] CIV FRC-SW, 4.3.5
Cc: [redacted] CIV NAVAIR 4.4.5.1; [redacted] CIV AD
Subject: C-2A Mishap Fuels Samples

[redacted]

Apologize for not sending this out sooner but still digging out from being on TDY for two weeks.

Now that the Fuels team has the bulk of the samples in hand I have assigned [redacted] (copied on this email), the team's lead chemist, to take the lead for the fuels team portion of the investigation. Please use [redacted] as your primary POC for any questions, information etc.

Since [redacted] is out of the office for the rest of the week I will provide a quick update on the samples received.

We received 25 fuel samples on 3/27/2018. Below is the sample information for the received:

All of the following samples, except for Set 6, were labeled with "30 BUNO 162154". Additionally, all the samples were in quart bottles with the exception of Set 4, which came in mason jars.

Set 1: 8 samples were taken on 11/22/2017 @ 2300 (no time zone was provided with the samples)

-Sample information:

STBD01 - sample has a water bottom (around 20mL) and high particulate contamination

PORT01 - sample has a water bottom (around 20mL) and high particulate contamination

STBD02 , STBD03, STBD04 - no water bottom and minimal

particulate contamination
PORT02, PORT03, PORT04 - no water bottom and minimal particulate contamination
Set 2: 4 samples were taken on 11/23/2017 @ 0530. 2 samples from STBD and 2 samples from PORT. No particulate contamination visible.
Set 3: 4 samples were taken on 11/23/2017 @ 1800. 2 samples from STBD and 2 samples from PORT. No particulate contamination visible.
Set 4: 4 samples were taken on 11/27/2017 (no time provided with samples). 2 samples from STBD and 2 samples from PORT. No particulate contamination visible.
Set 5: 4 samples were taken on 12/01/2017 @ 0830. 1 samples from STBD and 3 samples from PORT. No particulate contamination visible.
Set 6: 1 sample was in a shipping container with no other samples. The sample is labeled with "6A2 0153". However, this label is hard to read. The sample has no particulate contamination visible.

In the shipment received yesterday there were no lubricant samples. From previous feedback we were expecting lubricants samples to be provided. Do you know if there are any other samples still to be shipped or in transit?

Best,

(b) (3)
(b) (3) (A), (b) (6)
Senior Scientific Technical Manager: Energy and Fuels
NAVAIR

VALID TIME:	WEDNESDAY 22/06L – 23/06L	THURSDAY 23/06L – 24/06L	FRIDAY 24/06L – 25/06L
0600-1800	VCSH	SHRA & TSRA	VCSH
1800-0600	SHRA & TSRA	SHRA & TSRA	BKN
VIS (NM) / PRECIP	UNR; 3-5 IN SHRA/ 1-3 IN TSRA	UNR; 3-5 IN SHRA/ 1-3 IN TSRA	UNR; 3-5 IN SHRA
WINDS (KTS)	E 20-25 BCMG SE 15-20 AFTN DCRS SE 10-15 EVNG BCMG VRB 10-15 OVNT	VRB 10-15 BCMG NNW 15-20 AFTN BCMG NNE 20-25G30 EVNG	NNE 20-25G30 BCMG NE 25-30 MRNG
SEAS (FT)	NE 6-8 BCMG ENE 4-6 OVNT	ENE 4-6 BCMG NNE 6-8 OVNT	NNE 6-8 BLDG NNE 8-10 EVNG
SST (F)	77-81	77-81	77-81
AIR TEMP H // L (F)	81 // 77	82 // 77	79 // 75
QO DIVISION (b) (3) (A), (b) (6) [redacted]	SUNRISE: 0642I (22nd) MOONRISE: 0932I (22nd) SUNSET: 1727I (22nd) MOONSET: 2030I (22nd) 13%	SUNRISE: 0643I (23rd) MOONRISE: 1019I (23rd) SUNSET: 1727I (23rd) MOONSET: 2119I (23rd) 20%	SUNRISE: 0644I (24th) MOONRISE: 1103I (24th) SUNSET: 1727I (24th) MOONSET: 2210I (24th) 29%