TECHNICAL MANUAL

AVIATION-CREW SYSTEMS

AIRCREW PERSONAL PROTECTIVE EQUIPMENT

(CLOTHING)

This manual supersedes NAVAIR 13-1-6.7-2, DTD 1 May 1999, and all changes thereto

DISTRIBUTION STATEMENT C. Distribution authorized to U.S. Government agencies only and their contractors to protect publications required for official use or for administrative or operational purposes only, determined on 1 April 2007. Other requests for this document shall be referred to Department of the Navy, Commander, Attn: PMA-202, Bldg 2272, Suite 347, COMNAVAIRSYSCOMHQ, RADM William A. Moffett Building, 47123 Buse Road, Patuxent River, MD 20670-1547.

DESTRUCTION NOTICE — For unclassified, limited documents, destroy by any method that will prevent disclosure of contents or reconstruction of the document.

Published by Direction of the Commander, Naval Air Systems Command

0813LP1063392

1 APRIL 2007

LIST OF EFFECTIVE PAGES

Insert latest changed pages; dispose of superseded pages in accordance with applicable regulations.

NOTE: On a changed page, the portion of the text affected by the latest change is indicated by a vertical line, or other change symbol, in the outer margin of the page. Changes to illustrations are indicated by miniature pointing hands. Changes to wiring diagrams are indicated by shaded areas.

Dates of issue for original and changed pages are:

Original . . . . . 1 Apr 2007

Total number of pages in this manual is 748 consisting of the following:

Page No.	#Change No.	Page No.	#Change No.	Page No.	#Change No.
Title	0	4-1 - 4-51	0	9-1 - 9-3	0
A	0	4-52 Blank	0	9-4 Blank	0
i - xxv	0	5-1 - 5-239	0	10-1 - 10-11	0
xxvi Blank	0	5-240 Blank	0	10-12 Blank	0
1-1 - 1-3	0	6-1 - 6-145	0	A-1 - A-17	0
1-4 Blank	0	6-146 Blank	0	A-18 Blank	0
2-1 - 2-5	0	7-1 - 7-51	0	Glossary-1 - Glossary-5	0
2-6 Blank	0	7-52 Blank	0	Glossary-6 Blank	0
3-1 - 3-121	0	8-1 - 8-24	0	Index-1 - Index-36	0
3-122 Blank	0				

Major changes resulting from this change are as follows:

1. Miscellaneous changes.

Zero in this column indicates an original page.

TABLE OF CONTENTS

Chapter			Page
1	INTRODUCTION		
	1-1.	General	1-1
	1-7.	Description of NAVAIR 13-1-6.7-2	1-2
	1-17.	Levels of Maintenance	1-2
	1-19.	Supplementary Publications	1-3
2	MAINTENANCE CONCEPTS, SCHEDULING AND DOCUMENTATION		
	(Section 2-1. Maintenance Concepts)		
	2-1.	General	2-1
	(Section 2-2. Maintenance Scheduling)		
	2-5.	General	2-1
	(Section 2-3. Accident Evaluation)		
	2-7.	Aircraft Accident Report Inspection	2-1
	(Section 2-4. Maintenance Documents)		
	2-10.	General	2-2
	(Section 2-5. Illustrated Parts Breakdown Information)		
	2-13.	General	2-2
	2-16.	Group Assembly Parts List	2-2
	2-25.	Numerical Index	2-3
3	GENERAL PURPOSE FLIGHT CLOTHING		
	(Section 3-1. Description)		
	3-1.	General	3-1
	3-3.	Configuration	3-1
	(Section 3-2. Flyer's Summer Coverall, Fire Resistant)		
	3-5.	General	3-2
	3-7.	Configuration	3-2
	3-11.	Application	3-2
	3-13.	Fitting	3-2
	3-16.	Modifications	3-2
	3-20.	Maintenance	3-8
	3-22.	Inspection	3-8
	3-29.	Repairs and Fabrications	3-10
	3-37.	Optional Leg Closure Hook and Pile Fastener Fabrication	3-18

TABLE OF CONTENTS (Cont)

Chapter Page

(Section 3-3. Cold Weather Flyer's Coveralls, CWU-64/P)

3-38. General 3-21
3-40. Configuration 3-21
3-42. Application 3-21
3-44. Fitting 3-21
3-46. Modifications 3-21
3-48. Maintenance 3-21
3-50. Inspection 3-21
3-56. Repairs and Fabrications 3-25

(Section 3-4. Improved Aircrew Battle Drss Uniform (IABDU))

3-60. General 3-28
3-62. Configuration 3-28
3-64. Application 3-28
3-66. Fitting 3-28
3-69. Modifications 3-28
3-71. Maintenance 3-28

(Section 3-5. CWU-36/P Summer Flyer's Jacket)

3-80. General 3-35
3-82. Configuration 3-35
3-84. Application 3-35
3-86. Fitting 3-35
3-88. Modifications 3-35
3-90. Maintenance 3-36
3-92. Inspection 3-36
3-98. Repairs and Fabrications 3-37

(Section 3-6. Type G-1, Intermediate Flyer's Jacket)

3-100. General 3-38
3-102. Configuration 3-38
3-104. Application 3-38
3-106. Fitting 3-38
3-108. Modifications 3-38
3-110. Maintenance 3-38
3-112. Inspection 3-38

(Section 3-7. CWU-45/P Cold Weather Flyer's Jacket)

3-118. General 3-41
3-120. Configuration 3-41
3-122. Application 3-41
3-124. Fitting 3-41
3-126. Modifications 3-41
3-128. Maintenance 3-41
3-130. Inspection 3-41
3-136. Repairs and Fabrications 3-44

TABLE OF CONTENTS (Cont)

Chapter Page

(Section 3-8. CWU-18/P Extreme Cold Weather Trousers)

3-141. General 3-48
3-143. Configuration 3-48
3-145. Application 3-48
3-147. Fitting 3-48
3-149. Modifications 3-48
3-151. Maintenance 3-48
3-153. Inspection 3-48
3-159. Repairs and Fabrications 3-49

(Section 3-9. Multi-Climate Protection System (MCPS))

3-161. General 3-51
3-163. Configuration 3-51
3-165. Application 3-56
3-167. Modifications 3-56
3-169. Sizing/Fitting 3-56
3-171. Maintenance 3-59

(Section 3-10. CWU-23/P Liner)

3-180. General 3-61
3-182. Configuration 3-61
3-184. Application 3-61
3-186. Fitting 3-61
3-188. Modifications 3-61
3-190. Maintenance 3-61
3-192. Inspection 3-61
3-200. Storage 3-64

(Section 3-11. CWU-72/P Liner)

3-202. General 3-64
3-204. Configuration 3-64
3-206. Application 3-64
3-208. Fitting 3-64
3-210. Modifications 3-64
3-212. Maintenance 3-64
3-214. Inspection 3-66
3-221. Storage 3-67

(Section 3-12. CWU-81/P and CWU-82/P Liners)

3-223. General 3-67
3-225. Configuration 3-67
3-227. Application 3-67
3-229. Fitting 3-67
3-231. Modifications 3-67
3-233. Maintenance 3-69
3-235. Inspection 3-69
3-242. Storage 3-71

TABLE OF CONTENTS (Cont)

Chapter Page

(Section 3-13. U.S.I.A. Military Exotherm Fleece Jumpsuit (SAR Swimmer's Only)

3-244. General 3-71
3-246. Procurement 3-71
3-247. Modifications 3-71
3-249. Maintenance 3-71
3-251. Inspection 3-71

(Section 3-14. Cold Weather Fiber Pile Liners)

3-259. General 3-73
3-261. Configuration 3-73
3-263. Application 3-73
3-265. Fitting 3-73
3-267. Modifications 3-74
3-269. Maintenance 3-74
3-271. Inspection 3-74

(Section 3-15. Cold Weather Liners)

3-278. General 3-75
3-280. Configuration 3-75
3-282. Application 3-75
3-284. Fitting 3-76
3-286. Modifications 3-76
3-288. Maintenance 3-76
3-290. Inspection 3-76

(Section 3-16. CWU-43/P and CWU-44/P Cold Weather Underwear)

3-297. General 3-77
3-299. Configuration 3-77
3-302. Application 3-77
3-304. Fitting 3-77
3-306. Modifications 3-78
3-308. Maintenance 3-78
3-310. Inspection 3-78
3-316. Repairs and Fabrications 3-79

(Section 3-17. SAR/CSAR Danner Recon Boot)

3-318. General 3-79
3-320. Configuration 3-79
3-322. Application 3-79
3-324. Fitting 3-79
3-326. Procurement 3-79
3-328. Modifications 3-80
3-330. Maintenance 3-80
3-332 Inspection 3-80
3-337. Repairs and Fabrication 3-81

TABLE OF CONTENTS (Cont)

Chapter Page

(Section 3-18. Brown Leather Flyer's Boot, (Belleville 330 ST))

3-339. General 3-81
3-341. Configuration 3-81
3-343. Application 3-81
3-345. Fitting 3-81
3-347 Procurement 3-81
3-349. Modifications 3-82
3-351. Maintenance 3-82
3-353 Inspection 3-82
3-358. Repairs and Fabrications 3-82

(Section 3-19. Aircrew Safety Boot)

3-361. General 3-83
3-363. Configuration 3-83
3-365. Application 3-83
3-367. Fitting 3-83
3-369. Modifications 3-83
3-371. Maintenance 3-83
3-373. Inspection 3-83
3-378. Repairs and Fabrications 3-84

(Section 3-20. Belleville 800 ST Waterproof Black Safety Toe Flight and Flight Deck Boot)

3-380. General 3-85
3-382. Configuration 3-85
3-384. Application 3-85
3-386. Fitting 3-85
3-388. Procurement 3-85
3-390. Modifications 3-86
3-392. Maintenance 3-86
3-394. Inspection 3-86
3-399. Repairs and Fabrications 3-87
3-401. Resole Option 3-87

(Section 3-21. Intermediate Cold Weather Safety Toe Boot)

3-403. General 3-87
3-405. Configuration 3-87
3-407. Application 3-87
3-409. Fitting 3-87
3-411. Modifications 3-88
3-413. Maintenance 3-88
3-415. Inspection 3-88
3-420. Repairs and Fabrications 3-89

(Section 3-22. Desert Tan Flyer's Boot (Belleville 330 DES ST)

3-422. General 3-90
3-424. Configuration 3-90

TABLE OF CONTENTS (Cont)

Chapter		Page
3-426.	Application	3-90
3-428.	Fitting	3-90
3-430.	Procurement	3-90
3-432.	Modifications	3-90
3-434.	Maintenance	3-90
3-436.	Inspection	3-90
3-441.	Cleaning	3-91
3-443.	Repairs and Fabrications	3-92
3-445.	Resole Option	3-92
	(Section 3-23. Belleville 340 DES ST Hot Weather Safety Toe Flight Boot)	
3-447.	General	3-92
3-449.	Configuration	3-92
3-451.	Application	3-92
3-453.	Fitting	3-92
3-455.	Procurement	3-93
3-457.	Modifications	3-93
3-459.	Maintenance	3-93
3-461.	Inspection	3-93
3-466.	Cleaning	3-94
3-468.	Repairs and Fabrications	3-94
3-470.	Resole Option	3-94
	(Section 3-24. All Weather Sock System)	
3-472.	General	3-95
3-474.	Configuration	3-95
3-476.	Application	3-95
3-478.	Fitting	3-95
3-480.	Modifications	3-95
3-482.	Maintenance	3-95
3-484.	Inspection	3-96
	(Section 3-25. Insulating Insoles)	
3-491.	General	3-97
3-493.	Configuration	3-97
3-495.	Application	3-97
3-497.	Fitting	3-97
3-499.	Modifications	3-97
3-501.	Maintenance	3-97
3-503.	Inspection	3-97
3-508.	Cleaning	3-98
	(Section 3-26. Slip Protectors)	
3-509.	General	3-98
3-511.	Configuration	3-98
3-513.	Application	3-98
3-515.	Modifications	3-98
3-517.	Maintenance	3-98
3-519.	Inspection	3-98

TABLE OF CONTENTS (Cont)

Chapter Page

(Section 3-27. GS/FRP-2 Fire-Resistant Flyer's Glove)

3-524. General 3-100
3-526. Configuration 3-100
3-528. Application 3-100
3-530. Fitting 3-101
3-532. Modifications 3-101
3-534. Maintenance 3-101
3-536. Inspection 3-101

(Section 3-28. MAX GRIP NT "DIGI" Leather Flight Glove)

3-543. General 3-102
3-545. Configuration 3-102
3-547. Application 3-102
3-549. Fitting 3-102
3-551. Procurement 3-102
3-553. Maintenance 3-103
3-555. Inspection 3-103

(Section 3-29. HAU-6/P Lined Gloves)

3-562. General 3-104
3-564. Configuration 3-104
3-566. Application 3-104
3-568. Fitting 3-104
3-570. Modifications 3-104
3-572. Maintenance 3-104
3-574. Inspection 3-104

(Section 3-30. HAU-14/P Cold/Wet Protective Flyer's Glove)

3-581. General 3-106
3-583. Configuration 3-106
3-585. Application 3-106
3-587. Fitting 3-106
3-589. Modifications 3-107
3-591. Maintenance 3-107
3-593. Inspection 3-107

(Section 3-31. HAU-15/P Intermediate Cold Weather Flyer's Glove)

3-600. General 3-109
3-602. Configuration 3-109
3-604. Application 3-109
3-606. Fitting 3-110
3-608. Modifications 3-110
3-610. Maintenance 3-110
3-612. Inspection 3-110

(Section 3-32. Heavy Duty Leather Gloves)

3-619. General 3-111

TABLE OF CONTENTS (Cont)

Chapter		Page
3-621.	Configuration	3-111
3-623.	Application	3-111
3-625.	Fitting	3-111
3-627.	Modifications	3-111
3-629.	Maintenance	3-111
3-631.	Inspection	3-112
	(Section 3-33. Pre-Flight Gloves)	
3-637.	General	3-113
3-639.	Configuration	3-113
3-641.	Application	3-113
3-643.	Fitting	3-113
3-645.	Modifications	3-113
3-647.	Maintenance	3-113
3-649.	Inspection	3-113
3-654.	Cleaning	3-113
3-656.	Repairs and Fabrications	3-113
	(Section 3-34. Silk Gloves Liners)	
3-658.	General	3-114
3-660.	Configuration	3-114
3-662.	Application	3-114
3-664.	Modifications	3-114
3-666.	Maintenance	3-115
3-668.	Inspection	3-115
	(Section 3-35. HAU-12/P Anti-Exposure Mittens)	
3-675.	General	3-116
3-677.	Configuration	3-116
3-679.	Application	3-116
3-681.	Modifications	3-116
3-683.	Maintenance	3-116
5-685.	Inspection	3-116
5-691.	Leak Test	3-117
	(Section 3-36. Anti-Flash Hood)	
3-695.	General	3-118
3-697.	Configuration	3-118
3-699.	Application	3-118
3-701.	Modifications	3-118
3-703.	Maintenance	3-118
3-705.	Inspection	3-118
	(Section 3-37. HGU-32/P Anti-Exposure Hood)	
3-712.	General	3-119
3-714.	Configuration	3-119

TABLE OF CONTENTS (Cont)

Chapter			Page
	3-716.	Application	3-119
	3-718.	Modifications	3-119
	3-720.	Maintenance	3-119
	3-722.	Inspection	3-119
	5-728.	Leak Test	3-120
4	ANTI-g GARMENTS		
		(Section 4-1. Description)	
	4-1.	General	4-1
	4-3.	Configuration	4-1
	4-5.	Application	4-1
		(Section 4-2. CSU-15/P, CSU-13B/P and CSU-15A/P Anti-g Garments)	
	4-7.	General	4-1
	4-9.	Configuration	4-1
	4-11.	Application	4-1
	4-13.	Fitting	4-2
	4-20.	Modifications	4-14
	4-23.	Maintenance	4-17
		(Section 4-3. Leak Test Fixture)	
	4-38.	General	4-24
	4-40.	Configuration	4-24
		(Section 4-4. CSU-21/P22P-16 Counter Pressure Vest)	
	4-43.	General	4-25
	4-45.	Configuration	4-25
	4-47.	Application	4-25
	4-49.	Modifications	4-25
	4-51.	Service Life	4-25
	4-53.	Fitting	4-25
	4-55.	Maintenance	4-26
	4-57.	Inspection	4-26
	4-64.	CSU-21/P22P-16 Vest Bladder Leak Test	4-27
	4-66.	Test Set-up	4-28
	4-67.	Test Procedures	4-28
	4-71.	Securing TTU-551/E Test Set	4-31
	4-72.	Repair/Replacement	4-31
	4-84.	Replacement of Vest Valve Assembly	4-35
	4-87.	Cleaning	4-35
		(Section 4-5. CSU-20/P22P-16 Anti-g Garment)	
	4-89.	General	4-36
	4-91.	Configuration	4-36
	4-93.	Application	4-36
	4-95.	Modifications	4-36
	4-97.	Fitting	4-36
	4-100.	Maintenance	4-38
	4-102.	Inspection	4-38

TABLE OF CONTENTS (Cont)

Chapter			Page
	4-110.	Service Life	4-39
	4-112.	Repair	4-39
	4-122.	Replacement of Anti-g Hose Connector	4-42
	4-125.	g-Sense Line Disassembly and Installation	4-43
	4-128.	Cleaning	4-44
		(Section 4-6. TTU-551/E Leakage Tester Preoperational Check)	
	4-129.	General	4-44
	4-131.	Preoperational Check Procedure	4-44
	4-133.	Special Tools	4-45
5	ANTI-EXPOSURE ASSEMBLIES		
		(Section 5-1. Description)	
	5-1.	General	5-1
	5-3.	Configuration	5-1
	5-7.	Application	5-1
		(Section 5-2. A/P22P-6 Series Anti-Exposure Apparel Assemblies, Constant Wear)	
	5-10.	General	5-3
	5-12.	Configuration	5-3
	5-21.	Supplementary Equipment	5-10
	5-24.	Application	5-10
	5-26.	Function	5-10
	5-29.	Modifications	5-10
	5-31.	Sizing	5-10
	5-34.	Fitting	5-11
	5-39.	Donning	5-15
	5-41.	Doffing	5-15
	5-44.	Maintenance	5-21
	5-50.	CWU-62/P and CWU-62A/P Pre-Initial Issue Inspection	5-22
	5-56.	Water Test Device	5-26
	5-58.	Cleaning	5-34
	5-61.	Repairs and Fabrications	5-35
		(Section 5-3. Flyers Ruggedized Anti-Exposure Coveralls Assembly)	
	5-93.	General	5-75
	5-95.	Technical Data Indoctrination Package	5-75
	5-97.	Configurations	5-75
	5-112.	Donning	5-99
	5-114.	Doffing	5-99
	5-116.	Maintenance	5-99
	5-122.	Definitions	5-101
	5-124.	Damage Dimensions	5-101
	5-126.	Individual Component Repair Limits	5-102
	5-128.	Storage	5-103
	5-134.	Organizational Level (O-Level) Maintenance	5-104
	5-153.	O-Level Maintenance Inspections	5-112
	5-164.	Intermediate Level (I-Level) Maintenance	5-125
	5-170.	I-Level Repair and Fabrication Procedures	5-134
	5-175.	I-Level Procedures for Repairing/Patching Large Rips or Tears	5-140

TABLE OF CONTENTS (Cont)

Chapter		Page
5-176.	I-Level Procedures for Repairing/Patching Large Holes	5-142
5-177.	I-Level Procedures for Repairing/Patching Large Porous Areas	5-142
5-184.	I-Level Repairing of Nicks/Gouge, Split/Crack or Pits in Neoprene Gasket of Wrist Seal Unit	5-147
	(Section 5-4. OTS-600 Dry Suit, Style 601GBR005B)	
5-190.	General	5-152
5-192.	Procurement	5-152
5-198.	Configuration	5-152
5-200.	Application	5-152
5-202.	Sizing	5-152
5-204.	Fitting	5-154
5-207.	Donning and Doffing	5-155
5-210.	Warranty Information	5-155
5-212.	Modifications	5-155
5-214.	Maintenance	5-155
5-218.	Inspection	5-155
5-222.	Initial Issue PIS Inspection	5-156
5-223.	PIS Inspection for Removal from Long Term Storage	5-156
5-227.	Water Test Device	5-159
5-229.	Storage	5-167
5-233.	Cleaning	5-167
5-235.	Repairs and Fabrications	5-167
5-239.	Replacement of Neck Seal, First Replacement	5-168
5-240.	Replacement of Neck Seal, Subsequent Replacement	5-168
5-241.	Replacement of Wrist Seals	5-168
5-242.	Replacement of Anti-Exposure Socks	5-168
	(Section 5-5. Aviation Rescue Swimmer's Drysuit (ARSD), MSD560 and MSD565)	
5-247.	General	5-170
5-249.	Procurement	5-170
5-255.	Configuration	5-170
5-257.	Application	5-170
5-259.	Sizing	5-170
5-261.	Fitting	5-174
5-264.	Donning	5-174
5-266.	Doffing	5-174
5-268.	Warranty Information	5-174
5-270.	Modifications	5-174
5-272.	Maintenance	5-174
5-276.	Inspection	5-175
5-282.	Place-In-Service Inspection for Removal from Long Term Storage	5-176
5-285.	Water Leak Test	5-177
5-286.	Storage	5-177
5-290.	Cleaning	5-178
5-292.	Repairs and Fabrications	5-178
5-305.	Replacement of Loose or Missing Hook in Pile Tape	5-180
	(Section 5-6. A/P22P-17 Anti-Exposure Apparel Assembly)	
5-316.	General	5-184
5-319.	Configuration	5-184
5-323.	Application	5-184

TABLE OF CONTENTS (Cont)

Chapter		Page
5-325.	Modifications	5-184
5-327.	Fitting	5-184
5-329.	Donning	5-186
5-331.	Doffing	5-186
5-333.	Maintenance	5-187
5-342.	Storage	5-191
5-347.	Removal of CWU-79/P Neck/Wrist Seals	5-191
	(Section 5-7. CWU-83/P Passenger Anti-Exposure Coverall Ensemble)	
5-351.	General	5-196
5-354.	Configuration	5-196
5-356.	Application	5-196
5-358.	Modifications	5-196
5-360.	Fitting	5-197
5-362.	Donning	5-197
5-363.	Doffing	5-197
5-364.	Maintenance	5-200
5-390.	Maintenance	5-207
	(Section 5-8. A/P22P-7(V) Quick Donning Flyer's Anti-Exposure Apparel Assembly CWU-60/P)	
5-394.	General	5-208
5-396.	Configuration	5-208
5-405.	Application	5-210
5-407.	Fitting	5-210
5-410.	Modifications	5-210
5-412.	Maintenance	5-211
5-416.	Leakage Test	5-212
5-427.	Repairing Cinches and Thumb Loops	5-224
5-428.	Repair and Reinforcement of Face Shield of CWU-60/P, Quick Donning Anti-Exposure Coverall	5-225
	(Section 5-9. Commercial Non-Vented Wet Suit)	
5-430.	General	5-229
5-432.	Configuration	5-229
5-434.	Supplementary Equipment	5-229
5-437.	Application	5-229
5-439.	Maintenance	5-229
	(Section 5-10. Leak Test Fixtures)	
5-454.	General	5-238
5-456.	Configuration	5-238
6	SURVIVAL VESTS	
	(Section 6-1. SV-2B Survival Vest)	
6-1.	General	6-1
6-3.	Configuration	6-1
6-11.	Application	6-1

TABLE OF CONTENTS (Cont)

Chapter		Page
6-13.	Fitting	6-6
6-15.	Donning	6-8
6-20.	Modifications	6-12
6-22.	Maintenance	6-12
6-48.	Fabrication of the Oxygen Mask Stowage Retaining Snap	6-40
	(Section 6-2. CMU-21/P22P-7(V) Survival Vest)	
6-50.	General	6-42
6-52.	Configuration	6-42
6-54.	Application	6-42
6-56.	Modifications	6-42
6-58.	Maintenance	6-42
	(Section 6-3. CMU-23A/P Survival Vest, P/N 1774AS300-1)	
6-63.	General	6-50
6-65.	Configuration	6-50
6-68.	Application	6-50
6-70.	Modifications	6-50
6-72.	Maintenance	6-50
	(Section 6-4. CMU-24/P Survival Vest)	
6-102.	General	6-124
6-104.	Configuration	6-124
6-106.	Application	6-124
6-108.	Initial Fabrication of CMU-24/P Survival Vest	6-124
6-110.	Fitting	6-128
6-114.	Rigging and Packing	6-130
6-116.	Modifications	6-132
6-118.	Maintenance	6-132
6-120.	Special Inspection	6-132
6-122.	Cleaning	6-133
6-124.	Repairs and Replacements	6-133
6-127.	Fabrication of Signal Flare Keeper	6-134
	(Section 6-5. CMU-29(V)2/P CBR Overvest)	
6-130.	General	6-136
6-132.	Configuration	6-136
6-134.	Drawing Index	6-136
6-136.	Application	6-136
6-138.	Installation	6-136
6-143.	Fitting	6-141
6-145.	Modifications	6-142
6-147.	Maintenance	6-142
7	HELICOPTER AIRCREW SURVIVAL AND ARMOR PROTECTIVE ASSEMBLY A/P22P-15	
	(Section 7-1. Description)	
7-1.	General	7-1
7-3.	Configuration	7-1

TABLE OF CONTENTS (Cont)

Chapter Page

(Section 7-2. CMU-30/P22P-15 Survival Vest)

7-6. General 7-2
7-8. Configuration 7-2
7-10. Application 7-4
7-12. Fitting 7-4
7-14. Rigging and Packing 7-4
7-17. Modifications 7-6
7-20. Maintenance 7-6
7-24. Repairs and Replacements 7-8

(Section 7-3. Small Arms Protective Soft and Hard Body Armor PRU-60/P22P-15 and PRU-61/P22P-15)

7-52. General 7-32
7-54. Configuration 7-32
7-57. Application 7-37
7-60. Fitting 7-37
7-62. Maintenance 7-38
7-70. Repair and Replacement 7-40

8 AUXILIARY PERSONAL EQUIPMENT

(Section 8-1. Wrist Watch)

8-1. General 8-1
8-3. Application 8-1
8-5. Function 8-1
8-7. Modifications 8-1
8-9. Maintenance 8-1

(Section 8-2. HGU-4/P Sun Glasses)

8-11. General 8-2
8-13. Application 8-2
8-15. Fitting 8-2
8-17. Modifications 8-2
8-19. Maintenance 8-2

(Section 8-3. Darkness Adaptation Spectacles)

8-22. General 8-3
8-24. Application 8-3
8-26. Fitting 8-3
8-28. Modifications 8-3
8-30. Maintenance 8-3

(Section 8-4. EDU-1/P Neodymium Laser Protective Spectacles)

8-33. General 8-4
8-35. Application 8-4
8-37. Fitting 8-5
8-39. Modifications 8-5
8-41. Maintenance 8-5

TABLE OF CONTENTS (Cont)

Chapter Page

(Section 8-5. FV2 Laser Eye Protection Spectacles (LEPS))

8-44. General 8-5
8-48. Application 8-6
8-50. Fitting 8-7
8-52. Modifications 8-7
8-54. Maintenance 8-7
8-57. Disposal 8-7

(Section 8-6. EDU-5/P Laser Eye Protection Spectacles)

8-59. General 8-8
8-61. Configuration 8-8
8-63. Support Equipment 8-9
8-65. Application 8-9
8-67. Fitting 8-9
8-68. Reference Numbers, Items, and Supply Data 8-12
8-70. Modifications 8-12
8-72. Maintenance 8-12
8-74. Inspection 8-12
8-82. Disposal 8-16
8-85. Illustrated Parts Breakdown 8-17

(Section 8-7. Self-Contained Finger Light)

8-87. General 8-20
8-89. Configuration 8-20
8-91. Application 8-20
8-93. Operation 8-20
8-95. Maintenance 8-20

(Section 8-8. FV-9 Laser Eye Protective Spectacles (LEPS))

8-102. General 8-21
8-105. Application 8-21
8-107. Fitting 8-21
8-109. Modifications 8-21
8-111. Maintenance 8-23
8-116. Disposal 8-24

9 NAVY COMBAT EDGE AIRCREW PROTECTIVE ASSEMBLY A/P22P-16

9-1. General 9-1
9-3. Configuration 9-1

10 CUSTOM FIT AIRCREW FLIGHT CLOTHING

10-1. General 10-1
10-8. Problem Areas 10-3
10-10. Custom-Sized Measurement 10-3
10-26. Example of Completed NAVAIR Form 10126/1 10-10

Appendix A The Metric System and Metric Unit Conversion Charts A-1
Glossary Glossary-1
Alphabetical Index Index-1

LIST OF ILLUSTRATIONS

Figure	Title	Page
3-1.	Flyer's Summer Coveralls	3-3
3-2.	Zipper Modification	3-9
3-3.	Lower Leg Pocket Flap Pattern	3-19
3-4.	Cold Weather Flyer's Coveralls CWU-64/P	3-22
3-5.	CWU-64/P Coverall Nomenclature	3-23
3-6.	Improved Aircrew Battle Dress Uniform (IABDU)	3-29
3-7.	IABDU Coat and Trousers	3-30
3-8.	CWU-36/P Summer Flyer's Jacket	3-35
3-9.	Intermediate Flyer's Jacket, Type G-1	3-40
3-10.	Cold Weather Flyer's Jacket, CWU-45/P with Hood Attached and CWU-18/P Extreme Cold Weather Trousers	3-42
3-11.	Cold Weather Flyer's Jacket, CWU-45/P	3-43
3-12.	CWU-18/P Extreme Cold Weather Trousers	3-50
3-13.	Silkweight Shirt and Trouser	3-52
3-14.	Midweight Shirt and Trouser	3-53
3-15.	Heavyweight Shirt and Trouser	3-53
3-16.	Overall	3-54
3-17.	Fleece Jacket	3-55
3-18.	Fleece Vest	3-55
3-19.	Outershell Jacket and Hood	3-55
3-20.	Outershell Trouser	3-55
3-21.	Faceshield	3-55
3-22.	CWU-23/P Liner	3-62
3-23.	CWU-72/P Liner	3-65
3-24.	CWU-81/P and CWU-82/P Liners	3-68
3-25.	Cold Weather Fiber Pile Liners	3-73
3-26.	CWU-9/P Cold Weather Liners	3-76
3-27.	CWU-43/P Drawers	3-78
3-28.	CWU-44/P Undershirt	3-78
3-29.	SAR/CSAR Danner Recon Boot	3-79
3-30.	Brown Leather Flyer's Boot	3-81
3-31.	Aircrew Safety Boot	3-83
3-32.	Boot with Slide Fastener Insert	3-84
3-33.	Belleville 800 ST Black Flyer's Boot	3-85
3-34.	Intermediate Cold Weather Safety Toe Boot	3-87
3-35.	Desert Tan Flyer's Boot	3-90
3-36.	Belleville 340 DES ST Hot Weather Safety Toe Flight Boot	3-92
3-37.	All Weather Sock System	3-95
3-38.	Insulating Insole	3-97
3-39.	Slip Protectors	3-99
3-40.	Fire-Resistant Flyer's Gloves	3-100
3-41.	MAX GRIP NT "DIGI" Leather Flight Glove	3-102
3-42.	HAU-6/P Lined Gloves	3-104
3-43.	HAU-14/P Cold/Wet Protective Flyer's Glove	3-106
3-44.	HAU-15/P Cold Weather Flyer's Glove	3-109
3-45.	Gloves, Cotton Work (Pre-Flight)	3-114
3-46.	Silk Glove Liner	3-116
3-47.	HAU-12/P Anti-Exposure Mittens	3-116
3-48.	Anti-Flash Hood	3-118
3-49.	HGU-32/P Anti-Exposure Hood	3-120

LIST OF ILLUSTRATIONS (Cont)

Figure	Title	Page
4-1.	CSU-15/P Anti-g Garment	4-4
4-2.	CSU-13B/P Anti-g Garment	4-5
4-3.	CSU-15/P Parts Nomenclature	4-6
4-4.	CSU-13B/P Parts Nomenclature	4-7
4-5.	Proper Alignment of the Custom Fit Knee Hole Panel	4-13
4-6.	Assembly of Hose and Quick Disconnect Fitting	4-13
4-7.	Leakage Tester, TTU-551/E	4-29
4-8.	Fabrication/Installation of Stowage Loop	4-34
4-9.	Anti-g Suit Leak Test Fixture	4-46
4-10.	CSU-20/P22P-16 Enhanced Anti-g Garment Lower Ensemble	4-47
4-11.	CSU-21/P22P-16 Counter Pressure Vest	4-49
5-1.	Anti-Exposure Suit Requirements	5-2
5-2.	A/P22P-6 Series Anti-Exposure Apparel Assemblies, Constant Wear	5-4
5-3.	CWU-62/P Anti-Exposure Coverall	5-7
5-4.	CWU-62A/P Anti-Exposure Coverall	5-7
5-5.	CWU-62B/P Anti-Exposure Coverall	5-8
5-6.	CWU-62C/P Anti-Exposure Coverall	5-9
5-7.	Donning the CWU-62C/P Anti-Exposure Coverall	5-16
5-8.	Doffing the CWU-62C/P Anti-Exposure Coverall	5-17
5-9.	CWU-62/P or CWU-62A/P Anti-Exposure Coverall, Damage Chart	5-18
5-10.	CWU-62B/P Anti-Exposure Coverall, Damage Chart	5-19
5-11.	CWU-62C/P Anti-Exposure Coverall, Damage Chart	5-20
5-12.	Water Test Device	5-27
5-13.	Water Test Device (End View)	5-28
5-14.	Folding Procedures for the CWU-62/P Series Coveralls	5-37
5-15.	Heat Sealer, Seam and Patch	5-44
5-16.	Wrist Seal Unit	5-56
5-17.	Latex Wrist Seal (left) and New Wrist Seal Unit (right)	5-56
5-18.	Wrist Seal Unit	5-60
5-19.	Anti-Exposure Coverall with Wrist Seal Unit	5-60
5-20.	Attachment Seam (LSq-2), Neck Seal to Coverall	5-65
5-21.	Detail of Where the Neck Seal Should Fit on the Aircrewmember	5-66
5-22.	CWU-86/P Men's Flyers' Ruggedized Flyer's Coverall, Front View	5-76
5-23.	CWU-86/P Men's Flyers' Ruggedized Flyer's Coverall, Back View	5-77
5-24.	CWU-87/P Women's Flyers' Ruggedized Flyer's Coverall, Front View	5-78
5-25.	CWU-87/P Women's Flyers' Ruggedized Flyer's Coverall, Back View	5-79
5-26.	Donning Procedures for the CWU-86/P Ruggedized Coverall	5-80
5-27.	Donning Procedures for the CWU-87/P Ruggedized Coverall	5-81
5-28.	Doffing Procedures for the CWU-87/P Ruggedized Coverall	5-82
5-29.	CWU-86/P Flyers' Anti-Exposure Coveralls, Damage Chart	5-85
5-30.	CWU-87/P Flyers' Anti-Exposure Coveralls, Damage Chart	5-86
5-31.	CWU-86/P and 87/P Flyers' Ruggedized Coverall, Folding Procedures	5-87
5-32.	Air Leak Test Device, Assembled	5-92
5-33.	Air Leak Test Fixture, Unassembled and Parts List	5-93
5-34.	Face Plate Assembly (Bottom Plate Inside Suit)	5-93
5-35.	Face Plate Assembly (Top and Bottom Plates Fastened Together)	5-94
5-36.	Water Test Device	5-95
5-37.	Water Test Device (end view)	5-96
5-38.	Heat Sealer, Seam and Patch	5-97
5-39.	Wrist Seal Unit/Sleeve Construction	5-105
5-40.	Neck Seal Unit	5-106
5-41.	Water Test Device (end view)	5-151

LIST OF ILLUSTRATIONS (Cont)

Figure	Title	Page
5-42.	Folding Procedures for CWU-62/P Series Coveralls	5-136
5-43.	OTS-600 Dry Suit, Style 601BR005B	5-153
5-44.	Water Test Device	5-161
5-45.	Water Test Device (end view)	5-162
5-46.	Aviation Rescue Swimmer's Drysuit (ARSD) MSD560	5-171
5-47.	Aviation Rescue Swimmer's Drysuit (ARSD) MSD565	5-172
5-48.	CWU-79/P Passenger Anti-Exposure Survival System (PAESS)	5-185
5-49.	CWU-79/P Series PAESS Coverall Damage Chart	5-188
5-50.	Folding Procedure for CWU-79/P Anti-Exposure Coverall	5-192
5-51.	CWU-83/P Passenger Anti-Exposure Ensemble	5-198
5-52.	Donning Steps for CWU-83/P Passenger Anti-Exposure Ensemble	5-199
5-53.	CWU-83/P Anti-Exposure Ensemble Damage Chart	5-201
5-54.	CWU-60/P Quick Donning Anti-Exposure Coverall	5-209
5-55.	Rubber Circle Dimensions	5-213
5-56.	Leak Test Fixture (Assembled)	5-213
5-57.	Leak Test Fixture	5-214
5-58.	Face Plate Assembly (Bottom Plate Inside Suit)	5-216
5-59.	Face Plate Assembly (Top and Bottom Plates Fastened Together)	5-216
5-60.	Cinches and Thumb Loop Repair	5-227
5-61.	Full-Length Wet Suit	5-230
5-62.	Two-Piece Wet Suit	5-230
5-63.	Vent Inlet Port Position (Suit)	5-234
5-64.	Ventilation Duct Panel Position (Suit)	5-235
5-65.	Vent Inlet Port Position (Pants)	5-236
5-66.	Ventilation Duct Panel Position (Pants)	5-237
5-67.	Wrist Seal Clamp	5-238
5-68.	Anti-Exposure Leak Test Fixture	5-239
6-1.	SV-2B Survival Vest	6-2
6-2.	SV-2B Survival Vest (S-3 Series Use Only)	6-3
6-3.	SV-2B Survival Vest (AV-8 Series Use Only)	6-4
6-4.	SV-2B Parts Nomenclature	6-5
6-5.	Donned SV-2B and LPU Life Preserver	6-9
6-6.	Donned SV-2B, LPU Life Preserver, and PCU-Series Torso Harness	6-11
6-7.	Donned PCU-Series Torso Harness Modified IAW ACC 380 and LPU Life Preserver	6-13
6-8.	Leather Shoulder Holster	6-17
6-9.	Soft Armor With Leather Shoulder Holster	6-18
6-10.	Torso Harness With Leather Shoulder Holster	6-19
6-11.	Hydration/Optional Equipment Pocket With Soft Body Armor and Leather Shoulder Holster	6-20
6-12.	Location of Survival Items in SV-2B	6-22
6-13.	SDU-5/E Distress Signal Light Lanyard	6-23
6-14.	Hook Blade Knife Attachment	6-25
6-15.	SRU-40/P HABD Bottle Pocket Assembly	6-27
6-16.	SRU-40/P HABD Hose Pocket Assembly	6-28
6-17.	SV-2BVest With Flashlight Keeper	6-30
6-18.	Helicopter Rescue Strap for SV-2 Series Survival Vest	6-33
6-19.	Reeving V-Ring	6-33
6-20.	Installation of Oxygen Hose Securing Tab	6-35
6-21.	Installation of the JHMCS Q/D Bracket for Hard to Fit Aircrew	6-36
6-22.	Fabrication of SDU-39/N Distress Strobe Light Lanyard	6-39
6-23.	SV-2B Before ACC 522	6-44
6-24.	SV-2B After ACC 522	6-45
6-25.	Hydration/Optional Equipment Pocket	6-48

LIST OF ILLUSTRATIONS (Cont)

Figure	Title	Page
6-26.	CMU-23A/P Survival Vest (Normal Configuration)	6-51
6-27.	CMU-23A/P Survival Vest (CBR Configuration)	6-52
6-28.	Attachment of CMU-23A/P Survival Vest CBR Components	6-56
6-29.	Fabrication of SRU-40/P HABD Bottle Pocket Assembly	6-58
6-30.	Non-CBR Hose Pocket Assembly	6-59
6-31.	Fabrication of CBR Hose Pocket Assembly	6-61
6-32.	Attachment of Hook Tape to CBR Pusher Fan Battery Pocket	6-64
6-33.	CMU-23A/P Survival Vest (CBR Mode)	6-67
6-34.	CBR Pistol Pocket Snap Fastener Panel	6-68
6-35.	Pistol Pocket Snap Fastener Panel Pattern	6-69
6-36.	Pistol Pocket Snap Fastener Reinforcement Panel Pattern	6-71
6-37.	CBR Vest Snap Fastener Panel	6-73
6-38.	Pistol Pocket Vest Snap Fastener Panel Front Pattern	6-74
6-39.	Pistol Pocket Vest Snap Fastener Patterns	6-76
6-40.	MK-79 Flare Pocket	6-77
6-41.	Flare Pocket Front Side Panel Pattern	6-78
6-42.	Pocket Pull Tab Pattern	6-83
6-43.	Flare Pocket Side Panel Front Pattern	6-84
6-44.	Flare Pocket Side Panel Back Pattern	6-86
6-45.	Flare Pocket Reinforcement Panel Pattern	6-88
6-46.	Survival Knife Pocket	6-89
6-47.	Survival Knife Pocket Main Panel Pattern	6-90
6-48.	Survival Knife Pocket Reinforcement Panel Pattern	6-94
6-49.	Survival Knife Pocket Inside Front Flap Panel Pattern	6-96
6-50.	Survival Knife Pocket Inside Back Flap Panel Pattern	6-98
6-51.	Pusher Fan Pocket (with Battery Pocket and Mounting Bracket)	6-99
6-52.	Pusher Fan Main Panel Pattern	6-100
6-53.	Pusher Fan Side Panel Pattern	6-104
6-54.	Pusher Fan Receiving Bracket Panel Pattern	6-106
6-55.	Pusher Fan Inlet Reinforcement Panel Pattern	6-106
6-56.	Pull Pin Lanyard Pattern	6-107
6-57.	Battery Pocket	6-108
6-58.	Battery Pocket Side Panel Pattern	6-109
6-59.	Battery Pocket Top Back Inside Pattern	6-112
6-60.	Battery Pocket Front Panel Pattern	6-112
6-61.	SRU-40/P HABD Bottle Pocket	6-113
6-62.	HABD Pocket Main Panel Pattern	6-114
6-63.	HABD Pocket Reinforcement Panel Pattern	6-117
6-64.	HABD Pocket Support Panel Pattern	6-119
6-65.	HABD Pocket Snap Panel Stiffener Pattern	6-123
6-66.	CMU-24/P Survival Vest	6-125
6-67.	CMU-24/P Survival Vest Pocket Placement - Right Front	6-126
6-68.	CMU-24/P Survival Vest Pocket Placement - Left Front	6-127
6-69.	Installation of CMU-24/P Vest Pockets	6-129
6-70.	Location of Survival Items, CMU-24/P	6-131
6-71.	CMU-29(V)2/P CBR Overvest	6-137
6-72.	CMU-29(V)2/P CBR Overvest, Interior View	6-137
6-73.	CRU-79/P Oxygen Regulator Pocket, P/N 3298AS320-1	6-138
6-74.	CRU-82/P, CRU-88/P, and CRU-103/P Oxygen Regulator Pocket P/N 3298AS330-1	6-138
6-75.	CMU-29(V)2/P Overvest Integration with CMU-33/P Vest and Torso Harness	6-143

LIST OF ILLUSTRATIONS (Cont)

Figure	Title	Page
7-1.	CMU-30/P22P-15 Survival Vest	7-2
7-2.	Survival Vest with Hard Ballistic Armor Plates	7-3
7-3.	Back Adjustment Strap	7-9
7-4.	Repair/Replacement of Collar Lobe Attachment	7-10
7-5.	Survival Vest Securing (Waist) Belt Assembly	7-12
7-6.	Survival Vest Shoulder Ring (Looploc)	7-13
7-7.	Vest Assembly with Hoisting Harness Installed (Interior)	7-15
7-8.	SAR Lift Hoist Gated D-Ring Installation	7-18
7-9.	Back Flap for Back Hard Ballistic Armor Insert	7-20
7-10.	Fabrication of HABD Bottle Pocket Assembly	7-23
7-11.	Non-CBR Hose Pocket Assembly	7-24
7-12.	Fabrication of CBR Hose Pocket Assembly	7-26
7-13.	Attachment of Hook Tape to CBR Fan Battery Pocket	7-29
7-14	Fabrication of SDU-39/N Distress Strobe Light Lanyard	7-31
7-15.	Soft and Hard Armor Assemblies (PRU-60/P22P-15 and PRU-61/P22P-15)	7-34
7-16.	Hard Ballistic Armor Assemblies - Front and Back	7-36
7-17.	H-Harness Assembly	7-44
7-18.	Armor Beaded Pull Handle	7-46
7-19.	Quick Disconnect Strap	7-48
7-20.	Back Hard Armor Retaining Strap	7-50
8-1.	Aviator's Wrist Watch	8-1
8-2.	HGU-4/P Sun Glasses	8-2
8-3.	Darkness Adaptation Spectacles	8-3
8-4.	EDU-1/P Neodymium Laser Protective Spectacles	8-4
8-5.	FV2 Laser Eye Protection Spectacles	8-6
8-6.	EDU-5/P Laser Eye Protection Spectacles	8-9
8-7.	EDU-5/P Parts Identification	8-14
8-8.	Example Aircrew Systems Record (OPNAV 4790/138)	8-15
8-9.	EDU-5/P Laser Eye Protection Spectacles	8-17
9-1.	Navy Combat Edge A/P22P-16 Aircrew Protective Assembly	9-2
9-2.	NCE A/P22P-16 Aircrew Protective Assembly Functional Diagram	9-3
10-1.	Waistline Location	10-2
10-2.	Aircrew Custom-Sized Clothing Measurement Form	10-3
10-3.	Inseam Measuring Device	10-6
10-4.	Example Completed NAVAIR Form 10126/1	10-10
A-1.	Reference Conversion Charts	A-2

LIST OF TABLES

Table	Title	Page
2-1.	Source, Maintenance, and Recoverability (SM&R) Code Definitions	2-5
3-1.	Flyer's Summer Coverall Sizes and Dimensions	3-5
3-2.	Flyer's Summer Coverall Configurations	3-6
3-3.	Women Flyer's Summer Coverall CWU-27P, Type II, Class 1 Sizes and Dimensions	3-7
3-4.	Repairs/Installations/Fabrications	3-9
3-5.	Slide Fasteners, A-A-55634, for Repair of Flyer's Coveralls	3-14
3-6.	CWU-64/P Sizes and Dimensions	3-24
3-7.	Repairs/Installations/Fabrications	3-25
3-8.	Trousers, IABDU, Sizes and Finished Measurements (In Inches)	3-31
3-9.	Coat, IABDU, Sizes and Finished Measurements (In Inches)	3-32
3-10.	CWU-36/P Jacket Sizes	3-36
3-11.	Repairs/Installations/Fabrications	3-36
3-12.	CWU-45/P Sizes	3-43
3-13.	CWU-45/P Directives	3-44
3-14.	Repairs/Installations/Fabrications	3-44
3-15.	Platform Compatibility	3-51
3-16.	Men's Shirt/Vest/Jacket Sizes	3-57
3-17.	Men's Drawers/Overall Sizes	3-57
3-18.	Women's Shirt/Vest/Jacket Sizes	3-58
3-19.	Women's Drawers/Overall Sizes	3-58
3-20.	Sizing Guide (CWU-23/P Liner)	3-62
3-21.	Sizing Guide (CWU-72/P Liner)	3-65
3-22.	Sizing Guide (CWU-81/P Liner Shirt (Women Only))	3-69
3-23.	Sizing Guide (CWU-82/P Liner Drawers (Women Only))	3-69
3-24.	Exotherm Fleece Jumpsuit Sizing Chart	3-72
3-25.	Fiber Pile Shirt and Overall Sizes	3-74
3-26.	Sizing Guide (CWU-9/P Liners)	3-77
3-27.	Aramid Underwear Sizes	3-78
3-28.	Brown Leather Flyer's Boot Sizes and Dimensions	3-81
3-29.	Aircrew Safety Boot Directives	3-85
3-30.	Intermediate Cold Weather Safety Boot Sizes	3-89
3-31.	Belleville 330 ST Boot Size and NSNs	3-91
3-32.	Belleville 340 DES Hot Weather Safety Toe Flight Boot	3-93
3-33.	Sizing Guide (All Weather Sock System)	3-96
3-34.	Recommended Sources for Slip Protectors	3-100
3-35.	MAX Grip NT "DIGI" Leather Flight Glove	3-103
3-36.	Lined Gloves	3-105
3-37.	Sizing Guide (HAU-14/P)	3-108
3-38.	Sizing Guide (HAU-15/P)	3-109
3-39.	Heavy Duty Leather Glove Sizes	3-112
4-1.	Sizing CSU-13B/P Anti-g Garment	4-2
4-2.	Anti-g Garment Directives	4-14
4-3.	Repairs/Fabrications/Installations	4-15
4-4.	Slide Fasteners (A-A-55634)	4-20
4-5.	Dimensions of Fastener Tape	4-21
4-6.	CSU-21/P22P-16 Counter Pressure Vest Directives	4-26
4-7.	Vest Sizes	4-26
4-8.	CSU-21/P22P-16 Counter Pressure Vest Repairs, Fabrications, and Replacements	4-27

LIST OF TABLES (Cont)

Table	Title	Page
4-9.	CSU-20/P22P-16 Anti-g Garment Directives	4-37
4-10.	CSU-20/P22P-16 Anti-g Garment Sizing Chart	4-37
4-11.	Repairs/Fabrications/Replacements	4-38
4-12.	Lacing Cover Hook and Pile Fastener Lengths (Inches)	4-41
4-13.	Slide Fastener Lengths	4-41
5-1.	Components of A/P22P-6 Series Anti-Exposure Apparel Assemblies, Constant Wear	5-5
5-2.	Recommended Underclothing Based on Water Temperature	5-6
5-3.	Sizing Guide (CWU-62/P, CWU-62A/P and CWU-62B/P Anti-Exposure Coverall)	5-8
5-4.	Sizing Guide (CWU-62C/P Anti-Exposure Coverall)	5-9
5-5.	Sizing Guide (SRU-25/P Rubber Socks)	5-10
5-6.	Sizing Guide (CWU-75/P Anti-Exposure Socks)	5-10
5-7.	Repairs and Fabrications	5-38
5-8.	Replacement Slide Fasteners	5-41
5-9.	Replacement Wrist Seals CWU-62/P Series	5-54
5-10.	Replacement Neck Seal (CWU-62A/P, CWU-62B/P, or CWU-62C/P)	5-64
5-11.	Components for Flyers' Ruggedized Anti-Exposure Coveralls	5-83
5-12.	Recommended Underclothing Based on Water Temperature	5-84
5-13.	Repairs and Fabrications	5-88
5-14.	Replacement Slide Fasteners	5-89
5-15.	Sizing Guide, CWU-86/P (Men)	5-90
5-16.	Sizing Guide, CWU-87/P (Women)	5-90
5-17.	Neck Seal Sizing	5-91
5-18.	Anti-Exposure Socks	5-92
5-19.	Repairs and Fabrications	5-137
5-20.	Sizing Guide for OTS-600 Style 601GBR005B	5-154
5-21.	Sizing Guide for Neck Seals	5-154
5-22.	Sizing Guide for Wrist Seals	5-154
5-23.	Sizing Guide for Socks	5-154
5-24.	Lengths of Slide Fastener	5-169
5-25.	Parts List	5-169
5-26.	ARSD Directives	5-170
5-27.	Sizing Guide for ARSD	5-170
5-28.	Repair Facility Services and Costs	5-181
5-29.	Parts List	5-183
5-30.	CWU-83/P Ordering Information	5196
5-31.	Sizing Guide (CWU-83/P Anti-Exposure Ensemble)	5-197
5-32.	Slide Selection Table For CWU-83/P Anti-Exposure Ensemble	5-206
5-33.	Components of the A/P22P-7(V) Assembly	5-208
5-34.	CWU-60/P Directives	5-211
5-35.	Repairs and Fabrications	5-217
5-36.	Types of Repairs on Glove/Mitten Assembly	5-225
5-37.	Basic Sizing Chart	5-229
5-38.	Authorized Repairs/Fabrications/Installations	5-232

LIST OF TABLES (Cont)

Table	Title	Page
6-1.	SV-2B Drawings Index	6-6
6-2.	SV-2B Directives	6-14
6-3.	Repairs/Fabrications/Installations	6-15
6-4.	CMU-21/P22P-7(V) Directives	6-43
6-5.	Repairs/Fabrications/Installations	6-43
6-6.	CMU-23A/P Directives	6-53
6-7.	Pockets for CMU-24/P Survival Vest	6-128
6-8.	Repairs/Replacement	6-133
6-9.	CMU-29(V)2/P CBR Overvest Drawings Index	6-136
6-10.	Repair/Replacement	6-145
7-1.	Additional Survival Items	7-4
7-2.	Repair/Replacement/Fabrication	7-7
7-3.	CMU-30/P22P-15 Stowage Pocket Patterns	7-20
7-4.	Major Components for Soft and Hard Armor Assemblies	7-33
7-5.	Applicable Combinations	7-37
7-6.	Fitting Soft and Hard Armor Assemblies	7-37
7-7.	Soft and Hard Body Armor Size Combinations	7-38
8-1.	EDU-5/P Size Chart	8-10
A-1.	Symbols and Relationships of Metric Units	A-4
A-2.	Inches to Millimeters Conversion Chart	A-5
A-3.	International System of Units (SI)	A-6
A-4.	Fraction/Decimal/Millimeter Conversion Chart	A-7
A-5.	Metric Unit Conversions	A-8
A-6.	Alphabetical Index of Metric Unit Conversions	A-9

THIS PAGE INTENTIONALLY LEFT BLANK.

CHAPTER 1

INTRODUCTION

1-1. GENERAL.

WARNING

Unauthorized modification to, and deviations from, prescribed life support and survival equipment by individual crewmen could create unknown safety hazards. The OPNAVINST 3710.7 Series specifies minimum requirements for such equipment and is supplemented by the individual model NATOPS.

1-2. The COMNAVAIRFORINST 4790.2 identifies NAVAIRSYSCOM as the only authority for modification to life support and survival equipment, which is usually accomplished by the Fleet Support Team (FST) (formerly Cognizant Field Activity (CFA)) via Aircrew System Changes or a change to the equipment procurement package. This manual also permits an operating activity, with approval of the controlling custodian, to conditionally modify ONE unit of equipment in-service in order to correct or overcome unsatisfactory conditions in that equipment item. Any oth-er type of deviation, peculiar configuration, or modification to life support and survival equipment is not allowed, and Aircrew Survival Equipmentment have no authority or responsibility to perform them.

1-3. If an omission or conflict should occur between FST documents and NATOPS requirements, if there is a need for clarification of equipment configuration, or if equipment deficiencies are discovered, the applicable FST should be notified. The FST for Aircrew Personal Protective Equipment is Naval Air Warfare Center Aircraft Division (NAWCAD) Code 4.6.8.3, NAS Patuxent River, MD, 20670-1906. For parachutes and related hardware, including torso harnesses, the FST is the Naval Air Warfare Center Weapons Division, Code 463000D, China Lake, CA, 93555.

1-4. NAWCAD DET, Indianapolis, IN 46219, has cognizance over all survival radios and emergency beacons.

1-5. The Aviation Crew Systems manual is released under the authority of the Naval Air Systems Command in compliance with the request of the Chief of Naval Operations. The instructions contained herein are mandatory. This manual consists of separately bound volumes, as listed below:

TITLE	PUBLICATION NUMBER
Inflatable Survival Equipment (Liferafts)	NAVAIR 13-1-6.1-1
Inflatable Survival Equipment (Life Preservers)	NAVAIR 13-1-6.1-2
Parachutes	NAVAIR 13-1-6.2
Seat Survival Kits (Oxygen Hoses and Non-SKU Seat Kits)	NAVAIR 13-1-6.3-1
Seat Survival Kits (SKU Series Seat Kits)	NAVAIR 13-1-6.3-2
Oxygen Equipment (Aircraft Equipment, Masks, and Other Systems)	NAVAIR 13-1-6.4-1
Oxygen Equipment (Regulators)	NAVAIR 13-1-6.4-2
Oxygen Equipment (Concentrators)	NAVAIR 13-1-6.4-3
Oxygen Equipment (Converters)	NAVAIR 13-1-6.4-4
Rescue and Survival Equipment	NAVAIR 13-1-6.5
Aircrew Personal Protective Equipment (Aircrew/Passenger Equipment)	NAVAIR 13-1-6.7-1
Aircrew Personal Protective Equipment (Clothing)	NAVAIR 13-1-6.7-2
Aircrew Personal Protective Equipment (Helmets and Masks)	NAVAIR 13-1-6.7-3
Aircrew Personal Protective Equipment (Protective Assembly, Aircrew Survival - Armor)	NAVAIR 13-1-6.7-4
Special Missions Aircrew Equipment	NAVAIR 13-1-6.10

1-6. The purpose of this volume is to provide technical information related to the configuration, application, function, inspection, and maintenance of a particular category of aircrew safety and survival equipment. The information contained in each volume is intended for Organizational, Intermediate, and Depot Levels of maintenance as established within the Naval Aviation Maintenance Program (COMNAVAIRFORINST 4790.2).

1-7. DESCRIPTION OF NAVAIR 13-1-6.7-2.

1-8. CONTENTS. This volume contains information on configuration, application, function, inspection, and maintenance of Aircrew Clothing and Personal Protective Equipment.

1-9. CONFLICTS AND SUPERSEDURES. This volume shall take precedence over all other documents except for effective related Aircrew System Bulletins and Changes, and Interim Aircrew System Bulletins and Changes. These documents are effective until officially rescinded, canceled, or superseded.

1-10. The modifications section of each chapter lists all effective changes which affect Aircrew Personal Protective Equipment and have been issued on or before the date of latest change or revision to this volume. When applicable, the subject matter of these documents has been incorporated within the text of the appropriate chapters.

1-11. Effective changes which affect Aircrew Personal Protective Equipment and are issued between changes and revisions to this volume should be recorded in the modification section of the manual for the affected equipment by annotating the outer margin of the page with a vertical line and the number of the change. A copy of the change should be filed in a separate binder in the ALSS work center. When this volume is updated these documents will be listed in the modification sections of the applicable chapters and the text of the chapters will be updated to reflect the changes.

1-12. UPDATING. These volumes will be updated periodically by the issuance of a revision, which is a 100 percent replacement of pages. Between revisions, changes and rapid action changes will be released, which are partial replacement of pages. All added and changed pages shall be incorporated in these volumes according to page number. Superseded and deleted pages shall be discarded in accordance with the local security procedures for data containing distribution statements. A list of effective pages is provided with each change. A summary of the major changed areas for a particular change or revision is located directly beneath the list of effective pages.

1-13. COMMENTS AND RECOMMENDATIONS. Comments and recommendations shall be submitted using established deficiency reporting systems in accordance with COMNAVAIRFORINST 4790.2.

1-14. ENGINEERING DRAWINGS. Government engineering drawings are available to the fleet by submitting a letter of request to Commanding Officer, Naval Air Technical Data and Engineering Service Command, Naval Air Station North Island, P.O. Box 357031, Building 90 Distribution, San Diego, CA 92135-7031. Each request should include the equipment nomenclature, part number, and CAGE code. The drawings will be provided in the form of aperture cards (Automatic Data Processing Punch Cards). Technical data may also be obtained online at the NATEC website located at http://www.natec.navy.mil. Authorized users must first establish an account prior to obtaining data. Access/account information can be obtained at the NATEC website.

1-15. TECHNICAL DIRECTIVES AND FORMS. NATEC is the central management activity for aeronautical technical publications, engineering drawings and associated technical services. Upon release, NATEC will forward to all designated activities, copies of Technical Directives and Forms. Additional copies are available utilizing the procedures shown in paragraph 1-14 as well as from the PMA-202 website at https://pma202.navair.navy.mil.

1-16. QUALITY ASSURANCE. Quality assurance steps are provided for critical operations. When a step is underlined, the Aircrew Survival Equipmentman shall perform the operation and then have performance verified by a Quality Assurance Representative (CDI-CDQAR-QAR) as established within the Naval Aviation Maintenance Program (COMNAVAIRFORINST 4790.2) prior to proceeding to the next operation. In no case shall an Aircrew Survival Equipmentman perform his/her own quality assurance inspection.

1-17. LEVELS OF MAINTENANCE.

1-18. Maintenance, inspection, repair, and overhaul shall be performed at the established level of maintenance in accordance with and as defined in COMNAVAIRFORINST 4790.2. In cases of necessity, such as at very small activities, Organizational and Intermediate Levels may be combined within local capabilities. It is recognized that, due to conditions other than those assumed here, minor deviations to procedures outlined in this manual may be unavoidable. Prior to forwarding to a depot facility, it shall be definitely determined that maintenance cannot be performed at a lower level.

1-19. SUPPLEMENTARY PUBLICATIONS.

1-20. In addition to Interim Aircrew System Bulletins and Changes, and Aircrew System Bulletins and Changes which are still in effect, the following publications supplement this volume.

6. NAVAIR 00-35QH-2, Allowance List, Aviation Life Support System and Airborne Operation Equipment for Aircraft Squadrons Navy and Marine Corps.

7. OPNAV INSTRUCTION 4790.2 (Series). The Naval Aviation Maintenance Program.

8. NAVSUP Manual, paragraph 25841, Flight Clothing and Operational Equipment, provides instruction for issue of clothing and equipment to designated personnel.

9. COMNAVAIRFORINST 4410.2A.

10. OPNAV INSTRUCTION 3710.7 provides general instructions on required minimums for Aircrew Personal Protective Equipment.

11. NATOPS MANUALS provide information on required Aircrew Personal Protective Equipment.

12. NAVSUP PUBLICATION 2002 lists directives and manuals available from Naval Publications and Forms Center.

13. NAVAIR 13-1-6-8 Work Unit Code Manual lists work unit codes assigned to survival equipment.

14. NAVSUPINST 4423.29 (Series). Naval Material Command (NMC) Uniform Source, Maintenance and Recoverability (SM&R) Codes.

15. NAVAIR 01-1A-509 Cleaning and Corrosion Control Manual.

16. ASTM-D-6193 Standard Practice for Stitches and Seams.

17. P2300, Repairable Assemblies (lists repairable assemblies and applicability of Navy aviation materials).

18. P2310, Supporting Repair Parts (lists supporting parts of Navy aviation materials).

19. NAVSUP P-719 is a Guide for the Assignment and Use of Source, Maintenance and Recoverability (SM&R) Codes.

THIS PAGE INTENTIONALLY LEFT BLANK.

CHAPTER 2

MAINTENANCE CONCEPTS, SCHEDULING AND DOCUMENTATION

Section 2-1. Maintenance Concepts

2-1. GENERAL.

2-2. NAVAL AVIATION MAINTENANCE PROGRAM. All maintenance and inspection actions upon Aviation Life Support Systems (ALSS) equipment shall be made as part of the Naval Aviation Maintenance Program in accordance with COMNAVAIRFORINST 4790.2.

2-3. LEVELS OF MAINTENANCE. Maintenance of ALSS equipment shall be performed at the established level of maintenance in accordance with COMNAVAIRFORINST 4790.2.

2-4. QUALIFIED PERSONNEL. Refer to COMNAVAIRFORINST 4790.2 for qualifications of personnel authorized to perform maintenance actions on ALSS equipment.

Section 2-2. Maintenance Scheduling

2-5. GENERAL.

2-6. INSPECTION CYCLES. Scheduled maintenance requirements for aircraft and man-mounted equipment are published in the applicable aircraft maintenance requirement cards and this manual.

NOTE

To meet unusual situations and facilitate workload scheduling, refer to COMNAVAIRFORINST 4790.2 for authorized deviations to scheduled phase inspection intervals.

Section 2-3. Accident Evaluation

2-7. AIRCRAFT ACCIDENT REPORT INSPECTION.

2-8. Any Aviation Life Support System Equipment along with related subassemblies or equipment which have been recovered following use in an emergency ditching/bailout or ejection (refer to NAVAIR 13-1-6.2 for personnel and drogue parachutes) will be returned to the nearest Naval Supply Activity for shipment via traceable means to: Code 4633, Naval Air Warfare Center Aircraft Division, Bldg 2187, 48110 Shaw Rd., Unit 5, Patuxent River, MD 20670-1906.

NOTE

Under no circumstances will any piece of Aviation Life Support System equipment which has been subjected to ditching/bailout or ejection be returned to service.

2-9. Stencil outside of container in 1-in. letters as follows: THIS EQUIPMENT HAS BEEN USED IN AN EMERGENCY. These items of equipment are required for evaluation and determination of design deficiency and to establish requirements for product improvement.

Section 2-4. Maintenance Documents

2-10. GENERAL.

2-11. DOCUMENTING MAINTENANCE ACTIONS. Upon completion of any maintenance action (e.g., inspections, repairs, modifications), appropriate entries shall be made on applicable maintenance records, in accordance with COMNAVAIRFORINST 4790.2. The entries by the Aircrew Survival Equipmentman shall provide a systematic record of equipment history and the documentation of all maintenance actions performed on the equipment.

2-12. MAINTENANCE DOCUMENTS. Refer to COMNAVAIRFORINST 4790.2 for documents used to record history or to document maintenance actions or for additional information for completion of maintenance records. These records are designed to provide continuous configuration and inspection records throughout the service life of ALSS assemblies and their components.

Section 2-5. Illustrated Parts Breakdown Information

2-13. GENERAL.

2-14. This section explains the Illustrated Parts Breakdown (IPB) for ALSS equipment. The IPB can be found at the end of each chapter where applicable. The IPB should be used during maintenance when requisitioning and identifying parts.

2-15. SYMBOLS AND ABBREVIATIONS. Symbols and abbreviations used in the Illustrated Parts Breakdown are as follows:

Symbol	Definition
---*---	Closure (end) of attaching parts
#	Selected part, only one used
x	By (used in dimensions 12 in. x 6 in.)
&	And
Abbreviation	**Definition**
AR or A/R	As Required
CAGE	Commercial and Government Entity
COML	Commercially available
FIG, Fig	Figure
GAPL	Group Assembly Parts List
GFE	Government Furnished Equipment
IPB	Illustrated Parts Breakdown
L.H.	Left Hand
MAINT	Maintenance
NHA	Next Higher Assembly
No.	Number
RECOVER, RECY	Recoverability
REF	Reference
R.H.	Right Hand
SM&R	Source, Maintenance and Recoverability
Spec. Cont. Dwg. or SCD	Specification Control Drawing

2-16. GROUP ASSEMBLY PARTS LIST.

2-17. The Group Assembly Parts List (GAPL) contains illustrations and parts lists for each major assembly. These illustrations and accompanying lists show how the major assemblies are disassembled into subassemblies and detail parts. Each item illustrated is indexed for identification purposes. Each illustration is accompanied by a parts list providing a part number, description, and quantity for each item. The list is arranged in disassembly order. Through the use of a system of indentation, the relationship of the detail parts to the subassemblies and the relationship of the subassemblies to the main assembly, is shown.

2-18. FIGURE AND INDEX NUMBER COLUMN. The figure and index number of each item shown on the corresponding illustration appears in the Figure and Index Number Column, with the exception of assemblies and subassemblies which are not illustrated in assembled form. In these cases, the assemblies or subassemblies are listed but not indexed. The component parts thereof are both listed and indexed.

2-19. PART NUMBER COLUMN. This column contains the contractor's drawing number, government standard number, vendor drawing number or identifies the part as being commercial hardware (COML). Government standard parts are listed using the applicable MS, AN, AF, NAS, MIL, or JAN part number. Where the part number is controlled by a military specification, this specification number is listed in the Description Column.

2-20. DESCRIPTION COLUMN. This column lists the item name plus those modifiers necessary to identify the item. The description of a vendor-supplied item includes a five-digit number which identifies the manufacturer. This is the Commercial and Government Entity (CAGE) code. To correlate this CAGE code to the manufacturer's name, refer to the cataloging handbook H4/H8. CAGE codes may be omitted for prime manufacturer's parts and for government standard parts. When applicable, contractor's control drawing numbers and reference designations of electronic parts are also listed for general reference. When a separate exploded view is used to show the detail parts of an assembly or subassembly the Description Column contains an appropriate figure cross-reference in parenthesis following the description. This cross-reference appears both in the listing where the assembly is first described, and in the listing which the assembly is broken down. In the latter case, the abbreviation REF will appear in the Units Per Assembly column. Commercial hardware items (COML) are fully described so that they may be procured from normal commercial sources. Parts stocked in kits are identified with kit component code in this column, i.e., KD.

2-21. Indentation. The indentations headed "1" through "7" in the Description Column are provided to show the relationship of assemblies and their detail parts. The detail parts are indented one space to the right and listed below the assembly to which they belong. Determine the next higher assembly (NHA) of any detail part by locating, in the next space to the left (excluding attaching parts) the first item above the detailed part.

```
1 2 3 4 5 6 7

ARTICLE (or MAIN ASSEMBLY)
. Detailed parts for ARTICLE (or MAIN ASSEMBLY)
. ASSEMBLY
    (ATTACHING PARTS)
. ATTACHING PARTS FOR ASSEMBLY
    ---*---
. . Detailed parts for ASSEMBLY
. . SUBASSEMBLY
      (ATTACHING PARTS)
. . ATTACHING PARTS FOR SUBASSEMBLY
      ---*---
. . . Detailed Parts for SUBASSEMBLY
. . . SUB-SUBASSEMBLY
        (ATTACHING PARTS)
. . . ATTACHING PARTS FOR SUB-SUBASSEMBLY
        ---*---
. . . . Detailed parts for SUB-SUBASSEMBLY
```

2-22. Attaching Parts. Attaching parts are items used to attach parts or assemblies to each other and follow immediately after the part to be attached. The attaching parts have the same indentation as the part attached. The caption "(ATTACHING PARTS)" is placed on the line immediately above the listing of attaching parts. The separation symbol ---*--- appears on the line immediately under the last attaching part. Quantities of attaching parts are listed per unit. For example, if two fittings are required for each assembly and one bolt is required to attach each fitting, the correct listing would be:

```
. FITTING ASSEMBLY, Hinge ..................... 2
    (ATTACHING PARTS)
. BOLT ......................................... 1
    ---*---
```

2-23. UNITS PER ASSEMBLY COLUMN. This column shows the quantity of an item required in the next higher assembly. The abbreviation AR indicates when the quantity is "As Required".

2-24. USABLE ON CODE COLUMN. Usable on codes are used to indicate part usage where various models and serial numbers of the equipment or similar parts within the equipment use different parts. A code is assigned to each variation of the equipment and entered into the GAPL when a part is used only in a specified variation. Where no code is entered, the part is used on all units covered by the GAPL or when no variations from the original equipment exist.

2-25. NUMERICAL INDEX.

2-26. The numerical index follows the last GAPL in any chapter and contains all the part numbers listed in all GAPLs, arranged in alphabetical-numerical sequence.

2-27. PART NUMBER COLUMN. This column contains the part numbers of the parts and assemblies. Part number arrangement starts at the extreme left-hand position and continues left to right, one position at a time, according to the following order or precedence:

Space	(blank column)
Diagonal	(Slant)
Point	(period)
Dash	(hyphen)

Letters	A through Z
Numerals	0 through 9

NOTE

Spaces, diagonals, points, and dashes do not appear in the extreme left-hand position of the part numbers. However, they may be used in the second and succeeding positions and take precedence over letters and numbers as indicated above.

2-28. FIGURE AND INDEX NUMBER COLUMN. In this column, the digits preceding the dash refer to the figure in which the parts are illustrated. The digits following the dash are the index numbers.

2-29. SOURCE, MAINTENANCE AND RECOVERABILITY (SM&R) CODE COLUMN. The five digit SM&R codes, assigned by Naval Air Systems Command Representatives are reflected in the SM&R code column. The code format is composed of three parts consisting of a two-position Source Code, a two-position Maintenance Code and a one-position Recoverability Code. See Table 2-1 for basic information.

NOTE

For more complete information on Uniform SM&R Codes, refer to NAVSUPINST 4423.29, OPNAVINST 4410.2A, and NAVSUP P-719.

Table 2-1. Source, Maintenance, and Recoverability (SM&R) Code Definitions

SOURCE			MAINTENANCE			
1ST POS	2ND POSITION		3RD POSITION		4TH POSITION	
MEANS OF ACQUIRING SUPPORT			USE: LOWEST LEVEL AUTHORIZED TO REMOVE/REPLACE THE ITEM		REPAIR: LOWEST LEVEL WITH CAPABILITY AND RESOURCES TO PERFORM COMPLETE REPAIR ACTION	
P	A	ITEM: STOCKED	O	ORG/UNIT	O	ORG/UNIT
	B	ITEM: STOCKED, INSURANCE	2	MINESWEEPER	2	MINESWEEPER
	C	ITEM: STOCKED, DETERIORATIVE	3	SUBMARINES	3	SUBMARINES
	D	ITEM: SUPPORT, INITIAL ISSUE OF OUTFITTING & STOCKED ONLY FOR ADDITIONAL INITIAL ISSUE	4	AUX/AMPHIB	4	AUX/AMPHIB
			5	DESTROYER, FFG	5	DESTROYER, FFG
	E	EQUIPMENT: SUPPORT, STOCKED FOR INITIAL ISSUE OR OUTFITTING OF SPECIFIED MAINTENANCE ACTIVITIES	6	CRUISER/CARRIER	6	CRUISER/CARRIER
	F	EQUIPMENT: SUPPORT, NON-STOCKED, CENTRALLY PROCURED ON DEMAND	F	I/AFLOAT	F	I/AFLOAT
	G	ITEM: STOCKED FOR SUSTAINED SUPPORT, UNECONOMICAL TO PRODUCE AT A LATER TIME				
	H	ITEM: STOCKED, CONTAINS HAZMAT, HMIS/MSDS REPORTING REQUIRED				
	R	TERMINAL OR OBSOLETE, REPLACED			G	I/ASHORE AND AFLOAT
	Z	TERMINAL OR OBSOLETE, NOT REPLACED	G	I/ASHORE AND AFLOAT		
K	D	ITEM: DEPOT O/H & MAINTENANCE KITS				
	F	ITEM: MAINTENANCE KIT, PLACE AT O, F, H, L			H	I/ASHORE
	B	ITEM: IN BOTH DEPOT REPAIR & MAINT. KITS				
M	O	MFR OR FAB AT UNIT LEVEL	H	I/ASHORE		
	F	MFR OR FAB AT INTERMEDIATE/DS LEVEL			K	CONTRACTOR FACILITY
	H	MFR OR FAB AT INTERMEDIATE/GS LEVEL				
	L	MFR OR FAB AT SPECIALIZED REPAIR ACTIVITY (SRA)				
	G	MFR OR FAB AT INTERMEDIATE BOTH AFLOAT AND ASHORE	K	CONTRACTOR FACILITY	L	INTERMEDIATE SRA
	D	MFR OR FAB AT DEPOT MAINTENANCE LEVEL				
A	O	ITEM: ASSEMBLED AT ORG/UNIT				
	F	ITEM: ASSEMBLED AT INTERMEDIATE LEVEL - AFLOAT			D	DEPOT
	H	ITEM: ASSEMBLED AT INTERMEDIATE LEVEL - ASHORE	L	INTERMEDIATE SRA		
	L	ITEM: ASSEMBLED AT SRA				
	G	ITEM: ASSEMBLED AT INTERMEDIATE BOTH AFLOAT AND ASHORE			Z	NON-REPAIRABLE
	D	ITEM: ASSEMBLED AT DEPOT MAINTENANCE LEVEL				
X	A	ITEM: REQUISITION NEXT HIGHER ASSEMBLY	D	DEPOT		
	B	ITEM: NOT PROCURED OR STOCKED, AVAILABLE THRU SALVAGE, REQ. BY CAGE/PART NUMBER			B	RECONDITION
	C	INSTALLATION DRAWING, DIAGRAM, INSTRUCTION SHEET, IDENTIFY BY CAGE/PART NUMBER	Z	REF ONLY		
	D	NON-STOCKED. OBTAIN VIA LOCAL PURCHASE				

RECOVERABILITY		SERVICE OPTION	
5TH POSITION		6TH POSITION	
DISPOSITION: WHEN UNSERVICEABLE OR UNECONOMICALLY REPAIRABLE, CONDEMN OR DISPOSE.		ASSIGNED TO SUPPORT ITEMS TO CONVEY SPECIFIC INFORMATION TO THE SERVICE'S LOGISTICS COMMUNITY/OPERATING FORCES.	
O	ORG/UNIT	1	I-LEVEL 1ST DEGREE
F	I/AFLOAT	2	I-LEVEL 2ND DEGREE
G	I/ASHORE AND AFLOAT	3	I-LEVEL 3RD DEGREE
H	I/ASHORE	6	COMMERCIAL ITEM, ORGANICALLY MFR'D
K	DLR; CONTRACTOR FACILITY	8	NON-CONSUMABLE; 2ND DEGREE ENGINE I-LEVEL
L	INTERMEDIATE SRA LEVEL	9	NON-CONSUMABLE; 3RD DEGREE ENGINE I-LEVEL
D	DLR; CONDEMN OR DISPOSE AT DEPOT	E	END TO END TEST
		J	INTER-SERVICE DLR REPAIRABLE BELOW D-LEVEL
Z	NON-REPAIRABLE	P	PROGRESSIVE MAINTENANCE
		R	GOLD DISC REPAIR
A	NON-REPAIRABLE BUT REQUIRES SPECIAL HANDLING	T	TRAINING DEVICES

THIS PAGE INTENTIONALLY LEFT BLANK.

CHAPTER 3

GENERAL PURPOSE FLIGHT CLOTHING

Section 3-1. Description

3-1. GENERAL.

NOTE

Squadron and related patches and rank insignia are authorized to be worn on flight clothing as directed by the local command providing the total surface area of all patches (name tag excluded) does not exceed 50 in.^{2} and that no one patch dimension exceeds 4 inches in any given direction.

NAVAIR conducts a State of the Art Survival Equipment Program sponsored by COMNAVAIRSYSCOM (PMA-202) and OPNAV N780G4. The purpose of this program is to improve Life Support, Survival Equipment and Personal Protective Apparel provided to Navy and Marine Corps Aircrew. The program includes development of new technology, Non-Developmental Items (NDI) and commercial off-the-shelf (COTS) items and equipment. The State of the Art Program will release an Annual State of the Art Survival Item (SOASI) Message which identifies, authorizes, and provides procurement sources for survival equipment and clothing for aircrew and passenger use. Refer to PMA-202 website for more information at https:\\pma202.navair.navy.mil.

NDI and COTS items procured under authority of the Annual State of the Art Message shall be maintained and cared for in accordance with manufacturer's instructions.

NDI items procured under authority of cold weather protective clothing messages shall be maintained and cared for in accordance with manufacturer's instructions.

3-2. The flight clothing covered in this chapter are designated to be worn by aircrewmembers as outer garments during flight operations in aircraft as designated in the NAVAIR 13-1-6.7-1 Manual.

3-3. CONFIGURATION.

3-4. Configuration of individual articles of flight clothing is presented in the Section pertaining to that garment and/or the NAVAIR 13-1-6.7-1 Aircrew Personal Protective Equipment Manual.

Section 3-2. Flyer's Summer Coverall, Fire Resistant

3-5. GENERAL.

3-6. Four types of Flyer's Summer Coveralls presently authorized for use are CWU-27/P (Sage Green or Khaki), CWU-73/P, Enhanced Air Force Flight Suit (EAFFS), and Modified Enhanced Air Force Flight Suit (MEAFFS) (see Figure 3-1). These coveralls are designed to be worn as an outer garment in warm temperature zones and to provide protection in the event wearer is exposed to hazard of fire.

3-7. CONFIGURATION.

3-8. The coveralls are one-piece, unlined garments fabricated from aramid cloth, which is a high temperature-resistant, and inherently flame-retardant synthetic fabric which has no hot-melt point or drip characteristics. The lightweight fabric will not support combustion but will begin to char at 700° to 800°F. The fabric has abrasion resistance similar to nylon, and like nylon, aramid is nonabsorbent. Because of this characteristic, for optimum comfort, cotton underwear should be worn under the coveralls.

3-9. Coveralls are supplied in sizes 32 Short to 52 Long. Sizes and dimensions are listed in Table 3-1.

3-10. See Table 3-2 for configurations of authorized summer coveralls and their availability within the Federal Stock System.

3-11. APPLICATION.

3-12. The Flyer's Summer Coveralls are designated for use by all pilots and other authorized aircrewmembers.

3-13. FITTING.

WARNING

Sleeves of the coveralls shall always be worn closed at the wrist to ensure maximum fire protection. Front slide fastener shall be completely closed and the back collar shall be worn upright and tucked into the helmet to avoid skin exposure in a fire.

Tight fitting coveralls decrease flame protection by eliminating the needed air pocket between wearer and fabric.

3-14. The summer flyer's coverall is loosely fitted to the aircrewmember. Sizes and garment dimensions are listed in Table 3-1. The coverall is used with standard Navy personal equipment and is worn under the anti-g garment. The coverall sleeves shall always be worn down and closed at the wrist to ensure maximum fire protection.

3-15. The Type II CWU-27/P Class 1 (Sage Green) and Class 2 (Khaki) Women Flyers' Summer Coverall has a slightly extended front zipper required for use of personal relief systems, and is available in even sizes 30-44 misses (M) and women's (W), lengths short, regular and long. Short lengths are intended for wearers with heights less than 64 inches. Regular lengths are intended for wearers with heights of 64 to 68 inches. Long lengths are intended for wearers with heights of greater than 68 inches. See Table 3-3 for sizing.

3-16. MODIFICATIONS.

NOTE

The left sleeve pencil pockets on the Flyer's Summer Coveralls may be moved to the right sleeve at the discretion of the aircrewman. This change provides easier access to the pocket for left-handed aircrewmen.

Replacement of lower leg pocket slide fastener closure with hook and pile tape, or removal of lower leg pockets of the Flyer's Summer Coveralls by Fleet maintenance personnel is at the discretion of the aircrewman. To remove pocket, carefully remove stitching of pocket from coverall so that integrity of coverall will not be compromised. An optional knife pocket (NIIN 01-318-0468) can be installed on left thigh area.

3-17. All Modified Enhanced Air Force Flight Suits (MEAFFS) shall have requirements of ACB 834 incorporated. See paragraphs 3-32 and 3-36. Repairs, fabrications, and installations to maintain serviceability are listed in Table 3-4. All Enhanced Air Force Flight Suits (EAFFS) shall have the lower right leg pocket flap removed and be sewn closed in accordance with paragraph 3-36.

CWU-27/P Flyer's Summer Coverall, Fire Resistant

CWU-73/P Flyer's Summer Coverall, Fire Resistant, Blue

Enhanced Air Force Flight Suit (EAFFS)

Modified Enhanced Air Force Flight Suit (MEAFFS)

Figure 3-1. Flyer's Summer Coveralls (Sheet 1 of 2)

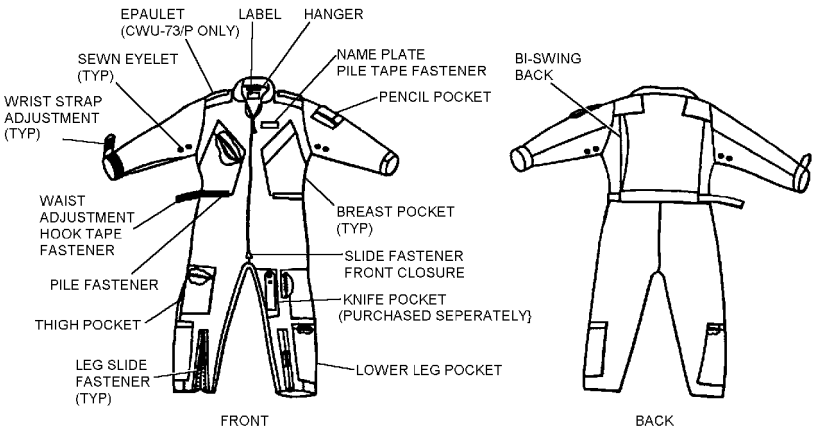

CWU-27/P and CWU-73/P Flyer's Summer Coverall, Fire Resistant

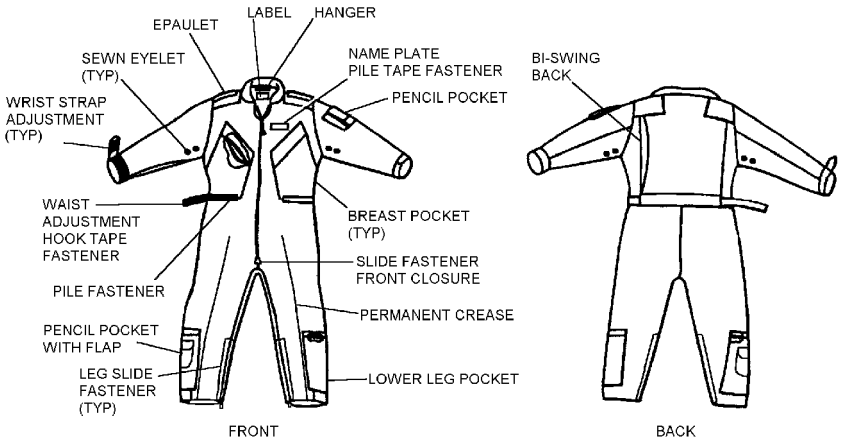

Enhanced Air Force Flight Suit (EAFFS)

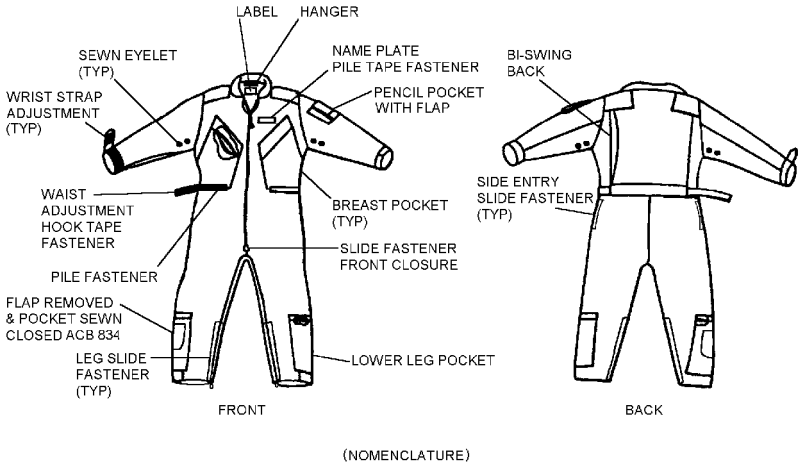

Modified Enhanced Air Force Flight Suit (MEAFFS)

3-2

Figure 3-1. Flyer's Summer Coveralls (Sheet 2 of 2)

Table 3-1. Flyer's Summer Coverall Sizes and Dimensions

Size	Chest Circumference	Hip Circumference	Leg Inseam	Sage Green NIIN	Khaki NIIN
32 S	36 3/4	38	28	01-043-8376	01-452-4668
34 S	38 3/4	40 1/4	28 1/8	01-043-8378	01-452-4758
36 S	40 3/4	42 1/2	28 1/4	01-043-8380	01-452-4774
38 S	42 3/4	44 1/2	28 3/8	01-043-8383	01-452-5296
40 S	44 3/4	46 1/2	28 1/2	01-043-8386	01-452-4865
42 S	46 3/4	48 1/2	28 5/8	01-043-8389	01-452-4943
44 S	48 3/4	50 1/2	28 3/4	01-043-8391	01-452-4970
46 S	50 3/4	52 1/2	28 7/8	01-043-8394	01-452-5040
32 R	36 3/4	38	30	01-043-8377	01-452-4686
34 R	38 3/4	40 1/4	30 1/8	01-043-8379	01-452-4767
36 R	40 3/4	42 1/2	30 1/4	01-043-8381	01-452-4783
38 R	42 3/4	44 1/2	30 3/8	01-043-8384	01-452-5307
40 R	44 3/4	46 1/2	30 1/2	01-043-8387	01-452-4877
42 R	46 3/4	48 3/4	30 5/8	01-043-9529	01-452-4960
44 R	48 3/4	50 3/4	30 3/4	01-043-8392	01-452-5031
46 R	50 3/4	52 3/4	30 7/8	01-043-8395	01-452-4797
48 R	52 3/4	55	31	01-043-8397	01-452-4956
50 R	54 3/4	57	31 1/8	01-437-0744	01-452-5060
52 R	56 3/4	59 1/4	31 1/4	01-437-0741	01-452-5072
36 L	40 3/4	42 1/2	32 1/4	01-043-8382	01-452-4793
38 L	42 3/4	44 1/2	32 3/8	01-043-8385	01-452-5319
40 L	44 3/4	46 1/2	32 1/2	01-043-8388	01-452-4888
42 L	46 3/4	48 3/4	32 5/8	01-043-8390	01-452-4967
44 L	48 3/4	50 3/4	32 3/4	01-043-8393	01-452-5036
46 L	50 3/4	52 3/4	32 7/8	01-043-8396	01-452-4940
48 L	52 3/4	55	33	01-043-8398	01-452-5038
50 L	54 3/4	57	33 1/8	01-437-0743	01-452-5065
52 L	56 3/4	59 1/4	33 1/4	01-437-3941	01-452-5078

Note: 1. All dimensions are given in inches.

Table 3-2. Flyer's Summer Coverall Configurations

Configuration	CWU-27/P	CWU-73/P	EAFFS	MEAFFS
Pockets:				
Left Thigh	X	X		
Right Thigh	X	X		
Lower Left Leg	X	X	X	X
Lower Right Leg	X	X	X	X
Pencil Pocket Flap Lower Right Leg (Note 4)			X	X
Left Thigh Knife Pocket	X	X		
Left Breast	X	X	X	X
Right Breast	X	X	X	X
Left Sleeve Storage	X	X	X	X
Left Sleeve Pencil	X	X	X	X
Slide Fasteners:				
Side Pass Through				X
Front Lower Leg	X	X		
Inseam Lower Leg			X	X
Breast/Thigh/Leg and Left Sleeve Cargo Pocket	X	X	X	X
Epaulets		X	X	
Permanent Front Leg Crease			X	

Notes:
1. CWU-27/P and CWU-73/P differ only in color (CWU-27/P is sage green or khaki and CWU-73/P is blue) and epaulets on CWU-73/P.
2. MEAFFS and CWU-73/P coveralls are no longer carried in the Federal Stock System.
3. The following NIIN Series listed for Flyer's Summer Coveralls are provided for identification purposes only:

CWU-27/P	01-043-8376 thru 8398 and 01-437-0741 thru 0744 and 3941 Sage Green
	01-452-4668 thru 5078 khaki
EAFFS	01-291-1227 thru 1248
MEAFFS	01-351-0316 thru 0339

4. Remove all lower right leg pencil pocket flaps prior to issue in accordance with paragraph 3-36.

Table 3-3. Women Flyer's Summer Coverall CWU-27P, Type II, Class 1 Sizes and Dimensions

Size	Chest Circumference	Hip Circumference	NIIN	
			Sage Green	Khaki
30MS	30 - 32	32 to 34	01-468-6762	01-483-1185
30MR	30 - 32	32 - 34	01-468-6767	01-483-1187
30ML	30 - 32	32 - 34	01-468-6775	01-483-1188
32MS	32 - 34	34 - 36 1/2	01-468-6779	01-483-1189
32MR	32 - 34	34 - 36 1/2	01-468-6782	01-483-1191
32ML	32 - 34	34 - 36 1/2	01-468-6785	01-483-1192
34MS	34 - 36	36 1/2 - 38 1/2	01-468-6786	01-483-1193
34MR	34 - 36	36 1/2 - 38 1/2	01-468-6787	01-483-1195
34ML	34 - 36	36 1/2 - 38 1/2	01-468-6789	01-483-1197
36MS	36 - 38	38 1/2 - 40 1/2	01-468-6790	01-483-1198
36MR	36 - 38	38 1/2 - 40 1/2	01-468-6792	01-483-1211
36ML	36 - 38	38 1/2 - 40 1/2	01-468-6794	01-483-1218
38MS	38 - 40	40 1/2 - 42 1/2	01-468-6796	01-483-1220
38MR	38 - 40	40 1/2 - 42 1/2	01-468-6797	01-483-1224
38ML	38 - 40	40 1/2 - 42 1/2	01-468-6799	01-483-1225
40MS	40 - 42	42 1/2 - 44 1/2	01-468-6801	01-483-1243
40MR	40 - 42	42 1/2 - 44 1/2	01-468-6966	01-483-1245
40ML	40 - 42	42 1/2 - 44 1/2	01-468-6970	01-483-1247
42MS	42 - 44	44 1/2 - 46 1/2	01-468-6972	01-483-1255
42MR	42 - 44	44 1/2 - 46 1/2	01-468-6974	01-483-1257
42ML	42 - 44	44 1/2 - 46 1/2	01-468-6975	01-483-1258
44MS	44 - 46	46 1/2 - 48 1/2	01-468-6976	01-483-1259
44MR	44 - 46	46 1/2 - 48 1/2	01-468-6979	01-483-1260
44ML	44 - 46	46 1/2 - 48 1/2	01-468-6977	01-483-1261
30WS	30 - 32	34 - 36	01-468-6978	01-483-0877
30WR	30 - 32	34 - 36	01-468-6980	01-483-0881
30WL	30 - 32	34 - 36	01-468-6982	01-483-0882
32WS	32 - 34	36 1/2 - 38	01-468-6984	01-483-0884
32WR	32 - 34	36 1/2 - 38	01-468-6985	01-483-0885
32WL	32 - 34	36 1/2 - 38	01-468-6988	01-483-0886
34WS	34 - 36	38 1/2 - 40	01-468-6987	01-483-0887
34WR	34 - 36	38 1/2 - 40	01-468-6995	01-483-0888
34WL	34 - 36	38 1/2 - 40	01-468-6849	01-483-0889
36WS	36 - 38	40 1/2 - 42	01-468-7058	01-483-0890
36WR	36 - 38	40 1/2 - 42	01-468-7059	01-483-0892
36WL	36 - 38	40 1/2 - 42	01-468-7060	01-483-0893
38WS	38 - 40	42 1/2 - 44	01-468-7063	01-483-0894

Table 3-3. Women Flyer's Summer Coverall CWU-27P, Type II, Class 1 Sizes and Dimensions (Cont)

Size	Chest Circumference	Hip Circumference	NIIN	
			Sage Green	Khaki
38WR	38 - 40	42 1/2 - 44	01-468-7064	01-483-0895
38WL	38 - 40	42 1/2 - 44	01-468-7067	01-483-0896
40WS	40 - 42	44 1/2 - 46	01-468-7069	01-483-0898
40WR	40 - 42	44 1/2 - 46	01-468-7072	01-483-0899
40WL	40 - 42	44 1/2 - 46	01-468-7074	01-483-0901
42WS	42 - 44	46 1/2 - 48	01-468-7075	01-483-0902
42WR	42 - 44	46 1/2 - 48	01-468-7078	01-483-0904
42WL	42 - 44	46 1/2 - 48	01-468-7081	01-483-0905
44WS	44 - 46	48 1/2 - 50	01-468-7083	01-483-0907
44WR	44 - 46	48 1/2 - 50	01-468-7088	01-483-0908
44WL	44 - 46	48 1/2 - 50	01-468-7090	01-483-0909

Note: 1. All dimensions are given in inches.

3-18. EZ-P ZIPPER MODIFICATION. CWU-27/P modified with the horizontal relief zipper in lieu of the standard CWU-27/P configuration. The modification is one continuous zipper added at the waist below the waist adjustment tabs. The zipper starts at the right front waist area, right of the vertical zipper, extending to the left front waist area left of the vertical zipper. An internal section of fabric extends the length of the horizontal zipper to protect the skin from the zipper. An external flap of fabric extends the length of the horizontal zipper to conceal the zipper and provides snag resistance. The modified CWU-27/P is approved for wear in H-60F, MH-60S, MH-60R and H-53 aircraft. Limits: The horizontal zipper modification is not authorized for use in ejection seat equipped aircraft. (Figure 3-2).

3-19. THE EZ-P MODIFICATION FOR THE FLIGHT SUITS ARE STILL IN FLIGHT TESTING AND WILL NOT BE AVAILABLE FOR FLEET WIDE USE UNTIL FALL OF 2007 OR LATER. A NAVAL MESSAGE AND FLEET WIDE CLEARANCE WILL INFORM THE FLEET WHEN EZ-P MODIFICATION IS AUTHORIZED FOR FLEET WIDE USE. UNTIL THEN IT IS NOT AUTHORIZED TO MODIFY THE FLIGHT SUITS WITH THE EZ-P ZIPPER.

3-20. MAINTENANCE.

3-21. The aircrewmember is responsible for pre/postflight inspection and cleaning. Repairs or other maintenance actions required shall be performed by organizational level or above. All maintenance actions, inspections and repairs shall be recorded in accordance with COMNAVAIRFORINST 4790.2.

3-22. INSPECTION.

3-23. The Coverall shall be subjected to a Place-In-Service Inspection, a Preflight/Postflight Inspection, and a 360-Day Special Inspection.

3-24. PLACE-IN-SERVICE INSPECTION. The Coverall shall be inspected prior to Place-In-Service. To conduct the Place-In-Service Inspection proceed as follows:

1. Fit assembly to aircrewmember using fitting procedures outlined in paragraph 3-13.

2. Perform visual inspection in accordance with paragraph 3-26.

3. Annotate aircrewmember's identification BUNO on the tag of the coverall being careful not to cover identifying data for the coverall (such as NIIN).

4. Document Place-In-Service Inspection in accordance with COMNAVAIRFORINST 4790.2.

Table 3-4. Repairs/Installations/Fabrications

Description of Repair/ Installation/Fabrication	Application	Paragraph
Fabrication and Installation of a Pencil Pocket Protective Flap	All Flyer's Summer Coveralls and CWU-36/P and CWU-45/P Flyer's Jackets received from supply without a pencil pocket flap	3-31
Replacement of Loose or Broken Stitching	Flyer's Summer Coveralls and CWU-36/P, CWU-45/P Flyer's Jackets	Note 1
Repair of Small Holes or Tears	All Flyer's Summer Coveralls and CWU-36/P, CWU-45/P Flyer's Jackets	Note 1
Pencil Pocket Protective Flap Closure	Flyer's Summer Coveralls (MEAFFS)	3-32
Replacement of Hook and Pile Fastener Tapes	All Flyer's Summer Coveralls and CWU-36/P, CWU-45/P Flyer's Jackets	3-33
Replacement of Center Front Slide Fasteners	Flyer's Summer Coveralls	3-34
Replacement of Slide Fastener on Lower Leg Pocket	Flyer's Summer Coveralls (Optional)	3-35
Lower Leg Pencil Pocket Closure	Flyer's Summer Coveralls (MEAFFS and EAFFS)	3-36
Optional Leg Closure Hook and Pile Fastener Tape	All CWU-27/P Flyers Coveralls	3-37
Replacement of Snap Fasteners	Flyer's Summer Coveralls	Note 2
Replacement of Cuffs	All CWU-36/P and CWU-45/P Flyer's Jackets	3-138
Replacement of Waistband	All CWU-36/P and CWU-45/P Flyer's Jackets	3-139

Notes:
1. Broken or loose stitching shall be repaired by restitching using the same type stitch and stitches per inch as the original stitching. It is recommended that thread conforming to MIL-T-83193, Sage Green, (NIIN 00-130-6245 or 00-405-2252) be used for repairs. If patching is necessary, it is preferable to use aramid cloth conforming to MIL-C-83429, Sage Green (NIIN 01-147-2064). Patches can be cut from discarded coveralls/jackets.
2. Defective or missing snap fasteners may be replaced as necessary. Recommend snap fasteners conforming to MIL-F-10884, Style 2, finish 2, P/N MS27980-1B, -6B, -7B, and -8B be used.

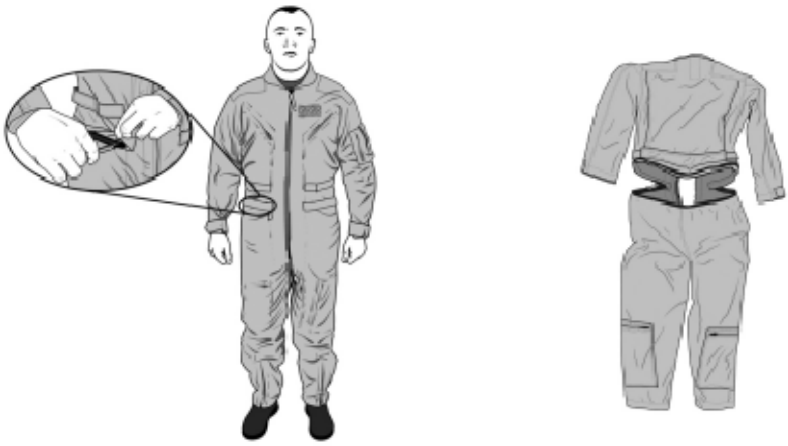

Figure 3-2. Zipper Modification

3-25. PREFLIGHT/POSTFLIGHT INSPECTION. The aircrewmember is responsible for Preflight/Postflight Inspection. Preflight/Postflight Inspection consists of a visual inspection for condition of the coverall. Inspect in accordance with paragraph 3-26.

3-26. 360-DAY SPECIAL INSPECTION. The Special Inspection shall be performed by organizational level or above upon issue prior to placing in service, and every 360 days thereafter. To conduct the 360-Day Special Inspection proceed as follows:

WARNING

Worn/thin fabric can cause coverall to have reduced flame resistance and endanger the aircrewmember in an emergency situation. Garments in this condition shall be considered non-RFI.

1. Inspect fabric for cuts, tears and abrasions.

2. Inspect stitching for holes and tears.

3. Inspect snap and hook and pile fasteners for secure attachment and closure.

4. Inspect slide fasteners for damage, security, and ease of operation. Inspect thong pull-tabs for presence and security of attachment.

5. Inspect coverall to insure that it is a Navy authorized coverall with proper identification, e.g. NIIN, Contract Number, Part Number etc. Garments that have been open purchased from commercial establishments may not have the proper flame resistance and are not authorized.

6. Verify condition of coverall.

7. Record all maintenance actions and inspections in accordance with COMNAVAIRFORINST 4790.2.

3-27. CLEANING. It is recommended that a new coverall be laundered prior to use in order to soften the fabric and eliminate any possible skin irritation that might occur due to original fabric harshness. After tumble drying or during drip drying, the coverall should be hung on a wooden hanger. The fabric is a drip-dry type, requiring no special handling and may be washed as frequently as needed. The coverall may be laundered at home or in commercial washers and dryers on DELICATE cycle.

3-28. Do not dry clean. Do not use fabric softener, bleach, starch, or soap. Use only detergents when laundering. Coveralls may be laundered as often as necessary. Flame resistance does not deteriorate with normal laundering as flame resistance is an inherent aramid fabric property.

3-29. REPAIRS AND FABRICATIONS.

3-30. Repairs and fabrications shall be performed by the lowest maintenance level possible. Repairs other than those listed in Table 3-4 may be performed at the discretion of the repairing maintenance facility.

3-31. FABRICATION AND INSTALLATION OF A PENCIL POCKET PROTECTIVE FLAP (MEAFFS AND CWU-64/P COVERALLS AND CWU-36/P AND CWU-45/P FLYER'S JACKETS). To fabricate and install a pencil pocket protective flap, proceed as follows:

NOTE

Relocation of pencil pocket from upper front left sleeve to upper front right sleeve at discretion of aircrewman is authorized.

Materials Required

Quantity	Description	Reference Number
1 piece 4 in. x 11 in. per flap	Cloth, Plain and Basket Weave, Aramid, Type II, Class 1, Sage Green (For CWU-27/P only)	MIL-C-83429 NIIN 01-147-2064 (Note 1)
1 piece 4 in. x 11 in. per flap	Cloth, Twill, Aramid, High Temp Resistant (For CWU-36/P, CWU-45/P, and CWU-64/P)	MIL-C-81814 NIIN 01-031-9403
As Required	Fastener Tape, Pile, 1-Inch Width, Olive Green, Sage Green, or Tan	MIL-F-21840 NIIN 00-405-2263 NIIN 01-398-8886
4 inches per flap	Fastener Tape, Hook, 1-Inch Width, Olive Green, Sage Green, or Tan	MIL-F-21840 NIIN 00-405-2266 NIIN 01-398-6619

Materials Required (Cont)

Quantity	Description	Reference Number
As Required	Thread, Nylon, High Temperature Resistant, Sage Green	MIL-T-83193 NIIN 00-130-6245
	-or-	
	Thread, Nylon, Type II, Size E, Sage Green	V-T-295 NIIN 00-204-3884

Notes: 1. NIIN 01-147-2064 has been discontinued without replacement in the supply system. NAVAIR Clothing Team has plentiful supply on hand and can distribute in 5 yard increments to any fleet activities who need it. Please contact member of the Personal Protective Clothing Team to request material. Team Members are listed on the PMA202 website.

NOTE

Dimensions may be altered to accommodate varying size pockets.

If material is not readily available, it is recommended that unserviceable suits be cut up and used for the manufacture of the flap.

1. Cut one 11 x 4 inch piece of cloth for pocket flap.

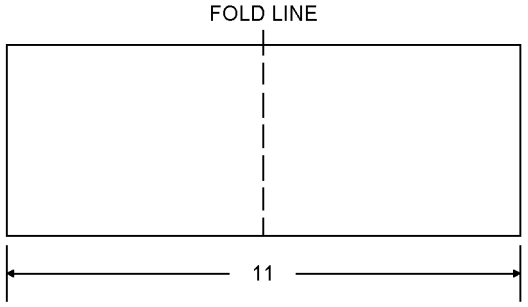

3p23s1

Step 1 - Para 3-31

2. Fold and stitch flap.

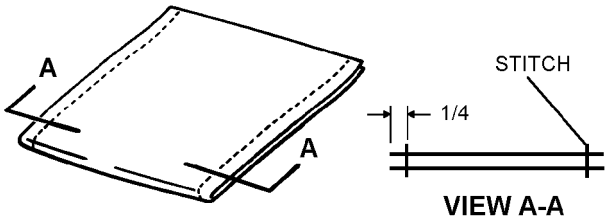

3p23s2

Step 2 - Para 3-31

3. Turn flap inside out and top stitch.

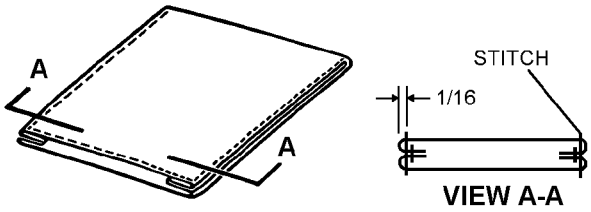

3p23s3

Step 3 - Para 3-31

4. Attach a 1 x 4 inch long piece of hook tape to flap.

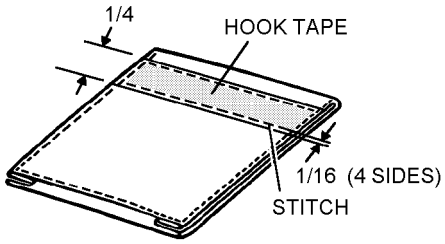

3p23s4

Step 4 - Para 3-31

5. Remove stitching from existing pocket on flight suit.

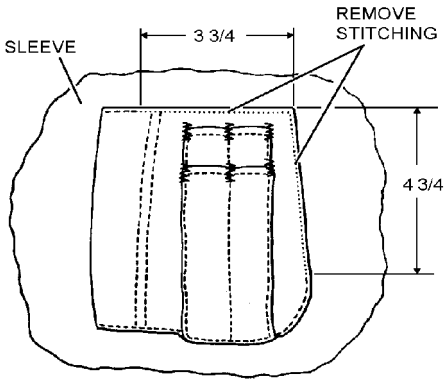

3p23s5

Step 5 - Para 3-31

NOTE

Insert pencils into their respective compartments to obtain the proper slack in the pile tape while measuring, then remove.

Confine sewing operation to pocket only and not the sleeve.

6. Attach pile tape to both sides of the pencil compartments with a 3/8 X 7/8-inch boxstitch. Then, sew a single row of stitching between the pencil compartments, securing the pile tape between the compartments.

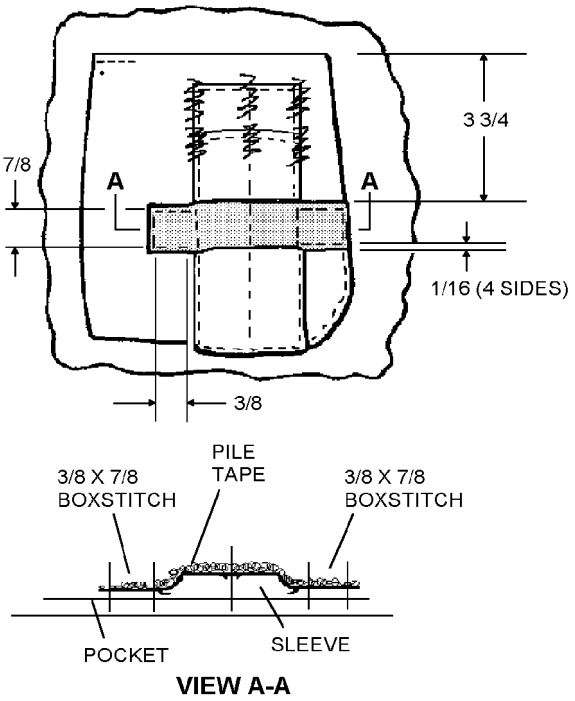

3p23s6

Step 6 - Para 3-31

7. Locate pocket flap under pocket and restitch in original position.

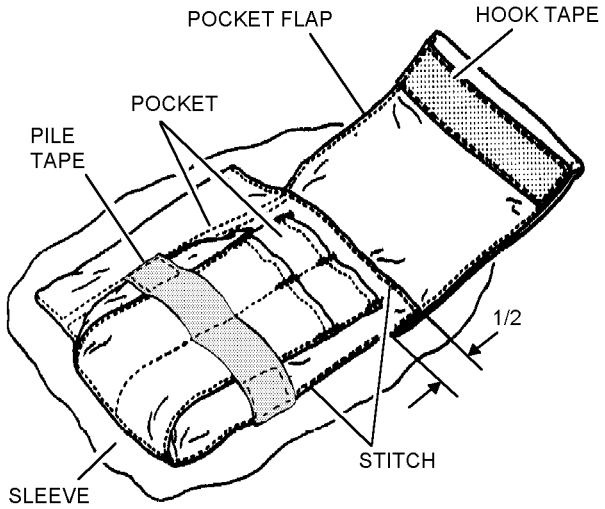

3p23s7

Step 7 - Para 3-31

3-32. PENCIL POCKET PROTECTIVE FLAP CLOSURE. Ensure proper closure of pen/pencil pocket protective flap on upper left sleeve of MEAFFS Flyer's Summer Coveralls in accordance with ACB 834 as follows:

1. Insert pen/pencils into pocket channels.

2. Close protective flap and secure hook and pile tape.

3. Check for excess fabric between top of hook and pile closure attachment and seam sewn at top of protective flap.

4. There should be no more than 1/8-inch clearance between highest point of pen/pencil and fabric of flap when flap is closed and hook and pile is secured.

5. If fabric is in excess of 1/8-inch, carefully remove attaching stitching from hook tape and remove from flap. Do not discard hook tape.

6. With pen/pencils still installed in pocket channels, lay flap flat against pocket.

7. Fold end of flap under until edge of fold extends approximately 1/4 inch beyond edge of pile tape attached to pocket.

NOTE

If fold made in step 7 is 3/4 inch or less, do not make fold. Go to step 9.

All stitching shall be in accordance with ASTM-D-6193, Type 301 lockstitch, 7 to 10 stitches per inch with minimum 1/2-inch backstitch.

8. Sew single row stitching around folded end of flap 1/8 inch from edge.

9. With pen/pencils still in pocket, place flap in closed position over pile tape on pocket and mark flap where hook and pile tapes will mate. Ensure there is no more than 1/8-inch clearance between top of pen/pencils and fabric of flap. Remove pen/pencils from pocket channels.

10. Sew hook tape removed in step 5 to inside of flap in position marked in step 9. Use single row stitch 1/8 inch from edge of hook tape.

11. Verify pocket closure and document in accordance with COMNAVAIRFORINST 4790.2.

3-33. REPLACEMENT OF HOOK AND PILE FASTENER TAPES. To replace hook and pile fastener tapes, proceed as follows:

Materials Required
(For Flyer's Summer Coveralls, CWU-36/P and CWU-45/P)

Quantity	Description	Reference Number
As Required	Fastener Tape, Hook, Type I, Class I, Sage Green	MIL-F-21840
	1-Inch Width	NIIN 00-405-2266
	1 1/2-Inch Width	NIIN 00-425-1294
	or Tan	
	1-Inch Width	NIIN 01-398-6619
	1 1/2-Inch Width	NIIN 01-398-4638
As Required	Fastener Tape, Pile, Class I, Sage Green	MIL-F-21840
	1-Inch Width	NIIN 00-405-2263
	1 1/2-Inch Width	NIIN 00-405-2264
	or Tan	
	1-Inch Width	NIIN 01-398-8886
	1 1/2-Inch Width	NIIN 01-398-5475
As Required	Thread, Nylon, High Temperature Resistant, Sage Green	MIL-T-83193 NIIN 00-130-6245
	-or-	
	Thread, Nylon, Type II, Size E, Sage Green	V-T-295 NIIN 00-204-3884

1. Carefully remove damaged fastener tape by removing attachment stitching.

2. Cut new fastener tape the same length as the original fastener tape. Sear ends of tape.

3. Place fastener tape on coverall in position of original fastener tape. Stitch to coverall using a single row of stitching, 1/8-inch from fastener tape edge on all four sides.

4. Verify fastener tape replacement and document in accordance with COMNAVAIRFORINST 4790.2.

3-34. REPLACEMENT OF CENTER FRONT SLIDE FASTENER. The center front slide fasteners may be replaced at the discretion of the repairing activity. The following procedure is recommended.

Materials Required

Quantity	Description	Reference Number
As Required	Thread, Nylon, High Temperature Resistant, Sage Green	MIL-T-83193 NIIN 00-130-6245
	-or-	
	Thread, Nylon, Type II, Size E, Sage Green	V-T-295 NIIN 00-204-3884
6 Inches X 1 1/2 Inches	Cloth, Plain and Basket Weave, Aramid	MIL-C-83429 NIIN 01-147-2064 (Note 1)
1	Fastener, Slide, Interlocking, Type I, Style 15, Size MS, Sage Green	A-A-55634 (Refer to Table 3-5)

Notes: 1. NIIN 01-147-2064 has been discontinued without replacement in the supply system. NAVAIR Clothing Team has plentiful supply on hand and can distribute in 5 yard increments to any fleet activities who need it. Please contact member of the Personal Protective Clothing Team to request material. Team Members are listed on the PMA202 website.

1. If correct length slide fastener is not available, construct a slide fastener the same length as the original slide fastener.

NOTE

All stitching shall be in accordance with ASTM-D-6193, Type 301 lockstitch, 7 to 10 stitches per inch with minimum 1/2-inch backstitch.

Table 3-5. Slide Fasteners, A-A-55634, for Repair of Flyer's Coveralls

Size	Location	Type	Style	Size	Length (Inches)	NIIN
32S	Front Opening	1	15	MS	25	01-069-8247
32R	Front Opening	1	15	MS	26	00-478-0713
34S	Front Opening	1	15	MS	25 1/2	01-069-8248
34R	Front Opening	1	15	MS	26 1/2	00-478-0714
36S	Front Opening	1	15	MS	26	00-478-0713
36R	Front Opening	1	15	MS	27	00-478-0715
36L	Front Opening	1	15	MS	28	00-495-3368
38S	Front Opening	1	15	MS	26 1/2	00-478-0714
38R	Front Opening	1	15	MS	27 1/2	01-049-0720
38L	Front Opening	1	15	MS	28 1/2	00-476-7622
40S	Front Opening	1	15	MS	27	00-478-0715
40R	Front Opening	1	15	MS	28	00-495-3368
40L	Front Opening	1	15	MS	29	00-476-7623
42S	Front Opening	1	15	MS	27 1/2	01-049-0720
42R	Front Opening	1	15	MS	28 1/2	00-476-7622
42L	Front Opening	1	15	MS	29 1/2	00-476-7624
44S	Front Opening	1	15	MS	28	00-495-3368
44R	Front Opening	1	15	MS	29	00-476-7623
44L	Front Opening	1	15	MS	30	00-478-0716
46S	Front Opening	1	15	MS	28 1/2	00-476-7622
46R	Front Opening	1	15	MS	29 1/2	00-476-7624
46L	Front Opening	1	15	MS	30 1/2	00-476-7625
48R	Front Opening	1	15	MS	30	00-478-0716
48L	Front Opening	1	15	MS	31	01-049-0721
50R	Front Opening	1	15	MS	30 1/2	00-476-7625
50L	Front Opening	1	15	MS	31 1/2	—
52R	Front Opening	1	15	MS	31	01-049-0721
52L	Front Opening	1	15	MS	32	—

2. Remove all stitching attaching slide fastener to front and protective fly. Cut tape close to collar edge, being careful not to cut material.

3. Stitch cover piece to fronts along beaded edges, stitching along existing stitching.

4. Fold top end of slide fastener tape forward 1/4 inch; stitch.

NOTE

The slide fastener scoops and protective fly shall start 1/2 inch (plus or minus 1/4 inch) from the collar seam and extend to within 1 1/4 inches of the crotch.

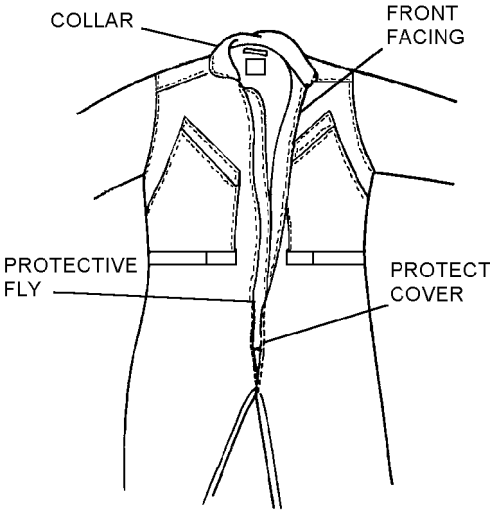

Steps 2 and 3 - Para 3-34

3p26s2

5. Position the right slide fastener with the raw edges even. Join with a single row of stitching 1/4 inch from the edge of the scoops, with the front beaded edge covering the scoops.

6. Fold the facing over the stitching, and place a second row of stitching 1/16 inch from the folded edge of the facing, sewing through all thicknesses.

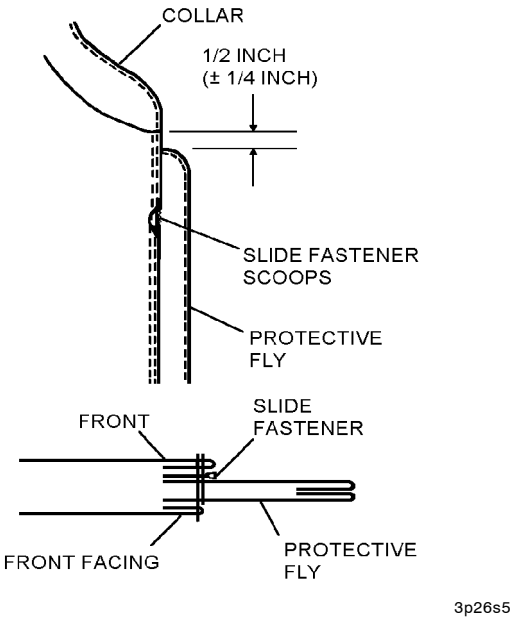

Steps 5 and 6 - Para 3-34

7. Position and join the left slide fastener tape the same as specified for the slide fastener tape, except that there is no protective fly.

8. Make 1/2-inch wide bartacks through all thicknesses, first bartack 1/4 inch below bottom stop of slide fastener, and second bartack 1 inch below first bartack.

9. To fabricate thong, fold a 6-inch X 1 1/2-inch strip of fabric in half lengthwise. Fold raw edges to inside, 1/4 inch. Stitch 1/16 inch from both folded edges.

10. Pull the thong through the hole in the top slider, with the raw edges even.

11. Fold raw edges to inside, 1/4 inch. Bartack at the bottom, the center, and next to the slider, across the 1/2-inch width.

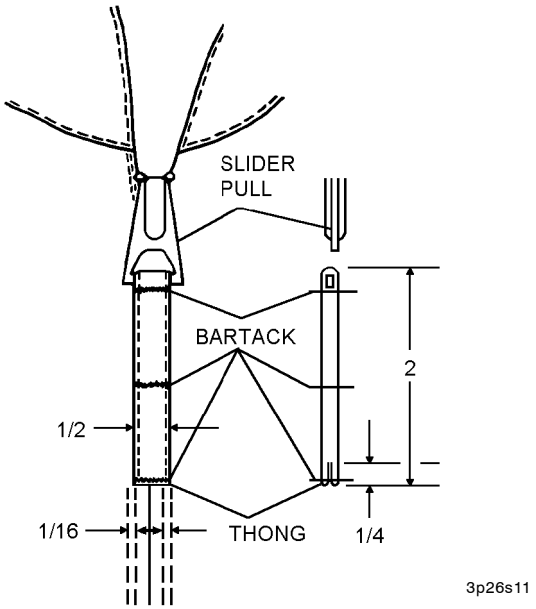

Step 11 - Para 3-34

12. Verify installation of slide fastener, check for proper operation and document in accordance with COMNAVAIRFORINST 4790.2.

3-35. REPLACEMENT OF LOWER LEG POCKET SLIDE FASTENER WITH HOOK AND PILE TAPE. The slide fasteners on the lower leg pockets may be replaced with hook and pile tape at the discretion of the repairing activity. The following procedure is recommended.

Materials Required
(For Flyer's Summer Coveralls and CWU-64/P Only)

Quantity	Description	Reference Number
1 piece, 7 in. X 13 in. per flap	Cloth, Plain and Basket Weave, Type II, Class 1, Sage Green (For Flyer's Summer Coveralls only)	MIL-C-83429 NIIN 01-147-2064 (Note 1)
1 piece, 7 in. X 13 in. per flap	Cloth, Twill, Aramid, High Temperature Resistant, Sage Green (For CWU-64/P only)	MIL-C-81814 NIIN 01-031-9403
18 in.	Fastener Tape, Hook, Type I, Class 1, 1-Inch Width, Sage Green or Tan	MIL-F-21840 NIIN 00-405-2266 NIIN 01-398-6619

Materials Required (Cont)
(For Flyer's Summer Coveralls and CWU-64/P Only)

Quantity	Description	Reference Number
18 in.	Fastener Tape, Pile, Type I, Class 1, 1-Inch Width, Sage Green or Tan	MIL-F-21840 NIIN 00-405-2263 NIIN 01-398-8886
As Required	Thread, Aramid, HighTemperature Resistant, Sage Green	MIL-T-83193 NIIN 00-130-6245
	-or-	
	Thread, Nylon, Type II, Size E, Sage Green	V-T-295 NIIN 00-204-3884

Notes: 1. NIIN 01-147-2064 has been discontinued without replacement in the supply system. NAVAIR Clothing Team has plentiful supply on hand and can distribute in 5 yard increments to any fleet activities who need it. Please contact member of the Personal Protective Clothing Team to request material. Team Members are listed on the PMA202 website.

NOTE

If material is not readily available, it is recommended that unserviceable suits be cut up and used for the manufacture of the flap.

1. Position the pocket flap pattern (Figure 3-3) face up on the aramid cloth and transfer the outline of the pattern to the fabric following the lines exactly. This is for the right leg pocket. Repeat the procedure with the pattern face down for the left leg pocket.

NOTE

All stitching shall be in accordance with ASTM-D-6193, Type 301 lockstitch, 7 to 10 stitches per inch with minimum 1/2-inch backstitch.

2. Fold the pocket flap in half lengthwise with right sides together and stitch flap ends 3/8 inch from edge. Turn flap inside out and topstitch with two rows of stitching.

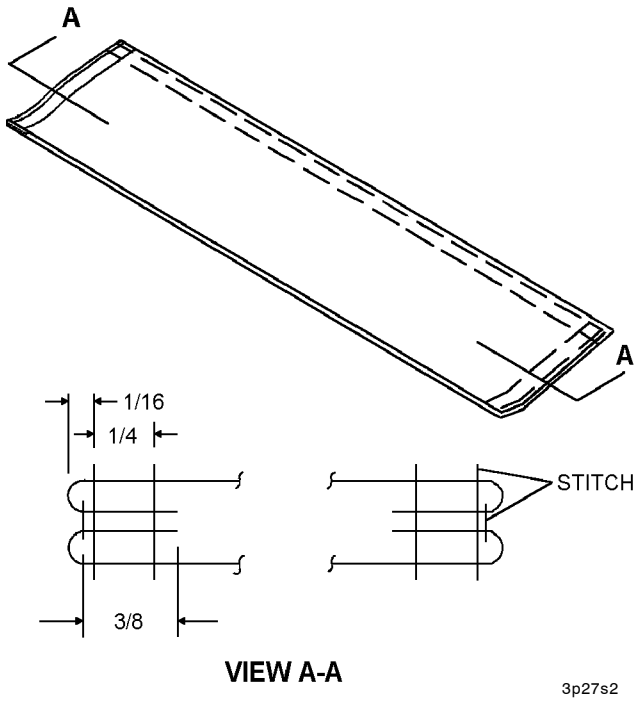

Step 2 - Para 3-35

3. Stitch a 1 X 9 inch long piece of pile tape to the flap.

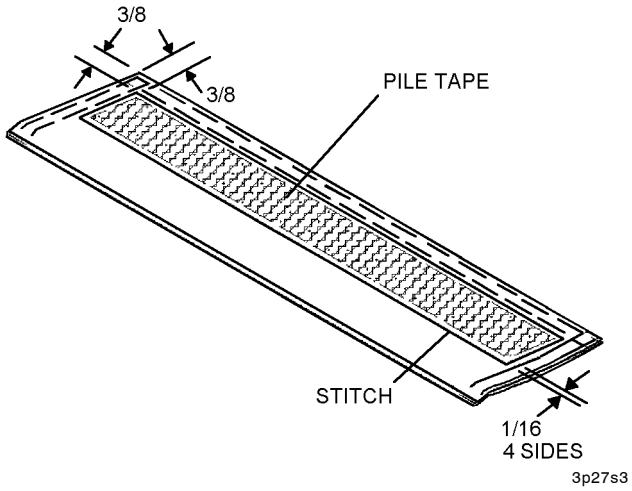

Step 3 - Para 3-35

4. To remove the slide fastener, remove the existing pocket flap. Remove slide fastener from top of pocket. Remove stitching down the side of the pocket as shown. Do not remove the upper most row of stitching across top of pocket.

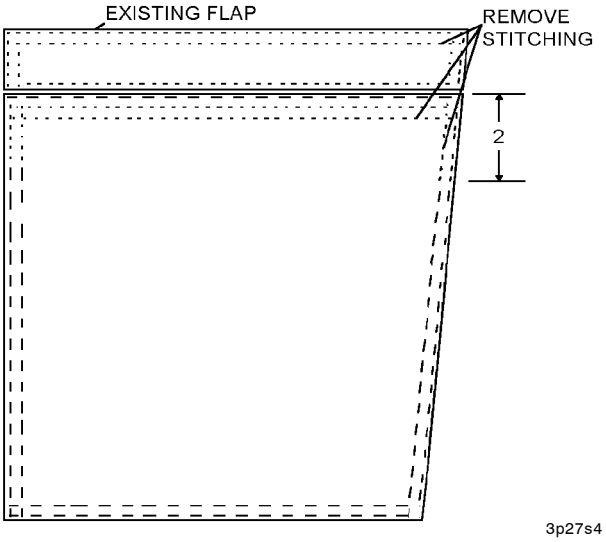

Step 4 - Para 3-35

5. Attach a 1 X 9 inch long piece of hook tape to the top of the lower leg pocket. Locate pocket flap above pocket and restitch in original position. Restitch sides of lower leg pocket in original position.

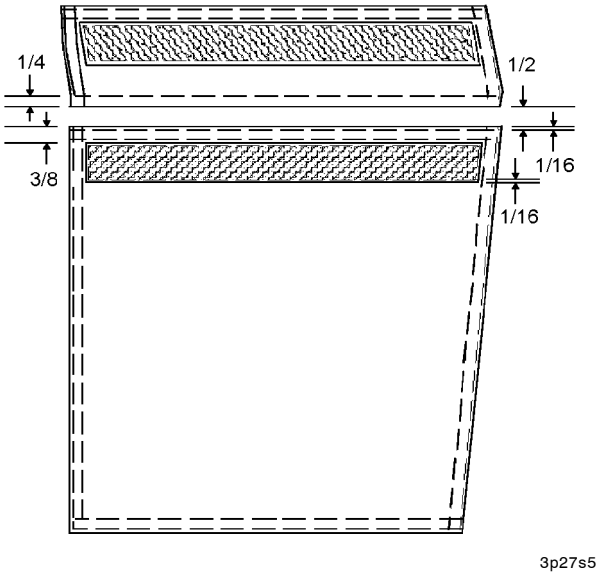

Step 5 - Para 3-35

6. Fold down pocket flap along stitch line and topstitch upper edge of lower leg pocket.

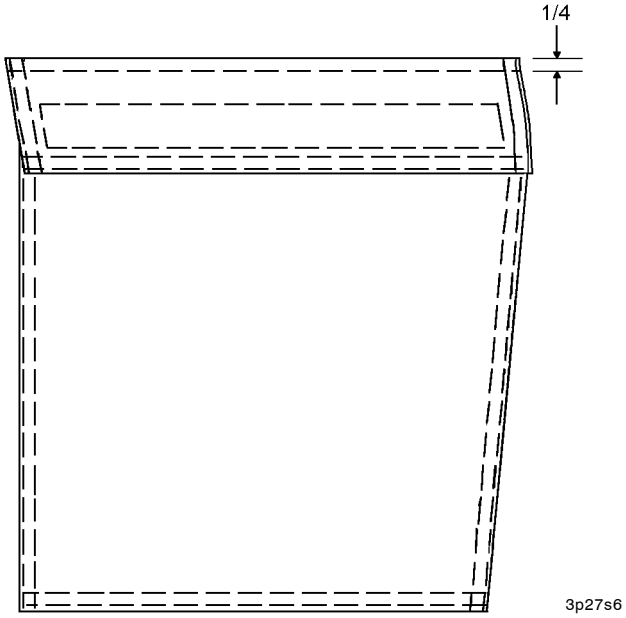

Step 6 - Para 3-35

7. Verify installation of hook and pile tape and document in accordance with COMNAVAIRFORINST 4790.2.

3-36. CLOSURE OF MEAFFTS FLYER'S SUMMER COVERALL LOWER RIGHT LEG PENCIL POCKET. The lower right leg pencil pocket on all MEAFFS flyer's summer coveralls shall be closed in accordance with ACB 834 as follows:

Materials Required

Quantity	Description	Reference Number
As Required	Thread, Nylon, Type II, Size E, Sage Green	V-T-295 NIIN 00-204-3884
1	Razor, Surgical	MIL-R-36450 P/N 20721 NIIN 01-363-1212

1. Carefully remove stitching attaching lower leg pencil pocket flap to lower leg patch pocket. Remove and discard flap.

NOTE

All stitching shall be in accordance with ASTM-D-6193, Type 301 lockstitch, 7 to 10 stitches per inch with minimum 1/2-inch backstitch.

Stitches shall pass through pencil pocket and patch pocket only.

2. Sew pencil pocket closed by sewing pencil pocket to patch pocket using two rows of stitches approximately 1/8-inch below opening of pencil pocket. Stitching rows shall be no greater than 1/8-inch apart and extend across entire opening of pencil pocket.

3. Document in accordance with COMNAVAIRFORINST 4790.2.

3-37. OPTIONAL LEG CLOSURE HOOK AND PILE FASTENER FABRICATION.

Materials Required

Quantity	Description	Reference Number
As Required	Thread, Nylon Size E, Sage Green	V-T-295 NIIN 00-204-3884 or Equivalent
As Required	Thread, Nylon Size E, Tan	V-T-295 NIIN 00-722-6181 or Equivalent
As Required	Fastener Tape, Hook, 2 Inch, Tan	MIL-F-21840 NIIN 01-398-4640 or Equivalent
As Required	Fastener Tape, Pile, 2 Inch, Tan	MIL-F-21840 NIIN 01-398-3555 or Equivalent
As Required	Fastener Tape, Hook, 2 Inch, Sage Green	MIL-F-21840 NIIN 00-405-2267 or Equivalent
As Required	Fastener Tape, Pile, 2 Inch, Sage Green	MIL-F-21840 NIIN 00-405-2265 or Equivalent

NOTE

All stitching shall be in accordance with ASTM-D-6193, Type 301 lockstitch, 7 to 10 stitches per inch, with 1-inch minimum over stitching.

All hook and pile fastener tape is installed to the inseam side of the leg closure zipper.

1. Cut 2 pieces of hook tape, 2 x 3 inches long.

2. Cut 2 pieces of pile tape, 2 x 3 inches long.

3. Lay out coverall with leg closure zippers open.

4. Place the hook tape at the inside edge of the zipper edge seam and 1/4 inch above the bottom the leg fabric. (Hook tape shall be on the inseam side of the leg.)

5. Sew the hook tape to the flight suit leg 1/8 inch from the edge of the hook tape.

6. Lay the pile tape 1/8 inch behind the hook tape sewn on in step 5 1/4 inch above the bottom of the leg fabric.

7. Sew the pile tape to the flight suit leg 1/8 inch from the edge of the pile tape.

8. Repeat these procedures for the other leg.

9. Document in accordance with COMNAVAIRFORINST 4790.2.

NOTE: Procedures for the construction of the pattern.

1. Print out all segments of pattern.
2. Trim all printed segments of pattern at dashed trim line ensuring the alignment marks (crosses) remain on the pattern.
3. Align crosses with adjacent pattern segments and tape in place.
4. After taping, cut out pattern.

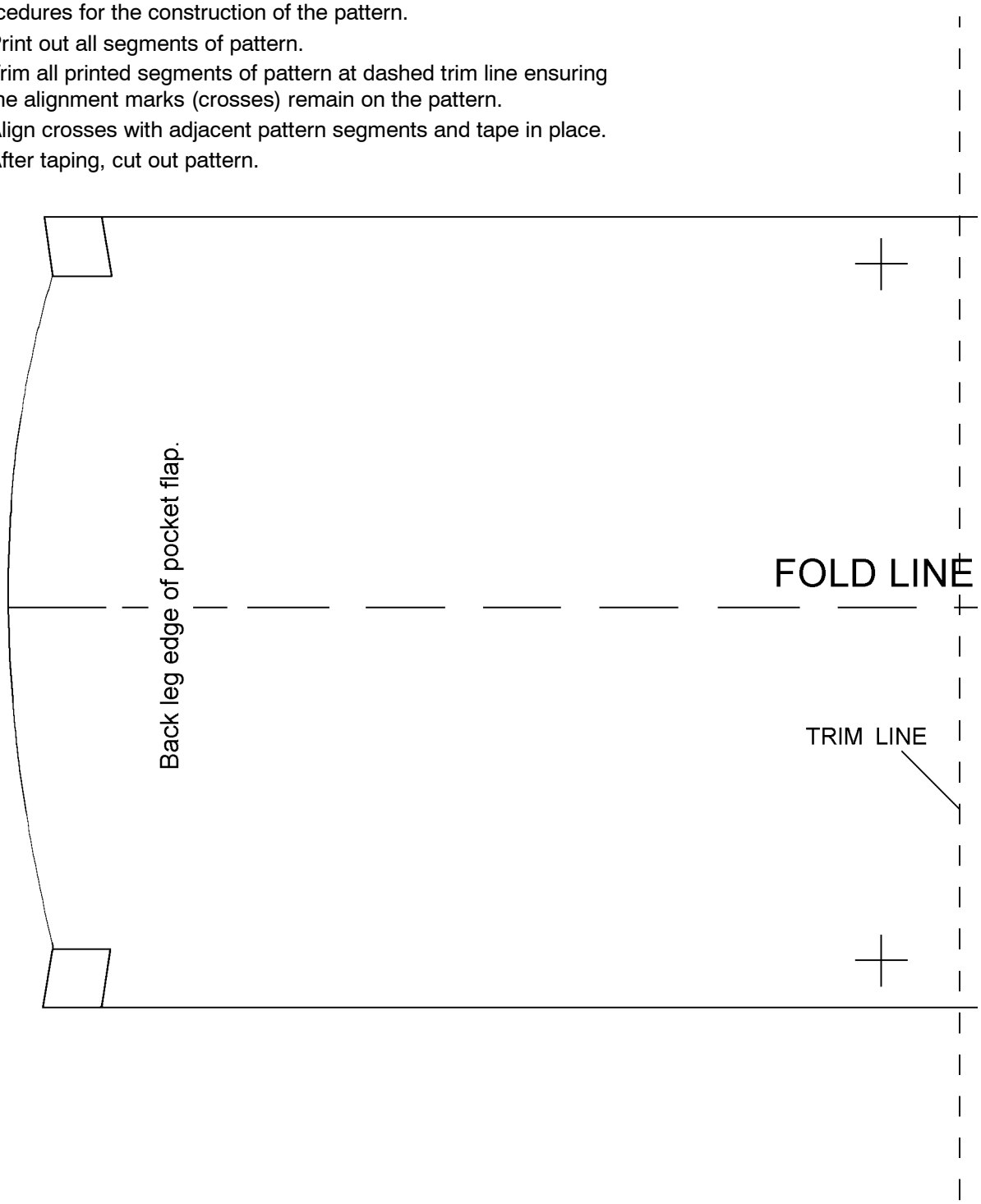

This figure has been divided into multiple segments to facilitate the printing of the pattern.

3-6-a

Figure 3-3. Lower Leg Pocket Flap Pattern (1 of 2)

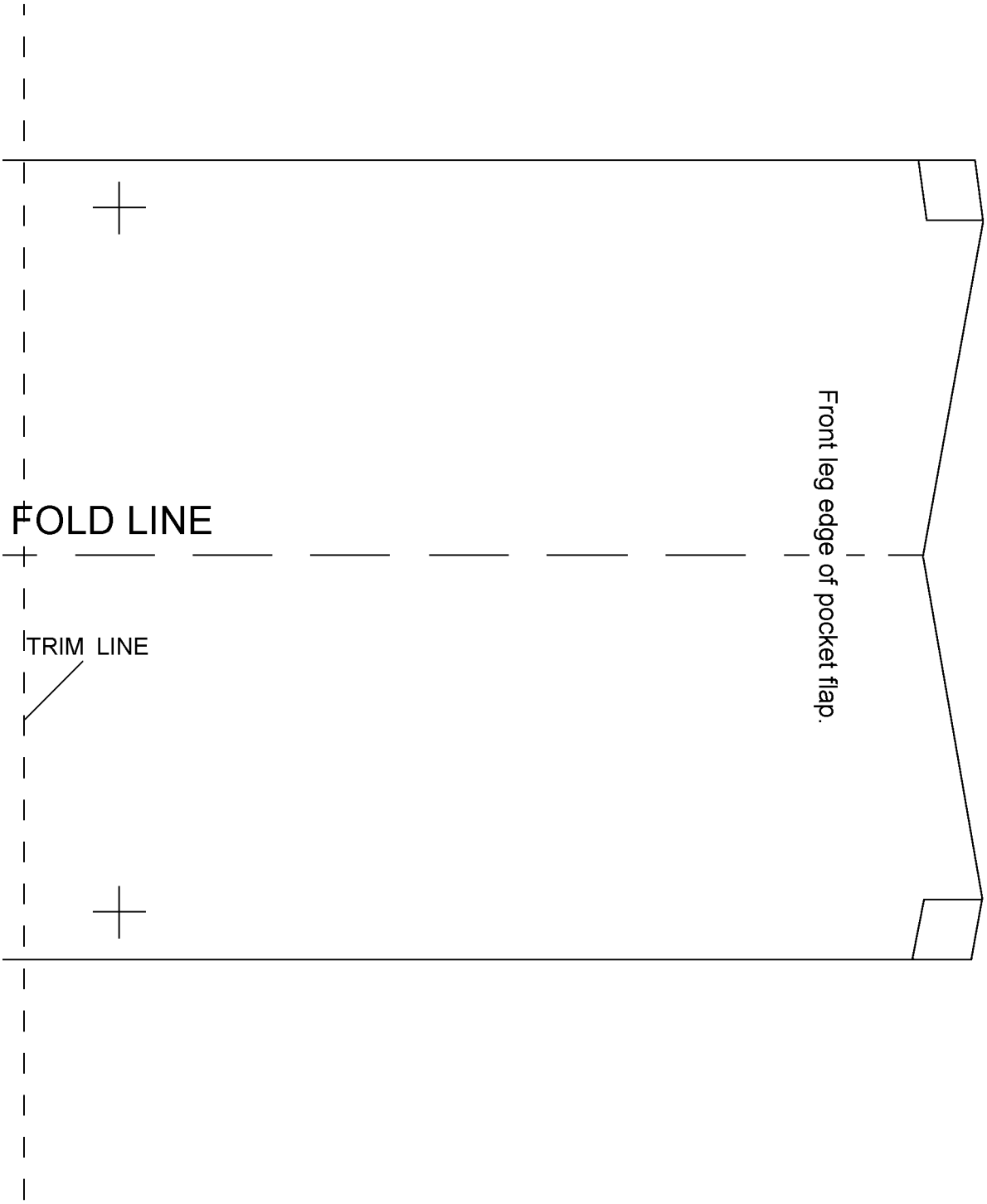

3-6-b

Figure 3-3. Lower Leg Pocket Flap Pattern (2 of 2)

Section 3-3. Cold Weather Flyer's Coveralls, CWU-64/P

3-38. GENERAL.

3-39. The Cold Weather Flyer's Coverall, CWU-64/P (MIL-C-87230) (see Figure 3-4) is designed to be used during low temperature conditions.

3-40. CONFIGURATION.

3-41. The CWU-64/P (see Figure 3-5) is a one piece lined coverall. The outer layer is a fire-resistant aramid twill with an inner layer of aramid or microfiber thermal insulation. It has a slide fastener front closure and bias cut expansible back. The sleeves are adjustable with pile fastener tapes and the legs have slide fasteners in each inseam. The coveralls have two welt pockets on the chest, a concealed hood in the collar, one combination cigarette pack and multiple pencil compartment pocket on the upper left sleeve, two thigh pockets, a knife pocket with a lanyard and two lower leg pockets. The coverall is available in 24 sizes and cold weather underwear may be worn underneath for optimum comfort.

3-42. APPLICATION.

3-43. The Cold Weather Flyer's Coveralls is issued to the individual aircrewmember. It is used as an alternative to the CWU-45/P jacket and CWU-18/P trousers for flights in cold weather.

3-44. FITTING.

NOTE

The anti-g garment should be worn over top of the coverall.

3-45. The cold weather coverall is fitted to the aircrewmember and normally corresponds to his suit size. The coveralls should be used with standard Navy equipment. The coverall sleeves should be worn down and closed for maximum protection. See Table 3-6 for sizes and dimensions.

3-46. MODIFICATIONS.

3-47. There are no current directives affecting the CWU-64/P Cold Weather Flyer's Coveralls. Repairs, fabrications and installations to maintain serviceability are listed in Table 3-7.

3-48. MAINTENANCE.

3-49. The aircrewmember is responsible for pre/postflight inspection and cleaning. Repairs or other maintenance actions required shall be performed by organizational level or above. All maintenance actions, inspections and repairs shall be recorded in accordance with COMNAVAIRFORINST 4790.2.

3-50. INSPECTION.

3-51. The Cold Weather Flyer's Coveralls shall be subjected to a Place-In-Service Inspection, a Preflight/Postflight Inspection, and a 360-Day Special Inspection.

3-52. PLACE-IN-SERVICE INSPECTION. The Cold Weather Flyer's Coveralls shall be inspected prior to Place-In-Service. To conduct the Place-In-Service Inspection proceed as follows:

1. Fit assembly to aircrewmember using fitting procedures outlined in paragraph 3-44.

2. Perform visual inspection in accordance with paragraph 3-54.

3. Annotate aircrewmember's identification BUNO on the tag of the coveralls being careful not to cover identifying data for the coverall (such as NIIN).

4. Document Place-In-Service Inspection in accordance with COMNAVAIRFORINST 4790.2.

3-53. PREFLIGHT/POSTFLIGHT INSPECTION. The aircrewmember is responsible for Preflight/Postflight Inspection. Preflight/Postflight Inspection consists of a visual inspection for condition of the coveralls. Inspect in accordance with paragraph 3-54.

Figure 3-4. Cold Weather Flyer's Coveralls CWU-64/P

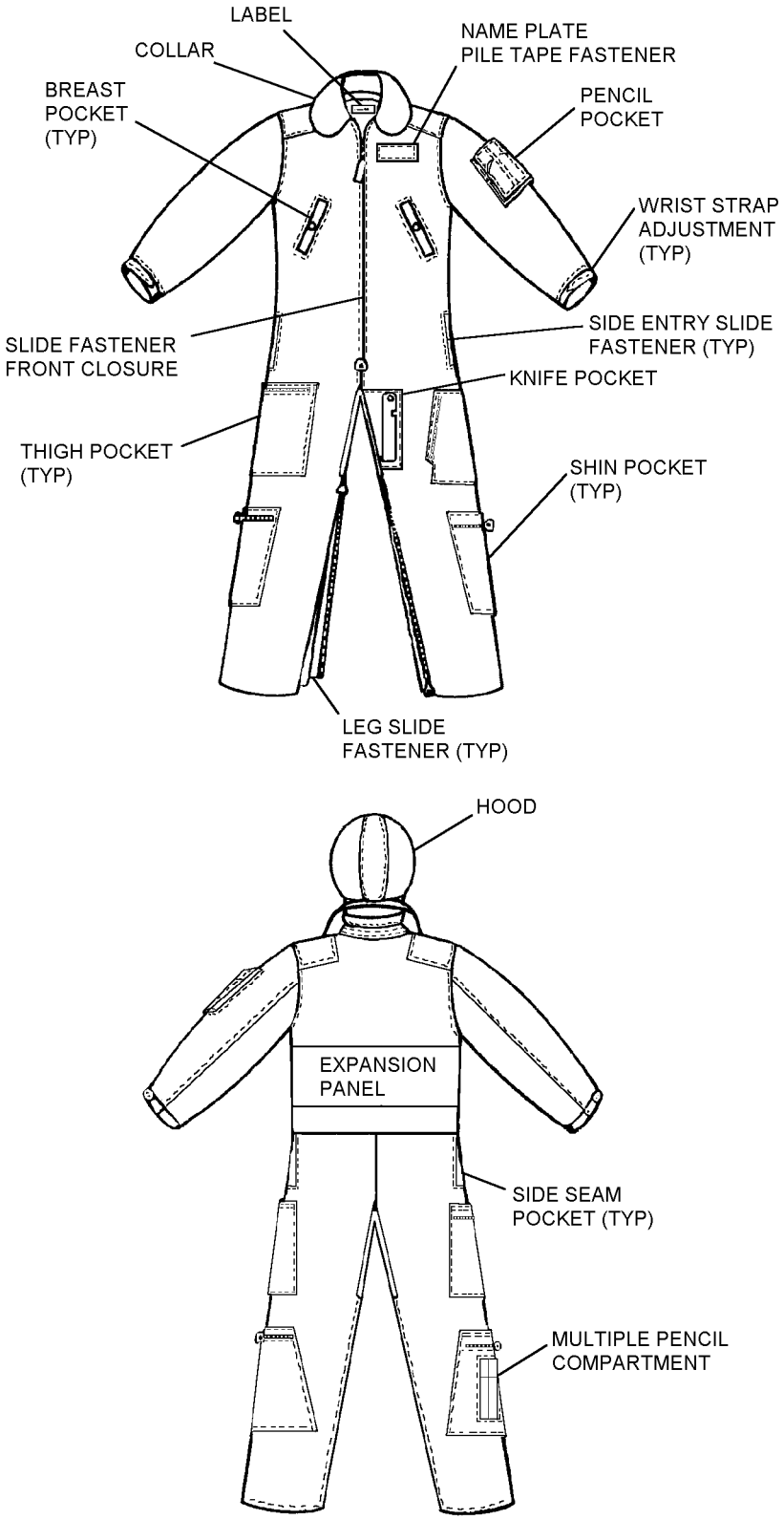

3-8

Figure 3-5. CWU-64/P Coverall Nomenclature

Table 3-6. CWU-64/P Sizes and Dimensions

Coverall Size	Breast Circum.	Sleeve Inseam	Leg Inseam	Reference (NIIN)
32S	35 1/2	20 1/4	28	01-225-4740
32R	35 1/2	22	30	01-225-4741
34S	37	20 3/4	28	01-225-4742
34R	37	22	30	01-225-4743
36S	39 1/2	20 3/4	28	01-225-4744
36R	39 1/2	22	30	01-225-4745
36L	39 1/2	23	32	01-225-4746
38S	42	21	28	01-225-4747
38R	42	23	30	01-225-4748
38L	42	23	32	01-225-4725
40S	45	21 1/4	28	01-225-4726
40R	45	22 1/4	30	01-225-4727
40L	45	23 1/4	32	01-225-4728
42S	47	21 1/4	28	01-225-4729
42R	47	22 1/4	30	01-225-4730
42L	47	23 1/4	32	01-225-4731
44S	49	21 1/4	28	01-225-4732
44R	49	22 1/4	30	01-225-4733
44L	49	23 1/2	32	01-225-4734
46S	51	21 1/4	28	01-225-4735
46R	51	22 1/4	30	01-225-4736
46L	51	23 1/4	32	01-225-4737
48R	53	22 1/4	30	01-225-4738
48L	53	23 1/4	32	01-225-4739

3-54. 360-DAY SPECIAL INSPECTION. The Special Inspection shall be performed by organizational level or above upon issue prior to placing in service, and every 360 days thereafter. To conduct the 360-Day Special Inspection proceed as follows:

WARNING

Worn/thin fabric can cause coveralls to have reduced flame resistance and endanger the aircrewmember in an emergency situation. Coveralls in this condition shall be considered non-RFI.

1. Inspect fabric for cuts, tears and abrasions.

2. Inspect stitching for holes and tears.

3. Inspect snap and hook and pile fasteners for secure attachment and closure.

4. Inspect slide fasteners for damage, security, and ease of operation. Inspect thong pull-tabs for presence and security of attachment.

5. Inspect coveralls to insure that it is a Navy authorized coveralls with proper identification, e.g. NIIN, Contract Number, Part Number etc. Coveralls that have been open purchased from commercial establishments may not have the proper flame resistance and are not authorized.

6. Verify condition of coveralls.

7. Record all maintenance actions and inspections in accordance with COMNAVAIRFORINST 4790.2.

Table 3-7. Repairs/Installations/Fabrications

Description of Repair/Installation/Fabrication	Application	Paragraph
Fabrication and Installation of a Pencil Pocket Flap	All CWU-64/P Coveralls	3-31
Replacement of Loose or Broken Stitching	All CWU-64/P Coveralls	Note 1
Repair of Small Holes or Tears	All CWU-64/P Coveralls	Note 1
Replacement of Hook and Pile Fastener Tapes	All CWU-64/P Coveralls	3-33
Replacement of Slide Fasteners on Lower Leg Pockets	All CWU-64/P Coveralls	3-35
Replacement of Center Front Slide Fasteners	All CWU-64/P Coveralls	3-59
Replacement of Snap Fasteners	All CWU-64/P Coveralls	Note 2

Notes:
1. Broken or loose stitching shall be repaired by using the same type of stitch and stitches per inch as the original stitching. It is recommended that thread conforming to MIL-T-83193, Sage Green (NIIN 00-130-6245 or 00-405-2252) be used for repairs. If patching is necessary, it is preferable to use aramid cloth conforming to MIL-C-83429, Sage Green, (NIIN 01-147-2064). Patches can be cut from discarded coveralls.
2. Defective or missing snap fasteners may be replaced as necessary. It is recommended that snap fasteners conforming to MIL-E-10884, Style 2, finish 2 P/N MS27980-1B, -6B, -7B and -8B be used.

3-55. CLEANING. The coverall may be laundered at home or in a commercial type washer and dryer on a gentle cycle. Laundering in water up to 130°F maximum and tumble drying up to 180°F will not damage or shrink coveralls. The coveralls may be hand laundered using a mild soap and warm water. All soap should be thoroughly washed out. Dry cleaning is acceptable but not recommended as it deteriorates the insulation after repeated usage.

WARNING

If JP-4 fuel, grease or other combustibles are embedded in the fabric, these agents will burn at their normal flash points even though the aramid will not burn until a higher temperature is reached. Be assured that the coveralls are clean. Coveralls which are heavily soiled and/or stained with grease may be cleaned with solvents normally used in commercial dry cleaning establishments.

CAUTION

Do not use starch or bleach. This process will deteriorate the fabrics flame resistivity.

Launder with slide fasteners closed and hook and pile fasteners engaged. Do not press hook and pile fasteners.

NOTE

Lubricate slide fasteners with lead pencil, graphite or wax after cleaning.

3-56. REPAIRS AND FABRICATIONS.

3-57. Repairs and fabrications shall be performed by the lowest maintenance level possible. Repairs other than those listed in Table 3-7 may be performed at the discretion of the repairing maintenance facility.

3-58. REPLACEMENT OF HOOK AND PILE FASTENER TAPES. To replace hook and pile fastener tapes use procedures in paragraph 3-33.

3-59. REPLACEMENT OF CENTER FRONT SLIDE FASTENER. The center front slide fastener may be replaced at the discretion of the repairing activity. The following procedure is recommended:

Materials Required

Quantity	Description	Reference Number
As Required	Thread, Nylon, High Temperature Resistant, Sage Green	MIL-T-83193 NIIN 00-031-6245
	-or-	
	Thread, Nylon, Type II, Size E, Sage Green	V-T-295 NIIN 00-204-3884
6 Inches x 1 1/2 Inches	Cloth, Twill, Aramid, High Temperature Resistant, Sage Green	MIL-C-81814 NIIN 01-031-9403
1	Fastener, Slide Interlocking (See Table 3-5) Style 15, Size MS, Sage Green	A-A-55634

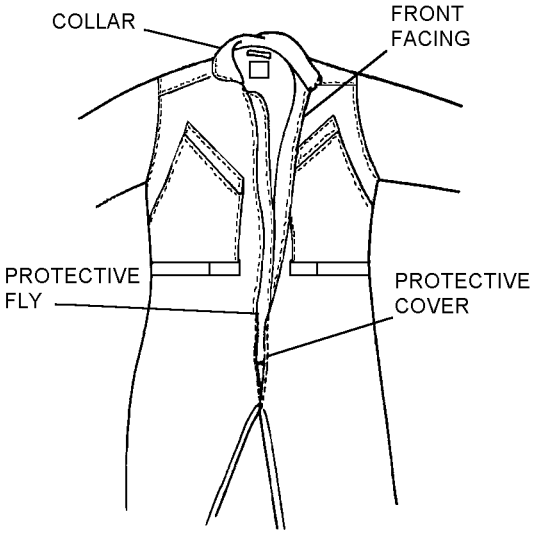

3p45s2

Steps 2 and 3 - Para 3-59

1. If correct length slide fastener is not available, construct a slide fastener of the same length as the original slide fastener.

NOTE

All stitching shall be in accordance with ASTM-D-6193, Type 301 lockstitch, 7 to 10 stitches per inch with minimum 1/2-inch backstitch.

2. Remove all stitching attaching slide fastener to front and protective fly. Cut tape close to collar edge, being careful not to cut material.

3. Stitch cover piece to fronts along beaded edges, stitching along existing stitching.

4. Fold top end of slide fastener tape forward 1/4 inch; stitch.

NOTE

The slide fastener scoops and protective fly shall start 1/2 inch (plus or minus 1/4 inch) from the collar seam and extend to within 1 1/4 inches of the crotch.

5. Position the right slide fastener tape on the protective fly, front (inside) beaded edge of the coverall on the slide fastener with the raw edges even. Join with a single row of stitching 1/4 inch from the edge of the scoops, with the front beaded edge covering the scoops.

6. Fold the facing over the stitching and place a second row of stitching 1/16 inch from the folded edge of the facing, sewing through all thicknesses.

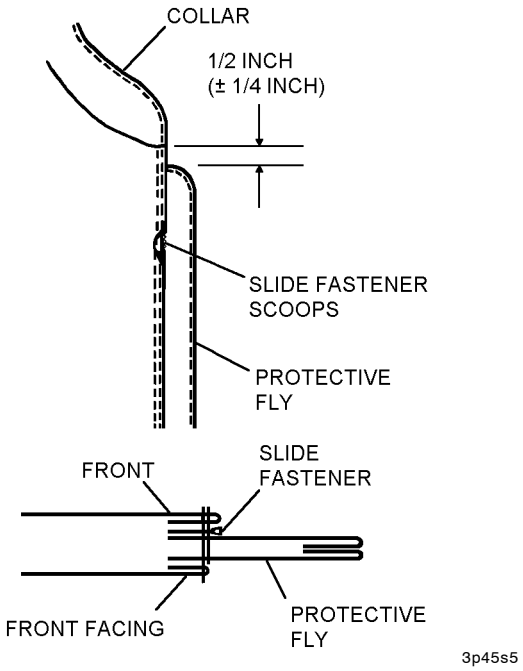

Steps 5 and 6 - Para 3-59

7. Position and join the left slide fastener tape using the same procedure as the right slide fastener tape except that there is no protective fly.

8. Make 1/2-inch wide bartacks through all thicknesses, first bartack 1/4 inch below bottom stop of slide fastener, and second bartack 1 inch below first bartack.

9. To fabricate thong, fold a 6-inch X 1 1/2-inch strip of fabric in half lengthwise. Fold raw edges to inside, 1/4 inch. Stitch 1/16 inch from both folded edges.

10. Pull the thong through the hole in the top slider, with the raw edges even.

11. Fold raw edges to inside, 1/4 inch. Bartack at the bottom, the center, and next to the slider, across the 1/2-inch width.

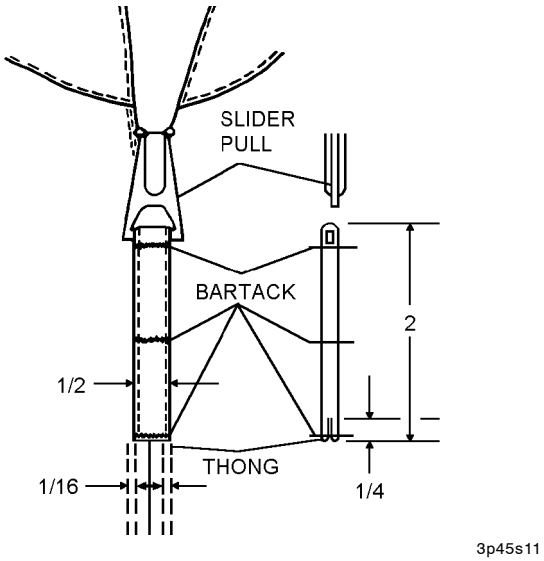

Step 11 - Para 3-59

12. Verify installation of slide fastener and check for proper operation.

13. Document in accordance with COMNAVAIR-FORINST 4790.2.

Section 3-4. Improved Aircrew Battle Dress Uniform (IABDU)

3-60. GENERAL.

3-61. The IABDU is an Army uniform that was authorized for all Navy non-ejection seat aircrew via the annual state of the art clothing and survival items message DTG 301702Z SEP 05. The IABDU is to be worn in conjunction with current aviation flight equipment and is an alternative to the CWU-27/P flight suit (Figure 3-6).

3-62. CONFIGURATION.

3-63. The IABDU consists of a "bush-type" coat and trousers (Figure 3-7). The aircrew coat and trousers are designed to temporarily protect aircrew from fire. The fabric is a high temperature resistant and inherently flame retardant synthetic with no hot melt point or drip characteristics. The fabric is light-weight, will not support combustion, but will begin to char at 700° to 800° F (371° to 427° C). The fabric has good abrasion resistance and is non-absorbent. The uniform is available in a woodland camouflage pattern and solid tan color. Both male and female aircrew wears this uniform. The coat is of a "bush type" design with a collar, reinforced shoulders, a zipper front closure, two inside hanging chest pockets with flaps, two-piece set in sleeves with reinforced elbows and a utility pocket with an external pencil pocket and flap on the left sleeve only. Hook and pile fastener is used on the waist, collar and wrist adjustment tabs and there is a button closure at the neck. Located on the right side front, the coat has an opening backed with a hook and pile fastener pocket for a microclimate cooling garment (MCG) umbilical hose pass through. The IABDU has been assigned a Work Unit Code (WUC) of: TBD.

3-64. APPLICATION

3-65. The IABDU is used as an alternative to the CWU-27/P flight suit and is available only to non-ejection seat aircrew only.

3-66. FITTING.

3-67. The IABDU comes in a wide range of sizes. The coat and trousers are made in 15 sizes (5 sizes and 3 lengths); X-small through X-large in Short, Medium, and Long lengths. Proper fit ensures maximum comfort and prevents interference with mission efficiency. The waist, inseam length and chest measurements are needed for selection of the proper size garment (Chapter 10).

3-68. Using the individual's waist and inseam measurements, refer to Table 3-8 for the proper size of the trousers. Make sure the bottom of the waistband is positioned plus or minus 1/2-inch from the hipbone. (Up to 3-inches is allowed at the waistline, to be adjusted with the waist straps.) Using chest measurement and height refer to Table 3-9 for the proper size of the coat.

3-69. MODIFICATIONS.

3-70. There are no authorized modifications for the IABDU.

3-71. MAINTENANCE

3-72. The aircrewmember is responsible for pre/postflight inspection and cleaning. Repairs or other maintenance actions required shall be performed by organizational level or above. All maintenance actions and inspection shall be recorded in accordance with COMNAVAIRFORINST 4790.2 Series.

3-73. INSPECTION. IABDU inspections consist of Place-In-Service, Preflight/Postflight, Special and Visual Inspections.

3-74. PLACE-IN-SERVICE INSPECTION. The Place-In-Service Inspection is performed prior to issuing the IABDU garments. To conduct the Place-In-Service inspection proceed as follows:

1. Fit assembly to aircrewmember using sizing charts outlined in paragraph 3-66, and Table 3-8 and Table 3-9.

2. Perform Visual Inspection in accordance with paragraph 3-77.

3. Document Place-In-Service Inspection in accordance with COMNAVAIRFORINST 4790.2 Series.

3-75. PREFLIGHT/POSTFLIGHT INSPECTION. The aircrewmember is responsible for Preflight/Postflight Inspection. Preflight/Postflight Inspection consists of a visual inspection for condition of garments. Inspect in accordance with paragraph 3-77.

Figure 3-6. Improved Aircrew Battle Dress Uniform (IABDU)

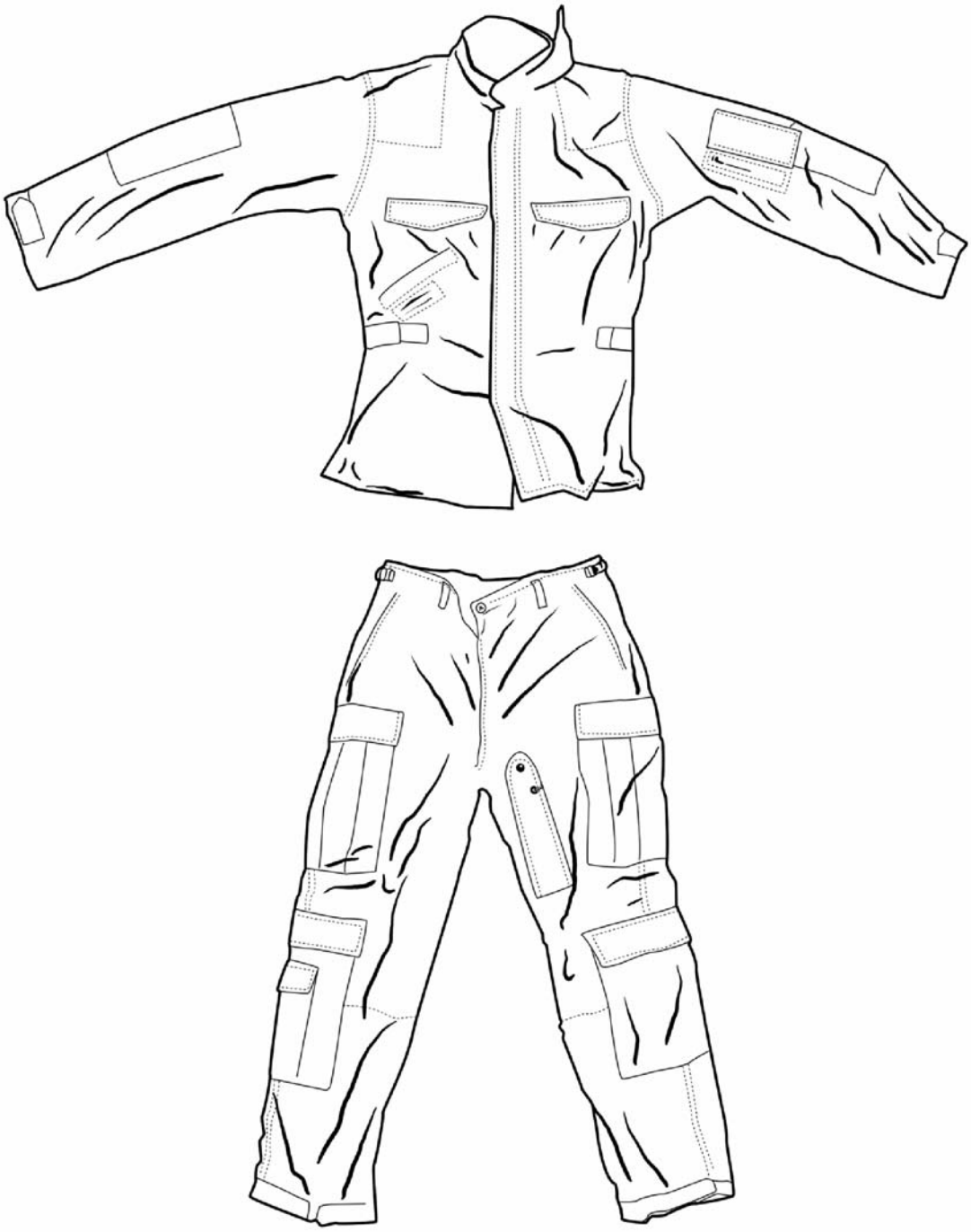

Figure 3-7. IABDU Coat and Trousers

Table 3-8. Trousers, IABDU, Sizes and Finished Measurements (In Inches).

WAIST MEASUREMENTS	INSEAM MEASUREMENTS					
	SHORT 31 3/4 to 33 3/4 inches		REGULAR 33 3/4 to 35 3/4 inches		LONG 35 3/4 to 36 inches	
X-SMALL 27 1/2 to 33 3/4 inches	W	4725	W	4727	W	4728
	T	5186	T	5188	T	5189
	DC		DC		DC	
SMALL 31 1/2 to 35 1/2 inches	W	4730	W	4731	W	4756
	T	5190	T	5192	T	5193
	DC		DC		DC	
MEDIUM 35 1/2 to 39 1/2 inches	W	4758	W	4759	W	4760
	T	5194	T	5196	T	5195
	DC		DC		DC	
LARGE 39 1/2 to 43 1/2 inches	W	4764	W	4763	W	4766
	T	5200	T	5197	T	5199
	DC		DC		DC	
X-LARGE 43 1/2 to 44 inches	W	4761	W	4767	W	4768
	T	5201	T	5202	T	5204
	DC		DC		DC	

Legend - W = Wooland Camouflage
T = Solid Tan
DC = Digital Camouflage
NIIN 8415-01-498-(see column for last four numbers).

Table 3-9. Coat, IABDU, Sizes and Finished Measurements (In Inches).

CHEST MEASUREMENTS	HEIGHT MEASUREMENTS					
	SHORT 63-67 inches		REGULAR 67-71 inches		LONG 71-75 inches	
X-SMALL 29-33 inches	W	4652	W	4653	W	4656
	T	5107	T	5119	T	5123
	DC		DC		DC	
SMALL 33-37 inches	W	4655	W	4657	W	4658
	T	5125	T	5127	T	5131
	DC		DC		DC	
MEDIUM 37-41 inches	W	4659	W	4660	W	4665
	T	5133	T	5134	T	5135
	DC		DC		DC	
LARGE 41-45 inches	W	4667	W	4666	W	4668
	T	5137	T	5140	T	5143
	DC		DC		DC	
X-LARGE 45-49 inches	W	4670	W	4669	W	4671
	T	5144	T	5147	T	5149
	DC		DC		DC	

Legend - W = Wooland Camouflage
T = Solid Tan
DC = Digital Camouflage
NIIN 8415-01-498-(see column for last four numbers).

3-76. 360-DAY SPECIAL INSPECTION. The Special Inspection is shall be performed by organizational level or above upon issue prior to placing in service and every 360 days thereafter as follows:

1. Perform Visual Inspection in accordance with paragraph 3-77.

2. Repair in accordance with paragraph 3-77 or replace as necessary.

3. Document Special Inspection in accordance with COMNAVAIRFORINST 4790.2 Series.

3-77. VISUAL INSPECTION. To perform Visual Inspection of the IABDU proceed as follows:

WARNING

Worn/thin fabric can cause IABDU to have reduced flame resistance and endanger the aircrewmember in an emergency situation. IABDU's in this condition shall be considered non-RFI.

1. Inspect buttons presence and security of attachment.

2. Inspect buttonholes for functionality.

3. Inspect belt loops for security.

4. Inspect pockets for damage.

5. Inspect hems for separation.

6. Inspect waistband-adjusting straps for security.

7. Inspect buckles for security.

8. Inspect slide fasteners for damage, security and ease of operation. Inspect thong pulls for presence and security of attachment.

9. Inspect hook and pile fasteners for grip.

10. Inspect all fabric for cuts, tears and abrasions.

11. Inspection stitching for holes, snags, loose or broken stitching.

12. Repair in accordance with paragraph 3-79 or replace as necessary.

13. Document inspection in accordance with COMNAVAIRFORINST 4790.2 Series.

3-78. CLEANING. Aircrew are responsible for cleaning their IABDU garments. However it is incumbent upon the aircrew survival equipmentmen to ensure that aircrewmember's are aware of the cleaning procedures that come with each of the garments. If the cleaning instructions are not followed, then the flame resistant quality of the garments will not last. It is suggested that the aircrew survival equipmentmen copy these instructions and hand them to the aircrewmember upon issue of the garments. To clean the garments proceed as follows.

CAUTION

Do not starch these uniforms. In event that the uniform is inadvertently starched, restore the fire resistance to its original state by rinsing the garment in warm water.

CAUTION

Do not use any type of bleaching compound in laundering.

NOTE

It is recommended that a new coverall be laundered prior to use in order to soften the fabric and eliminate any possible skin irritation that might occur due to original fabric harshness.

1. The coverall may be laundered at home or in commercial washers and dryers on delicate cycle: Laundering in water up to 180° F (82.2° C) maximum and tumble drying up to 180° F (82.2° C). The fabric is a drip-dry type, requiring no special handling and may be washed as frequently as needed.

2. Use of a commercial fabric softener during rinse, will remove body oil during laundry process. The fabric softeners also serve to remove wrinkles or creases, due to the high temperature resistant quality of "NOMEX" fabric.

3. The IABDU can be dry cleaned as dry cleaning or laundering will not compromise the flame retardant properties of the "NOMEX" and no renewable flame retardant treatment is required.

4. After tumble drying or during drip drying, the coverall should be hung on a plastic or wooden hanger.

3-79. REPAIRS. Repair of the IABDU garments consist of mending small holes and tears, re-stitching seams, replacement of or re-stitching hook/pile fastener tape, replacing buckles, securing loops, pockets buttons etc. All repairs shall be performed by organizational level.

NOTE

Materials used in the repair of Aircrew clothing will be serviceable materials recovered from similar salvaged items, except where specifically prohibited, or will be new materials.

Materials Required

Quantity	Description	Reference Number
As Required	Thread Size E, Olive Drab, Nylon, Type 1	8310-00-262-2772 MIL-T-44100 A-A-50195
As Required	Thread Size E, Olive Drab, Nylon, Type 1	8310-00-281-2898 MIL-T-44100 A-A-50195
As required	Cloth, Plain and Basket Weave, Aramid Type II, CI 5, Woodland Camo # 483	8305-01-345-5234 MIL-C-83429
As Required	Cloth, Plain and Basket Weave, Aramid Type II, CI 6, Desert Tan # 380	8305-00-000-0171 MIL-C-83429-CL8
As Required	Thread, Aramid, Shade #483, Olive Drab	8310-00-492-8397 A-A-50195 MIL-T-43636
As Required	Button, DoD Shade BP # 483, Dull Finish, Size 30 Line, Type II, Class D	8315-00-899-0029 V-B-871
As Required	Fastener Tape, Hook, Type I, 1-inch Green	8315-00-151-6480 MIL-F-21840 A-A-55126
As Required	Fastener Tape, Hook, Type I, 1-1/2 inch, Green	8315-00-151-6481 MIL-F-21840
As Required	Fastener Tape, Hook, Type I, 2-inch, Green	8315-00-151-6479 MIL-F-21840
As Required	Fastener Tape, Pile, 1-inch, Green	8315-00-405-2263 MIL-F-21840
As Required	Fastener Tape, Pile, 1-1/2 in, Green	8315-00-151-6483 MIL-F-21840
As Required	Fastener Tape, Pile, 2 inch, Green	8315-00-405-2265 MIL-F-21840
As Required	Fastener Tape, Hook and Pile Together, 1-inch, Green Camouflage	8315-01-518-1426 A-A-55126
As Required	Fastener Tape, Hook and Pile Together, 1 1/2-inch, Green Camouflage	8315-01-518-1432 A-A-55126
As Required	Fastener Tape, Pile, 1-inch, Green Camouflage	8315-00-151-6484 A-A-55126
As Required	Fastener Tape, Pile, Type I, CI 1, 2- inch, Green Camouflage	8315-00-151-6482 A-A-55126
As Required	Slide Fastener, Type I, Style 7, Size MS	5325-00-159-3722
As Required	Slide Fastener, Type 4, Style 8, Size MS	8325-00-159-3723
As Required	Slide Fastener, Type I, Style 3, Size MS	
As Required	Buckle, Adjustment Strap, Type II, Style 3, Class 3	5340-00-157-7987
As Required	Webbing, Plain Weave, Aramid, .625 inches, Green, Type I of (use Salvage Straps)	8305-00-406-3496 MIL-W-43685
As Required	Tape, Aramid MIL-T-43709 (1/4" width) HISTORY NSN, MAY OR MAY NOT BE PROCURABLE	8315-00-405-2298

Notes: 1. Commercial sources for zippers are:
YKK USA, Inc., 171 Rittenhouse Circle, Bristol, PA 19007, (215) 785-1200
Talon Co., 3535 N.W. 58th St., Miami, FL 33142, (305) 633-9025
Diversified Marketing Group, 230 Windsor Ave., Suite 207, Narberth, PA 19072, (215) 677-5589

1. All repairs shall be accomplished using standard sewing techniques and utilizing the materials listed in the materials required list above.

2. Document all repairs in accordance with COMNAVAIRFORINST 4790.2 Series.

Section 3-5. CWU-36/P Summer Flyer's Jacket

3-80. GENERAL.

3-81. The CWU-36/P Summer Flyer's Jacket (MIL-J-83382) is designed to be worn as an outer garment with the CWU-27/P coverall. See Figure 3-8.

3-82. CONFIGURATION.

3-83. The CWU-36/P jacket consists of an outershell with knitted wristlets and waistband fabricated of high temperature-resistant aramid material. The jacket is lined and designed with a bias cut back and a straight center front opening with a slide fastener closure. The jacket has a cigarette pocket and pencil pocket on the left sleeve and two front patch pockets with envelope storm flaps. The jacket is available in the sizes listed in Table 3-10. The jacket comes in both green and desert tan.

3-84. APPLICATION.

3-85. The summer flyer's jacket is designed to provide thermal protection in temperatures of 50°F and above.

3-86. FITTING.

3-87. The summer flyer's jacket is fitted to the aircrewmember and normally corresponds to his regular jacket size. The jacket is used with standard Navy personal equipment and may be worn under a parachute harness.

3-88. MODIFICATIONS.

3-89. There are no current directives affecting the CWU-36/P summer flyer's jacket. Repairs, fabrications, and installations to maintain serviceability are listed in Table 3-11.

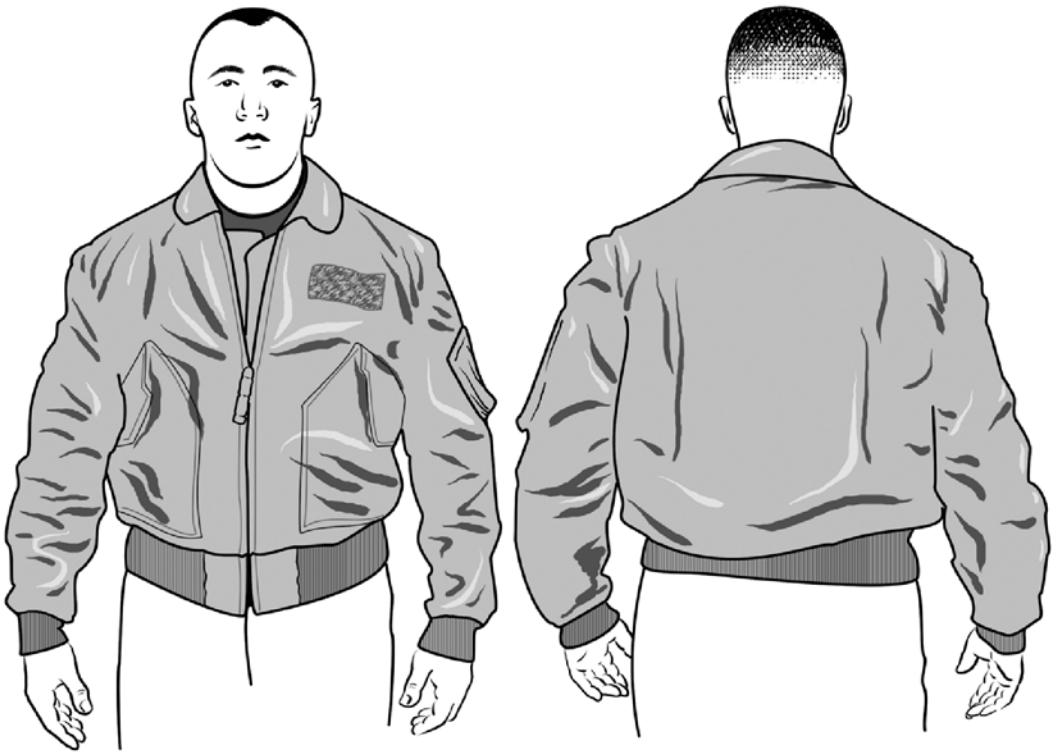

3-12

Figure 3-8. CWU-36/P Summer Flyer's Jacket

Table 3-10. CWU-36/P Jacket Sizes

Size	Chest Measurement	NIIN	
		Sage Green	Desert Tan
Small	34 - 36	01-010-1912	01-491-6184
Medium	38 - 40	01-010-1911	01-491-6188
Large	42 - 44	01-010-1910	01-491-6190
Extra Large	46 - 48	01-010-1913	01-491-6192
Extra Extra Large	50 - 52	01-479-0017	01-491-6197

3-90. MAINTENANCE.

3-91. The aircrewmember is responsible for pre/post-flight inspection and cleaning. Repairs or other maintenance actions required shall be performed by organizational level or above. All maintenance actions, inspections and repairs shall be recorded in accordance with COMNAVAIRFORINST 4790.2.

3-92. INSPECTION.

3-93. The CWU-36/P jacket shall be subjected to a Place-In-Service Inspection, a Preflight/Postflight Inspection, and a 360-Day Special Inspection.

3-94. PLACE-IN-SERVICE INSPECTION. The jacket shall be inspected prior to Place-In-Service. To conduct the Place-In-Service Inspection proceed as follows:

1. Fit assembly to aircrewmember using fitting procedures outlined in paragraph 3-86.

2. Perform visual inspection in accordance with paragraph 3-96.

3. Annotate aircrewmember's identification BUNO on the tag of the jacket being careful not to cover identifying data for the jacket (such as NIIN).

4. Document Place-In-Service Inspection in accordance with COMNAVAIRFORINST 4790.2.

Table 3-11. Repairs/Installations/Fabrications

Description of Repair/ Installation/Fabrication	Application	Paragraph
Fabrication and Installation of a Pencil Pocket Protective Flap	All CWU-36/P Flyer's Jackets	3-31
Replacement of Loose or Broken Stitching	All CWU-36/P Flyer's Jackets	Note 1
Repair of Small Holes or Tears	All CWU-36/P Flyer's Jackets	Note 1
Replacement of Hook and Pile Fastener Tapes	All CWU-36/P Flyer's Jackets	3-33
Replacement of Cuffs	All CWU-36/P Flyer's Jackets	3-138
Replacement of Waistbands	All CWU-36/P Flyer's Jackets	3-139

Notes: 1. Broken or loose stitching shall be repaired by restitching the same type of stitch and stitches per inch as the original stitching. It is recommended that thread conforming to MIL-T-83193, Sage Green, (NIIN 00-130-6245) be used for repairs. If patching is necessary, it is preferable to use aramid cloth conforming to MIL-C-81814, Sage Green (NIIN 01-031-9403). Patches can be cut from discarded jackets.

3-95. PREFLIGHT/POSTFLIGHT INSPECTION.. The aircrewmember is responsible for Preflight/Postflight Inspection. Preflight/Postflight Inspection consists of a visual inspection for condition of the jacket. Inspect in accordance with paragraph 3-96.

3-96. 360-DAY SPECIAL INSPECTION. The Special Inspection shall be performed by organizational level or above upon issue prior to placing in service, and every 360 days thereafter. To conduct the 360-Day Special Inspection proceed as follows:

1. Inspect fabric for cuts, tears and abrasions.

2. Inspect stitching for holes and tears.

3. Inspect snap and hook and pile fasteners for secure attachment and closure.

4. Inspect slide fasteners for damage, security, and ease of operation. Inspect thong pull-tabs for presence and security of attachment.

5. Inspect jacket to insure that it is a Navy authorized garment with proper identification, e.g. NIIN, Contract Number, Part Number etc. CWU-36/P summer flyer's jackets that have been open purchased from commercial establishments may not have the proper flame resistance and are not authorized.

6. Verify condition of jacket.

7. Record all maintenance actions and inspections in accordance with COMNAVAIRFORINST 4790.2.

3-97. CLEANING. The CWU-36/P jacket may be dry cleaned or laundered by machine or hand. Laundering in water up to 140°F maximum and tumble drying up to 180°F will not damage or shrink the jacket. Do not starch. Ironing or pressing is not necessary. Dry cleaning or laundering will not compromise the flame-retardant properties, and no renewable flame-retardant treatment is required.

3-98. REPAIRS AND FABRICATIONS.

3-99. Repairs and fabrications shall be performed by the lowest maintenance level possible. Repairs other than those listed in Table 3-11 may be performed at the discretion of the repairing maintenance facility.

Section 3-6. Type G-1, Intermediate Flyer's Jacket

3-100. GENERAL.

NOTE

Refer to OPNAVINST 10126.4A for management policy and procedures for the control and accounting of leather flight jackets.

3-101. The Intermediate Flyer's Jacket, Type G-1 (MIL-J-7823) (Figure 3-9) is designed to be worn as an outer garment.

3-102. CONFIGURATION.

3-103. The jacket is constructed of leather with a nylon cloth lining. The collar is mouton, and the cuffs and waistband are stretch knit cloth to provide a snug fit. The jacket is equipped with two external pockets and one inner pocket. Bellows, which extend from the shoulders to the waist, prevent the jacket body from riding up or binding with arm movement.

3-104. APPLICATION.

3-105. The leather flyer's jacket is authorized for use during flight as determined by the pertinent NATOPS manuals and Navy Uniform Board regulations.

3-106. FITTING.

3-107. The jacket is fitted to the aircrewmember and normally corresponds to his regular jacket size. The G-1 jacket is available in sizes 36 through 54.

3-108. MODIFICATIONS.

3-109. There are no current directives affecting the G-1.

3-110. MAINTENANCE.

3-111. The aircrewmember is responsible for pre/postflight inspection and cleaning. Repairs or other maintenance actions required shall be performed by organizational level or above. All maintenance actions, inspections and repairs shall be recorded in accordance with COMNAVAIRFORINST 4790.2.

3-112. INSPECTION.

3-113. The Type G-1, Intermediate Flyer's Jacket shall be subjected to a Place-In-Service Inspection, a Preflight/Postflight Inspection, and a 360-Day Special Inspection.

3-114. PLACE-IN-SERVICE INSPECTION. The Type G-1, Intermediate Flyer's Jacket shall be inspected prior to Place-In-Service. To conduct the Place-In-Service Inspection proceed as follows:

1. Fit assembly to aircrewmember using fitting procedures outlined in paragraph 3-106.

2. Perform visual inspection in accordance with paragraph 3-116.

3. Annotate aircrewmember's identification BUNO on the tag of the jacket being careful not to cover identifying data for the jacket (such as NIIN).

4. Document Place-In-Service Inspection in accordance with COMNAVAIRFORINST 4790.2.

3-115. PREFLIGHT/POSTFLIGHT INSPECTION. The aircrewmember is responsible for Preflight/Postflight Inspection. Preflight/Postflight Inspection consists of a visual inspection for condition of the jacket. Inspect in accordance with paragraph 3-116.

3-116. 360-DAY SPECIAL INSPECTION. The Special Inspection shall be performed by organizational level or above upon issue prior to placing in service, and every 360 days thereafter. To conduct the 360-Day Special Inspection proceed as follows:

1. Inspect fabric for cuts, tears and abrasions.

2. Inspect stitching for holes and tears.

3. Inspect snap and hook and pile fasteners for secure attachment and closure.

4. Inspect slide fasteners for damage, security, and ease of operation. Inspect thong pull-tabs for presence and security of attachment.

5. Inspect jacket to insure that it is a Navy authorized garment with proper identification, e.g. NIIN, Contract Number, Part Number etc. Jackets that have been open purchased from commercial establishments may not have the proper flame resistance and are not authorized.

6. Verify condition of jacket.

7. Record all maintenance actions and inspections in accordance with COMNAVAIRFORINST 4790.2.

3-117. REPAIRS. Repairs shall be limited to replacing cuffs, waistbands, and slide fasteners, and restitching partially open seams. Repairs other than listed in this paragraph may be authorized by the repairing maintenance activity.

Materials Required

Quantity	Description	Reference Number
As Required	Thread, Brown Type 1, Class A Size E	V-T-295 NIIN 00-275-2790
1	Fastener, Slide Interlocking, Brown	A-A-55634 NIIN 00-275-4435
1	Waistband, Brown	MIL-C-3735 NIIN 00-765-2859
2	Cuff, Knit, Brown	MIL-C-3735 NIIN 00-262-2578

Notes: 1. All stitching shall be in accordance with ASTM-D-6193, Type 301 lockstitch, 7 to 10 stitches per inch with minimum 1/2-inch backstitch.

2. Slide fasteners will need to be cut to fit jacket.

Figure 3-9. Intermediate Flyer's Jacket, Type G-1

Section 3-7. CWU-45/P Cold Weather Flyer's Jacket

3-118. GENERAL.

3-119. The Cold Weather Flyer's Jacket, CWU-45/P (MIL-J-83388), is designed to be worn as an outer garment in cold weather. See Figure 3-10 and Figure 3-11.

3-120. CONFIGURATION.

3-121. The CWU-45/P is a waist-length jacket which consists of an aramid outer shell, quilted lining, pockets, wristlets, and waistband. An attachable aramid cold weather flyer's hood (MIL-J-83388) with aramid mouton lining, fur edge and drawstring closure is available.

3-122. APPLICATION.

3-123. The cold weather flyer's jacket is designed to provide thermal anti-exposure protection at low temperatures.

3-124. FITTING.

3-125. The cold weather flyer's jacket is fitted to the aircrewmember and normally corresponds to his regular jacket size. See Table 3-12. The jacket is used with standard Navy personal equipment, and may be worn under a parachute harness.

3-126. MODIFICATIONS.

3-127. The CWU-45/P jacket shall be updated by comparing the configuration of the assembly with the directives listed in Table 3-13. Repairs, fabrications and installations to maintain serviceability are listed in Table 3-14. Repairs, other than those listed, may be performed at the discretion of the repairing maintenance activity.

3-128. MAINTENANCE.

3-129. The aircrewmember is responsible for pre/postflight inspection and cleaning. Repairs or other maintenance actions required shall be performed by organizational level or above. All maintenance actions, inspections and repairs shall be recorded in accordance with COMNAVAIRFORINST 4790.2.

3-130. INSPECTION.

3-131. The CWU-45/P jacket shall be subjected to a Place-In-Service Inspection, a Preflight/Postflight Inspection, and a 360-Day Special Inspection.

3-132. PLACE-IN-SERVICE INSPECTION. The CWU-45/P jacket shall be inspected prior to Place-In-Service. To conduct the Place-In-Service inspection proceed as follows:

1. Fit assembly to aircrewmember using fitting procedures outlined in paragraph 3-124.

2. Perform visual inspection in accordance with paragraph 3-134.

3. Annotate aircrewmember's identification BUNO on the tag of the jacket being careful not to cover identifying data for the jacket (such as NIIN).

4. Document Place-In-Service Inspection in accordance with COMNAVAIRFORINST 4790.2.

3-133. PREFLIGHT/POSTFLIGHT INSPECTION. The aircrewmember is responsible for Preflight/Postflight Inspection. Preflight/Postflight Inspection consists of a visual inspection for condition of the jacket. Inspect in accordance with paragraph 3-134.

3-134. 360-DAY SPECIAL INSPECTION. The Special Inspection shall be performed by organizational level or above upon issue prior to placing in service, and every 360 days thereafter. To conduct the 360-Day Special Inspection proceed as follows:

1. Inspect fabric for cuts, tears and abrasions.

2. Inspect stitching for holes and tears.

3. Inspect snap and hook and pile fasteners for secure attachment and closure.

4. Inspect slide fasteners for damage, security, and ease of operation. Inspect thong pull-tabs for presence and security of attachment.

5. Inspect jacket to insure that it is a Navy authorized garment with proper identification, e.g. NIIN, Contract Number, Part Number etc. Jackets that have been open purchased from commercial establishments may not have the proper flame resistance and are not authorized.

6. Verify condition of jacket.

7. Record all maintenance actions and inspections in accordance with COMNAVAIRFORINST 4790.2.

3-16

Figure 3-10. Cold Weather Flyer's Jacket, CWU-45/P with Hood Attached and CWU-18/P Extreme Cold Weather Trousers

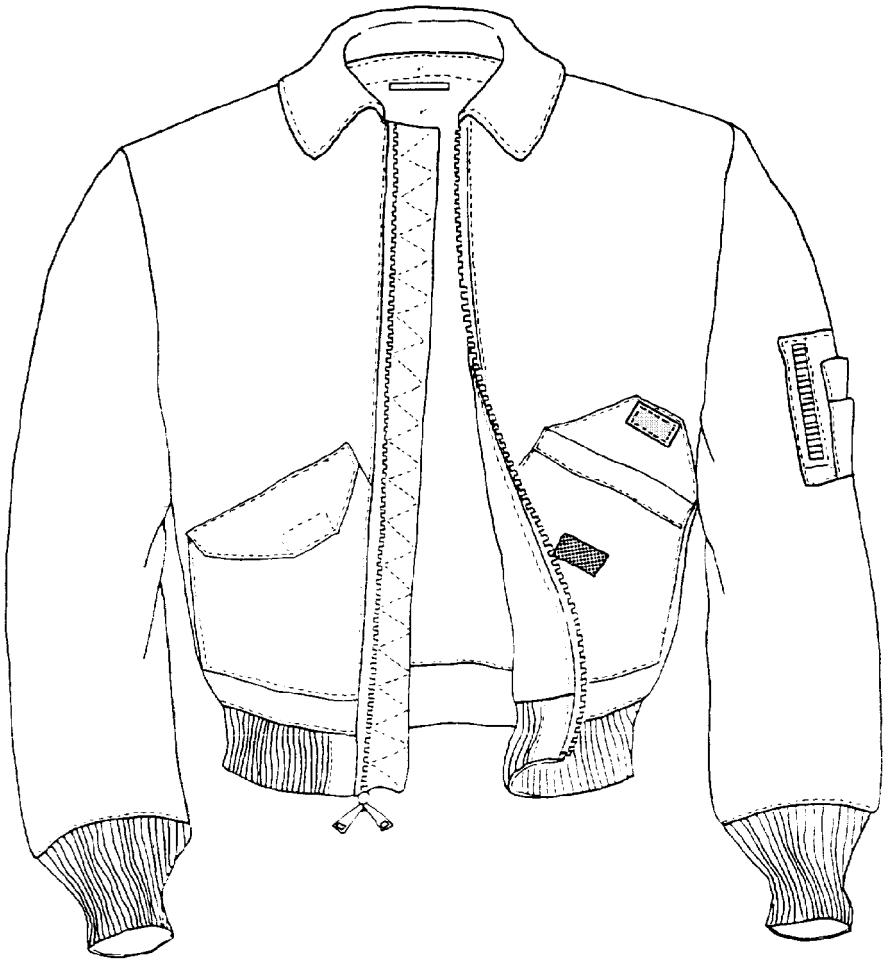

3-17

Figure 3-11. Cold Weather Flyer's Jacket, CWU-45/P

Table 3-12. CWU-45/P Sizes

Nomenclature	Size	Chest Measurement	NIIN	
			Sage Green	Desert Tan
CWU-45/P Cold Weather Flyer's Jacket	Small	34 - 36	00-310-1111	01-491-6122
	Medium	38 - 40	00-310-1126	01-491-6124
	Large	42 - 44	00-310-1133	01-491-6125
	Extra Large	46 - 48	00-310-1140	01-491-6127
	Extra Extra Large	50 - 52	01-422-1505	01-491-6129

Table 3-13. CWU-45/P Directives

Description of Modification	Application	Modification Code
Attachment of Winter Flyer's Hood CWU-45/P Cold Weather Flyer's Jacket	CWU-45/P Jackets issued to aircrews for operations in extreme cold weather conditions	66-540

Table 3-14. Repairs/Installations/Fabrications

Description of Repair/Installation/Fabrication	Application	Paragraph
Fabrication and Installation of a Pencil Pocket Flap	All CWU-45/P Flyer's Jackets	3-31
Replacement of Loose or Broken Stitching	All CWU-45/P Flyer's Jackets	Note 1
Repair of Small Holes or Tears	All CWU-45/P Flyer's Jackets	Note 1
Replacement of Hook and Pile Fastener Tapes	All CWU-45/P Flyer's Jackets	3-33
Replacement of Cuffs	All CWU-45/P Flyer's Jackets	3-138
Replacement of Waistband	All CWU-45/P Flyer's Jackets	3-139
Attachment of Winter Flyer's Hood	All CWU-45/P Flyer's Jackets for operation in extreme cold weather (Optional)	3-140

Notes: 1. Broken or loose stitching shall be repaired by restitching the same type of stitch and stitches per inch as the original stitching. It is recommended that thread conforming to MIL-T-83193, Sage Green (NIIN 00-130-6245) be used for repairs. If patching is necessary, it is preferable to use aramid cloth conforming to MIL-C-81814, Sage Green, (NIIN 00-031-9403). Patches can be cut from discarded jackets.

3-135. CLEANING. The jacket and hood may be drycleaned or laundered by machine or by hand. Laundering in water up to 140°F maximum and tumble drying up to 180°F will not damage or shrink the jacket. Do not starch. Ironing or pressing is not necessary. Dry cleaning or laundering will not destroy the flame-retardant properties and no renewable flame-retardant treatment is required.

3-136. REPAIRS AND FABRICATIONS.

3-137. Repairs and fabrications shall be performed by the lowest maintenance level possible. Repairs other than those listed in Table 3-14 may be performed at the discretion of the repairing maintenance facility.

3-138. REPLACEMENT OF CUFFS. To replace knit cuffs, proceed as follows:

Materials Required

Quantity	Description	Reference Number
As Required	Cuffs, Knit, Wrist Type IV, Class 2, Size 2, Sage Green	MIL-C-3735 NIIN 01-028-3627
As Required	Thread, Nylon High Temperature Resistant, Sage Green	MIL-T-83193 NIIN 00-130-6245
	-or-	
	Thread, Nylon, Type II, Size E, Sage Green	V-T-295 NIIN 00-204-3884

NOTE

All stitching shall be in accordance with ASTM-D-6193, Type 301 lockstitch, 7 to 10 stitches per inch with minimum 1/2-inch backstitch. Stitch along original stitching lines when possible.

1. Using a sharp razor blade or knife, carefully cut through thread attaching cuff to sleeve. Do not cut sleeve fabric. Discard old cuff.

2. With edges even, attach new cuff to sleeve outer shell, stretch cuff to fit. Stitch along original stitching lines. Keep jacket lining clear of stitching.

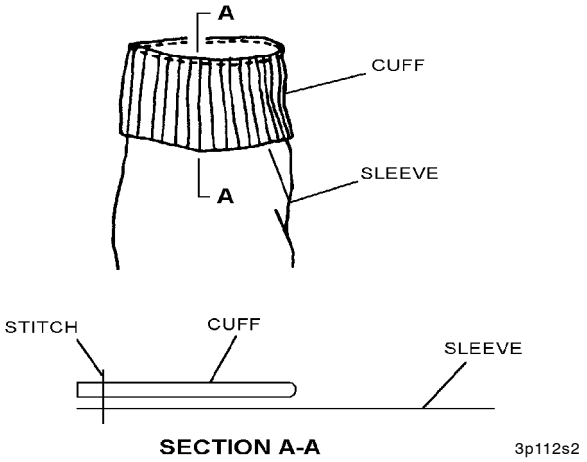

Step 2 - Para 3-138

NOTE

Check that sleeve and lining are not twisted before sewing together.

3. Fold cuff down. Fold edge of sleeve lining along original fold line. Place folded edge of lining next to stitching line on inside of cuff. Stitch 3/8 inch from folded edge of lining.

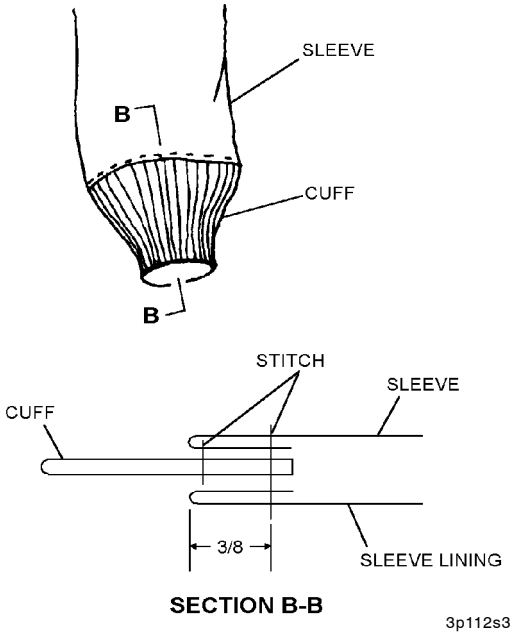

Step 3 - Para 3-138

4. Verify cuff installation.

5. Document in accordance with COMNAVAIRFORINST 4790.2.

3-139. REPLACEMENT OF WAISTBAND. To replace the waistband, proceed as follows:

Materials Required

Quantity	Description	Reference Number
As Required	Cloth, Knitted Type IV, Class 3, Sage Green	MIL-T-83193 NIIN 00-130-6245
As Required	Thread, Nylon, High Temperature Resistant, Sage Green	MIL-T-83193 NIIN 00-130-6245
	-or-	
	Thread, Nylon, Type II, Size E, Sage Green	V-T-295 NIIN 00-204-3884

NOTE

All stitching shall be in accordance with ASTM-D-6193, Type 301 lockstitch, 7 to 10 stitches per inch with minimum 1/2-inch backstitch.

1. Using a sharp razor blade or knife, carefully cut through thread attaching waistband to jacket. Do not cut fabric.

2. Measure original waistband along folded edge. Cut new waistband to this length. Width shall be 4 inches. Discard old waistband.

NOTE

Use caution when sewing, jacket fabric frays easily.

3. Fold waistband in half lengthwise. With all edges even, attach waistband to jacket; allow ends to overlap waistband tab 1/2 inch. Stretch waistband to fit. Stitch along original stitching line, keeping jacket lining clear of stitching. Leave 1/2 inch overlap at each end of waistband free of stitching.

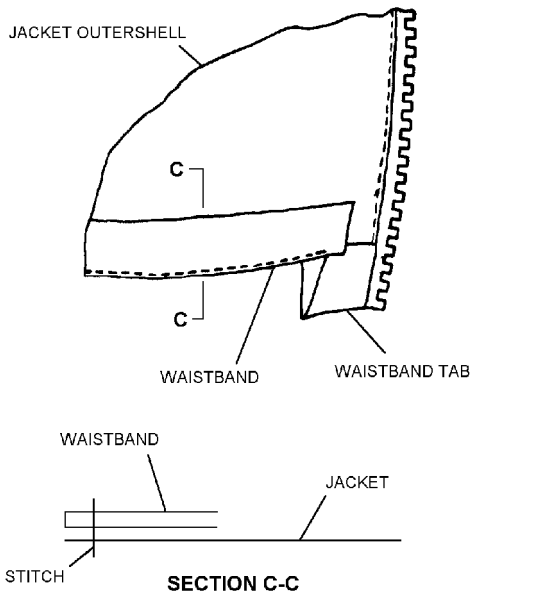

Step 3 - Para 3-139

4. Fold waistband down. Fold edge of jacket lining along original fold line. Place folded edge of lining along stitching line on inside of waistband. Stitch 3/8 inch from folded edge of lining.

5. Making sure that inside and outside waistband tabs are aligned, sandwich ends of waistband between tabs. Stitch through all thicknesses with a double row of top stitching, 1/16 inch and 3/8 inch from folded edge of waistband tab.

6. Verify waistband installation.

7. Document in accordance with COMNAVAIRFORINST 4790.2.

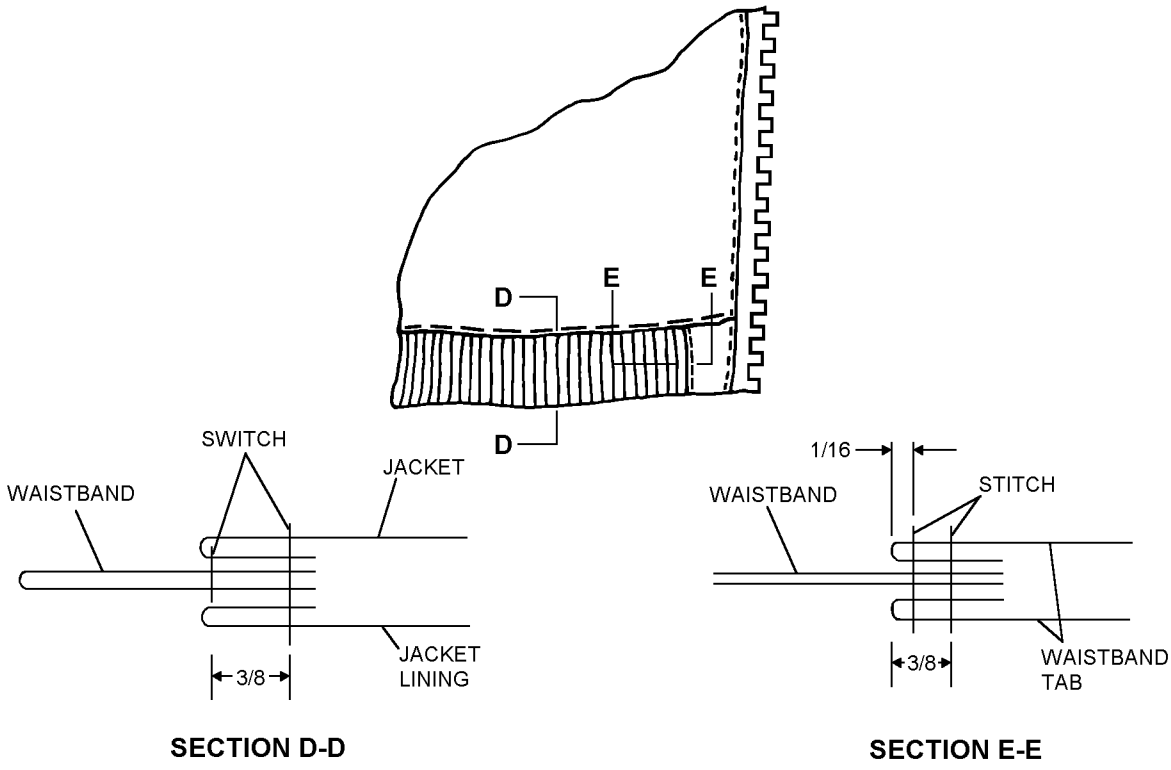

Steps 4 and 5 - Para 3-139

3-140. ATTACHMENT OF WINTER FLYER'S HOOD (MIL-J-83388). The winter flyer's hood can be attached to the CWU-45/P jacket to provide additional warmth in a cold weather environment. Attachment is optional and shall be performed at organizational level or above. Procedures for attaching the hood are as follows:

Materials Required

Quantity	Description	Reference Number
As Required	Needle, Glover's, Type I, Class 2, Size 0	A-A-5506, NIIN 00-162-7041, or equivalent
As Required	Thread, Nylon, Type I, Class A, Size FF, Sage Green	V-T-295 NIIN 00-204-3787

1. Close jacket entrance slide fastener.

a. Grasp jacket by collar corners so collar is standing straight up exposing the collar stand.

NOTE

The collar stand is the piece of material between the jacket back and the bottom of the collar.

b. Fold the collar and collar stand in half so the collar corners are matched together.

c. Smooth the fold flat.

d. On the outside of the jacket, mark the fold line on the collar stand using grease pencil. This is the center line of the collar stand.

2. Locate the center seam on the inside of the base of the hood.

NOTE

The center seam is located between the two center button holes.

3. Align the center seam of the hood with the fold line marked on the collar stand.

a. Ensure the bottom of the hood is aligned with the bottom of the collar stand.

b. Fasten the hood and the collar stand together at that point using a pin.

4. Locate the four button holes along the bottom of the hood.

a. Check to ensure bottom of the hood is aligned with the bottom of the collar stand.

b. Put the grease pencil through the button holes of the hood and mark the center of each button hole on the collar stand using the grease pencil.

5. Remove the pin and the hood.

NOTE

Leave sufficient thread below the overhand knot to secure the thread after each button is installed.

6. Thread needle using approximately 26 inches of thread and tie the ends together using an overhand knot. (If necessary, see Glossary for overhand knot.)

7. Sew a button on the collar stand at each of the four grease pencil marked positions using a minimum of two turns of double thread through each of the two holes in each button.

a. Secure each button using a surgeon's knot followed by a square knot.

b. Tie an overhand knot in the remaining four thread ends as close as possible to the square knot.

c. Cut the thread and remove the needle.

8. Fasten hood to jacket ensuring buttons and button holes are properly aligned.

9. Document in accordance with COMNAVAIRFORINST 4790.2.

Section 3-8. CWU-18/P Extreme Cold Weather Trousers

3-141. GENERAL.

3-142. The Extreme Cold Weather Trousers, CWU-18/P (MIL-T-83385) (Figure 3-12) are designed to provide protection to an aircrewmember in adverse low temperature conditions. It may be worn in place of the constant wear anti-exposure assembly. It may also be worn with CWU-60/P Anti-Exposure Coverall to provide cold water anti-exposure protection.

3-143. CONFIGURATION.

3-144. The CWU-18/P trousers are fabricated of high temperature-resistant aramid materials throughout and consist of an outer shell with reinforcement patches on the seat and knees, knitted anklet cuffs, and a quilted lining. The trousers have a slide fastener fly closure, a knife pocket, two hip pockets, two thigh pockets, and side pass-throughs. The leg openings are closed with slide fasteners on the outer sides of the legs. A waist adjustment strap is positioned on the back of the trousers. The trousers also have belt loops and button-on elastic suspenders. The trousers are available in waist sizes from 28 to 46 inches.

3-145. APPLICATION.

3-146. The CWU-18/P trousers are worn by aircrewmembers in place of constant wear CWU-64/P Winter Flyer's Coveralls when climatic conditions warrant. The trousers are intended to be worn with the CWU-45/P cold weather flyer's jacket.

3-147. FITTING.

3-148. The trousers are fitted to the aircrewmember and normally corresponds to his/her regular pant size. The trousers are available in waist sizes from 28 to 46 inches.

3-149. MODIFICATIONS.

3-150. There are no current directives affecting the CWU-18/P trousers.

3-151. MAINTENANCE.

3-152. The aircrewmember is responsible for pre/postflight inspection and cleaning. Repairs or other maintenance actions required shall be performed by organizational level or above. All maintenance actions, inspections and repairs shall be recorded in accordance with COMNAVAIRFORINST 4790.2.

3-153. INSPECTION.

3-154. The trousers shall be subjected to a Place-In-Service Inspection, a Preflight/Postflight Inspection, and a 360-Day Special Inspection.

3-155. PLACE-IN-SERVICE INSPECTION. The trousers shall be inspected prior to Place-In-Service. To conduct the Place-In-Service Inspection proceed as follows:

1. Fit assembly to aircrewmember using fitting procedures outlined in paragraph 3-147.

2. Perform visual inspection in accordance with paragraph 3-156.

3. Annotate aircrewmember's identification BUNO on the tag of the trousers being careful not to cover identifying data for the trousers (such as NIIN).

4. Document Place-In-Service Inspection in accordance with COMNAVAIRFORINST 4790.2.

3-156. PREFLIGHT/POSTFLIGHT INSPECTION. The aircrewmember is responsible for Preflight/Postflight Inspection. Preflight/Postflight Inspection consists of a visual inspection for condition of the trousers. Inspect in accordance with paragraph 3-157.

3-157. 360-DAY SPECIAL INSPECTION. The Special Inspection shall be performed by organizational level or above upon issue prior to placing in service, and every 360 days thereafter. To conduct the 360-Day Special Inspection proceed as follows:

1. Inspect fabric for cuts, tears and abrasions.

2. Inspect stitching for holes and tears.

3. Inspect buttons and snap fasteners for secure attachment and closure.

4. Inspect slide fasteners for damage, security, and ease of operation. Inspect thong pull-tabs for presence and security of attachment.

5. Inspect trousers to insure that it is a Navy authorized garment with proper identification, e.g. NIIN, Contract Number, Part Number etc. Trouser

that have been open purchased from commercial establishments may not have the proper flame resistance and are not authorized.

6. Verify condition of trousers.

7. Record all maintenance actions and inspections in accordance with COMNAVAIRFORINST 4790.2.

3-158. CLEANING. The trousers may be dry cleaned or laundered by machine or hand. Laundering in water up to 140°F maximum and tumble drying up to 180°F will not damage or shrink the trousers. Do not starch. Ironing or pressing is not necessary. Dry cleaning or laundering will not compromise the flame-retardant properties, and no renewable flame-retardant treatment is required.

3-159. REPAIRS AND FABRICATIONS.

3-160. Trouser repairs shall be limited to patching small holes and tears, restitching loose seams, and replacement of suspender buttons. Standard shop and sewing procedures shall be observed. Replacement of slide fasteners shall be performed at the discretion of the maintenance activity.

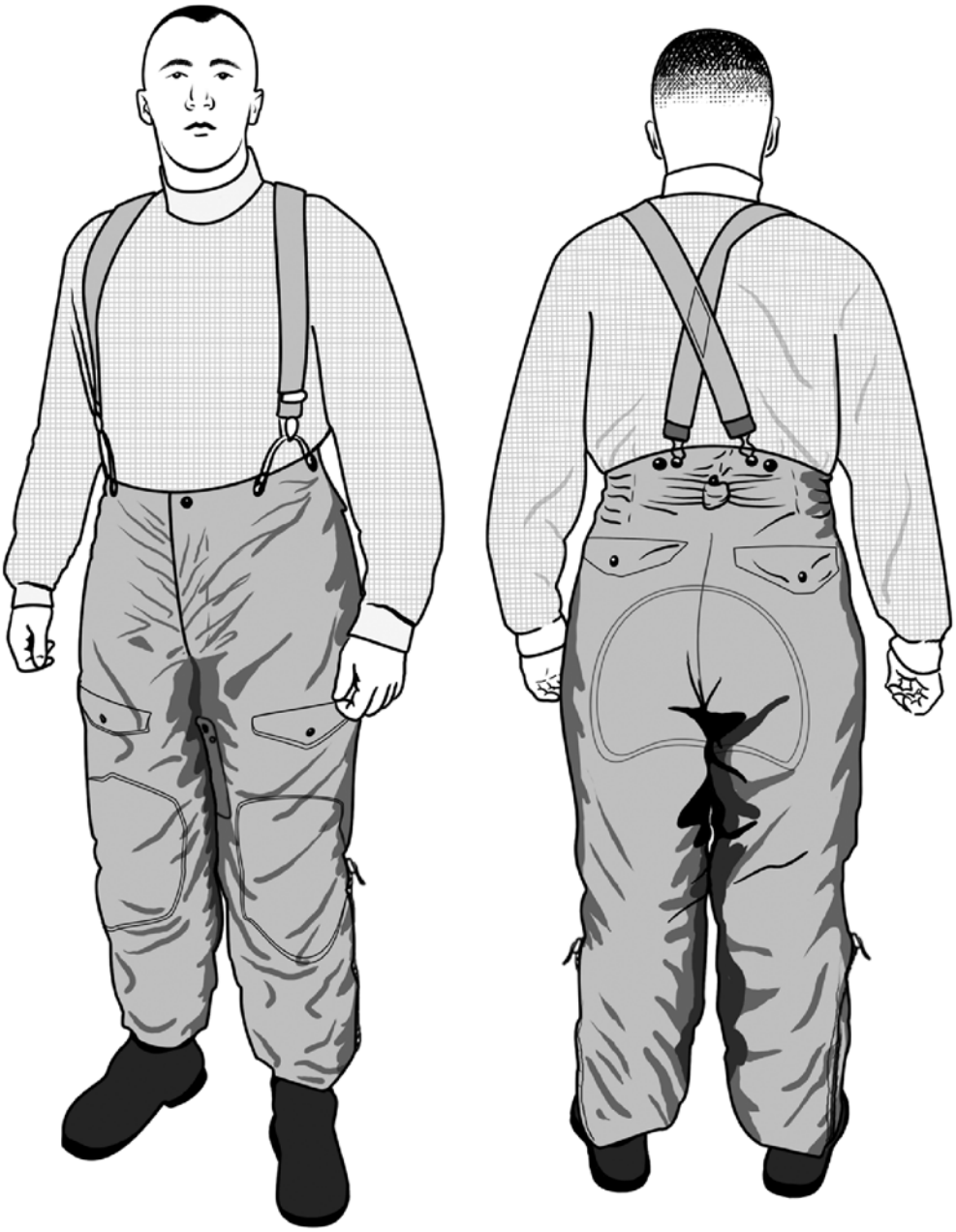

3-13

Figure 3-12. CWU-18/P Extreme Cold Weather Trousers

Section 3-9. Multi-Climate Protection System (MCPS)

3-161. GENERAL.

3-162. MCPS is composed of 13 pieces, which can be mixed and matched to form six different individual layers. The MCPS is a modular garment system, which can be worn in conjunction with current flight suits and aviation flight equipment in a broad range of climate conditions by adding or removing layers that provide flame resistance, moisture management, and thermal wind and water protection. Four different state of the art, flame resistant textiles were developed exclusively for use in the MCPS garments.

3-163. CONFIGURATION.

3-164. The MCPS consists of the components listed in Table 3-15 and are summarized below:

1. The Silkweight garment set (Figure 3-13) is a lightweight layer for times when a warmer layer is not needed or for layering under a thicker layer. The fabric is an aramid rashel knit that provides breathability, insulation and flame resistance. The shirt has a thumbhole in the cuff to allow the sleeve to be held in place when donning other layers overtop. It can also be used to keep the hand partially covered with the cuff for warmth. The shirt has an aramid mesh fabric on the bottom to reduce bulk when tucking it in. The drawer has a front fly and elastic waist. The elastic stirrup on the bottom of the leg is to aid in donning layers overtop and can be cut off by aircrew who do no like this feature.

Table 3-15. Platform Compatibility

MCP Component	Rotary Wing	Fixed Wing Non-Ejection Seat	Fixed Wing Ejection Seat
Silkweight Set (Replaces CWU-43 and CWU-44)	Yes	Yes	Yes
Midweight Set (Replaces CWU-43 and CWU-44)	Yes	Yes	Yes
Heavyweight Set (Replaces all anti-exposure coverall liners; CWU-23/P, CWU-72/P etc.)	Yes	No	No
Overall	Yes	Yes	No
Fleece Jacket/Vest	Yes	Yes	Yes
Outershell Jacket/Hood (Alone it replaces the CWU-36/P, when combined with the Fleece Jacket or Vest it replaces the CWU-45/P)	Yes	Yes	Yes
Outershell Trousers (Replaces the CWU-18/P Trousers)	Yes	No	No
Faceshield	Yes	No	No

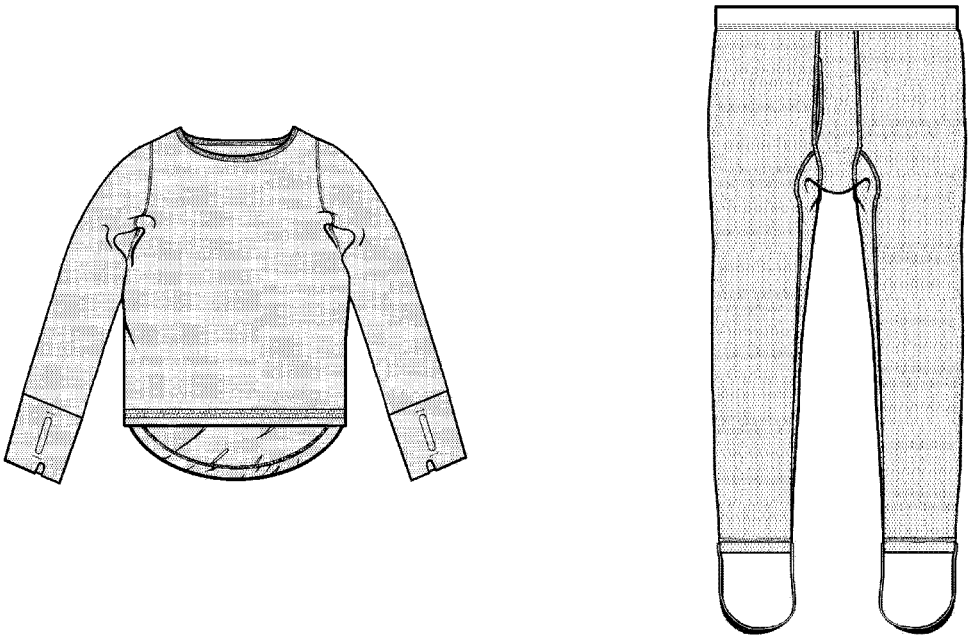

003042

Figure 3-13. Silkweight Shirt and Trouser

2. The midweight garment set (Figure 3-14) is a medium weight layer for use alone or for layering over and under other layers of the MCPS. The set is constructed of an aramid fleece engineered to provide flame protection in a garment that wicks and provides a comfortable fit. The aramid fleece is worn on the inside next to the skin and a polyester Lycra blend on the outside to provide a closer fit. The shirt has an aramid mesh cloth on the bottom to reduce bulk when tucking in. The drawer has a front fly and elastic waist. The elastic stirrup on the bottom of the leg is to aid in donning layers overtop and can be cut off by aircrew who do no like this feature.

3. The heavyweight garment set (Figure 3-15) will provide the level of protection required for in-water immersion when used with the anti-exposure coverall. The zip neck shirt is made of an aramid double velour with is modeled after the 200 weight polyester double velour available commercially. This layer can be worn alone or with the Silkweight and/or Midweight layers under a flight suit or an anti-exposure suit. Due to the knit structure of the fabric and the compressibility, it increases comfort and mobility when compared to currently fielded garments. The shirt has a Nomex mesh on the bottom to reduce bulk when tucking in. The liner pant has a front fly and elastic waist.

4. The overall (Figure 3-16) was developed to be worn over the flight suit and underneath the shell pant to provide insulation to aircrew on helicopters or in the back of patrol and cargo fixed wing aircraft who work in an environment with very little, if any, capability to provide heat. The design enables the overall to be put on while wearing boots, and has a suspender that adjusts with Velcro in order to avoid hardware that could press into the body and create a hot spot. Aircrews that wear a torso harness will not use this item. The overall is made from the same double weight velour as the heavyweight garments.

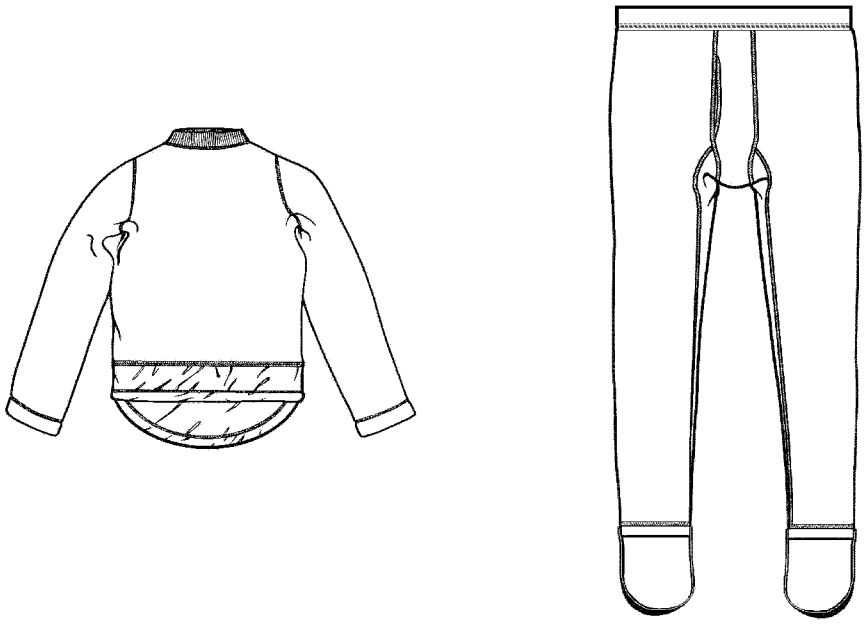

003043

Figure 3-14. Midweight Shirt and Trouser

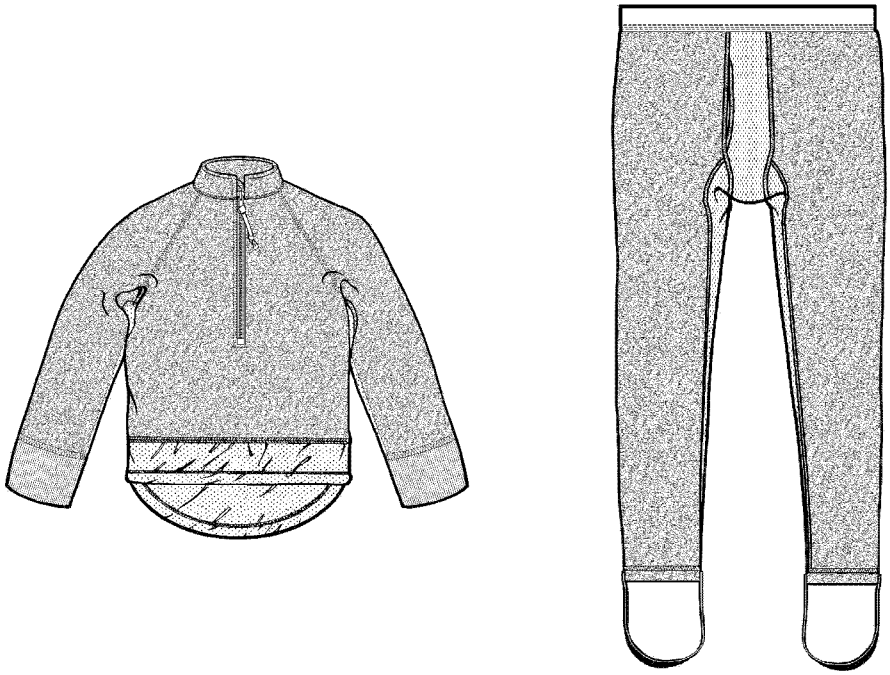

003044

Figure 3-15. Heavyweight Shirt and Trouser

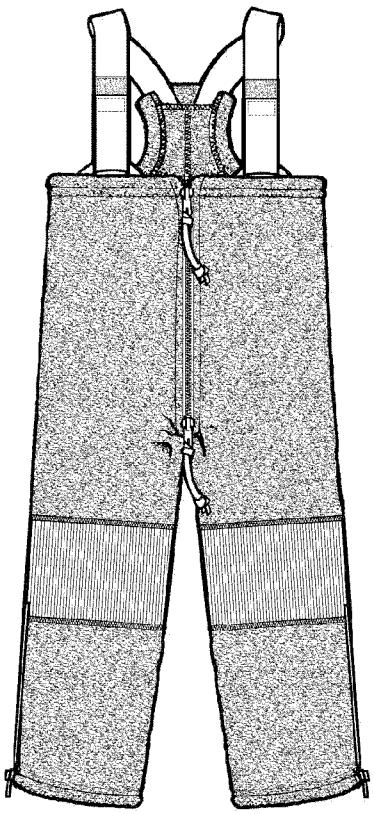

003045

Figure 3-16. Overall

5. The Fleece Jacket (Figure 3-17) and Vest (Figure 3-18) is designed to be worn over the Silkweight, midweight and/or heavyweight garments, alone or under the shell outer jacket on cold/wet days. The garments provide warmth without weight and blocks 95% of the wind while still providing outstanding breathability. The garments are water-repellent and shed rain and snow; dries quickly. The vest provides warmth to the body core on moderately cold days while still providing freedom of movement. The garments are constructed of an aramid 300 weight double fleece engineered to provide flame protection in a garment that wicks and provides comfort.

6. The Outershell Jacket/Hood (Figure 3-19) and Trousers (Figure 3-20) are a waterproof, windproof, and breathable flame-resistant Gortex™ Best Defense fabric, developed and manufactured for the MCPS. The outershell jacket can be used alone or over the other MCPS garments as layered protection. The jacket is designed to stay on the hip, has waterproof zippers, a "map" pocket on the upper left chest, hand warmer pockets behind the large front patch pockets, and the jacket has a survival hood which can be snapped onto the collar. The shell pant is made of the same fabric as the shell jacket. The pant can be put on while wearing boots and comes with suspenders to help keep them in place. The outershell trousers can be used alone or over the other MCPS components as layered protection.

7. The faceshield, (Figure 3-21) is a unisex pullover style garment designed for use in rotary wing aircraft only. The faceshield is a semi-form fit, soft, warm, wind-resistant, fire-resistant garment with a minimum of bulk. The faceshield can be worn under the helmet or as a stand-alone cold weather garment. The faceshield is constructed of aramid fleece, with a black stretch, velour panel insert at the back to help facilitate donning and doffing. The ear inserts are made of a mesh knit that provides a layer of protection while still allowing unimpeded hearing through the aircrewmember's helmet/cranial/headset without removing the faceshield. The left front has a slit in the fleece to facilitate the use of a boom microphone. The faceshield comes in 2 sizes (medium/large and extra-large) and can be worn up, covering the face, nose, mouth, chin, ears and neck, or in the down position covering the neck only. The faceshield was designed to be tucked under a shirt or jacket for full neck protection.

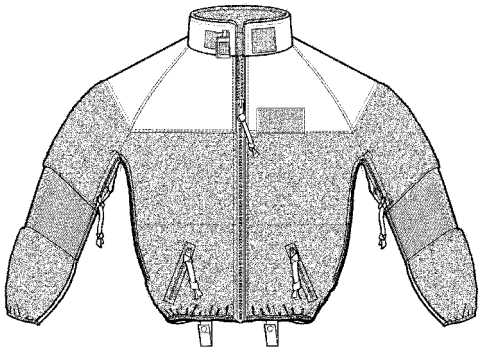

003046

Figure 3-17. Fleece Jacket

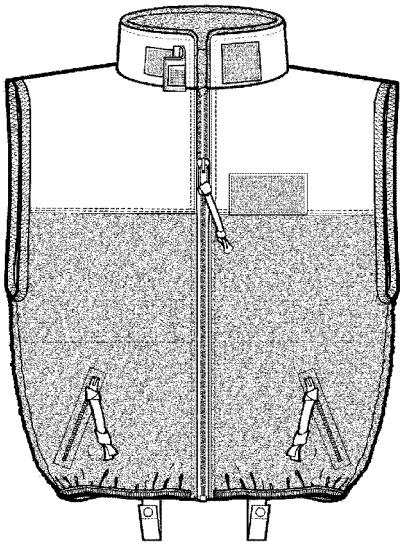

003047

Figure 3-18. Fleece Vest

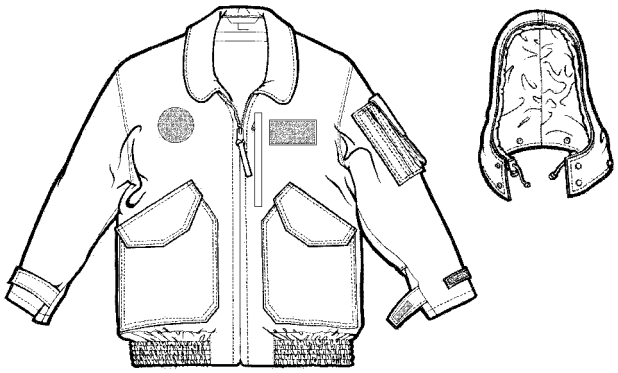

003048

Figure 3-19. Outershell Jacket and Hood

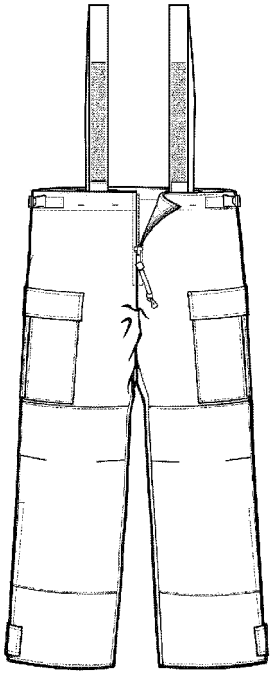

003049

Figure 3-20. Outershell Trouser

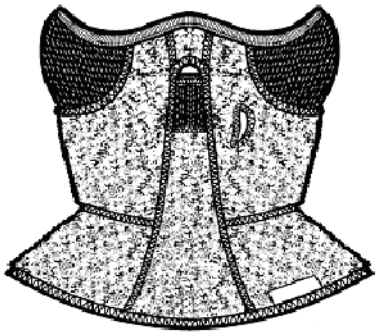

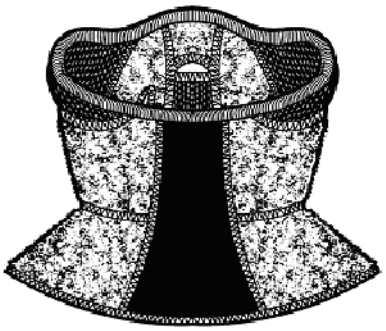

Figure 3-21. Faceshield

3-165. APPLICATION.

3-166. MCPS is designed to provide aircrew with the ability to select the garments they require based upon mission, aircraft and environment. Table 3-15 identifies the various components of the MCPS and the platform compatibility of the various pieces.

3-167. MODIFICATIONS.

3-168. Currently there are no modifications authorized for any of the MCPS garments.

3-169. SIZING/FITTING.

3-170. The MCPS components shall be properly sized to the aircrewmember using Table 3-16 through Table 3-19. When the garments are received, ensure a good fit by checking the following criteria:

1. Silk/Mid/Heavyweight Shirts:

a. Shoulder seam not stretched out or falling off shoulder.

b. No stress-wrinkles at armpit.

c. Can fit fingers between neckline and neck (heavyweight zipped up).

d. Sleeve covers wrist during arm reach. Silkweight sleeve must cover the wrist with thumb-cuff folded back.

e. About 3 inches of the hem stays tucked in during bend.

f. Smooth but not tight.

2. Silk/Mid/Heavyweight Trousers:

a. Does not prevent squatting, climbing.

b. Fly does not gape during squat.

c. Length when sitting covers ankle.

d. Seat is not stretched tight during squatting or climbing.

e. Waist comfortably snug but can stretch more.

f. Smooth but not tight overall.

g. Crotch seam is at or just below groin.

3. Overall:

a. Suspenders snug; not stretched out.

b. Seat is not stretched tight during squatting or climbing.

c. Bib between waist and chest.

d. Smooth overall appearance.

e. Fly does not strain during squat.

f. Crotch seam is at or just below groin.

4. Fleece Jacket/Vest and Outershell Jacket:

a. Shoulder seam not stretched out or falling off shoulder.

b. No stress-wrinkles at armpit (jacket only).

c. Sleeve covers wrist during arm reach (jacket only).

d. Can fit fingers between neckline and neck when zipped up.

e. Smooth but not tight in sleeve or body.

f. Hem not stretched tight.

g. Jacket hem rests at level of mid-seat.

5. Outershell Trousers:

a. Does not prevent squatting, climbing. Fly does not strain during squat or climb.

b. Length when sitting covers ankle.

c. Length with suspenders snugged covers ankle (sitting and standing).

d. Seat is not stretched tight during squatting or climbing.

e. Waist comfortably snug but can fit a flat hand between the waistband and the abdomen.

f. Smooth but not tight overall.

g. Crotch seam is at or just below groin.

6. Faceshield.

a. Fit according to helmet size. Aircrewmember's who wear medium and large helmets should order the medium/large faceshield. Aircrewmember's who wear an extra-large helmet should order an extra-large faceshield.

b. Faceshield shall fit snugly but not so snugly that it is constricting movement or is uncomfortable to the aircrewmember. Mesh ear inserts shall extend completely over the ear so that communications are not obstructed.

Table 3-16. Men's Shirt/Vest/Jacket Sizes

Size	Height in inches	Chest in inches	Part #	NIIN
Xsmall/short	<67	<34	TBD	8415-00-NSH-0766
Xsmall/ regular	67 - 72	<34	TBD	8415-00-NSH-0504
Xsmall/long	>72	<34	TBD	8415-00-NSH-0767
Small/short	<67	34 - 38	TBD	8415-00-NSH-0768
Small/ regular	67 - 72	34 - 38	TBD	8415-00-NSH-0505
Small/long	>72	34 - 38	TBD	8415-00-NSH-0769
Medium/ short	<67	>38 - 42	TBD	8415-00-NSH-0770
Medium/regular	67 - 72	>38 - 42	TBD	8415-00-NSH-0506
Medium/long	>72	>38 - 42	TBD	8415-00-NSH-0771
Large/short	<67	>42 - 46	TBD	8415-00-NSH-0772
Large/ regular	67 - 72	>42 - 46	TBD	8415-00-NSH-0507
Large/long	>72	>42 - 46	TBD	8415-00-NSH-0773
Xlarge/short	<67	>46 - 52	TBD	8415-00-NSH-0774
Xlarge/ regular	67 - 72	>46 - 52	TBD	8415-00-NSH-0508
Xlarge/long	>72	>46 - 52	TBD	8415-00-NSH-0775

Table 3-17. Men's Drawers/Overall Sizes

Size	Height in inches	Waist in inches	Part #	NIIN
Xsmall/short	<67	<28	TBD	8415-00-NSH-0776
Xsmall/regular	67 - 72	<28	TBD	8415-00-NSH-0509
Xsmall/long	>72	<28	TBD	8415-00-NSH-0777
Small/short	<67	28 - 32	TBD	8415-00-NSH-0778
Small/regular	67 - 72	28 - 32	TBD	8415-00-NSH-0510
Small/long	>72	28 - 32	TBD	8415-00-NSH-0779
Medium/short	<67	>32 - 36	TBD	8415-00-NSH-0780
Medium/regular	67 - 72	>32 - 36	TBD	8415-00-NSH-0511
Medium/long	>72	>32 - 36	TBD	8415-00-NSH-0781
Large/short	<67	>36 - 40	TBD	8415-00-NSH-0782
Large/regular	67 - 72	>36 - 40	TBD	8415-00-NSH-0512
Large/long	>72	>36 - 40	TBD	8415-00-NSH-0783
Xlarge/short	<67	>40 - 46	TBD	8415-00-NSH-0784
Xlarge/regular	67 - 72	>40 - 46	TBD	8415-00-NSH-0513
Xlarge/long	>72	>40 - 46	TBD	8415-00-NSH-0785

Table 3-18. Women's Shirt/Vest/Jacket Sizes

Size	Height in inches	Chest in inches	Part #	NIIN
Xsmall/short	<64	<33	TBD	8415-00-NSH-0786
Xsmall/regular	64 - 68	<33	TBD	8415-00-NSH-0787
Xsmall/long	>68	<33	TBD	8415-00-NSH-0788
Small/short	<64	33 - 35	TBD	8415-00-NSH-0789
Small/regular	64 - 68	33 - 35	TBD	8415-00-NSH-0790
Small/long	>68	33 - 35	TBD	8415-00-NSH-0791
Medium/short	<64	>35 - 37	TBD	8415-00-NSH-0792
Medium/regular	64 - 68	>35 - 37	TBD	8415-00-NSH-0793
Medium/long	>68	>35 - 37	TBD	8415-00-NSH-0794
Large/short	<64	>37 - 39	TBD	8415-00-NSH-0795
Large/regular	64 - 68	>37 - 39	TBD	8415-00-NSH-0796
Large/long	>68	>37 - 39	TBD	8415-00-NSH-0797
Xlarge/short	<64	>39 - 43	TBD	8415-00-NSH-0798
Xlarge/regular	64 - 68	>39 - 43	TBD	8415-00-NSH-0799
Xlarge/long	>68	>39 - 43	TBD	8415-00-NSH-0800

Table 3-19. Women's Drawers/Overall Sizes

Size	Height in inches	Waist in inches	Part #	NIIN
Xsmall/short	<64	<25	TBD	8415-00-NSH-0801
Xsmall/regular	64 - 68	<25	TBD	8415-00-NSH-0802
Xsmall/long	>68	<25	TBD	8415-00-NSH-0803
Small/short	<64	25 - 27	TBD	8415-00-NSH-0804
Small/regular	64 - 68	25 - 27	TBD	8415-00-NSH-0805
Small/long	>68	25 - 27	TBD	8415-00-NSH-0806
Medium/short	<64	>27 - 29	TBD	8415-00-NSH-0807
Medium/ regular	64 - 68	>27 - 29	TBD	8415-00-NSH-0808
Medium/long	>68	>27 - 29	TBD	8415-00-NSH-0809
Large/short	<64	>29 - 31	TBD	8415-00-NSH-0810
Large/regular	64 - 68	>29 - 31	TBD	8415-00-NSH-0811
Large/long	>68	>29 - 31	TBD	8415-00-NSH-0812
Xlarge/short	<64	>31 - 35	TBD	8415-00-NSH-0813
Xlarge/regular	64 - 68	>31 - 35	TBD	8415-00-NSH-0814
Xlarge/long	>68	>31 - 35	TBD	8415-00-NSH-0815

3-171. MAINTENANCE.

3-172. The aircrewmember's responsibility for maintenance of the MCPS garments is limited to Preflight/Postflight Inspection and cleaning. Repairs or other maintenance actions required shall be performed by organizational level or above. All maintenance actions and inspections shall be documented in accordance with COMNAVAIRFORINST 4790.2.

3-173. INSPECTION. MCPS inspections consist of Place-In-Service, Preflight/Postflight, Special, and Visual Inspections.

3-174. PLACE-IN-SERVICE INSPECTION. The Place-In-Service Inspection is performed prior to issuing the MCPS garments. To conduct the Place-In-Service Inspection proceed as follows:

1. Fit assembly to aircrewmember using sizing procedures outlined in paragraph 3-169.

2. Perform Visual Inspection in accordance with paragraph 3-177.

3. Document Place-In-Service Inspection in accordance with COMNAVAIRFORINST 4790.2.

3-175. PREFLIGHT/POSTFLIGHT INSPECTION. The aircrewmember is responsible for Preflight/Postflight Inspection. Preflight/Postflight Inspection consists of a visual inspection for condition of the garments. Inspect in accordance with paragraph 3-177.

3-176. 360-DAY SPECIAL INSPECTION. The Special Inspection shall be performed by organizational level or above upon issue prior to placing in service and every 360 days thereafter as follows:

1. Perform Visual Inspection in accordance with paragraph 3-177.

2. Repair in accordance with paragraph 3-179.

3. Document Special Inspection in accordance with COMNAVAIRFORINST 4790.2.

3-177. VISUAL INSPECTION. To perform a Visual Inspection of the MCPS, proceed as follows:

1. Inspect all fabric for cuts, tears and abrasions.

2. Inspect stitching for holes, snags, loose or broken stitching.

3. Inspect snaps, buttons, hook and pile fastener tape for secure attachment.

4. Inspect slide fasteners for damage, security and ease of operation. Inspect thong pulls for presence and security of attachment.

5. Inspect elastic on attachment loops, suspenders, waistbands, stirrups etc. for damage and security.

6. Inspect buckles for presence and security of attachment.

7. Inspection plastic barrel locks and draw cord in hood for presence and condition.

8. Inspect outershell garment seam tape for security and fabric for punctures, rips or tears.

9. Repair in accordance with paragraph 3-179. If needed repairs go beyond the scope of repairs authorized in paragraph 3-179, replace garment.

10. Document inspection in accordance with COMNAVAIRFORINST 4790.2.

3-178. CLEANING. Aircrewmembers are responsible for cleaning their own MCPS garments. However, it is incumbent upon the aircrew survival equipmentmen to ensure that aircrewmembers are aware of the cleaning procedures that come with each of the garments. If the cleaning instructions are not followed, then the flame resistant quality of the garments will not last. It is suggested that aircrew survival equipmentmen copy these instructions and hand them to the aircrewmember upon issue of the garments. To clean the garments, proceed as follows:

NOTE

When using cold water, ensure that cold-water compatible laundry detergent is used. Aboard ship, it is Ship's Laundry Formula 3 laundry detergent.

1. Silkweight: Machine or hand wash, cold. Line dry. Do not tumble dry. Do not use bleach or fabric softener. Do not iron. Do not dry clean.

2. Midweight: Machine or hand wash, cold. Line dry. Do not tumble dry. Do not use bleach or fabric softener. Do not iron. Do not dry clean.

3. Heavyweight: Machine wash, warm. Tumble dry, low. Do not use bleach or fabric softener. Do not iron. Do not dry clean.

4. Overall: Machine wash, warm. Tumble dry, low. Do not use bleach or fabric softener. Do not iron. Do not dry clean.

5. Fleece Jacket and Vest: Machine wash, warm. Tumble dry, low. Do not use bleach or fabric softener. Do not iron. Do not dry clean.

6. Outershell Jacket and Trousers: Machine wash, warm. Rinse thoroughly. Tumble dry, warm. Do not use bleach or fabric softener. Do not dry clean. Steam Iron, warm. Do not puncture fabric. See paragraph 5-60 for waterproofing restoration treatment.

7. Facepiece: Machine or hand wash, cold. Line dry. Do not tumble dry. Do not use bleach or fabric softener. Do not iron. Do not dry clean.

3-179. REPAIRS. Repair of the MCPS garments shall consist of mending small holes and tears, re-stitching seams, replacement of elastic, hook/pile fastener tape, snaps, buttons and seam tape repair/replacement etc. Most repairs shall be performed by organizational level but the repair/replacement of the seam tape on the outershell garments must be accomplished at I-Level.

Materials Required

Quantity	Description	Reference Number
As Required	Thread, Nylon, Black	V-T-295, NIIN 00-515-3367 or equivalent
As Required	Thread, Nylon, Sage Green	V-T-295, NIIN 00-204-3884 or equivalent
As Required	Elastic, Stirrup, 3/4 inch, Black	MIL-W-5664 NIIN 00-432-8179 or equivalent
As Required	Elastic, Waistband, 1 inch, Black	MIL-W-5664 NIIN 00-263-3600 or equivalent
As Required	Hook Tape, 2 inch, Green	A-A-55126 NIIN 00-405-2267 or equivalent
As Required	Pile Tape, 2 inch, Green	A-A-55126 NIIN 00-926-4930 or equivalent
As Required	Webbing, Pull Tab, Olive Drab	MIL-W-5664 NIIN 00-260-6909 or equivalent
As Required	Webbing, Nylon, Type IV, Green	MIL-T-5038 NIIN 00-655-5123 or equivalent
As Required	Snap Fastener, Cap	MS27983-1 NIIN 00-891-9073 or equivalent
As Required	Snap Fastener, Socket	MS27982-2N NIIN 00-276-4970 or equivalent
As Required	Snap Fastener, Stud	AN277-64B NIIN 00-276-4908 or equivalent
As Required	Snap Fastener, Post	AN277-9B NIIN 00-276-4978 or equivalent
As Required	Cloth, Aramid, Flightsuit Material	MIL-C-83429 NIIN 01-147-2064 (Note 1)
As Required	Abrasion Cloth G, Jacket/Vest	Salvaged from old garments
As Required	Gortex Material	Salvaged from old garments
As Required	Mesh Deer Creek B, Silkweight and all Skirting	Salvaged from old garments
As Required	Powerstretch Fleece B, Mid-weight Fabric	Salvaged from old garments
As Required	Raschel Knit G, Overall, Fleece Jacket	Salvaged from old garments
As Required	Velour 200 B, Heavyweight	Salvaged from old garments
As Required	Windpro “G” Fleece, Jacket/ Vest	Salvaged from old garments

Notes: 1. NIIN 01-147-2064 has been discontinued without replacement in the supply system. NAVAIR Clothing Team has plentiful supply on hand and can distribute in 5 yard increments to any fleet activities who need it. Please contact member of the Personal Protective Clothing Team to request material. Team Members are listed on the PMA202 website.

NOTE

Salvaging old MCPS garments. The components of the MCPS are fabricated from very specialized fire resistant textiles that are not stocked in the supply system nor are they available on the open market. The garments can be patched with flight suit material but the best practice is for aircrew survival equipmentmen to salvage old MCPS garments (if they must be turned in for replacement, salvage parts of the garments to use for patches (e.g. a sleeve, buckles, mesh material, zippers) and save them to use as patching material and replacement parts.

1. Repair the outershell garments seam tape in accordance with paragraph 5-72 (I-Level).

2. Repair tears/rips/holes etc in the fabric of the outershell garments in accordance with paragraphs 5-68 through 5-71 (I-Level).

3. All repairs; rips, tears, and holes in fabric, missing or loose hook and pile fastener tape etc. shall be accomplished using standard sewing techniques.

4. Document all repairs in accordance with COMNAVAIRFORINST 4790.2 Series.

Section 3-10. CWU-23/P Liner

3-180. GENERAL.

3-181. The CWU-23/P liner (Figure 3-22) is a one-piece garment supplied in 12 sizes that is designed to be worn directly under the CWU-62/P series coverall (or current authorized equivalent) and over the recommended underclothing (Table 5-2).

3-182. CONFIGURATION.

3-183. The CWU-23/P liner is constructed of a layer of 100% cotton and an outer layer of polypropylene netting. Each sleeve ending has a coated stretch fabric insert to permit easy insertion of the hands and to reduce bulk. The leg endings are short enough to clear the tops of flight boots, thereby eliminating bulk, and are notched at the front to allow standard wool or cotton socks to be pulled up over liner legs and hold liner legs in place when the CWU-62/P coverall (or current authorized equivalent) is donned.

3-184. APPLICATION.

3-185. The CWU-23/P liner is designed for use by all authorized aircrewmembers. The CWU-23/P liner shall be worn by aircrewmembers as part of an anti-exposure assembly for flight operations in accordance with the climatic and operational requirements established by the NATOPS General Flight and Operational Instructions Manual OPNAVINST 3710.7 (Series).

3-186. FITTING.

3-187. The CWU-23/P liner shall be properly sized to the aircrewmember based on the height, weight, and chest measurements shown in Table 3-20. Determine chest circumference for the CWU-23/P liner by taking a tape measurement at nipple height with the aircrewmember wearing a single layer of the underclothing that will be worn under the liner.

3-188. MODIFICATIONS.

3-189. There are no current directives affecting this equipment at this time.

3-190. MAINTENANCE.

3-191. The aircrewmember is responsible for pre/post-flight inspection and cleaning. Repairs or other maintenance actions required shall be performed by organizational level or above. All maintenance actions, inspections and repairs shall be recorded in accordance with COMNAVAIRFORINST 4790.2.

3-192. INSPECTION.

3-193. The CWU-23/P liner shall be subjected to a Place-In-Service Inspection, a Preflight/Postflight Inspection, and a 360-Day Special Inspection.

3-194. PLACE-IN-SERVICE INSPECTION. The liner shall be inspected prior to Place-In-Service. To conduct the Place-In-Service Inspection proceed as follows:

1. Fit assembly to aircrewmember using fitting procedures outlined in paragraph 3-186.

2. Perform visual inspection in accordance with paragraph 3-196.

3. Annotate aircrewmember's identification BUNO on the tag of the CWU-23/P liner being careful not to cover identifying data for the liners (such as NIIN).

4. Document Place-In-Service Inspection in accordance with COMNAVAIRFORINST 4790.2.

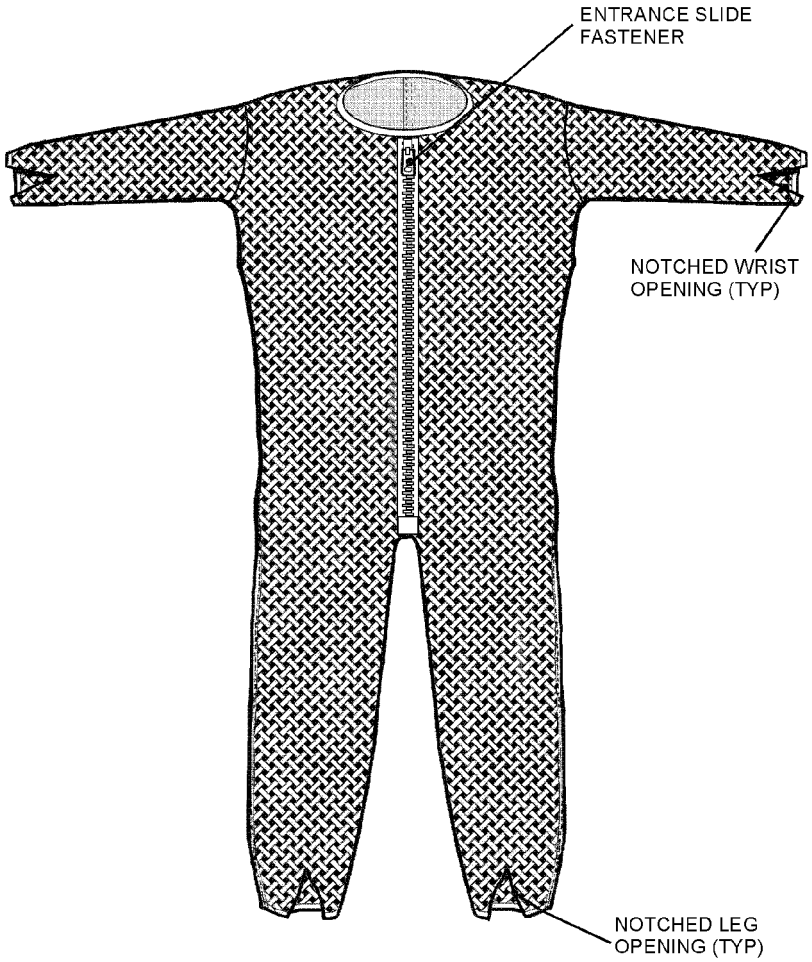

Figure 3-22. CWU-23/P Liner

Table 3-20. Sizing Guide (CWU-23/P Liner)

Height (inches)	Weight (pounds)	Chest Circumference (inches)	NIIN	Size
63 - 66	125 - 149	32 - 36	00-123-9125	1 - (Small Short)
66 - 69	125 - 149	32 - 36	00-123-9126	2 - (Small Regular)
69 - 72	125 - 149	32 - 36	00-123-9127	3 - (Small Long)
65 - 67	150 - 174	37 - 40	00-123-9128	4 - (Medium Short)
67 - 70	150 - 174	37 - 40	00-123-9129	5 - (Medium Regular)
70 - 73	150 - 174	41 - 44	00-123-9130	6 - (Medium Long)
66 - 69	175 - 199	41 - 44	00-123-9131	7 - (Large Short)
69 - 72	175 - 199	41 - 44	00-123-9113	8 - (Large Regular)
72 - 75	175 - 199	45 - 47	00-123-9114	9 - (Large Long)
67 - 70	200 - 224	45 - 47	00-123-9115	10 - (Extra Large Short)
70 - 73	200 - 224	45 - 47	00-123-9116	11 - (Extra Large Regular)
73 - 76	200 - 224	45 - 47	00-123-9121	12 - (Extra Large Long)

3-195. PREFLIGHT/POSTFLIGHT INSPECTION. The aircrewmember is responsible for Preflight/Postflight Inspection. Preflight/Postflight Inspection consists of a visual inspection for condition of the CWU-23/P liner. Inspect in accordance with paragraph 3-196.

3-196. 360-DAY SPECIAL INSPECTION. The Special Inspection shall be performed by organizational level or above upon issue prior to placing in service, and every 360 days thereafter. To conduct the 360-Day Special Inspection proceed as follows:

1. Inspect liner materials for cuts, tears, abrasions and deterioration. Inspect seams for loose or broken stitching.

2. Inspect slide fastener for corrosion and proper operation.

3. If repairs are necessary, repair in accordance with paragraph 3-198.

4. Inspect liner to insure that it is a Navy authorized liners with proper identification, e.g. NIIN, Contract Number, Part Number etc. Liners that have been open purchased from commercial establishments may not have the proper flame resistance and are not authorized.

5. Document inspection in accordance with COMNAVAIRFORINST 4790.2.

3-197. CLEANING. To clean the CWU-23/P liner, proceed as follows:

Materials Required

Quantity	Description	Reference Number
As Required	Detergent, Cold Water	Commercial

CAUTION

Do not dry-clean liner. Do not use bleaches, starches or other additives.

1. Hand launder or use an automatic washer that has a delicate cycle. Ensure that water used is lukewarm to cold. Use 3/4 ounce of detergent to each gallon of water. Wash cycle shall not exceed 3 minutes.

2. Rinse liner three times. Use clean, fresh water for each rinse. Each rinse cycle shall be a minimum of 1 minute.

CAUTION

Squeezing, wringing or spin-drying the liner is prohibited.

3. Hang liner by shoulders on a wooden or plastic hanger, and allow to drip-dry.

3-198. REPAIRS. Repairs shall be limited to mending small tears and holes (paragraph 5-116) and restitching of partially opened seams. Repair of the slide fasteners shall be limited to minor actions such as reattaching loose slide fastener tape to the coverall fabric and replacement of pull tab. Replacement of the slide fastener shall be at the discretion of the repairing maintenance activity in accordance with standard sewing techniques with locally procured slide fasteners. Replacement of the cuffs shall be accomplished in accordance with paragraph 3-199.

3-199. Replacement of CWU-23/P Sleeve Insert. To replace a stretched or damaged sleeve insert, proceed as follows:

NOTE

Some activities are receiving the CWU-23/P with a knit cuff installed from the manufacturer. The CWU-23/P liner is an Air Force managed item and they have changed the cuff. The CWU-23/P with the knit cuff is authorized for use, however, when replacing the cuff the procedures outlined below utilizing coated cloth will be used because the knit cuffs do not come pre-manufactured and PR shops do not have the ability to bind the edges of the knit fabric as required.

Materials Required

Quantity	Description	Reference Number
4 1/2 Inches x 5 Inches	Cloth, Coated -or- Cloth, Coated	MIL-C-83398 NIIN 01-020-1522 NIIN 00-045-8112
As Required	Thread, Nylon Type II, Size E Sage Green	V-T-295 NIIN 00-204-3884

1. Carefully remove damaged panel by removing stitching.

2. Cut new panel.

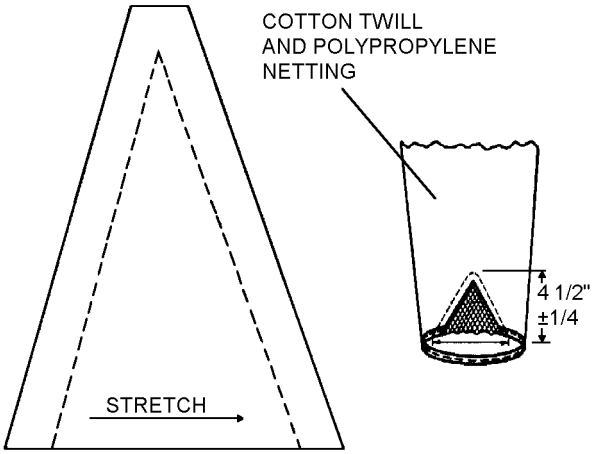

3p250qs2

Step 2 - Para 3-199

3. Place panel in original panel position. Attach using an LSq-2 seam.

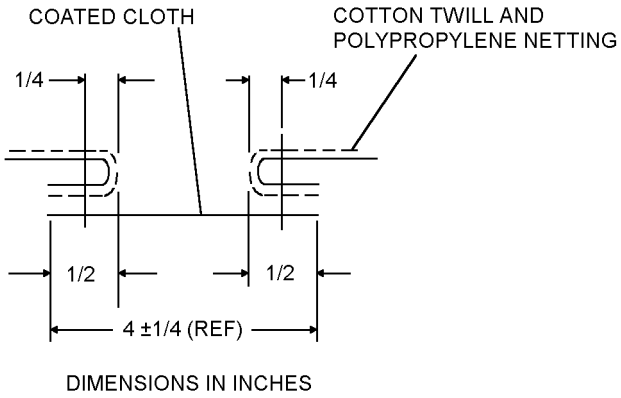

3p250qs3

Step 3 - Para 3-199

3-200. STORAGE.

3-201. CWU-23/P liners shall be stored as part of the anti-exposure coverall assembly in accordance with paragraph 5-61.

Section 3-11. CWU-72/P Liner

3-202. GENERAL.

3-203. The CWU-72/P liner (Figure 3-23) is a one-piece garment supplied in nine sizes (Table 3-21) that provides a layer of thermal protection. The liner is not authorized for wear without the CWU-62/P Series coverall (or current authorized equivalent) and shall be worn directly under the CWU-62/P Series coverall (or current authorized equivalent) and over the recommended underclothing (Table 5-2).

3-204. CONFIGURATION.

3-205. The CWU-72/P liner is constructed of 100% olefin microfiber thermal insulation sandwiched between two layers of high temperature resistant aramid fabric.

3-206. APPLICATION.

3-207. The CWU-72/P liners are designed for use by all authorized aircrewmembers. The CWU-72/P liner shall be worn by aircrewmembers as part of an anti-exposure assembly for flight operations in accordance with the climatic and operational requirements established by the NATOPS General Flight and Operational Instructions Manual OPNAVINST 3710.7 (Series).

3-208. FITTING.

3-209. The CWU-72/P liner shall be properly sized to the aircrewmember based on the height, weight, and chest measurements shown in Table 3-21. Determine chest circumference for the CWU-72/P liner by taking a tape measurement at nipple height with the aircrewmember wearing a single layer of the underclothing that will be worn under the liner.

3-210. MODIFICATIONS.

3-211. There are no current directives affecting this equipment at this time.

3-212. MAINTENANCE.

3-213. The aircrewmember is responsible for pre/post-flight inspection and cleaning. Repairs or other maintenance actions required shall be performed by organizational level or above. All maintenance actions, inspections and repairs shall be recorded in accordance with COMNAVAIRFORINST 4790.2.

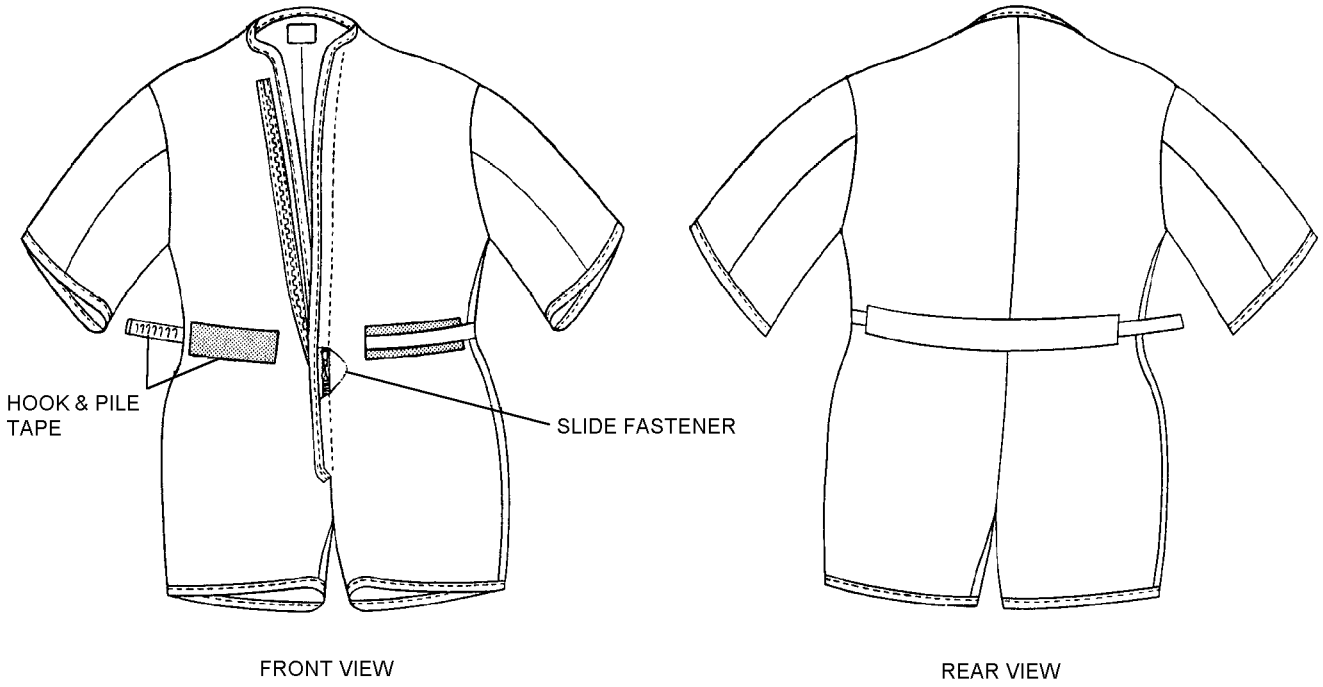

003034b

Figure 3-23. CWU-72/P Liner

Table 3-21. Sizing Guide (CWU-72/P Liner)

Height (inches)	Weight (pounds)	Maximum Chest Circumference (inches)	NIIN	Size
63 - 65	120 - 135	35	01-204-2638	Extra Small
66 - 69	135 - 155	40	01-204-9145	Small Regular
68 - 70	135 - 155	39	01-237-7846	Small Long
69 - 71	155 - 175	42	01-216-4259	Medium Regular
71 - 74	155 - 175	40	01-237-7847	Medium Long
70 - 73	170 - 190	46	01-204-2639	Large Regular
72 - 75	170 - 190	45	01-237-7848	Large Long
71 - 74	190 and up	47	01-204-2640	Extra Large Regular
75 - 77	190 and up	45 1/2	01-237-7849	Extra Large Long

3-214. INSPECTION.

3-215. The CWU-72/P liner shall be subjected to a Place-In-Service Inspection, a Preflight/Postflight Inspection, and a 360-Day Special Inspection.

3-216. PLACE-IN-SERVICE INSPECTION. The liner shall be inspected prior to Place-In-Service. To conduct the Place-In-Service Inspection proceed as follows:

1. Fit assembly to aircrewmember using fitting procedures outlined in paragraph 3-208.

2. Perform visual inspection in accordance with paragraph 3-218.

3. Annotate aircrewmember's identification BUNO on the tag of the CWU-72/P liner being careful not to cover identifying data for the liner (such as NIIN).

4. Document Place-In-Service Inspection in accordance with COMNAVAIRFORINST 4790.2.

3-217. PREFLIGHT/POSTFLIGHT INSPECTION. The aircrewmember is responsible for Preflight/Postflight Inspection. Preflight/Postflight Inspection consists of a visual inspection for condition of the CWU-72/P liner. Inspect in accordance with paragraph 3-218.

3-218. 360-DAY SPECIAL INSPECTION. The Special Inspection shall be performed by organizational level or above upon issue prior to placing in service, and every 360 days thereafter. To conduct the 360-Day Special Inspection proceed as follows:

1. Inspect liner materials for cuts, tears, abrasions and deterioration. Inspect seams for loose or broken stitching.

2. Inspect slide fastener for corrosion and proper operation.

3. Inspect hook and pile tape for damage or broken stitching.

4. If repairs are necessary, repair in accordance with paragraph 3-220.

5. Inspect CWU-72P liner to insure that it is a Navy authorized liners with proper identification, e.g. NIIN, Contract Number, Part Number etc. Liners that have been open purchased from commercial establishments may not have the proper flame resistance and are not authorized.

6. Document inspection in accordance with COMNAVAIRFORINST 4790.2.

3-219. CLEANING. To clean the CWU-72/P liner, proceed as follows:

Materials Required

Quantity	Description	Reference Number
As Required	Detergent, Cold Water	Commercial

CAUTION

Do not dry-clean liner. Do not use fabric softener, bleaches, starch, soap or other additives. Do not iron. Do not launder in hot temperatures and do not tumble dry.

1. Engage all hook and pile fasteners.

2. Launder in automatic washer or hand launder in warm water.

3. Drip dry on wooden or plastic hanger or tumble dry at low temperature on gentle cycle.

3-220. REPAIRS. Repairs shall be limited to mending small tears and holes, restitching of partially opened seams and replacement of hook and pile tape. To repair the CWU-72/P liner, proceed as follows:

Materials Required

Quantity	Description	Reference Number
As Required	Thread, Aramid, Spun Staple, Natural Color	MIL-T-83193 NIIN 01-225-4672
As Required	Cloth, Pajama Check Weave, or Plain Weave, Aramid, Natural Color	MIL-C-43774 NIIN 01-225-9231
As Required	Fastener Tape, Hook, Type II, Class 1, 1-Inch Wide, White	MIL-F-21840 NIIN 01-117-0508
As Required	Fastener Tape, Pile, Class 1, 2-Inch Wide	MIL-F-21840 NIIN 01-107-8352

1. Loose or broken stitching shall be repaired by restitching using type 301 lockstitch, 8 to 10 stitches per inch, with minimum 1-inch back or overstitch.

2. Small holes and tears, up to 1/2 inch in length or diameter, may be mended and/or darned on a sewing machine. To repair holes or tears larger than 1/2 inch in length or diameter, use patches. To patch, cut 2 pieces of aramid cloth at least 1 inch larger than the damaged area in all directions. Turn the edges of one patch under 1/4 inch, center the patch on the inside of the liner over the damaged area and sew the patch 1/8 inch from the folded edge. Turn the edges of the second patch under 1/4 inch, center the patch on the outside of the liner over the damaged area and stitch through all thicknesses, 1/16 to 1/8 from the folded edge.

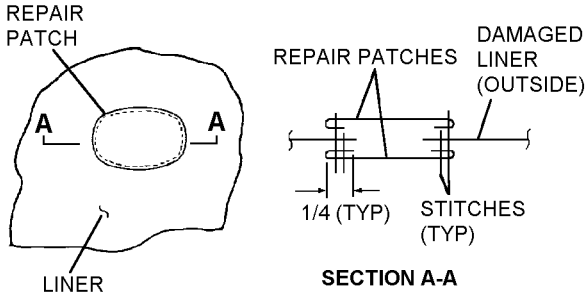

3p250ag2

Step 2 - Para 3-220

3. Damaged hook and pile fastener tape shall be replaced with the same type and length of tape, and in the same manner and location as originally installed. Pile tape may be replaced by stitching through all layers of the liner.

3-221. STORAGE.

3-222. CWU-72/P liners shall be stored as part of the anti-exposure coverall assembly in accordance with paragraph 5-61.

Section 3-12. CWU-81/P and CWU-82/P Liners

3-223. GENERAL.

3-224. The CWU-81/P and CWU-82/P liners (Figure 3-24) are two piece garments supplied in nine sizes each (Table 3-22 and Table 3-23) that provide a layer of thermal protection. The CWU-81/P liner is a shirt and the CWU-82/P liner are drawers. The liners are not authorized for wear without the CWU-62/P Series coverall (or current authorized equivalent) and shall be worn directly under the CWU-62/P Series coverall (or current authorized equivalent) and over the recommended underclothing (Table 5-2).

3-225. CONFIGURATION.

3-226. The CWU-81/P and CWU-82/P liners are constructed of 100% olefin microfiber thermal insulation sandwiched between two layers of high temperature resistant aramid fabric.

3-227. APPLICATION.

3-228. The CWU-81/P and CWU-82/P liners are designed for use by authorized female aircrewmembers only. The CWU-81/P and CWU-82/P liners shall be worn as part of an anti-exposure assembly for flight operations in accordance with the climatic and operational requirements established by the NATOPS General Flight and Operational Instructions Manual OPNAVINST 3710.7 (Series).

3-229. FITTING.

3-230. The CWU-81/P and CWU-82/P liners shall be properly sized to the woman aircrewmember based on the height, chest and hip measurements shown in Table 3-22 and Table 3-23. Determine chest and hip circumference for the CWU-81/P and CWU-82/P liners by using chapter 10 for guidance and with aircrewmember wearing a single layer of the underclothing that will be worn under the liner.

3-231. MODIFICATIONS.

3-232. There are no current directives affecting this equipment at this time.

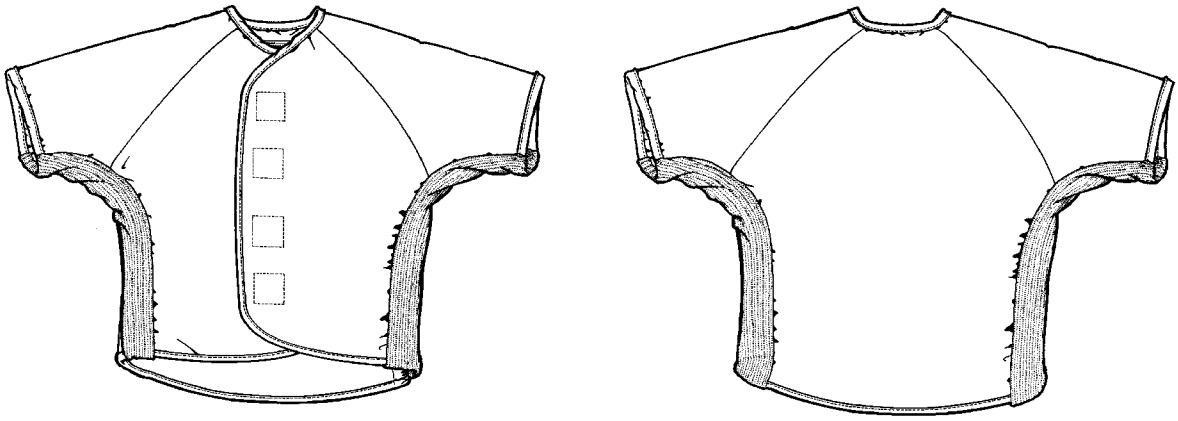

FRONT BACK

CWU-81/P LINER (SHIRT)

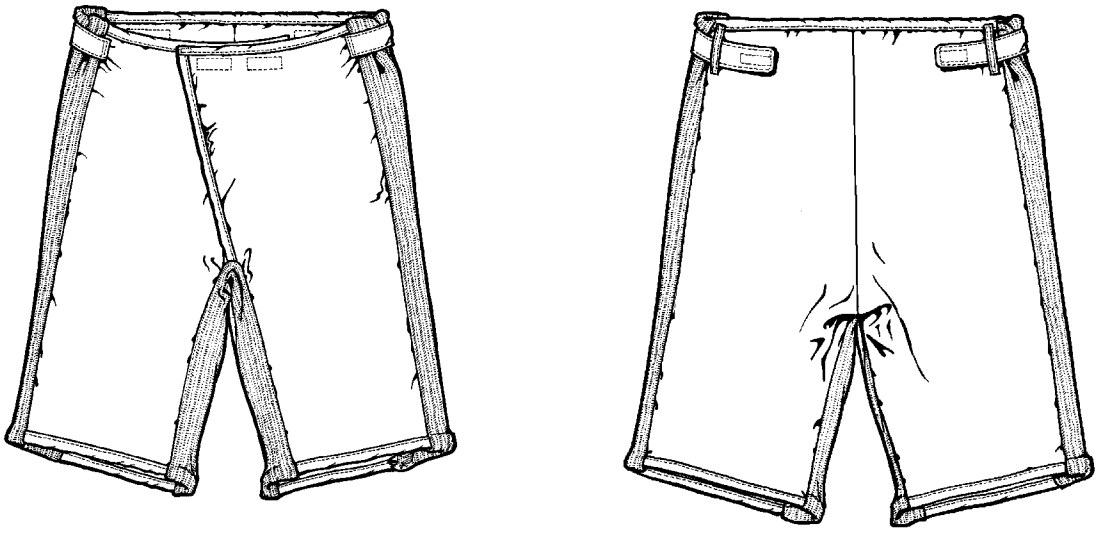

FRONT BACK

CWU-82/P LINER (DRAWERS)

003034c

Figure 3-24. CWU-81/P and CWU-82/P Liners

Table 3-22. Sizing Guide (CWU-81/P Liner, Shirt (Women Only))

Height (inches)	Chest Size (inches)	NIIN	Size
less than 63	less than 35	01-480-5251	XSmall/XShort
63 - 67	less than 35	01-480-5253	XSmall/Short
more than 67	less than 35	01-480-5252	XSmall/Regular
less than 63	35 - 39	01-480-5254	Small/XShort
63 - 67	35 - 39	01-480-5256	Small/Short
more than 67	35 - 39	01-480-5257	Small/Regular
less than 63	more than 39	01-480-5258	Medium/XShort
63 - 67	more than 39	01-480-5259	Medium/Short
more than 67	more than 39	01-480-5260	Medium/Regular

Table 3-23. Sizing Guide (CWU-82/P Liner, Drawers (Women Only))

Height (inches)	Hip Size (inches)	NIIN	Size
less than 63	less than 37	01-480-5261	XSmall/XShort
63 - 67	less than 37	01-480-5262	XSmall/Short
more than 67	less than 37	01-480-5263	XSmall/Regular
less than 63	37 - 41	01-480-5265	Small/XShort
63 - 67	37 - 41	01-480-5264	Small/Short
more than 67	37 - 41	01-480-5266	Small/Regular
less than 63	more than 41	01-480-5267	Medium/XShort
63 - 67	more than 41	01-480-5268	Medium/Short
more than 67	more than 41	01-480-5270	Medium/Regular

3-233. MAINTENANCE.

3-234. The aircrewmember is responsible for pre/post-flight inspection and cleaning. Repairs or other maintenance actions required shall be performed by organizational level or above. All maintenance actions, inspections and repairs shall be recorded in accordance with COMNAVAIRFORINST 4790.2.

3-235. INSPECTION.

3-236. The CWU-81/P and CWU-82/P liners shall be subjected to a Place-In-Service Inspection, a Preflight/Postflight Inspection, and a 360-Day Special Inspection.

3-237. PLACE-IN-SERVICE INSPECTION. The CWU-81/P and CWU-82/P liners shall be inspected prior to Place-In-Service. To conduct the Place-In-Service Inspection proceed as follows:

1. Fit assembly to aircrewmember using fitting procedures outlined in paragraph 3-229.

2. Perform visual inspection in accordance with paragraph 3-239.

3. Annotate aircrewmember's identification BUNO on the tag of the CWU-81/P and CWU-82/P liners being careful not to cover identifying data for the liners (such as NIIN).

4. Document Place-In-Service Inspection in accordance with COMNAVAIRFORINST 4790.2.

3-238. PREFLIGHT/POSTFLIGHT INSPECTION. The aircrewmember is responsible for Preflight/Postflight Inspection. Preflight/Postflight Inspection consists of a visual inspection for condition of the CWU-81/P and CWU-82/P liners. Inspect in accordance with paragraph 3-239.

3-239. 360-DAY SPECIAL INSPECTION. The Special Inspection shall be performed by organizational level or above upon issue prior to placing in service, and every 360 days thereafter. To conduct the 360-Day Special Inspection proceed as follows:

1. Inspect liner materials for cuts, tears, abrasions and deterioration. Inspect seams for loose or broken stitching.

2. Inspect slide fastener for corrosion and proper operation.

3. Inspect hook and pile tape for damage or broken stitching.

4. If repairs are necessary, repair in accordance with paragraph 3-241.

5. Inspect CWU-81/P and CWU-82/P liners to insure that it is a Navy authorized garment with proper identification, e.g. NIIN, Contract Number, Part Number etc. Liners that have been open purchased from commercial establishments may not have the proper flame resistance and are not authorized.

6. Document inspection in accordance with COMNAVAIRFORINST 4790.2.

3-240. CLEANING. To clean the CWU-81/P and CWU-82/P liners, proceed as follows:

Materials Required

Quantity	Description	Reference Number
As Required	Detergent, Cold Water	Commercial

CAUTION

Do not dry-clean liners. Do not use fabric softener, bleaches, starch, soap or other additives. Do not iron. Do not launder in hot temperatures and do not tumble dry.

1. Engage all hook and pile fasteners.

2. Launder in automatic washer or hand launder in warm water.

3. Drip dry on wooden or plastic hanger or tumble dry at low temperature on gentle cycle.

3-241. REPAIRS. Repairs shall be limited to mending small tears and holes, restitching of partially opened seams and replacement of hook and pile tape. To repair the CWU-81/P and CWU-82/P liners, proceed as follows:

Materials Required

Quantity	Description	Reference Number
As Required	Thread, Aramid, Spun Staple, Natural Color	MIL-T-83193 NIIN 01-225-4672
As Required	Cloth, Pajama Check Weave, or Plain Weave, Aramid, Natural Color	MIL-C-43774 NIIN 01-225-9231
As Required	Fastener Tape, Hook, Type II, Class 1, 1-Inch Wide, White	MIL-F-21840 NIIN 01-117-0508
As Required	Fastener Tape, Pile, Class 1, 2-Inch Wide	MIL-F-21840 NIIN 01-107-8352

1. Loose or broken stitching shall be repaired by restitching using type 301 lockstitch, 8 to 10 stitches per inch, with minimum 1-inch back or overstitch.

2. Small holes and tears, up to 1/2 inch in length or diameter, may be mended and/or darned on a sewing machine. To repair holes or tears larger than 1/2 inch in length or diameter, use patches. To patch, cut 2 pieces of aramid cloth at least 1 inch larger than the damaged area in all directions. Turn the edges of one patch under 1/4 inch, center the patch on the inside of the liner over the damaged area and sew the patch 1/8 inch from the folded edge. Turn the edges of the second patch under 1/4 inch, center the patch on the outside of the liner over the damaged area and stitch through all thicknesses, 1/16 to 1/8 from the folded edge.

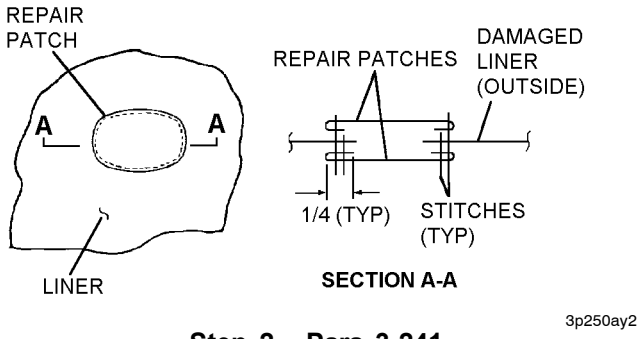

Step 2 - Para 3-241

3. Damaged hook and pile fastener tape shall be replaced with the same type and length of tape, and in the same manner and location as originally installed. Pile tape may be replaced by stitching through all layers of the liner.

3-242. STORAGE.

3-243. CWU-81/P and CWU-82/P liners shall be stored as part of the anti-exposure coverall assembly in accordance with paragraph 5-61.

Section 33-13. U.S.I.A. Military Exotherm Fleece Jumpsuit (SAR Swimmer's Only)

3-244. GENERAL.

3-245. U.S.I.A. Military Exotherm Fleece Jumpsuit is a commercial off-the-shelf (COTS) under garment utilized with the CWU-43/P drawers and the CWU-44/P undershirt (Section 3-16) and the SAR swimmer's dry suit, Mustang Model MSD560 and 565 Goretex coverall (Section 5-5).

3-246. PROCUREMENT.

The jumpsuit is an open purchase garment. It can be procured in 3 different configurations, EX1, EX2, and EX3 as well as 16 different sizes. EX1 is the basic jumpsuit recommended for normal flight operations. EX2 and EX3 are thicker, heavier jumpsuits used for operations in cold climates. All three configurations are authorized for procurement and use. Jumpsuits are supplied in sizes XXS to XXXL. See Table 3-24 for sizing information. The jumpsuit can be procured from:

U.S.I.A., Military Defense Division (code 49772)
1600 Railroad Ave.
St. Helens, Oregon 97051-3133
Phone 1-800-247-8070

3-247. MODIFICATIONS.

3-248. There are no current directives affecting this equipment at this time.

3-249. MAINTENANCE.

3-250. The aircrewmember is responsible for pre/postflight inspection and cleaning. Repairs or other maintenance actions required shall be performed by organizational level or above. All maintenance actions, inspections and repairs shall be recorded in accordance with COMNAVAIRFORINST 4790.2.

3-251. INSPECTION.

3-252. The jumpsuit shall be subjected to a Place-In-Service Inspection, a Preflight/Postflight Inspection and a 360-Day Special Inspection.

3-253. PLACE-IN-SERVICE INSPECTION. The jumpsuit shall be inspected prior to Place-In-Service. To conduct the Place-In-Service Inspection proceed as follows:

1. Perform visual inspection in accordance with paragraph 3-255.

2. Annotate aircrewmember's identification BUNO on the tag of the jumpsuit being careful not to cover identifying data for the jumpsuit (such as NIIN).

3. Document Place-In-Service Inspection in accordance with COMNAVAIRFORINST 4790.2.

3-254. PREFLIGHT/POSTFLIGHT INSPECTION . The aircrewmember is responsible for Preflight/Postflight Inspection. Preflight/Postflight Inspection consists of a visual inspection for condition of the jumpsuit. Inspect in accordance with paragraph 3-255.

3-255. 360-DAY SPECIAL INSPECTION. The Special Inspection shall be performed by organizational level or above upon issue prior to placing in service, and every 360 days thereafter. To conduct the 360-Day Special Inspection proceed as follows:

1. Inspect fabric for cuts, tears, abrasions or holes.

2. Inspect stitching and seams for holes and tears.

3. Inspect slide fasteners for secure attachment, damage, ease of operation, and attachment of pull tab.

4. Inspect jumpsuit to insure that it is a Navy authorized jumpsuits with proper identification, e.g. NIIN, Contract Number, Part Number etc. Jumpsuit that have been open purchased from commercial establishments may not have the proper flame resistance and are not authorized.

3-256. CLEANING. Clean in accordance with manufacturer's instructions.

3-257. REPAIRS. There are no authorized repairs to the jumpsuit.

3-258. SERVICE LIFE. Garment shall remain in service until it is damaged.

Table 3-24. Exotherm Fleece Jumpsuit Sizing Chart

	XXS (Note 1)	XS	S	S-Long	M-Short	M	M-Long	L-Short
Height	61	61 - 64	65 - 67	68 - 70	65 - 67	68 - 70	71 - 73	68 - 70
Chest	34	34 - 36	37 - 39	39 - 41	40 - 42	40 - 42	40 - 42	43 - 45
Hip	36	36 - 38	39 - 41	39 - 41	42 - 44	42 - 44	42 - 44	45 - 47
Inseam	24	26	27 1/2	29	27 1/2	29	30 1/2	29
Torso	59	62	65	68	65	68	71	68
Sleeve	27 1/2	29	30 1/2	32	30 1/2	32	33 1/2	32
	L	L-Long	XL-Short	XL	XL-Long	XXL-Short (Note 1)	XXL (Note 1)	XXXL (Note 1)
Height	71 - 73	74 - 76	71 - 73	74 - 76	77 - 79	74 - 76	77 - 79	77 - 79
Chest	43 - 45	43 - 45	46 - 48	46 - 48	46 - 48	49 - 51	49 - 51	52 - 54
Hip	45 - 47	43 - 45	48 - 50	48 - 50	48 - 50	51 - 53	51 - 53	54 - 57
Inseam	30 1/2	32	30 1/2	32	33 1/2	32	33 1/2	33 1/2
Torso	71	74	71	74	77	74	77	77
Sleeve	33 1/2	35	33 1/2	35	36 1/2	35	36 1/2	36 1/2

Notes: 1. These are not stock sizes and if ordered will be charged as semi or full custom fitting.
2. Unless otherwise indicated, all dimensions are in inches.

Section 3-14. Cold Weather Fiber Pile Liners

3-259. GENERAL.

3-260. The cold weather fiber pile liners consist of a shirt, MIL-S-44163, and overalls, MIL-O-44191 (Figure 3-25). These liners are one of two types of liners that have been approved for use by aircrew in cold weather environments. The liners are worn to provide additional thermal protection for aircrew who require increased warmth.

3-261. CONFIGURATION.

3-262. The fiber pile shirt will provide the aircrewmember with additional warmth in cold weather environments. They should be worn over top a layer of long underwear and underneath outer flight clothing such as the CWU-45/P Jacket and 18/P Trousers or the CWU-64/P Cold Weather Flyer's Coverall. The liners are constructed from a synthetic polyester fiber pile and are brown in color. The shirt has a slide fastener closing with a black pull tab for easy grasping. Two pockets with angled side openings are located above the hem and at the chest on each side of the front of the shirt. Black nylon reinforcement patches are located at the shoulders and from the elbow to cuff at the back of the forearm. The overalls have a 2 way slide fastener on the outer side of each leg extending the entire length of the leg, and a slide fastener relief portal opening. The slide fasteners have a black pull tab for easy grasping. Two elastic webbing suspenders provide length adjustability and have quick release fasteners in the front. The leg length is intentionally short and should meet the top of the boot. The shirt is available in 5 sizes and the overalls are available in 10 sizes (Table 3-25).

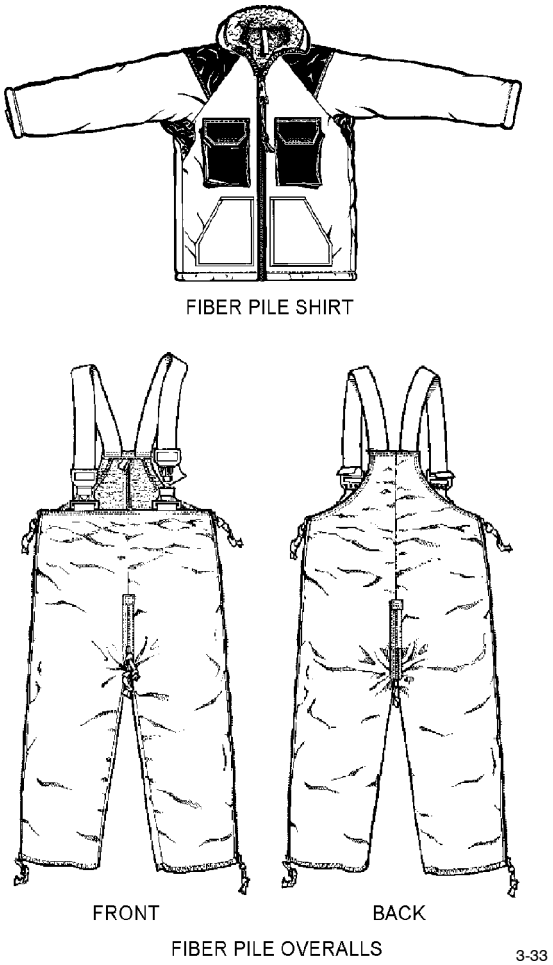

Figure 3-25. Cold Weather Fiber Pile Liners

3-263. APPLICATION.

3-264. The fiber pile shirt and overalls are designated for use by all aircrewmembers and are to be used for inflight operations in cold weather environments. Due to their bulk and high capacity for warmth, they are primarily recommended for helicopter aircrew. They should always be worn overtop a layer of long underwear and underneath a fire-resistant (aramid) garment such as the flyer's coverall, CWU-45/P Jacket, CWU-18/P Trousers or CWU-64/P Cold Weather Flyer's Coverall.

3-265. FITTING.

3-266. The shirt and overalls should be fit in accordance with the measurements given in Table 3-25. Determine the proper size by having the air-crewmember try on the predicted size and determining if it is adequate. The shirt and overalls should provide a fit close to the person but should not be tight or binding. The size of the outergarment being worn with the liner may need to be increased if there is binding when the two layers are worn together.

Table 3-25. Fiber Pile Shirt and Overall Sizes

Nomenclature	Size	NIIN
Cold Weather Shirt	Extra Small	01-228-1353
	Small	01-228-1354
	Medium	01-228-1355
	Large	01-228-1356
	Extra Large	01-228-1357
Cold Weather Overalls	Extra Small Short	01-223-1323
	Extra Small Long	01-223-1324
	Small Short/Regular	01-223-1325
	Small Long	01-223-1326
	Medium Short/Regular	01-223-1327
	Medium Long	01-223-1328
	Large Short/Regular	01-223-1329
	Large Long	01-223-1330
	Extra Large Short/Regular	01-223-1331
	Extra Large Long	01-223-1332

CAUTION

If the layering of garments causes them to become tight, they will lose their insulation properties as well as provide a decreased level of protection in the event of a fire.

3-267. MODIFICATIONS.

3-268. There are no current directives affecting this equipment at this time.

3-269. MAINTENANCE.

3-270. The aircrewmember is responsible for pre/postflight inspection and cleaning. Repairs or other maintenance actions required shall be performed by organizational level or above. All maintenance actions, inspections and repairs shall be recorded in accordance with COMNAVAIRFORINST 4790.2.

3-271. INSPECTION.

3-272. The liners shall be subjected to a Place-In-Service Inspection, a Preflight/Postflight Inspection, and a 360-Day Special Inspection.

3-273. PLACE-IN-SERVICE INSPECTION. The liners shall be inspected prior to Place-In-Service. To conduct the Place-In-Service Inspection proceed as follows:

1. Fit assembly to aircrewmember using fitting procedures outlined in paragraph 3-265.

2. Perform visual inspection in accordance with paragraph 3-275.

3. Annotate aircrewmember's identification BUNO on the tag of the liners being careful not to cover identifying data (such as NIIN).

4. Document Place-In-Service Inspection in accordance witrh COMNAVAIRFORINST 4790.2.

3-274. PREFLIGHT/POSTFLIGHT INSPECTION. The aircrewmember is responsible for Preflight/Postflight Inspection. Preflight/Postflight Inspection consists of a visual inspection for condition of the liners. Inspect in accordance with paragraph 3-275.

3-275. 360-DAY SPECIAL INSPECTION. The Special Inspection shall be performed by organizational level or above upon issue prior to placing in service, and every 360 days thereafter. To conduct the 360-Day Special Inspection proceed as follows:

1. Inspect fabric for cuts, tears, abrasions or holes.

2. Inspect stitching and seams for holes and tears.

3. Inspect slide fasteners for secure attachment, damage, ease of operation, and attachment of pull tab.

4. Inspect suspenders for secure attachment and proper function of the quick-release buckles.

5. Verify condition of the shirt and overalls. If discrepancies are found follow procedures outlined in the repair section below. If major discrepancies are found, discard the jacket or trouser.

6. Inspect liners to insure that it is a Navy authorized liners with proper identification, e.g. NIIN, Contract Number, Part Number etc. Liners that have been open purchased from commercial establishments may not have the proper flame resistance and are not authorized.

7. Document in accordance with COMNAVAIRFORINST 4790.2.

8. Document Place-In-Service Inspection in accordance with COMNAVAIRFORINST 4790.2.

3-276. CLEANING. Launder the shirt and overalls as follows:

CAUTION

Do not use bleaching compound, starch or dry cleaning.

1. Machine wash using the delicate fabric cycle or wash by hand using water no hotter than 85°F and cold water detergent. Rinse in clean cold water.

2. Tumble dry by machine on the delicate setting (not to exceed 90°F). Remove clothing immediately at the end of the drying cycle. Avoid over drying. To drip dry place clothing on a rust proof hanger.

3. Do not press after drying.

3-277. REPAIRS. Repair of the shirt and trousers is limited to cuts, holes (1 inch or less in length or diameter are repairable; holes larger than 1 inch discard shirt or overall), loose/broken stitching, replacement of slide fastener pull tab.

1. If there is a hole, repair using cloth MIL-C-83429 (NIIN 01-147-2064), and thread MIL-T-83193 (NIIN 00-130-6245).

2. Stitching shall be in accordance with ASTM-D-6193, Type 301 lockstitch, 7 to 10 stitches per inch with a minimum backstitch of 1 inch.

3. Replace missing slide fastener pull tab using MIL-T-5038, Type III nylon tape (NIIN 00-176-8084), 3/8 inch wide and 15 inches long. Fold tape in half and insert fold through the pull tab eyelet, secure with a larkshead knot.

Section 3-15. Cold Weather Liners

3-278. GENERAL.

3-279. The CWU-9/P jacket and trouser liners, MIL-L-27546 (Figure 3-26) are one of two types of liners that have been approved for optional use by aircrew in cold weather environments. These liners are worn to provide additional thermal protection for aircrew who require increased warmth.

3-280. CONFIGURATION.

3-281. The liners are close fitting and are designed to provide additional warmth when worn underneath outer flight clothing such as the CWU-45/P Jacket and CWU-18/P Winter Trousers or the CWU-64/P Cold Weather Flyer's Coverall. The liners should be worn overtop a layer of long underwear. The CWU-9/P liners are constructed of a polyester fiber batting quilted between nylon taffeta. The jacket has knit wrist cuffs and a knit collar. There is an exterior chest pocket and the front closes with a slide fastener. The slide fastener is covered with a protective flap that closes with snaps. The jacket also has two vertically placed female snaps at the side seam to allow the jacket and trouser to be snapped together. The male end of the snap is located on the waist side seam of the trouser. By snapping the pieces together they remain in place during use. The female jacket snaps affix to their male counterparts on the trouser liner at which ever of the two positions is most comfortable. The trouser has knit cuffs at the ankle and an elastic waistband. The waist and the fly opening both snap shut. The trousers have patch pockets on each side of the back. Both the jacket and trousers are available in 4 sizes (Table 3-26).

3-282. APPLICATION.

3-283. The CWU-9/P jacket and trouser liner are designated for use by all aircrewmembers and are to be used for inflight operations in cold weather environments. They should always be worn overtop a layer of long underwear and underneath a fire-resistant (aramid) garment such as the flyer's coverall, CWU-45/P Jacket, CWU-18/P Winter Trousers or CWU-64/P Cold Weather Flyer's Coverall.

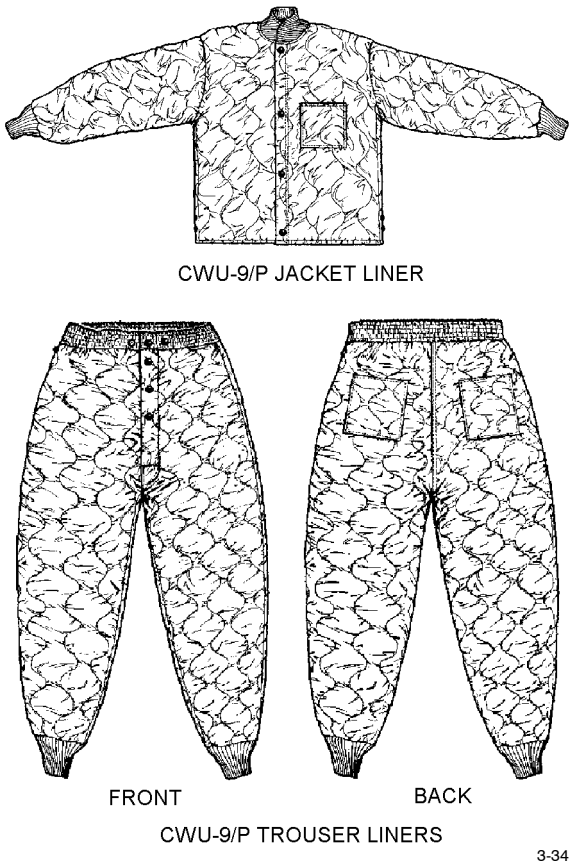

Figure 3-26. CWU-9/P Cold Weather Liners

3-284. FITTING.

3-285. The liners should be fit in accordance with the measurements given in Table 3-26. Determine the proper size by having the aircrewmember try on the predicted size and determining if it is adequate. The liners should fit close to the person but should not be tight or binding. The size of the outergarment being worn with the liner may need to be increased if there is binding when the two layers are worn together.

CAUTION

If the layering of garments causes them to become tight, they will lose their insulative properties as well as provide a decreased level of protection in the event of an aircraft fire.

3-286. MODIFICATIONS.

3-287. There are no current directives affecting this equipment at this time.

3-288. MAINTENANCE.

3-289. The aircrewmember is responsible for pre/postflight inspection and cleaning. All maintenance actions, inspections and repairs shall be recorded in accordance with COMNAVAIRFORINST 4790.2.

3-290. INSPECTION.

3-291. The liners shall be subjected to a Place-In-Service Inspection, a Preflight/Postflight Inspection, and a 360-Day Special Inspection.

3-292. PLACE-IN-SERVICE INSPECTION. The liners shall be inspected prior to Place-In-Service. To conduct the Place-In-Service Inspection proceed as follows:

1. Fit assembly to aircrewmember using fitting procedures outlined in paragraph 3-284.

2. Perform visual inspection in accordance with paragraph 3-294.

3. Annotate aircrewmember's identification BUNO on the tag of the liners being careful not to cover identifying data for the liners (such as NIIN).

4. Document Place-In-Service Inspection in accordance with COMNAVAIRFORINST 4790.2.

3-293. PREFLIGHT/POSTFLIGHT INSPECTION. The aircrewmember is responsible for Preflight/Postflight Inspection. Preflight/Postflight Inspection consists of a visual inspection for condition of the anti-flash liners. Inspect in accordance with paragraph 3-294.

3-294. 360-DAY SPECIAL INSPECTION. The Special Inspection shall be performed by organizational level or above upon issue prior to placing in service, and every 360 days thereafter. To conduct the 360-Day Special Inspection proceed as follows:

1. Inspect fabric for cuts, tears, abrasions or holes.

2. Inspect stitching and seams for holes and tears.

3. Inspect slide fasteners and snaps for secure attachment

4. Verify condition of the liners. If discrepancies are found follow procedures outlined in the repair section below. If major discrepancies are found discard the jacket or trousers.

5. Inspect liners to insure that it is a Navy authorized liners with proper identification, e.g. NIIN, Contract Number, Part Number etc. Liners that have been open purchased from commercial establishments may not have the proper flame resistance and are not authorized.

6. Document in accordance with COMNAVAIRFORINST 4790.2.

3-295. CLEANING. Launder the liners as follows:

CAUTION

Do not use chlorine bleach or starch.

1. Machine Washing: Use permanent press cycle, warm water, mild detergent.

2. Hand Washing: Wash in warm water, mild detergent. Do not wring or twist. Rinse in clean warm water.

3. Dry at low heat (do not exceed 130°F). After drying tumble at room temperature for 10 minutes. Remove immediately from dryer. To drip dry, remove from water and place on a rustproof hanger.

3-296. REPAIRS. Repair of the CWU-9/P liner is limited to cuts, tears, holes (1 inch or less in length or diameter are repairable; holes larger than 1 inch discard liner), loose/broken stitching and missing snaps.

Table 3-26. Sizing Guide (CWU-9/P Liners)

Nomenclature	Size	Measurement	NIIN
CWU-9/P Jacket Liner	Small Medium Large Extra Large	34 - 36 38 - 40 42 - 44 46 - 48	00-844-9811 00-844-9812 00-844-9813 00-844-9814
CWU-9/P Trouser Liner	Small Medium Large Extra Large	26 - 29 30 - 33 34 - 37 38 - 41	00-844-9815 00-844-9816 00-844-9817 00-844-9818

Section 3-16. CWU-43/P and CWU-44/P Cold Weather Underwear

3-297. GENERAL.

3-298. The CWU-43/P and CWU-44/P cold weather un-derwear (MIL-D-85040) is designed to provide added thermal insulation and is constructed from (aramid) high temperature-resistant material. See Figure 3-27 and Figure 3-28.

3-299. CONFIGURATION.

3-300. DRAWERS. The drawers are full length and the ankles are of tight knit weave to fit snugly. They have a boxer style fly closure and an elastic waist band. See Figure 3-27.

3-301. UNDERSHIRT. The undershirt has full sleeves and the cuffs and neckband are of a tight knit weave to fit snugly. See Figure 3-28.

3-302. APPLICATION.

3-303. The cold weather underwear is designated for use by all aircrewmembers operating in cold temperatures. The underwear may be used with standard Navy cold weather equipment.

3-304. FITTING.

3-305. The cold weather undershirt and drawers are individually fitted to the aircrewmember. The proper size cold weather underwear corresponds to the regular underwear size. CWU-43/P and CWU-44/P sizes and dimensions are listed in Table 3-27.

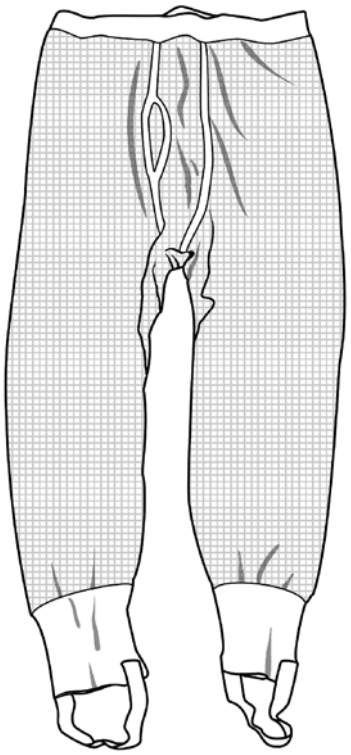

Figure 3-27. CWU-43/P Drawers

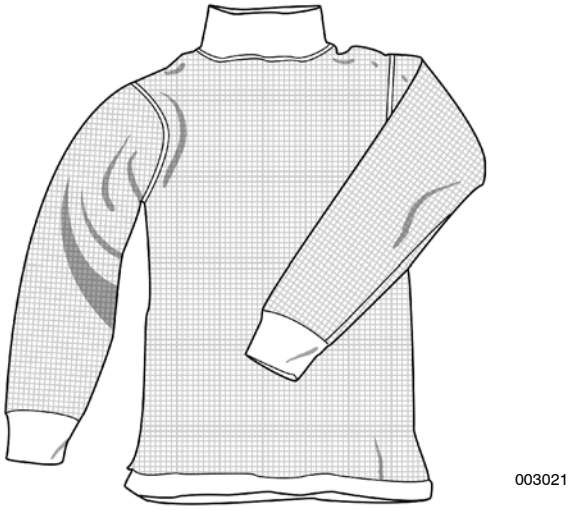

Figure 3-28. CWU-44/P Undershirt

Table 3-27. Aramid Underwear Sizes

Size	Chest Measurements	Waist Measurements
X-Small	30 - 33	22 - 25
Small	34 - 37	26 - 29
Medium	38 - 41	30 - 33
Large	42 - 45	34 - 37
X-Large	46 - 49	38 - 41
Note: All dimensions are given in inches.		

3-306. MODIFICATIONS.

3-307. There are no current directives affecting the CWU-43/P and CWU-44/P.

3-308. MAINTENANCE.

3-309. The aircrewmember is responsible for pre/post-flight inspection and cleaning. Repairs or other maintenance actions required shall be performed by organizational level or above. All maintenance actions, inspections and repairs shall be recorded in accordance with COMNAVAIRFORINST 4790.2.

3-310. INSPECTION.

3-311. The CWU-43/P and CWU-44/P shall be subjected to a Place-In-Service Inspection, a Preflight/Postflight Inspection, and a 360-Day Special Inspection.

3-312. PLACE-IN-SERVICE INSPECTION. The CWU-43/P and CWU-44/P shall be inspected prior to Place-In-Service. To conduct the Place-In-Service Inspection proceed as follows:

1. Fit assembly to aircrewmember using fitting procedures outlined in paragraph 3-304.

2. Perform visual inspection in accordance with paragraph 3-314.

3. Annotate aircrewmember's identification BUNO on the tag of the underwear being careful not to cover identifying data for the underwear (such as NIIN).

4. Document Place-In-Service Inspection in accordance with COMNAVAIRFORINST 4790.2.

3-313. PREFLIGHT/POSTFLIGHT INSPECTION. The aircrewmember is responsible for Preflight/Postflight Inspection. Preflight/Postflight Inspection consists of a visual inspection for condition of the underwear. Inspect in accordance with paragraph 3-314.

3-314. 360-DAY SPECIAL INSPECTION. The Special Inspection shall be performed by organizational level or above upon issue prior to placing in service, and every 360 days thereafter. To conduct the 360-Day Special Inspection proceed as follows:

1. Inspect fabric for cuts, tears and abrasions.

2. Inspect stitching for holes and tears.

3. Inspect underwear to insure that it is a Navy authorized garment with proper identification, e.g. NIIN, Contract Number, Part Number etc. Underwear that have been open purchased from commercial establishments may not have the proper flame resistance and are not authorized.

4. Verify condition of underwear.

5. Record all maintenance actions and inspections in accordance with COMNAVAIRFORINST 4790.2.

3-315. CLEANING. To clean and dry cold weather underwear, launder in home or commercial washers and driers.

3-316. REPAIRS AND FABRICATIONS.

3-317. Repairs and fabrications shall be performed by the lowest maintenance level possible. Repairs shall be limited to stitching small damage/holes/tears in fabric and seams.

Section 3-17. SAR/CSAR Danner Recon Boot

3-318. GENERAL.

3-319. This 8-inch all-leather boot (formerly known as the Danner Olympic) offers support and stability, as well as 200 gram Thinsulate insulation for warmth (Figure 3-29). The boot is designed to protect the aircrewmember's foot in extreme cold weather and is authorized for SAR/CSAR crew on INLAND SAR Missions only.

3-320. CONFIGURATION.

3-321. The boot consists of a full grain waterproof leather upper with a Vibram Ketterlift outersole, Gortex liner and 200 gram Thinsulate insulation. It has an Airthotic footbed with rubber and PU midsoles. The boot is 8 inches in height, laces through eyelets (no D-rings) and weighs approximately 64 ounces.

3-322. APPLICATION.

3-323. The Danner Recon boot is a cold weather boot that is authorized for SAR/CSAR crew for use on inland SAR Missions only. The boot does not have a steel toe and is not for general aircrew use.

3-324. FITTING.

3-325. The boot is fitted to the aircrewmember and normally corresponds to his/her regular shoe size.

Figure 3-29. SAR/CSAR Danner Recon Boot

3-326. PROCUREMENT.

3-327. Danner Boots can be open purchased directly from Danner online at http://www.danner.com. Danner can be contacted at:

Danner Corporate Headquarters
18550 NE Riverside Pkwy.
Portland, OR 97230
Tel: (800)-345-0430
(503)-251-1100
FAX: (503)-251-1119

3-328. MODIFICATIONS.

3-329. There are no current directives affecting the SAR/CSAR Danner Recon Boot.

3-330. MAINTENANCE.

NOTE

There are times when the inside of the boot may become damp due to sweating feet. Due to the addtional insulation and the waterproof/breathable liner, drying out the boot may require a longer perior of time than regular footwear. Placing the boot in a well-ventilated area and opening up the top of the boot should allow it to dry out quickly. Placing the boot neat a high heat sourtce is not recommended since that could damage the boot.

Upon issue and periodically thereafter, it is recommended that an additional layer of water sealant be applied to the leather. Products that have been tested and authorized for use include mink oil, silicone spray, or Sno-Seal These products are available through local sporting goods stores or shoe stores.

3-331. The aircrewmember is responsible for pre/postflight inspection and cleaning of the boots. Maintenance is limited to cleaning and polishing. Polish used for everyday care of the boot is acceptable. Repairs or other maintenance actions required shall be performed by organizational level or above. All maintenance actions,inspections and repairs shall be recorded in accordance with COMNAVAIRFORINST 4790.2.

3-332. INSPECTION.

3-333. The boots shall be subjected to a Place-In-Service Inspection, a Preflight/Postflight Inspection, and a 360-Day Special Inspection.

3-334. PLACE-IN-SERVICE INSPECTION. The Danner Boots shall be inspected prior to Place-In-Service. To conduct the Place-In-Service Inspection proceed as follows:

1. Fit boots to aircrewmember using fitting procedures outlined in paragraph 3-324.

2. Perform visual inspection in accordance with paragraph 3-336.

3. Annotate aircrewmember's identification BUNO on the inside of the boots being careful not to cover identifying data for the boot.

4. Document Place-In-Service Inspection in accordance with COMNAVAIRFORINST 4790.2.

3-335. PREFLIGHT/POSTFLIGHT INSPECTION. The aircrewmember is responsible for Preflight/Postflight Inspection. Preflight/Postflight Inspection consists of a visual inspection for condition of the boots. Inspect in accordance with paragraph 3-336.

3-336. 360-DAY SPECIAL INSPECTION. The Special Inspection shall be performed by organizational level or above upon issue prior to placing in service, and every 360 days thereafter. To conduct the 360-Day Special Inspection proceed as follows:

1. Inspect leather uppers for condition of the leather. Small nicks and scrapes are acceptable but deep cuts, scrapes or gouges in the leather should call for replacement of the boots. This is a very subjective inspection and is up to the discretion of the inspecting facility as to whether the boots need to be replaced because of damage to the upper leather portion of the boot.

2. Inspect sole of the boots for obsessive wear or extremely uneven wearing of the sole. The integrity of the sole is of the utmost importance for both FOD resistance and slip resistant protection. If the leather upper of the boot is still in good condition but the sole is heavily damaged consider having the boot resoled as opposed to completely replacing the boot. See paragraph 3-360 for information pertaining to availability of replacement sole and having the boot resoled.

3. Inspect boots to insure that they are Navy authorized boots with proper identification, e.g. NIIN, Contract Number, Part Number, or manufactures part number. Unauthorized boots that have been open purchased from commercial establishments may not have the proper flame resistance or steel toes and are not authorized. All currently authorized boots are located in this manual. Information on any newly authorized boots for aircrewmen will be distributed

to the fleet via Naval message traffic such as the State of the Art Message.

4. Verify condition of boots.

5. Record all maintenance actions and inspections in accordance with COMNAVAIRFORINST 4790.2.

3-337. REPAIRS AND FABRICATION.

3-338. Repairs and fabrications shall be performed by the lowest maintenance level possible. Repairs are limited to replacing laces conforming to V-L-61 (NIIN 00-945-3969) and having the sole replaced if desired at a cost of approximately $50.00 (includes shipping). Soles must be replaced with the same exact sole that was originally on the boot from the manufacturer - no substitutes are allowed. NuShoe may not have all of the different types of soles the Navy authorizes so contact them to find out if they have the sole for this particular boot. Information for this service from NuShoe can be found at http://www.nushoe.com/product_lines/navy.htm or by calling toll free 1-877-687-4631 or 4661.

Section 3-18. Brown Leather Flyer's Boot, (Belleville 330 ST)

3-339. GENERAL.

3-340. The impact resistant brown flyer's boot (Figure 3-30) is designed to protect the aircrewmember's foot against high impact forces. The boot is water-resistant.

3-341. CONFIGURATION.

3-342. The upper boot is constructed of high quality calfskin, is brown in color, and is lined with Cambrelle, which serves as a wicking layer. The boot is 8 inches high when fully laced and is available in sizes 3 through 14 in Regular and Wide widths. Available sizes and dimensions are listed in Table 3-28. The direct molded sole is constructed of non-slip, non-marking, jet-fuel resistant rubber and has a Chevron tread. The steel box is constructed of cold-rolled carbon steel to provide a safety margin through greater compression resistance. The removable cushion insert is 0.180 inches to 0.250 inches thick, providing enhanced comfort.

3-343. APPLICATION.

3-344. The boot is designed for use by all aircrewmembers.

3-345. FITTING.

3-346. The boot is fitted to the aircrewmember and normally corresponds to his/her regular shoe size or 1/2 size smaller than the old standard flyer's boot. Available sizes and widths are listed in Table 3-28.

3-347. PROCUREMENT.

3-348. Belleville 330 ST Brown Leather Flyers Boots can be open purchased directly from Belleville:

Belleville Shoe Mfg. Co.
P.O. Box 508
Belleville, IL 62222
Tel: (800)-376-6978
(618)-233-5600
FAX: (618) 233-5617
WEB: http://www.bellevilleshoe.com

Figure 3-30. Brown Leather Flyer's Boot

Table 3-28. Brown Leather Flyer's Boot Sizes and Dimensions

Widths	Sizes	
R-W	3 4 5 6 and 6 1/2 7 and 7 1/2 8 and 8 1/2	9 and 9 1/2 10 and 10 1/2 11 and 11 1/2 12 13 14

3-349. MODIFICATIONS.

3-350. There are no current directives affecting the Belleville 330 ST Flyer's Boot.

3-351. MAINTENANCE.

3-352. The aircrewmember is responsible for pre/post-flight inspection and cleaning of the boots. Maintenance is limited to cleaning and polishing. Polish used for everyday care of the boot is acceptable. Repairs or other maintenance actions required shall be performed by organizational level or above. All maintenance actions, inspections and repairs shall be recorded in accordance with COMNAVAIRFORINST 4790.2.

3-353. INSPECTION.

3-354. The boots shall be subjected to a Place-In-Service Inspection, a Preflight/Postflight Inspection, and a 360-Day Special Inspection.

3-355. PLACE-IN-SERVICE INSPECTION. The boots shall be inspected prior to Place-In-Service. To conduct the Place-In-Service Inspection proceed as follows:

1. Fit boots to aircrewmember using fitting procedures outlined in paragraph 3-345.

2. Perform visual inspection in accordance with paragraph 3-357.

3. Annotate aircrewmember's identification BUNO on the inside of the boot being careful not to cover identifying data for the boot.

4. Document Place-In-Service Inspection in accordance with COMNAVAIRFORINST 4790.2.

3-356. PREFLIGHT/POSTFLIGHT INSPECTION. The aircrewmember is responsible for Preflight/Postflight Inspection. Preflight/Postflight Inspection consists of a visual inspection for condition of the boots. Inspect in accordance with paragraph 3-357.

3-357. 360-DAY SPECIAL INSPECTION. The Special Inspection shall be performed by organizational level or above upon issue prior to placing in service, and every 360 days thereafter. To conduct the 360-Day Special Inspection proceed as follows:

1. Inspect leather uppers for condition of the leather. Small nicks and scrapes are acceptable but deep cuts, scrapes or gouges in the leather should call for replacement of the boots. This is a very subjective inspection and is up to the discretion of the inspecting facility as to whether the boots need to be replaced because of damage to the upper leather portion of the boot.

2. Inspect sole of the boots for obsessive wear or extremely uneven wearing of the sole. The integrity of the sole is of the utmost importance for both FOD resistance and slip resistant protection. If the leather upper of the boot is still in good condition but the sole is heavily damaged consider having the boot resoled as opposed to completely replacing the boot. See paragraph 3-360 for information pertaining to availability of replacement sole and having the boot resoled.

3. Inspect boots to insure that they are Navy authorized boots with proper identification, e.g. NIIN, Contract Number, Part Number, or manufactures part number. Unauthorized boots that have been open purchased from commercial establishments may not have the proper flame resistance or steel toes and are not authorized. All currently authorized boots are located in this manual. Information on any newly authorized boots for aircrewmen will be distributed to the fleet via Naval message traffic such as the State of the Art Message.

4. Verify condition of boots.

5. Record all maintenance actions and inspections in accordance with COMNAVAIRFORINST 4790.2.

3-358. REPAIRS AND FABRICATIONS.

3-359. Repairs and fabrications shall be performed by the lowest maintenance level possible. Repairs are limited to replacing laces conforming to V-L-61 (NIIN 00-945-3969) and having the sole replaced if desired at a cost of approximately $50.00 (includes shipping). Soles must be replaced with the same exact sole that was originally on the boot from the manufacturer - no substitutes are allowed. NuShoe may not have all of the different types of soles the Navy authorizes so contact them to find out if they have the sole for this particular boot. Information for this service from NuShoe can be found at http://www.nushoe.com/product_lines/navy.htm or by calling toll free 1-877-687-4631 or 4661.

3-360. RESOLE OPTION. Boots with worn soles can be resoled rather than replaced if the leather upper is in good condition. The resole which has the Vibram Chevron Sole and is done by NuShoe and can be open purchased at a cost of approximately $50.00 (includes shipping). Information about this service can be found at http://www.nushoe.com/product_lines/navy.htm or by calling toll free 1-877-687-4631 or 4661.

Section 3-19. Aircrew Safety Boot

3-361. GENERAL.

3-362. The impact resistant aircrew safety boot (A-A-59530) is designed to protect the aircrewmember's foot against high impact forces. See Figure 3-31. Optional leather slide fastener inserts are available.

3-363. CONFIGURATION.

3-364. The upper boot is constructed of high quality calfskin, is water-resistant, is black in color, and lined with soft, full grain glove leather. The boot has 14 eyelets and uses a 60 inch lace (Figure 3-31). The boot is available in whole and half sizes 3 to 14 1/2. Each size is available in Narrow, Regular, Wide and Extra Wide sizes. The boot has a one piece molded sole with anti-fod chevron thread, cushioned mid-soles, removable cushion insert, more naturally shaped steel toe and padded top collar. The traction tread outsoles and heels are made of non-slip, non-marking, jet fuel-resistant rubber. The steel box toe is constructed of cold-rolled carbon steel to provide a safety margin through greater compression resistance. Optional leather slide fastener inserts for laced boots are available. The insert has nine pairs of eyelets (NIIN 00-020-8448), see Figure 3-32.

3-365. APPLICATION.

3-366. The boot is designed for use by all aircrewmembers.

Figure 3-31. Aircrew Safety Boot

3-367. FITTING.

3-368. The boot is fitted to the aircrewmember and normally corresponds to his regular shoe size. Inserts can be utilized with boots having less eyelets than the insert if eyelets on the inserts are skipped periodically as they are laced in. Adjust laces with boots on and zipper insert closed. A 30-inch lace (NIIN 00-203-2760) should be used to lace in the insert. Knot one end of the lace and start at the top eyelet, lace down that side, across and up the other side, knotting the end of the lace at the last (top) eyelet. See Figure 3-32.

3-369. MODIFICATIONS.

3-370. The aircrew safety boot shall be updated by comparing the configuration of the boot with the directives listed in Table 3-29.

3-371. MAINTENANCE.

3-372. The aircrewmember is responsible for pre/postflight inspection and cleaning of the boots. Maintenance is limited to cleaning and polishing. Polish used for everyday care of the boot is acceptable. Repairs or other maintenance actions required shall be performed by organizational level or above. All maintenance actions, inspections and repairs shall be recorded in accordance with COMNAVAIRFORINST 4790.2.

3-373. INSPECTION.

3-374. The boots shall be subjected to a Place-In-Service Inspection, a Preflight/Postflight Inspection, and a 360-Day Special Inspection.

3-375. PLACE-IN-SERVICE INSPECTION. The boots shall be inspected prior to Place-In-Service. To conduct the Place-In-Service Inspection proceed as follows:

1. Fit boots to aircrewmember using fitting procedures outlined in paragraph 3-367.

2. Perform visual inspection in accordance with paragraph 3-377.

3. Annotate aircrewmember's identification BUNO on the inside of the boots being careful not to cover identifying data for the boot.

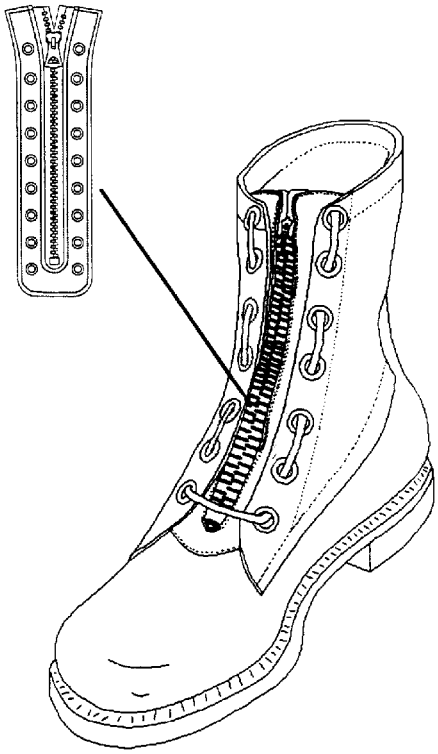

3-25

Figure 3-32. Boot with Slide Fastener Insert

4. Document Place-In-Service Inspection in accordance with COMNAVAIRFORINST 4790.2.

3-376. PREFLIGHT/POSTFLIGHT INSPECTION. The aircrewmember is responsible for Preflight/Postflight Inspection. Preflight/Postflight Inspection consists of a visual inspection for condition of the boots. Inspect in accordance with paragraph 3-377.

3-377. 360-DAY SPECIAL INSPECTION. The Special Inspection shall be performed by organizational level or above upon issue prior to placing in service, and every 360 days thereafter. To conduct the 360-Day Special Inspection proceed as follows:

1. Inspect leather uppers for condition of the leather. Small nicks and scrapes are acceptable but deep cuts, scrapes or gouges in the leather should call for replacement of the boots. This is a very subjective inspection and is up to the discretion of the inspecting facility as to whether the boots need to be replaced because of damage to the upper leather portion of the boot.

2. Inspect sole of the boots for obsessive wear or extremely uneven wearing of the sole. The integrity of the sole is of the utmost importance for both FOD resistance and slip resistant protection. If the leather upper of the boot is still in good condition but the sole is heavily damaged consider having the boot resoled as opposed to completely replacing the boot. See paragraph 3-360 for information pertaining to availability of replacement sole and having the boot resoled.

3. Inspect boots to insure that they are Navy authorized boots with proper identification, e.g. NIIN, Contract Number, Part Number, or manufactures part number. Unauthorized boots that have been open purchased from commercial establishments may not have the proper flame resistance or steel toes and are not authorized. All currently authorized boots are located in this manual. Information on any newly authorized boots for aircrewmen will be distributed to the fleet via Naval message traffic such as the State of the Art Message.

4. Verify condition of boots.

5. Record all maintenance actions and inspections in accordance with COMNAVAIRFORINST 4790.2.

3-378. REPAIRS AND FABRICATIONS.

3-379. Repairs and fabrications shall be performed by the lowest maintenance level possible. Repairs are limited to replacing laces conforming to V-L-61

(NIIN 00-945-3969) and having the sole replaced if desired at a cost of approximately $50.00 (includes shipping). Soles must be replaced with the same exact sole that was originally on the boot from the manufacturer - no substitutes are allowed. NuShoe may not have all of the different types of soles the Navy authorizes so contact them to find out if they have the sole for this particular boot. Information for this service from NuShoe can be found at http://www.nushoe.com/product_lines/navy.htm or by calling toll free 1-877-687-4631 or 4661.

Table 3-29. Aircrew Safety Boot Directives

Description of Modification	Application	Modification Code
Removal of Speedlacing Features from Aircrew Safety Boot	All Aircrew Safety Boots	66-498

Section 3-20. Belleville 800 ST Waterproof Black Safety Toe Flight and Flight Deck Boot

3-380. GENERAL.

3-381. The impact resistant black flyer's boot (Figure 3-33) is designed to protect the aircrewmember's foot against high impact forces.

3-382. CONFIGURATION.

NOTE

Uses newer non-slip compound.

The 340 DES ST does not have a defined heel, making it less likely to snag on ladder rungs but also less secure grip on ladder rungs.

3-383. The upper boot of the black 800 ST is made of full grain leather that is waterproof and very breathable. The boot is 8 inches high when fully laced and is available in sizes 3 through 14 in regular and wide widths. The direct molded sole is constructed of a non-slip, non-marking, jet-fuel resistant rubber and has a Chevron tread. The mid-sole is Vanguard polyurethane, which provides improved cushioning and comfort. The steel toe box is constructed of cold-rolled carbon steel to provide a safety margin through greater compression resistance. The removable cushion insert is 0.180 inches to 0.250 inches thick, providing enhanced comfort.

3-384. APPLICATION.

3-385. The black 800 ST is designed for use by all aircrewmember's. The boot has also been certified as a flight deck boot.

3-386. FITTING.

3-387. The boot is fitted to the aircrewmember and normally corresponds to his/her regular shoe size.

3-388. PROCUREMENT.

3-389. Boots may be procured open purchase from:

Belleville Shoe Mfg. Co.
P.O. Box 508
Belleville, IL 62222
Tel: 800-376-6978 or
618-233-5600
FAX: 618-233-5617
WEB: www.bellevilleshoe.com

Figure 3-33. Belleville 800 ST Black Flyer's Boot

3-390. MODIFICATIONS.

3-391. There are no current directives affecting the Belleville 800 ST Flyer's Boot.

3-392. MAINTENANCE.

NOTE

There are times when the inside of the boot may become damp due to sweating feet. Due to the additional insulation and the waterproof/breathable liner, drying out the boot may require a longer period of time than regular footwear. Placing the boot in a well-ventilated area and opening up the top of the boot should allow it to dry out quickly. Placing the boot neat a high heat source is not recommended since that could damage the boot. Upon issue and periodically thereafter, it is recommended that an additional layer of water sealant be applied to the leather. Products that have been tested and authorized for use include mink oil, silicone spray, or Sno-Seal. These products are available through local sporting goods stores or shoe stores.

3-393. The aircrewmember is responsible for pre/postflight inspection and cleaning of the boots. Maintenance is limited to cleaning and polishing. Polish used for everyday care of the boot is acceptable. Repairs or other maintenance actions required shall be performed by organizational level or above. All maintenance actions/inspections and repairs shall be recorded in accordance with COMNAVAIRFORINST 4790.2.

3-394. INSPECTION.

3-395. The boots shall be subjected to a Place-In-Service Inspection, a Preflight/Postflight Inspection, and a 360-Day Special Inspection.

3-396. PLACE-IN-SERVICE INSPECTION. The boots shall be inspected prior to Place-In-Service. To conduct the Place-In-Service Inspection proceed as follows:

1. Fit boots to aircrewmember using fitting procedures outlined in paragraph 3-386.

2. Perform visual inspection in accordance with paragraph 3-398.

3. Annotate aircrewmember's identification BUNO on the inside of the boots being careful not to cover identifying data for the boot.

4. Document Place-In-Service Inspection in accordance with COMNAVAIRFORINST 4790.2.

3-397. PREFLIGHT/POSTFLIGHT INSPECTION. The aircrewmember is responsible for Preflight/Postflight Inspection. Preflight/Postflight Inspection consists of a visual inspection for condition of the boots. Inspect in accordance with paragraph 3-398.

3-398. 360-DAY SPECIAL INSPECTION. The Special Inspection shall be performed by organizational level or above upon issue prior to placing in service, and every 360 days thereafter. To conduct the 360-Day Special Inspection proceed as follows:

1. Inspect leather uppers for condition of the leather. Small nicks and scrapes are acceptable but deep cuts, scrapes or gouges in the leather should call for replacement of the boots. This is a very subjective inspection and is up to the discretion of the inspecting facility as to whether the boots need to be replaced because of damage to the upper leather portion of the boot.

2. Inspect sole of the boots for obsessive wear or extremely uneven wearing of the sole. The integrity of the sole is of the utmost importance for both FOD resistance and slip resistant protection. If the leather upper of the boot is still in good condition but the sole is heavily damaged consider having the boot resoled as opposed to completely replacing the boot. See paragraph 3-401 for information pertaining to availability of replacement sole and having the boot resoled.

3. Inspect boots to insure that they are Navy authorized boots with proper identification, e.g. NIIN, Contract Number, Part Number, or manufactures part number. Unauthorized boots that have been open purchased from commercial establishments may not have the proper flame resistance or steel toes and are not authorized. All currently authorized boots are located in this manual. Information on any newly authorized boots for aircrewmen will be distributed to the fleet via Naval message traffic such as the State of the Art Message.

4. Verify condition of boots.

5. Record all maintenance actions and inspections in accordance with COMNAVAIRFORINST 4790.2.

3-399. REPAIRS AND FABRICATION.

3-400. Repairs and fabrications shall be performed by the lowest maintenance level possible. Repairs are limited to replacing laces conforming to V-L-61 (NIIN 00-945-3969) and having the sole replaced if desired at a cost of approximately $50.00 (includes shipping). Soles must be replaced with the same exact sole that was originally on the boot from the manufacturer - no substitutes are allowed. NuShoe may not have all of the different types of soles the Navy authorizes so contact them to find out if they have the sole for this particular boot. Information for this service from NuShoe can be found at http://www.nushoe.com/product_lines/navy.htm or by calling toll free 1-877-687-4631 or 4661.

3-401. RESOLE OPTION.

NOTE

Do not wear rubber outsole into polyurethane mid-sole. Resoling is available if the leather and fabric upper is in good condition.

3-402. The resole option is offered by NuShoe and can be open purchased at a cost of approximately $50.00 (includes shipping). Information about this service can be found at http://www.nushoe.com/product_lines/navy.htm or by calling toll free 1-877-687-4631 or 4661.

Section 3-21. Intermediate Cold Weather Safety Toe Boot

3-403. GENERAL.

3-404. The Intermediate Cold Weather Safety Toe Boot (Figure 3-34) is designed to provide insulation and waterproof protection for cold weather conditions as well as provide toe protection against high impact forces. The boot can be worn in a broad range of temperatures depending upon the type of sock and number of layers of socks worn by the aircrewmember.

3-405. CONFIGURATION.

3-406. The boot is constructed of a high quality calfskin leather and is black in color. The boot has insulation, a waterproof/breathable insert and a highly abrasion resistant lining. There is a removable insole that provides cushioning. The insole can also be removed if additional space is needed in the boot when wearing a heavier sock. The steel toe provides a safety margin through greater compression resistance. The steel toe is sandwiched between layers of material and will not conduct cold to the toes. The sole is an anti-FOD design and is made of a non-marking, jet-fuel resistant rubber. The boot is 8 inches high when fully laced.

3-407. APPLICATION.

3-408. The Intermediate Cold Weather Safety Toe Boot is designated for use by all aircrewmembers for pre-flight, post-flight and in-flight operations.

3-409. FITTING.

3-410. The boot is available in sizes 3 Narrow to 14 Extra-Wide. The available sizes and their corresponding stock numbers are listed in Table 3-16. If the aircrewmember is going to wear a heavy sock or layers of socks with this boot, it is recommended that they order a boot one size to one and a half size larger than the boot they normally wear. If there is too much space in the boot, the cushion insole that comes with the boot or a commercial insole can be used to take up the extra space.

Figure 3-34. Intermediate Cold Weather Safety Toe Boot

NOTE

A boot that becomes tight when layers of socks are worn will provide decreased warmth to the user. If the boot is tight in the toe box area, the toes become crammed together resulting in decreased warmth of the foot in the toe area. Removal of the insole will provide some additional space to accommodate a heavier sock or layers of socks.

The stock numbers for the Intermediate Cold Weather Safety Toe Boot are as follows. The first 9 digits of the NSN are 8430-01-451-XXXX. The last four digits are those that correspond to the size as listed in Table 3-30.

3-411. MODIFICATIONS.

3-412. There are no current directives affecting the Intermediate Cold Weather Safety Toe Boot.

3-413. MAINTENANCE.

NOTE

There are times when the inside of the boot may become damp due to sweating feet. Due to the additional insulation and the waterproof/breathable liner, drying out the boot may require a longer period of time than regular footwear. Placing the boot in a well-ventilated area and opening up the top of the boot should allow it to dry out quickly. Placing the boot near a high heat source is not recommended since that could damage the boot.

Upon issue and periodically thereafter, it is recommended that an additional layer of water sealant be applied to the leather. Products that have been tested and authorized for use include mink oil, silicone spray, or Sno-Seal. Theses products are available through local sporting goods stores or shoe stores.

3-414. The aircrewmember is responsible for pre/postflight inspection and cleaning of the boots. Maintenance is limited to cleaning and polishing. Polish used for everyday care of the boot is acceptable. Repairs or other maintenance actions required shall be performed by organizational level or above. All maintenance actions, inspections and repairs shall be recorded in accordance with COMNAVAIRFORINST 4790.2.

3-415. INSPECTION.

3-416. The boots shall be subjected to a Place-In-Service Inspection, a Preflight/Postflight Inspection, and a 360-Day Special Inspection.

3-417. PLACE-IN-SERVICE INSPECTION. The boots shall be inspected prior to Place-In-Service. To conduct the Place-In-Service Inspection proceed as follows:

1. Fit boots to aircrewmember using fitting procedures outlined in paragraph 3-409.

2. Perform visual inspection in accordance with paragraph 3-419.

3. Annotate aircrewmember's identification BUNO on the inside of the boot being careful not to cover identifying data for the boot.

4. Document Place-In-Service Inspection in accordance with COMNAVAIRFORINST 4790.2.

3-418. PREFLIGHT/POSTFLIGHT INSPECTION. The aircrewmember is responsible for Preflight/Postflight Inspection. Preflight/Postflight Inspection consists of a visual inspection for condition of the boots. Inspect in accordance with paragraph 3-419.

3-419. 360-DAY SPECIAL INSPECTION. The Special Inspection shall be performed by organizational level or above upon issue prior to placing in service, and every 360 days thereafter. To conduct the 360-Day Special Inspection proceed as follows:

1. Inspect leather uppers for condition of the leather. Small nicks and scrapes are acceptable but deep cuts, scrapes or gouges in the leather should call for replacement of the boots. This is a very subjective inspection and is up to the discretion of the inspecting facility as to whether the boots need to be replaced because of damage to the upper leather portion of the boot.

2. Inspect sole of the boots for obsessive wear or extremely uneven wearing of the sole. The integrity of the sole is of the utmost importance for both FOD resistance and slip resistant protection. If the leather-upper of the boot is still in good condition but the sole is heavily damaged consider having the boot resoled as opposed to completely replacing the boot. See paragraph 3-421 for information pertaining to availability of replacement sole and having the boot resoled.

Table 3-30. Intermediate Cold Weather Safety Boot Sizes

Size	XXXX	Size	XXXX	Size	XXXX	Size	XXXX
3N	0360	6N	0920	9N	0548	12N	0924
3R	0377	6R	0923	9R	0554	12R	0925
3W	0442	6W	0928	9W	0556	12W	0926
3XW	0452	6XW	0930	9XW	0558	12XW	0929
3 1/2 N	0463	6 1/2 N	0933	9 1/2 N	0561	12 1/2 N	0931
3 1/2 R	0481	6 1/2 R	0935	9 1/2 R	0567	12 1/2 R	0932
3 1/2 W	0486	6 1/2 W	0386	9 1/2 W	0571	12 1/2 W	0934
3 1/2 XW	0523	6 1/2 XW	0440	9 1/2 XW	0574	12 1/2 XW	0937
4N	0525	7N	0450	10N	0576	13N	0939
4R	0533	7R	0454	10R	0578	13R	0941
4W	0539	7W	0461	10W	0581	13W	1170
4XW	0547	7XW	0474	10XW	0584	13XW	1174
4 1/2 N	0563	7 1/2 N	0477	10 1/2 N	0583	13 1/2 N	1176
4 1/2 R	0566	7 1/2 R	0479	10 1/2 R	0623	13 1/2 R	1180
4 1/2 W	0573	7 1/2 W	0482	10 1/2 W	0836	13 1/2 W	1181
4 1/2 XW	0774	7 1/2 XW	0485	10 1/2 XW	0942	13 1/2 XW	1184
5N	0780	8N	0489	11N	1182	14N	1186
5R	0784	8R	0495	11R	1185	14R	1194
5W	0788	8W	0496	11W	1188	14W	1229
5XW	0805	8XW	0498	11XW	1191	14XW	1261
5 1/2 N	0811	8 1/2 N	0528	11 1/2 N	1193		
5 1/2 R	0898	8 1/2 R	0531	11 1/2 R	1196		
5 1/2 W	0911	8 1/2 W	0537	11 1/2 W	1197		
5 1/2 XW	0916	8 1/2 XW	0544	11 1/2 XW	1199		

3. Inspect boots to insure that they are Navy authorized boots with proper identification, e.g. NIIN, Contract Number, Part Number, or manufactures part number. Unauthorized boots that have been open purchased from commercial establishments may not have the proper flame resistance or steel toes and are not authorized. All currently authorized boots are located in this manual. Information on any newly authorized boots for aircrewmen will be distributed to the fleet via Naval message traffic such as the State of the Art Message.

4. Verify condition of boots.

5. Record all maintenance actions and inspections in accordance with COMNAVAIRFORINST 4790.2.

3-420. REPAIRS AND FABRICATIONS.

3-421. Repairs and fabrications shall be performed by the lowest maintenance level possible. Repairs are limited to replacing laces conforming to V-L-61 (NIIN 00-945-3969) and having the sole replaced if desired at a cost of approximately $50.00 (includes shipping). Soles must be replaced with the same exact sole that was originally on the boot from the manufacturer - no substitutes are allowed. NuShoe may not have all of the different types of soles the Navy authorizes so contact them to find out if they have the sole for this particular boot. Information for this service from NuShoe can be found at http://www.nushoe.com/product_lines/navy.htm or by calling toll free 1-877-687-4631 or 4661.

Section 3-22. Desert Tan Flyer's Boot (Belleville 330 DES ST)

3-422. GENERAL.

3-423. The impact resistant desert tan flyer's boot (Figure 3-35) is designed to protect the aircrewmember's foot against high impact forces.

3-424. CONFIGURATION.

3-425. The upper boot of the desert tan 330 DES ST is made of both a suede finish leather and WT-2™ flight approved fabric that is flame resistant, water resistant and very breathable. The boot is 8 inches high when fully laced and is available in sizes 3 through 14 in Regular and Wide widths. The direct molded sole is constructed of a non-slip, non-marking, jet-fuel resistant rubber and has a Chevron tread. The midsole is Vanguard polyurethane, which provides improved cushioning and comfort. The steel toe box is constructed of cold-rolled carbon steel to provide a safety margin through greater compression resistance. The removable cushion insert is 0.180 inches to 0.250 inches thick, providing enhanced comfort. The available sizes and their corresponding stock numbers are listed in Table 3-31.

3-426. APPLICATION.

3-427. The desert tan 330 DES ST is designed for use by all aircrew in hot weather environments.

3-428. FITTING.

3-429. The boot is fitted to the aircrewmember and normally corresponds to his/her regular shoe size.

Figure 3-35. Desert Tan Flyer's Boot

3-430. PROCUREMENT.

3-431. Belleville 330 DES ST Flyer's Boot can be open purchased directly from Belleville:

Belleville Shoe Mfg. Co.
P.O. Box 508
Belleville, IL 62222
Tel: (800)-376-6978
(618)-233-5600
FAX: (618) 233-5617
WEB: http://www.bellevilleshoe.com

3-432. MODIFICATIONS.

3-433. There are no current directives affecting the Belleville 330 DES ST Desert Tan Flyer's Boot.

3-434. MAINTENANCE.

3-435. The aircrewmember is responsible for pre/postflight inspection and cleaning of the boots. Maintenance is limited to cleaning only. Repairs or other maintenance actions required shall be performed by organizational level or above. All maintenance actions, inspections and repairs shall be recorded in accordance with COMNAVAIRFORINST 4790.2.

3-436. INSPECTION.

3-437. The boots shall be subjected to a Place-In-Service Inspection, a Preflight/Postflight Inspection, and a 360-Day Special Inspection.

3-438. PLACE-IN-SERVICE INSPECTION. The boots shall be inspected prior to Place-In-Service. To conduct the Place-In-Service Inspection proceed as follows:

1. Fit boots to aircrewmember using fitting procedures outlined in paragraph 3-428.

2. Perform visual inspection in accordance with paragraph 3-440.

3. Annotate aircrewmember's identification BUNO on the inside of the boot being careful not to cover identifying data for the boot.

4. Document Place-In-Service Inspection in accordance with COMNAVAIRFORINST 4790.2.

Table 3-31. Belleville 330 ST Boot Size and NSN's

Size	NSN
3 Regular	8430-01-547-3722
3 Wide	8430-01-547-3727
3.5 Regular	8430-01-547-3744
3.5 Wide	8430-01-547-3745
4 Regular	8430-01-547-3751
4 Wide	8430-01-547-3758
4.5 Regular	8430-01-547-3762
4.5 Wide	8430-01-547-4986
5 Regular	8430-01-547-4989
5 Wide	8430-01-547-5009
5.5 Regular	8430-01-547-5015
5.5 Wide	8430-01-547-5017
6 Regular	8430-01-547-5020
6 Wide	8430-01-547-5022
6.5 Regular	8430-01-547-5028
6.5 Wide	8430-01-547-5030
7 Regular	8430-01-547-5034
7 Wide	8430-01-547-5036
7.5 Regular	8430-01-547-5039
7.5 Wide	8430-01-547-5043
8 Regular	8430-01-547-5051
8 Wide	8430-01-547-5059
8.5 Regular	8430-01-547-5062
8.5 Wide	8430-01-547-5065
9 Regular	8430-01-547-5068
9 Wide	8430-01-547-5072
9.5 Regular	8430-01-547-5093
9.5 Wide	8430-01-547-5096
10 Regular	8430-01-547-5097
10 Wide	8430-01-547-5099
10.5 Regular	8430-01-547-5101
10.5 Wide	8430-01-547-5107
11 Regular	8430-01-547-5344
11 Wide	8430-01-547-5356
11.5 Regular	8430-01-547-5367
11.5 Wide	8430-01-547-5373
12 Regular	8430-01-547-5379
12 Wide	8430-01-547-5425
13 Regular	8430-01-547-5430
13 Wide	8430-01-547-5434
14 Regular	8430-01-547-5436
14 Wide	8430-01-547-5439

3-439. PREFLIGHT/POSTFLIGHT INSPECTION. The aircrewmember is responsible for Preflight/Postflight Inspection. Preflight/Postflight Inspection consists of a visual inspection for condition of the boots. Inspect in accordance with paragraph 3-440.

3-440. 360-DAY SPECIAL INSPECTION. The Special Inspection shall be performed by organizational level or above upon issue prior to placing in service, and every 360 days thereafter. To conduct the 360-Day Special Inspection proceed as follows:

1. Inspect leather/fabric uppers for condition. Small nicks and scrapes are acceptable but deep cuts, scrapes or gouges in the leather/fabric should call for replacement of the boots. This is a very subjective inspection and is up to the discretion of the inspecting facility as to whether the boots need to be replaced because of damage to the upper leather/fabric portion of the boot.

2. Inspect sole of the boots for obsessive wear or extremely uneven wearing of the sole. The integrity of the sole is of the utmost importance for both FOD resistance and slip resistant protection. If the leather/fabric upper of the boot is still in good condition but the sole is heavily damaged consider having the boot resoled as opposed to completely replacing the boot. See paragraph 3-444 for information pertaining to availability of replacement sole and having the boot resoled.

3. Inspect boots to insure that they are Navy authorized boots with proper identification, e.g. NIIN, Contract Number, Part Number, or manufactures part number. Unauthorized boots that have been open purchased from commercial establishments may not have the proper flame resistance or steel toes and are not authorized. All currently authorized boots are located in this manual. Information on any newly authorized boots for aircrewmen will be distributed to the fleet via Naval message traffic such as the State of the Art Message.

4. Verify condition of boots.

5. Record all maintenance actions and inspections in accordance with COMNAVAIRFORINST 4790.2.

3-441. CLEANING.

3-442. To clean the 330 DES ST Desert Tan Flyer's Boot proceed as follows:

1. Brush mud and excessive dust off leather. The leather has a suede finish and is not designed to be polished.

2. Upper fabric should be cleaned with a soft nylon bristle brush and warm water. Do not apply polish to the upper fabric; this will reduce the breathability of the boot.

3-443. REPAIRS AND FABRICATIONS.

3-444. Repairs and fabrications shall be performed by the lowest maintenance level possible. Repairs are limited to replacing laces conforming to V-L-61 (NIIN 00-945-3969) and having the sole replaced if desired at a cost of approximately $50.00 (includes shipping). Soles must be replaced with the same exact sole that was originally on the boot from the manufacturer - no substitutes are allowed. NuShoe may not have all of the different types of soles the Navy authorizes so contact them to find out if they have the sole for this particular boot. Information for this service from NuShoe can be found at http://www.nushoe.com/product_lines/navy.htm or by-calling toll free 1-877-687-4631 or 4661.

3-445. RESOLE OPTION.

NOTE

Do not wear rubber outsole into polyurethane midsole. Resoling is available if the leather and fabric upper is in good condition.

3-446. The resole option is offered by NuShoe and can be open purchased at a cost of approximately $50.00 (includes shipping). Information about this service can be found at http://www.nushoe.com/product_lines/navy.htm or by calling toll free 1-877-687-4631 or 4661.

Section 3-23. Belleville 340 DES ST Hot Weather Safety Toe Flight Boot

3-447. GENERAL.

3-448. The impact resistant 340 DES ST flyer's boot (Figure 3-36) is designed to protect the aircrewmember's foot against high impact forces.

3-449. CONFIGURATION.

NOTE

Uses newer non-slip compound.

The 340 DES ST does not have a defined heel, making it less likely to snag on ladder rungs but also less secure grip on ladder rungs.

3-450. The upper boot of the 340 DES ST is made of tan leather/NOMEX blended flame resistant fabric. The boot is 8 inches high when fully laced and is available in sizes 3 through 11 in half sizes and 12, 13 and 14 in whole sizes. The available sizes and their corresonding stock numbers are listed in Table 3-32. The direct molded sole is constructed of a non-slip, non-marking, jet-fuel resistant nitrile rubber outsole with a Chevron tread. The mid-sole is Vanguard polyurethane, which provides improved cushioning and comfort. The steel toe box is constructed of cold-rolled carbon steel to provide a safety margin through greater compression resistance. The lining is X-Static anti-microbial, odor reducing lining. The removable cushion insert is 0.180 inches to 0.250 inches thick polyurethane, providing enhanced comfort.

3-451. APPLICATION.

3-452. The 340 DES ST is designed for use by all aircrewmember's.

3-453. FITTING.

3-454. The boot is fitted to the aircrewmember and normally corresponds to his/her regular shoe size.

Figure 3-36. Belleville 340 DES ST Hot Weather Safety Toe Flight Boot

Table 3-32. Belleville 340 DES ST Hot Weather Safety Toe Flight Boot

Size	NSN
3 Regular	8430-01-547-0425
3 Wide	8430-01-547-0430
3.5 Regular	8430-01-547-0435
3.5 Wide	8430-01-547-0438
4 Regular	8430-01-547-0450
4 Wide	8430-01-547-0454
4.5 Regular	8430-01-547-0462
4.5 Wide	8430-01-547-0470
5 Regular	8430-01-547-0482
5 Wide	8430-01-547-0485
5.5 Regular	8430-01-547-0492
5.5 Wide	8430-01-547-0500
6 Regular	8430-01-547-0514
6 Wide	8430-01-547-0517
6.5 Regular	8430-01-547-0522
6.5 Wide	8430-01-547-0536
7 Regular	8430-01-547-0557
7 Wide	8430-01-547-0549
7.5 Regular	8430-01-547-0555
7.5 Wide	8430-01-547-0570
8 Regular	8430-01-547-0575
8 Wide	8430-01-547-0580
8.5 Regular	8430-01-547-0582
8.5 Wide	8430-01-547-0593
9 Regular	8430-01-547-0606
9 Wide	8430-01-547-0612
9.5 Regular	8430-01-547-2281
9.5 Wide	8430-01-547-2273
10 Regular	8430-01-547-2275
10 Wide	8430-01-547-2283
10.5 Regular	8430-01-547-2286
10.5 Wide	8430-01-547-2290
11 Regular	8430-01-547-2294
11 Wide	8430-01-547-2309
11.5 Regular	8430-01-547-2360
11.5 Wide	8430-01-547-2361
12 Regular	8430-01-547-2364
12 Wide	8430-01-547-2378
13 Regular	8430-01-547-2381
13 Wide	8430-01-547-2383
14 Regular	8430-01-547-2385
14 Wide	8430-01-547-2389

3-455. PROCUREMENT.

3-456. Boots may be procured open purchase from:
Belleville Shoe Mfg. Co.
P.O. Box 508
Belleville, IL 62222
Tel: 800-376-6978 or
618-233-5600
FAX: 618-233-5617
WEB: www.bellevilleshoe.com

3-457. MODIFICATIONS.

3-458. There are no current directives affecting the Belleville 340 DES ST Flyer's Boot.

3-459. MAINTENANCE.

3-460. The aircrewmember is responsible for pre/post-flight inspection and cleaning of the boots. Maintenance is limited to cleaning only. Repairs or other maintenance actions required shall be performed by organizational level or above. All maintenance actions, inspections and repairs shall be recorded in accordance with COMNAVAIRFORINST 4790.2.

3-461. INSPECTION.

3-462. The boots shall be subjected to a Place-In-Service Inspection, a Preflight/Postflight Inspection, and a 360-Day Special Inspection.

3-463. PLACE-IN-SERVICE INSPECTION. The boots shall be inspected prior to Place-In-Service. To conduct the Place-In-Service Inspection proceed as follows:

1. Fit boots to aircrewmember using fitting procedures outlined in paragraph 3-453.

2. Perform visual inspection in accordance with paragraph 3-465.

3. Annotate aircrewmember's identification BUNO on the inside of the boot being careful not to cover identifying data for the boot.

4. Document Place-In-Service Inspection in accordance with COMNAVAIRFORINST 4790.2.

3-464. PREFLIGHT/POSTFLIGHT INSPECTION. The aircrewmember is responsible for Preflight/Postflight Inspection. Preflight/Postflight Inspection consists of a visual inspection for condition of the boots. Inspect in accordance with paragraph 3-465.

3-465. 360-DAY SPECIAL INSPECTION. The Special Inspection shall be performed by organizational level or above upon issue prior to placing in service, and every 360 days thereafter. To conduct the 360-Day Special Inspection proceed as follows:

1. Inspect leather/fabric uppers for condition. Small nicks and scrapes are acceptable but deep cuts, scrapes or gouges in the leather/fabric should call for replacement of the boots. This is a very subjective inspection and is up to the discretion of the inspecting facility as to whether the boots need to be replaced because of damage to the upper leather/fabric portion of the boot.

2. Inspect sole of the boots for obsessive wear or extremely uneven wearing of the sole. The integrity of the sole is of the utmost importance for both FOD resistance and slip resistant protection. If the leather/fabric upper of the boot is still in good condition but the sole is heavily damaged consider having the boot resoled as opposed to completely replacing the boot. See paragraph 3-470 for information pertaining to availability of replacement sole and having the boot resoled.

3. Inspect boots to insure that they are Navy authorized boots with proper identification, e.g. NIIN, Contract Number, Part Number, or manufactures part number. Unauthorized boots that have been open purchased from commercial establishments may not have the proper flame resistance or steel toes and are not authorized. All currently authorized boots are located in this manual. Information on any newly authorized boots for aircrewmen will be distributed to the fleet via Naval message traffic such as the State of the Art Message.

4. Verify condition of boots.

5. Record all maintenance actions and inspections in accordance with COMNAVAIRFORINST 4790.2.

3-466. CLEANING.

3-467. To clean the 330 DES ST Desert Tan Flyer's Boot proceed as follows:

1. Brush mud and excessive dust off leather. The leather has a suede finish and is not designed to be polished.

2. Upper fabric should be cleaned with a soft nylon bristle brush and warm water. Do not apply polish to the upper fabric; this will reduce the breathability of the boot.

3-468. REPAIRS AND FABRICATIONS.

3-469. Repairs and fabrications shall be performed by the lowest maintenance level possible. Repairs are limited to replacing laces conforming to V-L-61 (NIIN 00-945-3969) and having the sole replaced if desired at a cost of approximately $50.00 (includes shipping).

3-470. RESOLE OPTION.

NOTE

Do not wear rubber outsole into polyurethane mid-sole. Resoling is available if the leather and fabric upper is in good condition.

3-471. The resole option is offered by NuShoe and can be open purchased at a cost of approximately $50.00 (includes shipping). Information about this service can be found at http://www.nushoe.com/product_lines/navy.htm or by calling toll free 1-877-687-4631 or 4661.

Section 3-24. All Weather Sock System

3-472. GENERAL.

3-473. The all weather sock system (Figure 3-37) is designed for use in all temperatures. It will be especially applicable in moderate to extreme cold conditions but can also be used in hot weather.

3-474. CONFIGURATION.

3-475. The sock system is designed as two layers worn together to provide optimum insulation and comfort. The first layer is a wicking (liner) sock worn next to the foot. This sock is constructed from fibers that will wick perspiration away from the foot and into an outer layer, thereby keeping moisture off the foot. The liner sock is available in 5 sizes, extra-extra-small through large (Table 3-33), and color of the liner sock is black. The heavyweight sock provides thermal protection from cold and heat. This sock is worn with the loops on the outside, giving the appearance of being worn inside out. The sock is make of 50% wool/50% polypropylene, is available in 7 sizes, 9 through 15 (Table 3-33), and is natural in color.

3-476. APPLICATION.

3-477. The socks are designated for use by all aircrewmembers. Boots worn with this sock system may need to be 1 to 1 1/2 sizes larger than the typical size worn by the aircrew to accommodate the additional bulk. Aircrew boot allowance has been increased for this reason. If the boot is a tight fit overtop the sock system, the insulation properties will not be as effective.

3-478. FITTING.

3-479. The liner sock is available in sizes extra-extra-small through large. These sizes are the same as dress sock sizes. The liner sock will stretch. The heavy weight sock is available in sizes 9 through 15. These sizes are similar to extra-extra-small through extra-extra-large. The heavy weight sock does not stretch as much as the liner sock.

3-480. MODIFICATIONS.

3-481. There are no current directives affecting this equipment at this time.

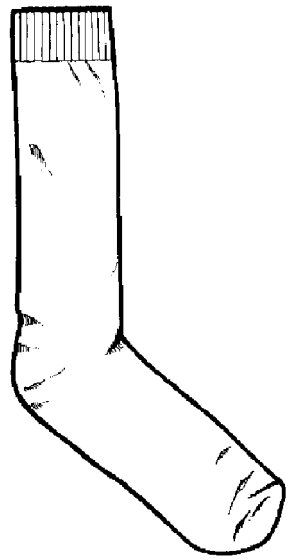

WICKING SOCK

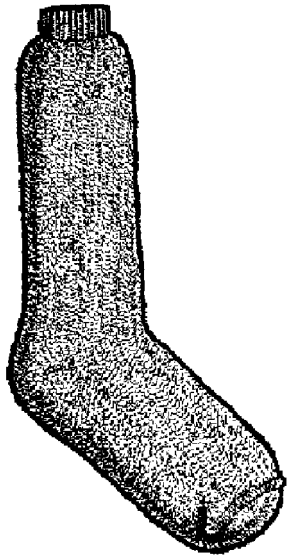

HEAVYWEIGHT SOCK

3-35

Figure 3-37. All Weather Sock System

3-482. MAINTENANCE.

3-483. The aircrewmember is responsible for pre/post-flight inspection and cleaning. Repairs or other maintenance actions required shall be performed by organizational level or above. All maintenance actions, inspections and repairs shall be recorded in accordance with COMNAVAIRFORINST 4790.2.

Table 3-33. Sizing Guide (All Weather Sock System)

Nomenclature	Size	NIIN
Wicking Sock	Extra Extra Small (3-7) Extra Small (7-9) Small (9-11) Medium (10-13) Large (13-15)	01-415-0051 01-415-0056 01-415-5895 01-415-0074 01-415-0078
Heavyweight Sock	Extra Extra Small (9) Extra Small (10) Small (11) Medium (12) Large (13) Extra Large (14) Extra Extra Large (15)	01-442-2157 01-442-2154 01-442-2155 01-442-2467 01-442-2466 01-442-2465 01-442-2464

3-484. INSPECTION.

3-485. The all weather sock shall be subjected to a Place-In-Service Inspection, a Preflight/Postflight Inspection, and a 360-Day Special Inspection.

3-486. PLACE-IN-SERVICE INSPECTION. The all weather sock shall be inspected prior to Place-In-Service. To conduct the Place-In-Service Inspection proceed as follows:

1. Fit assembly to aircrewmember using fitting procedures outlined in paragraph 3-478.

2. Perform visual inspection in accordance with paragraph 3-488.

3. Annotate aircrewmember's identification BUNO on the tag of the socks being careful not to cover identifying data for the socks (such as NIIN).

4. Document Place-In-Service Inspection in accordance with COMNAVAIRFORINST 4790.2.

3-487. PREFLIGHT/POSTFLIGHT INSPECTION. The aircrewmember is responsible for Preflight/Postflight Inspection. Preflight/Postflight Inspection consists of a visual inspection for condition of the socks. Inspect in accordance with paragraph 3-488.

3-488. 360-DAY SPECIAL INSPECTION. The Special Inspection shall be performed by organizational level or above upon issue prior to placing in service, and every 360 days thereafter. To conduct the 360-Day Special Inspection proceed as follows:

1. Inspect for holes, cuts, tears and runs.

2. Inspect for open seams.

3. Verify the condition of the socks.

4. Inspect sock to insure that it is a Navy authorized garment with proper identification, e.g. NIIN, Contract Number, Part Number etc. All weather socks that have been open purchased from commercial establishments may not have the proper flame resistance and are not authorized.

5. Document inspection in accordance with COMNAVAIRFORINST 4790.2.

3-489. CLEANING. Launder the socks as follows:

CAUTION

Do not use bleaching compound. Do not use softener in either the washer or the dryer.

1. To launder the liner sock: Machine wash in warm water. Tumble dry warm.

2. To launder the heavyweight sock: Machine wash in warm water. Tumble dry low.

3-490. REPAIRS. No repair is authorized. Worn/torn socks shall be replaced.

Section 3-25. Insulating Insoles

3-491. GENERAL.

3-492. The insulating insoles (Figure 3-38) are designed to provide additional warmth and cushioning when worn in cold and extreme cold environments

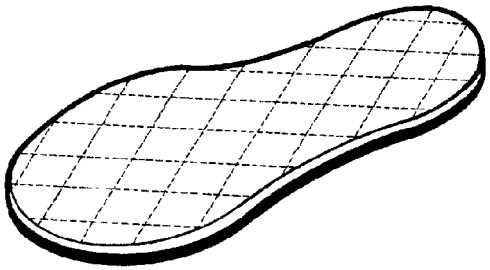

3-37

Figure 3-38. Insulating Insole

3-493. CONFIGURATION.

3-494. The insulating insoles are made of three layers: the first layer is Cambrelle, a nylon fiber that absorbs moisture; the second layer is a thin insulation that is quilted to the Cambrelle; and the third layer is neoprene rubber that acts as a shock absorber and cushions the wearer's feet while providing additional insulation from the cold.

3-495. APPLICATION.

3-496. The insoles are designated for use by all aircrewmembers. They can be used in any boot. The insoles are available in two different thicknesses and are trimmed to fit the aircrewmembers boot. They can be used in place of the regular boot insole and/or take up additional space in a boot if it is oversized to accommodate heavier socks that are not being worn. It also helps prevent the foot from sliding around in an oversized boot.

NOTE

A recommended source for insulating insoles is: Sure Foot Corporation, P.O. Box 40, Grand Forks, ND 58208; 1-800-722-3668. Product name: Insulator Insoles; part numbers are as follows: 2013 (1/4″ thick), 2014 (3/8″ thick), 2020 (ladies 3-6, 1/4″ thick), 2030 (ladies 7-8, 1/4″ thick), 2040 (ladies 9-10, 1/4″ thick).

3-497. FITTING.

3-498. The insoles can be fit to the boot of the indi-vidual aircrewmember by cutting them to size. Remove the insole currently in the boot or use the pattern that comes with the insole and trace around it onto paper. Cut out the tracing and check the pattern by fitting the tracing into the boot to assure a snug and proper fit. Remove pattern when properly fit and use as a template to cut insole to proper size. Turn template over for other boot.

3-499. MODIFICATIONS.

3-500. There are no current directives affecting this equipment at this time.

3-501. MAINTENANCE.

3-502. The aircrewmember is responsible for pre/postflight inspection and cleaning. Repairs or other maintenance actions required shall be performed by organizational level or above. All maintenance actions, inspections and repairs shall be recorded in accordance with COMNAVAIRFORINST 4790.2.

3-503. INSPECTION.

3-504. The Insulating Insoles shall be subjected to a Place-In-Service Inspection, a Preflight/Postflight Inspection, and a 360-Day Special Inspection.

3-505. PLACE-IN-SERVICE INSPECTION. The Insulating Insoles shall be inspected prior to Place-In-Service. To conduct the Place-In-Service Inspection proceed as follows:

1. Fit assembly to aircrewmember using fitting procedures outlined in paragraph 3-497.

2. Perform visual inspection in accordance with paragraph 3-507.

3. Annotate aircrewmember's identification BUNO on the tag of the insoles being careful not to cover identifying data for the insoles (such as NIIN).

4. Document Place-In-Service Inspection in accordance with COMNAVAIRFORINST 4790.2.

3-506. PREFLIGHT/POSTFLIGHT INSPECTION. The aircrewmember is responsible for Preflight/Postflight Inspection. Preflight/Postflight Inspection consists of a visual inspection for condition of the insoles. Inspect in accordance with paragraph 3-507.

3-507. 360-DAY SPECIAL INSPECTION. The Special Inspection shall be performed by organizational level or above upon issue prior to placing in service, and every 360 days thereafter. To conduct the 360-Day Special Inspection proceed as follows:

1. Inspect fabric and neoprene for cuts, tears, holes and abrasions.

2. Inspect insoles to insure that it is a Navy authorized insoles with proper identification, e.g. NIIN, Contract Number, Part Number etc. Insoles that have been open purchased from commercial establishments may not have the proper flame resistance and are not authorized.

3. Verify condition of the insoles.

4. Document in accordance with COMNAVAIRFORINST 4790.2.

3-508. CLEANING.

1. Machine wash with mild soap in warm water, not over 120°F. Rinse thoroughly.

2. Tumble dry low.

Section 3-26. Slip Protectors

3-509. GENERAL.

3-510. The slip protectors (Figure 3-39) are designed to slip over the sole of the boot to provide better traction on snow and ice. They are for use only outside of the aircraft and stowed in a pocket during flight.

3-511. CONFIGURATION.

3-512. The slip protectors are available from commercial sources in slightly differing configurations. They are made of rubber with small steel spikes surrounded by plastic washers either in the toe or in the toe and heel area. On some products the steel spikes are replaceable. The spikes dig into the snow or ice to provide traction.

NOTE

See Table 3-34 for recommended procurement sources.

3-513. APPLICATION.

3-514. The slip protectors are designated for use by all aircrewmembers. The slip protectors are available in varying sizes to fit different boot sizes. Check with the manufacturer for appropriate sizes.

3-515. MODIFICATIONS.

3-516. There are no current directives affecting this equipment at this time.

3-517. MAINTENANCE.

3-518. The aircrewmember is responsible for pre/postflight inspection and cleaning. Repairs or other maintenance actions required shall be performed by organizational level or above. All maintenance actions, inspections and repairs shall be recorded in accordance with COMNAVAIRFORINST 4790.2.

3-519. INSPECTION.

3-520. The slip protectors shall be subjected to a Place-In-Service Inspection, a Preflight/Postflight Inspection and a 360-Day Special Inspection.

3-521. PLACE-IN-SERVICE INSPECTION. The slip protectors shall be inspected prior to Place-In-Service. To conduct the Place-In-Service Inspection proceed as follows:

1. Perform visual inspection in accordance with paragraph 3-523.

2. Annotate aircrewmember's identification BUNO on the tag of the slip protector being careful not to cover identifying data for the garment (such as NIIN).

3. Document Place-In-Service Inspection in accordance with COMNAVAIRFORINST 4790.2.

3-522. PREFLIGHT/POSTFLIGHT INSPECTION. The aircrewmember is responsible for Preflight/Postflight Inspection. Preflight/Postflight Inspection consists of a visual inspection for condition of the slip protector. Inspect in accordance with Paragraph 3-523.

3-523. 360-DAY SPECIAL INSPECTION. The Special Inspection shall be performed by organizational level or above upon issue prior to placing in service, and every 360 days thereafter. To conduct the 360-Day Special Inspection proceed as follows:

1. Inspect slip protector for cuts, tears, degradation of the rubber.

2. Inspect for missing spikes, worn down spikes.

3. Replace broken or missing spikes if applicable for the product in accordance with manufacturers instructions. To obtain replacement spikes contact manufacturer.

4. Inspect slip protector to insure that it is a Navy authorized slip protector with proper identification, e.g. NIIN, Contract Number, Part Number etc. Slip protectors that have been open purchased from commercial establishments may not have the proper flame resistance and are not authorized.

5. Verify condition of the slip protectors.

6. Document in accordance with COMNAVAIRFORINST 4790.2.

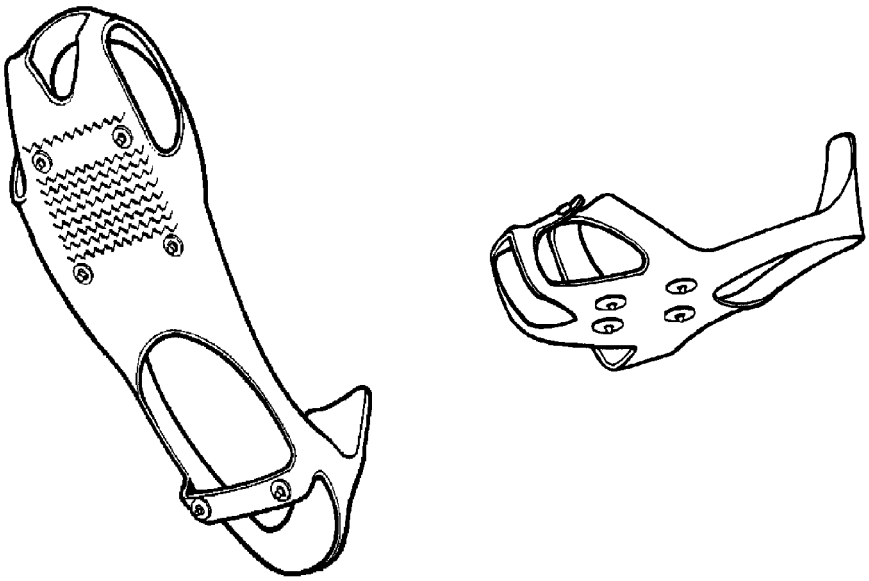

3-38

Figure 3-39. Slip Protectors

Table 3-34. Recommended Sources for Slip Protectors

Source	Product Name	Part Number	Size
G.W. Russel & Assoc., 1536 Walnut Street, Allentown, PA 18102, 610-433-0875 GSA Contract No. 830-BP-999-0067	Spiky Slip Protector	Part No. 103, Toe Model Part No. 104, Heel and Toe Model	Small (to boot size 6) Medium (7-9) Large (10-11) 3-Large (11+) Small (to boot size 6) Medium/Large (7-11) 3-Large (11+)
Sure Foot Corp., P.O. Box 40, Grand Forks, ND 58208, 1-800-722-3668	Ice Jogger or Get-A-Grip, (same product sold under different names)		3-Small (womens 3-6) Small/Medium (mens 5 3-8, womens 6-9) Large (mens 8+, womens 9+)

Section 3-27. GS/FRP-2 Fire-Resistant Flyer's Gloves

3-524. GENERAL.

3-525. The fire-resistant flyer's glove (MIL-G-81188) (Figure 3-40) is designated for use in warm to moderate temperature zones and provides protection in the event of aircraft fire.

3-526. CONFIGURATION.

3-527. The gloves are snug fitting and are designed to provide maximum dexterity and sense of touch and not interfere with the operation of the aircraft and use of survival equipment. The gloves are available in sizes 4 to 12. Since the fabric is stretchable, this range of sizes will accommodate any hand. The gloves are constructed of soft cabretta gray leather (palm and front portion of fingers) and a stretchable, sage green and desert tan, light-weight knit aramid fabric (entire back of hand). The cloth portion of the gloves does not melt or drip and will not support combustion. The fabric will begin to char at 700°F to 800°F.

3-528. APPLICATION.

3-529. The gloves are designated for use by all aircrewmembers and are to be used only for inflight operations. Work gloves, such as the pre-flight gloves listed in Section 3-33, should be used for all other dirty or heavy work functions.

Figure 3-40. Fire-Resistant Flyer's Gloves

3-530. FITTING.

3-531. The fire-resistant flyer's gloves normally correspond to the aircrewmember's glove size. Gloves are available in sizes 4 to 12. Determine the proper size glove on a trial fit basis. The glove must fit snugly.

3-532. MODIFICATIONS.

3-533. There are no current directives affecting the Flyer's Gloves.

3-534. MAINTENANCE.

3-535. The aircrewmember is responsible for pre/postflight inspection and cleaning. Repairs or other maintenance actions required shall be performed by organizational level or above. All maintenance actions, inspections and repairs shall be recorded in accordance with COMNAVAIRFORINST 4790.2.

3-536. INSPECTION.

3-537. The gloves shall be subjected to a Place-In-Service Inspection, a Preflight/Postflight Inspection, and a 360-Day Special Inspection.

3-538. PLACE-IN-SERVICE INSPECTION. The gloves shall be inspected prior to Place-In-Service. To conduct the Place-In-Service Inspection proceed as follows:

1. Fit gloves to aircrewmember using fitting procedures outlined in paragraph 3-530.

2. Perform visual inspection in accordance with paragraph 3-540.

3. Annotate aircrewmember's identification BUNO on the inside of both gloves being careful not to cover identifying data (such as NIIN).

4. Document Place-In-Service Inspection in accordance with COMNAVAIRFORINST 4790.2.

3-539. PREFLIGHT/POSTFLIGHT INSPECTION. The aircrewmember is responsible for Preflight/Postflight Inspection. Preflight/Postflight Inspection consists of a visual inspection for condition of the gloves. Inspect in accordance with paragraph 3-540.

3-540. 360-DAY SPECIAL INSPECTION. The Special Inspection shall be performed by organizational level or above upon issue prior to placing in service, and every 360 days thereafter. To conduct the 360-Day Special Inspection proceed as follows:

1. Inspect fabric for cuts, tears and abrasions.

2. Inspect stitching for holes and tears.

3. Inspect gloves to insure that they are Navy authorized gloves with proper identification, e.g. NIIN, Contract Number, Part Number, etc. Fire resistant flyer's gloves that have been open purchased from commercial establishments may not have the proper flame resistance and are not authorized.

4. Verify condition of gloves.

5. Record all maintenance actions and inspections in accordance with COMNAVAIRFORINST 4790.2.

3-541. CLEANING. Launder the gloves as follows:

CAUTION

Do not use bleaching compound.

1. Don gloves and wash with mild soap in water not over 120°F as if washing hands. When gloves are clean, rinse and remove from hands. Squeeze, but do not wring gloves to remove excess water.

2. After removing excess water, place gloves flat on towel and roll towel to cover gloves. Ensure gloves do not contact each other and are not exposed to hot air or sunlight.

3-542. REPAIRS. Repair of flyer's gloves is limited to restitching seams.

Section 3-28. MAX GRIP NT “DIGI” Leather Flight Glove

3-543. GENERAL.

3-544. The MAX Grip NT ”DIGI” leather flight glove is (Figure 3-41) is designated for use in warm to moderate temperature zones and provides protection in the event of aircraft fire.

3-545. CONFIGURATION.

3-546. The gloves are snug fitting and are designed to provide maximum dexterity and sense of touch and not interfere with the operation of the aircraft and use of survival equipment. The gloves are constructed of simplex NOMEX IIIA knit top and sleeve, digitally textured leather palm, fingers and knuckles made of extra durable, soft military grade leather for high abrasion resistance, superior fits and excellent finger dexterity. The glove has an adjustable wristband with hook and pile closure. The glove has seamless index finger, elasticized wrist strap and 10cm gauntlet. The Max Grip NT flight glove is compatible with water survival procedures and equipment. The glove passes NFPA 1971 flame resistance testing. The MAX Grip NT flight glove provides increased wet and dry tactility and is slightly thicker/warmer than standard flight glove GS-FRP. The MAX Grip NT flight glove comes in three colors; sage green Nomex top and black leather palm, all black and all tan. (Table 3-35)

3-547. APPLICATION.

3-548. Alternative flight glove to the standard GS-FRP/2 flight glove. The gloves are designated for use by all aircrewmembers and are to be used only for inflight operations. Work gloves, such as the pre-flight gloves listed in Section 3-33, should be used for all other dirty or heavy work functions.

3-549. FITTING.

3-550. The MAX Grip NT ”DIGI” flight glove is available in sizes small, medium, large, X-large and XX-large. Since the fabric is stretchable, this range of sizes will accommodate any hand. Determine the proper size glove on a trial fit basis. The glove must fit snugly.

3-551. PROCUREMENT.

3-552. The MAX Grip NT ”DIGI” Leather Flight Glove is an open purchase item which costs approximately $60.00 each. Shipping: No Cost. USPS for APO addresses. UPS for CONUS

Source: Southwest Motorsports
2235 E Rose Garden Loop
Phoenix, AZ 85024
Phone: (888) 493-3615
Fax: (602) 493-3621
Web: http://www.southwestmotorsports.com

Figure 3-41. MAX GRIP NT “DIGI” Leather Flight Glove

Table 3-35. MAX Grip NT "DIGI" Leather Flight Glove

	Sage Green	Tan	Black
Small	8415-MX-06-08	8415-MX-04-08	8415-MX-05-08
Medium	8415-MX-06-09	8415-MX-04-09	8415-MX-05-09
Large	8415-MX-06-10	8415-MX-04-10	8415-MX-05-10
X-Large	8415-MX-06-11	8415-MX-04-11	8415-MX-05-11
XX-Large	8415-MX-06-12	8415-MX-04-12	8415-MX-05-12

3-553. MAINTENANCE.

3-554. The aircrewmember is responsible for pre/post-flight inspection and cleaning. Repairs or other maintenance actions required shall be performed by organizational level or above. All maintenance actions, inspections and repairs shall be recorded in accordance with COMNAVAIRFORINST 4790.2.

3-555. INSPECTION.

3-556. The gloves shall be subjected to a Place-In-Service Inspection, a Preflight/Postflight Inspection, and a 360-Day Special Inspection.

3-557. PLACE-IN-SERVICE INSPECTION. The gloves shall be inspected prior to Place-In-Service. To conduct the Place-In-Service Inspection proceed as follows:

1. Fit gloves to aircrewmember using fitting procedures outlined in paragraph 3-549.

2. Perform visual inspection in accordance with paragraph 3-559.

3. Annotate aircrewmember's identification BUNO on the inside of both gloves being careful not to cover identifying data (such as NIIN).

4. Document Place-In-Service Inspection in accordance with COMNAVAIRFORINST 4790.2.

3-558. PREFLIGHT/POSTFLIGHT INSPECTION. The aircrewmember is responsible for Preflight/Postflight Inspection. Preflight/Postflight Inspection consists of a visual inspection for condition of the gloves. Inspect in accordance with paragraph 3-559.

3-559. 360-DAY SPECIAL INSPECTION. The Special Inspection shall be performed by organizational level or above upon issue prior to placing in service, and every 360 days thereafter. To conduct the 360-Day Special Inspection proceed as follows:

1. Inspect fabric/leather for cuts, tears and abrasions.

2. Inspect stitching for holes and tears.

3. Inspect gloves to insure that they are Navy authorized gloves with proper identification, e.g. NIIN, Contract Number, Part Number, etc. Fire resistant flyer's gloves that have been open purchased from commercial establishments may not have the proper flame resistance and are not authorized.

4. Verify condition of gloves.

5. Record all maintenance actions and inspections in accordance with COMNAVAIRFORINST 4790.2.

3-560. CLEANING. Launder the gloves as follows:

CAUTION

Do not use bleaching compound.

1. Don gloves and wash with mild soap in water not over 120°F as if washing hands. When gloves are clean, rinse and remove from hands. Squeeze, but do not wring gloves to remove excess water.

2. After removing excess water, place gloves flat on towel and roll towel to cover gloves. Ensure gloves do not contact each other and are not exposed to hot air or sunlight.

3-561. REPAIRS. Repair of flyer's gloves is limited to restitching seams.

Section 3-29. HAU-6/P Lined Gloves

3-562. GENERAL.

3-563. The HAU-6/P Lined Gloves (MIL-G-38227) (Figure 3-42) are designated to be worn in cold temperature zones and, in a survival situation, are donned in place of the fire-resistant flyer's gloves.

3-564. CONFIGURATION.

3-565. The HAU-6/P lined gloves consist of knitted wool and nylon inserts (A-A-55119) which can be worn on either hand, and brown, intermediate weight leather glove shells. The gloves are available in four sizes. Size 1, NSN 8415-01-466-3174, Size 2, NSN 8415-01-466-3180, Size 3, NSN 8415-01-466-3176, Size 4, NSN 8415-01-466-3177.

3-566. APPLICATION.

3-567. The HAU-6/P lined gloves are designated for use by all aircrewmembers to supplement cold weather protection provided by the intermediate flyer's coverall or winter flyer's suit.

3-568. FITTING.

3-569. The lined gloves are fitted to the aircrewmember. The outer shell comes in 6 sizes and the liners come in 4 sizes. The leather glove shells may be worn without the inserts, but the inserts must not be worn without the glove shells. See Table 3-36 for corresponding glove sizes.

3-570. MODIFICATIONS.

3-571. There are no current directives affecting the HAU-6/P Lined Gloves.

3-572. MAINTENANCE.

3-573. The aircrewmember is responsible for pre/postflight inspection and cleaning. Repairs or other maintenance actions required shall be performed by organizational level or above. All maintenance actions, inspections and repairs shall be recorded in accordance with COMNAVAIRFORINST 4790.2.

3-574. INSPECTION.

3-575. The gloves shall be subjected to a Place-In-Service Inspection, a Preflight/Postflight Inspection, and a 360-Day Special Inspection.

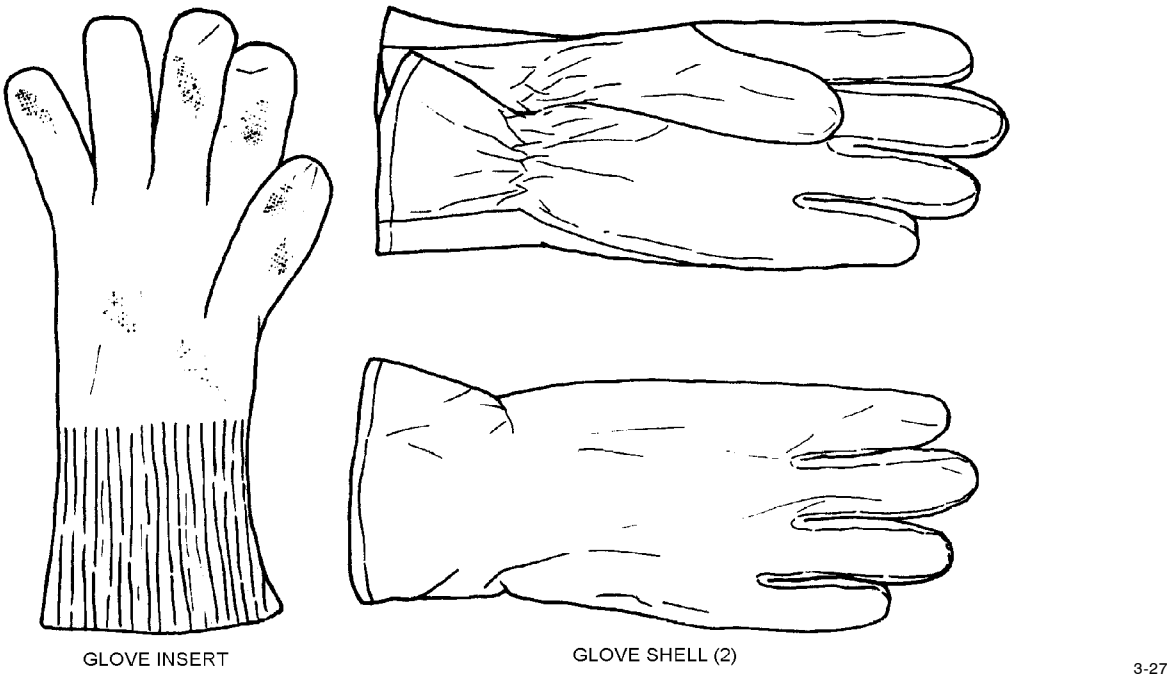

Figure 3-42. HAU-6/P Lined Gloves

Table 3-36. Lined Gloves

Flight Glove GS/FRP-2	HAU-6/P Outer Leather Shell	Insert
4	1	1
5	2	2
6	3	3
7	4	4
8	5	
9	6	
10		
11		
12		

3-576. PLACE-IN-SERVICE INSPECTION. The gloves shall be inspected prior to Place-In-Service. To conduct the Place-In-Service Inspection proceed as follows:

1. Fit gloves to aircrewmember using fitting procedures outlined in paragraph 3-568.

2. Perform visual inspection in accordance with paragraph 3-578.

3. Annotate aircrewmember's identification BUNO on the inside of both gloves, being careful not to cover identifying data (such as NIIN).

4. Document Place-In-Service Inspection in accordance with COMNAVAIRFORINST 4790.2.

3-577. PREFLIGHT/POSTFLIGHT INSPECTION. The aircrewmember is responsible for Preflight/Postflight Inspection. Preflight/Postflight Inspection consists of a visual inspection for condition of the gloves. Inspect in accordance with paragraph 3-578.

3-578. 360-DAY SPECIAL INSPECTION. The Special Inspection shall be performed by organizational level or above upon issue prior to placing in service, and every 360 days thereafter. To conduct the 360-Day Special Inspection proceed as follows:

1. Inspect fabric for cuts, tears and abrasions.

2. Inspect stitching for holes and tears.

3. Inspect gloves to insure that they are Navy authorized gloves with proper identification, e.g. NIIN, Contract Number, Part Number etc. Garments that have been open purchased from commercial establishments may not have the proper flame resistance and are not authorized.

4. Verify condition of gloves.

5. Record all maintenance actions and inspections in accordance with COMNAVAIRFORINST 4790.2.

3-579. CLEANING. The glove inserts may be dry-cleaned or washed in lukewarm or cold water and mild soap. Squeeze, but do not wring inserts to remove excess water. Dry inserts slowly on a dry towel away from extreme heat or flame.

3-580. REPAIRS. Repair of lined gloves is limited to restitching glove shell seams.

Section 3-30. HAU-14/P Cold/Wet Protective Flyer's Glove

3-581. GENERAL.

3-582. The Cold/Wet Protective Flyer's Glove, HAU-14/P, (Figure 3-43) is designated for use in cold to extreme cold temperature zones. The glove provides protection from cold temperatures, water and wind as well as flame and heat resistance in the event of an aircraft fire.

3-583. CONFIGURATION.

3-584. The Cold/Wet Protective Flyer's Glove is designed to provide maximum warmth while providing tactility and dexterity. The back of the fingers have a pleat which increases dexterity and mobility. The outer shell is constructed from durable black sheep-skin leather on the palm and fingertips. The back of the shell is a stretchable, sage-green, light-weight knit aramid fabric. The back of the hand is lined with a 100gm weight insulation laminated to a cotton lining. The palm has a heat transfer bladder filled with silicone oil adhered to a cotton lining. An oxygen activated heat pack is placed in a pocket located at the wrist that heats the oil and as the hand moves the oil moves, thereby distributing the heat to the remainder of the hand, extending up the fingers. The cotton lining prevents melting/dripping of the insulation onto the hand in the event of an aircraft fire. The elastic across the back of the hand gives a snugger fit. The gloves are available in sizes 5 to 11, see Table 3-37. The heat packs are available through local purchase. They are available from local sporting goods stores or general merchandise stores.

3-585. APPLICATION.

3-586. The gloves are designated for use by all aircrewmembers and are to be used for in-flight operations. (There is another cold weather glove designated the HAU-15/P. The HAU-15/P is intended for milder conditions, aircrew who need a glove with greater tactility, or for those who need a less insulative glove. The aircrewmember should decide which glove is best for them.) Work gloves should be used for all other dirty or heavy work functions.

3-587. FITTING.

3-588. The Cold/Wet Protective Flyer's Glove has an integrated sizing system designed to fit both male and female aircrew. The gloves should be fitted in accordance with the instructions and table below, using the aircrewmember's preferred hand (i.e. right handed - right hand.) Once a size has been determined through measuring, the aircrewmember should try on the glove to determine if the size is correct. The glove should be slightly snug, but not tight. If it is tight, the glove will not provide as much insulation.

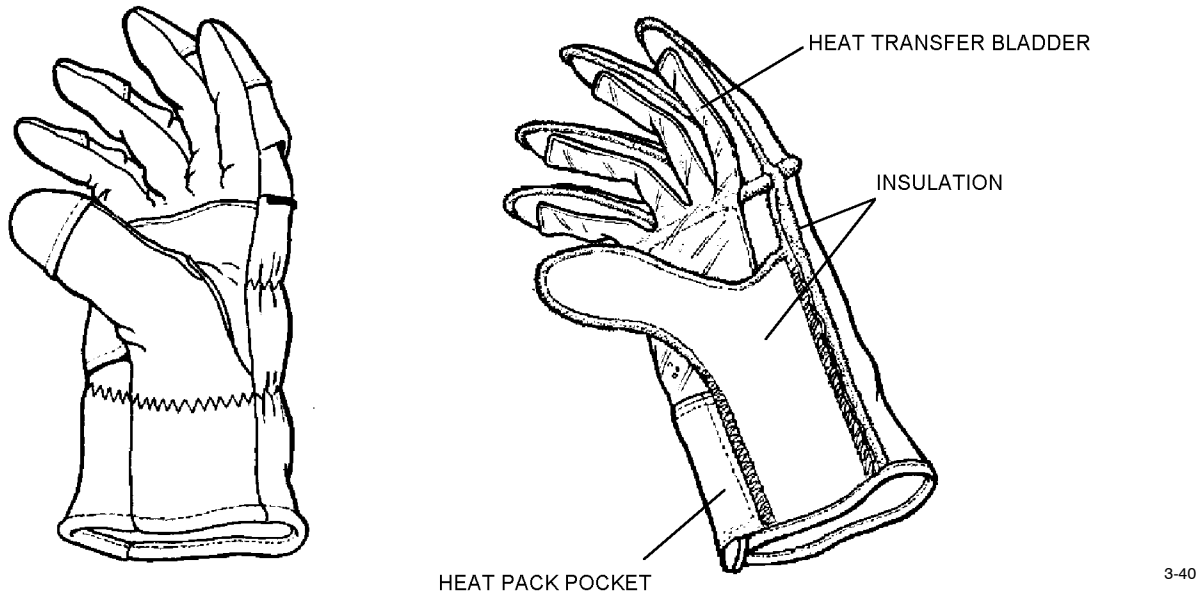

Figure 3-43. HAU-14/P Cold/Wet Protective Flyer's Glove

1. To measure the circumference of the hand, have the aircrewmember place their hand palm down on a flat surface with the fingers together and the thumb extended away from the rest of the hand. The fingers should be parallel to the forearm. Pass the measuring tape under the hand and over the knuckles at the base of the fingers. Record this measurement.

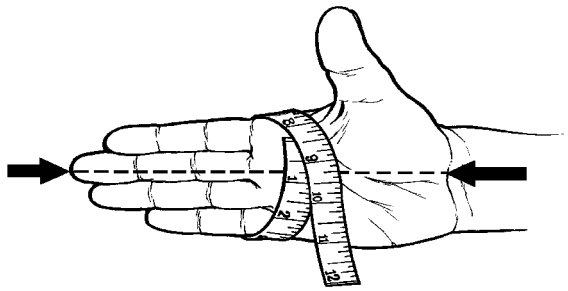

3p315s1

Step 1 - Para 3-588

2. To measure the length of the hand, have the aircrewmember place the back of their hand on a flat surface with the fingers together and the thumb extended away from the rest of the hand. The fingers should be parallel to the forearm. Two or three lines/creases will be visible across the wrist below the palm of the hand. Measure from middle of the first of these lines/creases to the tip of the longest finger. Record this measurement.

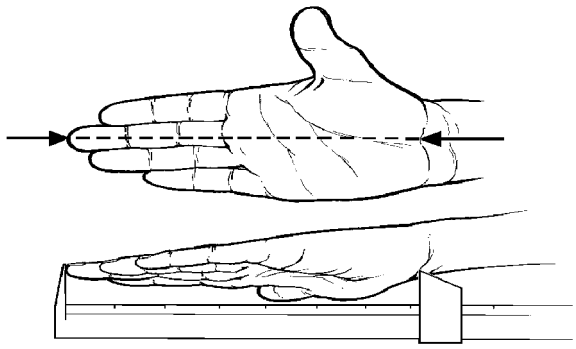

3p315s2

Step 2 - Para 3-588

3. Compare the recorded measurements to Table 3-37. The corresponding size listed should be the first glove tried on. Continue on a trial basis.

3-589. MODIFICATIONS.

3-590. There are no current directives affecting this equipment at this time.

3-591. MAINTENANCE.

3-592. The aircrewmember is responsible for pre/post-flight inspection and cleaning. Repairs or other maintenance actions required shall be performed by organizational level or above. All maintenance actions, inspections and repairs shall be recorded in accordance with COMNAVAIRFORINST 4790.2.

3-593. INSPECTION.

3-594. The HAU-14/P Cold/Wet Protective Flyer's Glove shall be subjected to a Place-In-Service Inspection, a Preflight/Postflight Inspection and a 360-Day Special Inspection.

3-595. PLACE-IN-SERVICE INSPECTION. The HAU-14/P Cold/Wet Protective Flyer's Glove shall be inspected prior to Place-In-Service. To conduct the Place-In-Service Inspection proceed as follows:

1. Fit assembly to aircrewmember using fitting procedures outlined in accordance with paragraph 3-587.

2. Perform visual inspection in accordance with paragraph 3-597.

3. Annotate aircrewmember's identification BUNO on the tag of the HAU-14/P Cold/Wet Protective Flyer's Glove being careful not to cover identifying data for the glove (such as NIIN).

4. Document Place-In-Service Inspection in accordance with COMNAVAIRFORINST 4790.2.

3-596. PREFLIGHT/POSTFLIGHT INSPECTION. The aircrewmember is responsible for Preflight/Postflight Inspection. Preflight/Postflight Inspection consists of a visual inspection for condition of the HAU-14/P Cold/Wet Protective Flyer's Glove. Inspect in accordance with paragraph 3-597.

3-597. 360-DAY SPECIAL INSPECTION. The Special Inspection shall be performed by organizational level or above upon issue prior to placing in service, and every 360 days thereafter. To conduct the 360-Day Special Inspection proceed as follows:

1. Inspect fabric and leather for cuts, tears and abrasions.

2. Inspect stitching for holes and tears.

Table 3-37. Sizing Guide (HAU-14/P)

Size	Hand Circumference (inches)		Hand Length (inches)		NIIN
	Minimum	Maximum	Minimum	Maximum	
5	6.4	8.0	6.4	6.7	01-467-9958
6	6.6	8.2	6.7	7.0	01-468-0089
7	6.8	8.6	7.0	7.25	01-468-0091
8	7.0	8.75	7.25	7.5	01-468-0092
9	7.2	9.0	7.5	7.8	01-468-0093
10	7.4	9.2	7.8	8.1	01-468-0094
11	7.6	9.4	8.1	8.4	01-468-0095

3. Inspect HAU-14/P Cold/Wet Protective Flyer's Glove to insure that it is a Navy authorized glove with proper identification, e.g. NIIN, Contract Number, Part Number etc. Gloves that have been open purchased from commercial establishments may not have the proper flame resistance and are not authorized.

4. Verify condition of the gloves.

5. Document in accordance with COMNAVAIRFORINST 4790.2.

3-598. CLEANING. Launder the gloves as follows:

CAUTION

Do not use bleaching compound.

1. Hand wash with mild soap in warm water, not over 120°F. Rinse thoroughly. Squeeze, but do not wring or twist gloves to remove excess water.

2. After removing excess water, place gloves flat on a towel and roll towel to cover gloves. Ensure gloves do not contact each other and are not exposed to hot air or sunlight. Air dry.

3-599. REPAIRS. Repair of flyer's glove is limited to restitching seams.

Section 3-31. HAU-15/P Intermediate Cold Weather Flyer's Glove

3-600. GENERAL.

3-601. The Intermediate Cold Weather Flyer's Glove, HAU-15/P, (Figure 3-44) is designated for use in moderate and cold temperature zones. The glove provides protection from cold temperatures as well as flame and heat resistance in the event of an aircraft fire.

3-41

Figure 3-44. HAU-15/P Cold Weather Flyer's Glove

3-602. CONFIGURATION.

3-603. The Cold Weather Flyer's Glove is designed to provide maximum tactility and dexterity while providing warmth. The fingertips have a unique design that eliminates a seam from the end of the tip that allows for better tactility. The back of the fingers have a pleat which increases dexterity and mobility. The outer shell is constructed from a durable black sheepskin leather on the palm and fingertips. The back of the shell is a stretchable, sage-green, light-weight knit aramid fabric. The glove is lined with two different weights of insulation. On the back of the hand is a 100gm weight insulation laminated to a cotton lining. The palm and fingertips have a 40gm weight insulation laminated to a cotton lining. The lighter weight insulation on the palm increases tactil-ity and dexterity. The cotton lining prevents melting/dripping of the insulation onto the hand in the event of an aircraft fire. An aramid knit cuff at the bottom of the glove and elastic at the wrist keeps drafts from entering the glove. The elastic across the back of the hand gives a snugger fit. The gloves are available in sizes 5 to 11, see Table 3-38.

3-604. APPLICATION.

3-605. The gloves are designated for use by all aircrewmembers and are to be used for in-flight operations. (There is another cold weather glove designated the HAU-14/P. The HAU-14/P is intended for colder conditions, wet conditions, or for those who need a warmer glove. The aircrewmember should decide which glove is best for them.) Work gloves should be used for all other dirty or heavy work functions.

Table 3-38. Sizing Guide (HAU-15/P)

Size	Hand Circumference (inches)		Hand Length (inches)		NIIN
	Minimum	Maximum	Minimum	Maximum	
5	6.4	8.0	6.4	6.7	01-446-9247
6	6.6	8.2	6.7	7.0	01-446-9248
7	6.8	8.6	7.0	7.25	01-446-9252
8	7.0	8.75	7.25	7.5	01-446-9253
9	7.2	9.0	7.5	7.8	01-446-9254
10	7.4	9.2	7.8	8.1	01-446-9256
11	7.6	9.4	8.1	8.4	01-446-9259

3-606. FITTING.

3-607. The Cold Weather Flyer's Glove has an integrated sizing system designed to fit both male and female aircrew. The gloves should be fitted in accordance with the instructions and table below, using the aircrewmembers preferred hand (i.e. right handed - right hand.) Once a size has been determined through measuring, the aircrewmembers should try on the glove to determine if the size is correct. The glove should be slightly snug, but not tight. If it is tight, the glove will not provide as much insulation.

1. To measure the circumference of the hand, have the aircrewmember place their hand palm down on a flat surface with the fingers together and the thumb extended away from the rest of the hand. The fingers should be parallel to the forearm. Pass the measuring tape under the hand and over the knuckles at the base of the fingers. Record this measurement.

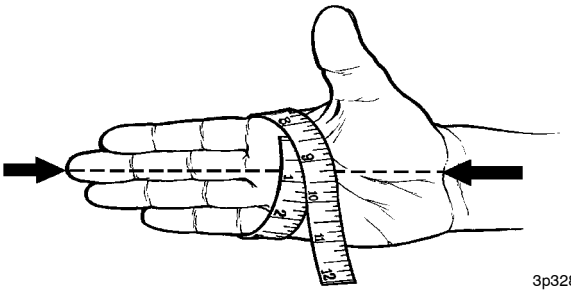

Step 1 - Para 3-607

2. To measure the length of the hand, have the aircrewmember place the back of their hand on a flat surface with the fingers together and the thumb extended away from the rest of the hand. The fingers should be parallel to the forearm. Two or three lines/creases will be visible across the wrist below the palm of the hand. Measure from middle of the first of these lines/creases to the tip of the longest finger. Record this measurement.

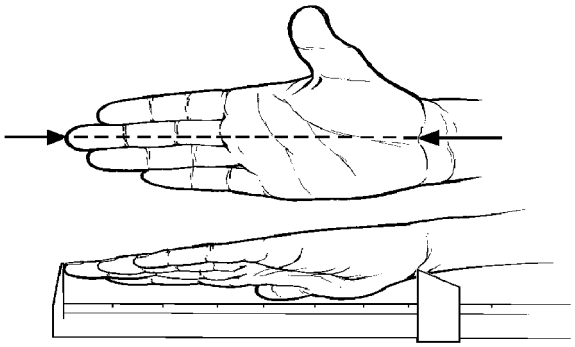

Step 2 - Para 3-607

3. Compare the recorded measurements to Table 3-38. The corresponding size listed should be the first glove tried on. Continue on a trial basis.

3-608. MODIFICATIONS.

3-609. There are no current directives affecting this equipment at this time.

3-610. MAINTENANCE.

3-611. The aircrewmember is responsible for pre/post-flight inspection and cleaning. Repairs or other maintenance actions required shall be performed by organizational level or above. All maintenance actions, inspections and repairs shall be recorded in accordance with COMNAVAIRFORINST 4790.2.

3-612. INSPECTION.

3-613. The HAU-15/P Intermeidate Cold Weather Flyer's Glove shall be subjected to a Place-In-Service Inspection, a Preflight/Postflight Inspection and a 360-Day Special Inspection.

3-614. PLACE-IN-SERVICE INSPECTION. The HAU-15/P Intermeidate Cold Weather Flyer's Glove shall be inspected prior to Place-In-Service. To conduct the Place-In-Service Inspection proceed as follows:

1. Fit assembly to aircrewmember using fitting procedures outlined in paragraph 3-606.

2. Perform visual inspection in accordance with paragraph 3-616.

3. Annotate aircrewmember's identification BUNO on the tag of the HAU-15/P Intermeidate Cold Weather Flyer's Glove being careful not to cover identifying data for the glove (such as NIIN).

4. Document Place-In-Service Inspection in accordance with COMNAVAIRFORINST 4790.2.

3-615. PREFLIGHT/POSTFLIGHT INSPECTION. The aircrewmember is responsible for Preflight/Postflight Inspection. Preflight/Postflight Inspection consists of a visual inspection for condition of the HAU-15/P Intermeidate Cold Weather Flyer's Glove. Inspect in accordance with paragraph 3-616.

3-616. 360-DAY SPECIAL INSPECTION. The Special Inspection shall be performed by organizational level or above upon issue prior to placing in service, and every 360 days thereafter. To conduct the 360-Day Special Inspection proceed as follows:

1. Inspect fabric and leather for cuts, tears and abrasions.

2. Inspect stitching for holes and tears.

3. Inspect glove to insure that it is a Navy authorized HAU-15/P Intermeidate Cold Weather Flyer's Glove with proper identification, e.g. NIIN, Contract Number, Part Number etc. Gloves that have been open purchased from commercial establishments may not have the proper flame resistance and are not authorized.

4. Verify condition of the gloves.

5. Document in accordance with COMNAVAIRFORINST 4790.2.

3-617. CLEANING. Launder the gloves as follows:

CAUTION

Do not use bleaching compound.

1. Hand wash with mild soap in warm water, not over 120°F. Rinse thoroughly. Squeeze, but do not wring or twist gloves to remove excess water.

2. After removing excess water, place gloves flat on a towel and roll towel to cover gloves. Ensure gloves do not contact each other and are not exposed to hot air or sunlight. Air dry.

3-618. REPAIRS. Repair of flyer's glove is limited to restitching seams.

Section 3-32. Heavy Duty Leather Gloves

3-619. GENERAL.

3-620. The Heavy Duty Leather Gloves shall be used by aircrewmembers during Vertical Replenishment Operations and Mine Counter-Measure Operations, as required, where the use of the GS/FRP-2 Fire Resistant Flyer's Gloves would be excessively worn.

3-621. CONFIGURATION.

3-622. The Heavy Duty Leather Gloves are all leather, five-finger glove with a pull tab type adjusting strap over the back of the hand.

3-623. APPLICATION.

3-624. The gloves are designed for use by aircrewmembers performing duties other than flight operations and is intended to be used as a work glove.

3-625. FITTING.

3-626. The Heavy Duty Leather Gloves come in four sizes, small, medium, large, and extra-large (Table 3-39).

3-627. MODIFICATIONS.

3-628. There are no current directives affecting this equipment at this time.

3-629. MAINTENANCE.

3-630. The aircrewmember is responsible for pre/postflight inspection and cleaning. Repairs or other maintenance actions required shall be performed by organizational level or above. All maintenance actions, inspections and repairs shall be recorded in accordance with COMNAVAIRFORINST 4790.2.

Table 3-39. Heavy Duty Leather Glove Sizes

Size	NIIN
Small	01-394-0209
Medium	01-394-0210
Large	01-394-0215
Extra-Large	01-397-3937

3-631. INSPECTION.

3-632. The Heavy Duty Leather Gloves shall be subjected to a Place-In-Service Inspection, a Preflight/Postflight Inspection and a 360-Day Special Inspection.

3-633. PLACE-IN-SERVICE INSPECTION. The gloves shall be inspected prior to Place-In-Service. To conduct the Place-In-Service Inspection proceed as follows:

1. Fit assembly to aircrewmember using fitting procedures outlined in paragraph 3-625.

2. Perform visual inspection in accordance with paragraph 3-635.

3. Annotate aircrewmember's identification BUNO on the tag of the Heavy Duty Leather Gloves being careful not to cover identifying data for the gloves (such as NIIN).

4. Document Place-In-Service Inspection in accordance with COMNAVAIRFORINST 4790.2.

3-634. PREFLIGHT/POSTFLIGHT INSPECTION. The aircrewmember is responsible for Preflight/Postflight Inspection. Preflight/Postflight Inspection consists of a visual inspection for condition of the Heavy Duty Leather Gloves. Inspect in accordance with paragraph 3-635.

3-635. 360-DAY SPECIAL INSPECTION. The Special Inspection shall be performed by organizational level or above upon issue prior to placing in service, and every 360 days thereafter. To conduct the 360-Day Special Inspection proceed as follows:

1. Inspect leather for cuts, tears, and abrasions.

2. Inspect stitching for holes, tears, and loose stitches.

3. Inspect gloves to insure that it is a Navy authorized gloves with proper identification, e.g. NIIN, Contract Number, Part Number etc. Gloves that have been open purchased from commercial establishments may not have the proper flame resistance and are not authorized.

4. Verify condition of the gloves.

5. Document in accordance with COMNAVAIRFORINST 4790.2.

3-636. CLEANING.

1. Wash gloves in mild soap and water.

2. Dry gloves slowly, and away from heat and flame.

Section 3-33. Pre-Flight Gloves

3-637. GENERAL.

3-638. The cotton work gloves (MIL-G-3866) (see Figure 3-45) are to be donned in place of the GS/FRP-2 fire resistant flyer's glove while pre-flighting aircraft.

3-639. CONFIGURATION.

3-640. The MIL-G-3866 cotton work gloves consist of a cotton knitted material and are available in sizes medium and small.

3-641. APPLICATION.

3-642. The MIL-G-3866 cotton work gloves are de-sig-nated for use by all aircrewmembers to be used during pre-flight aircraft inspection.

3-643. FITTING.

3-644. Thre pre-flight gloves come in two sizes and are fitted according to whichever size fits best, medium or small.

3-645. MODIFICATIONS.

3-646. There are no current directives affecting the pre-flight gloves.

3-647. MAINTENANCE.

3-648. The aircrewmember is responsible for pre/post-flight inspection and cleaning. Repairs or other maintenance actions required shall be performed by organizational level or above. All maintenance actions,inspections and repairs shall be recorded in accordance with COMNAVAIRFORINST 4790.2.

3-649. INSPECTION.

3-650. The Preflight Gloves shall be subjected to a Place-In-Service Inspection, a Preflight/Postflight Inspection, and a 360-Day Special Inspection.

3-651. PLACE-IN-SERVICE INSPECTION. The Preflight Gloves shall be inspected prior to Place-In-Service. To conduct the Place-In-Service Inspection proceed as follows:

1. Fit assembly to aircrewmember using fitting procedures outlined in paragraph 3-643.

2. Perform visual inspection in accordance with paragraph 3-653.

3. Annotate aircrewmember's identification BUNO on the tag of the gloves being careful not to cover identifying data for the gloves (such as NIIN).

4. Document Place-In-Service Inspection in accordance with COMNAVAIRFORINST 4790.2.

3-652. PREFLIGHT/POSTFLIGHT INSPECTION. The aircrewmember is responsible for Preflight/Postflight Inspection. Preflight/Postflight Inspection consists of a visual inspection for condition of the gloves. Inspect in accordance with paragraph 3-653.

3-653. 360-DAY SPECIAL INSPECTION. The Special Inspection shall be performed by organizational level or above upon issue prior to placing in service, and every 360 days thereafter. To conduct the 360-Day Special Inspection proceed as follows:

1. Inspect fabric for cuts, tears and abrasions.

2. Inspect stitching for holes and tears.

3. Inspect gloves to insure that it is a Navy authorized gloves with proper identification, e.g. NIIN, Contract Number, Part Number etc. Pre-flight gloves that have been open purchased from commercial establishments may not have the proper flame resistance and are not authorized.

4. Verify condition of gloves.

5. Record all maintenance actions and inspections in accordance with COMNAVAIRFORINST 4790.2.

3-654. CLEANING.

3-655. To clean and dry cotton pre-flight gloves, launder in home or commercial washers and dryers, using normal cycles.

3-656. REPAIRS AND FABRICATIONS.

3-657. Repairs and fabrications shall be performed by the lowest maintenance level possible. Repairs shall be limited to stitching small damage/holes/tears in fabric and seams.

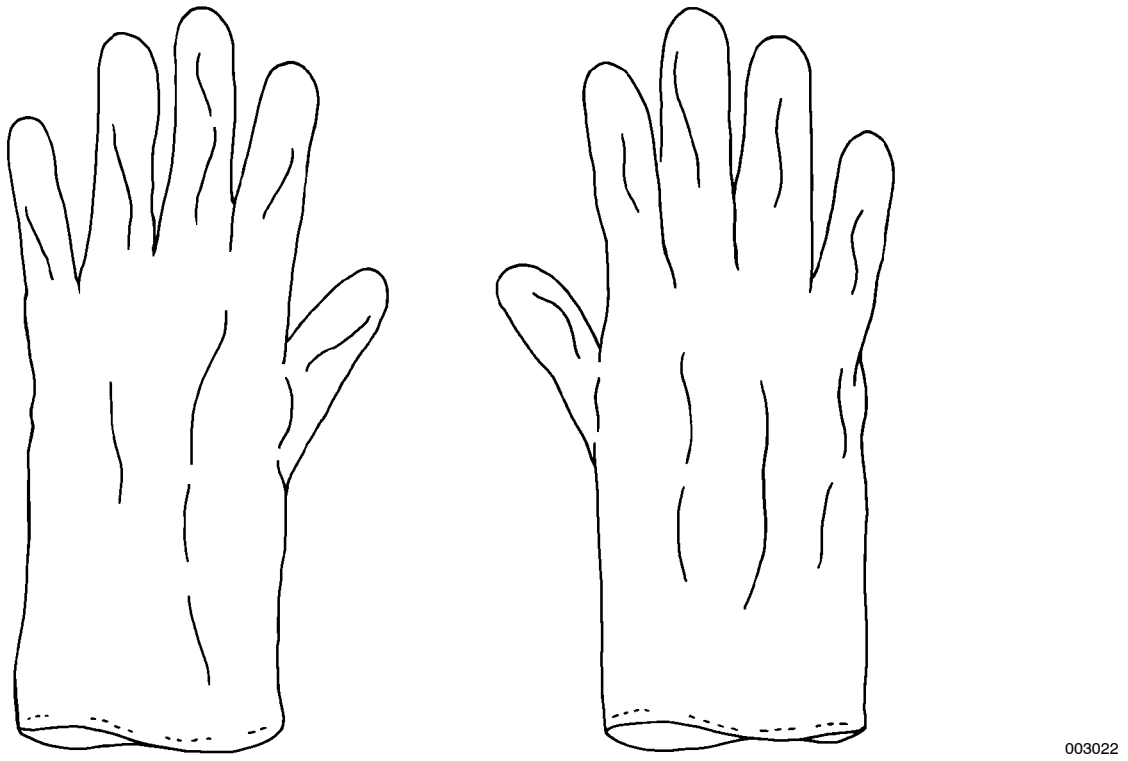

Figure 3-45. Gloves, Cotton Work (Pre-Flight)

Section 3-34. Silk Glove Liners

3-658. GENERAL.

3-659. The silk glove liners (Figure 3-46) are designated for use in cold weather environments in which the standard flyer's glove (GS/FRP-2) is not warm enough and in which the HAU-14/P and HAU-15/P gloves are too warm for the aircrewmember. The silk glove liner provides additional protection from the cold when worn underneath the GS/FRP-2 Summer Flyer's Glove.

3-660. CONFIGURATION.

CAUTION

It is very important that the fiber content of the glove liner is silk. Polyester and/or nylon glove liners are not approved for use.

3-661. The silk glove liner is available from commercial sources. The glove liner provides additional warmth with little impact on tactility and dexterity. The glove liner is worn underneath the GS/FRP-2 Summer Flyer's Glove directly against the skin.

NOTE

The silk glove liner is available from local commercial sources such as sporting goods stores and ski shops. Check the sizes available with the local source.

3-662. APPLICATION.

3-663. The silk glove liners are designed for use by all aircrewmembers and can be used whenever the GS/FRP-2 is being worn for in-flight operations. If the fit of the GS/FRP-2 is very tight, the aircrewmember may require increasing the size of the flyer's glove in order to fit overtop the liner. The sizing of the silk glove liner varies by manufacturer.

3-664. MODIFICATIONS.

3-665. There are no current directives affecting this equipment at this time.

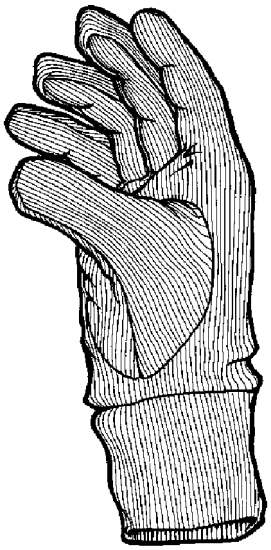

3-39

Figure 3-46. Silk Glove Liner

3-666. MAINTENANCE.

3-667. The aircrewmember is responsible for pre/postflight inspection and cleaning. Repairs or other maintenance actions required shall be performed by organizational level or above. All maintenance actions, inspections and repairs shall be recorded in accordance with COMNAVAIRFORINST 4790.2.

3-668. INSPECTION.

3-669. The silk glove liners shall be subjected to a Place-In-Service Inspection, a Preflight/Postflight Inspection and a 360-Day Special Inspection.

3-670. PLACE-IN-SERVICE INSPECTION. The silk glove liners shall be inspected prior to Place-In-Service. To conduct the Place-In-Service Inspection proceed as follows:

1. Perform visual inspection in accordance with paragraph 3-672.

2. Annotate aircrewmember's identification BUNO on the tag of the silk glove liners being careful not to cover identifying data for the liners (such as NIIN).

3. Document Place-In-Service Inspection in accordance with COMNAVAIRFORINST 4790.2.

3-671. PREFLIGHT/POSTFLIGHT INSPECTION. The aircrewmember is responsible for Preflight/Postflight Inspection. Preflight/Postflight Inspection consists of a visual inspection for condition of the silk gloves liners. Inspect in accordance with paragraph 3-672.

3-672. 360-DAY SPECIAL INSPECTION. The Special Inspection shall be performed by organizational level or above upon issue prior to placing in service, and every 360 days thereafter. To conduct the 360-Day Special Inspection proceed as follows:

1. Inspect fabric for any cuts, tears, abrasions, runs.

2. Inspect stitching for holes and tears.

3. Inspect silk glove liners to insure that it is a Navy authorized liner with proper identification, e.g. NIIN, Contract Number, Part Number etc. Silk glove liners that have been open purchased from commercial establishments may not have the proper flame resistance and are not authorized.

4. Verify condition of the glove liners.

5. Document in accordance with COMNAVAIRFORINST 4790.2.

3-673. CLEANING. Launder the glove liners as follows:

1. Hand wash with mild soap in cold water. Rinse thoroughly. Squeeze but do not wring or twist liners to remove excess water.

2. After removing excess water, air dry.

3-674. REPAIRS. Repair of the glove liners is limited to restitching seams.

Section 3-35. HAU-12/P Anti-Exposure Mittens

3-675. GENERAL.

3-676. The Anti-Exposure Mittens, HAU-12/P MIL-M-81844, are designed to provide protection for an aircrewmember's hands in low-temperature conditions. See Figure 3-47.

3-677. CONFIGURATION.

3-678. The mittens are constructed from two layers of polyurethane-coated nylon cloth. These layers are heat sealed around the edges and bar bonded in the middle for flexibility and contour shaping. The mittens are inflatable and equipped with an oral inflation valve and tie cord for securing to the pocket in which the mittens are stowed.

3-679. APPLICATION.

3-680. The mittens are designed for use with constant wear anti-exposure coveralls. They shall be stowed in the pockets of anti-exposure assemblies. Mittens shall be personal issue during cold weather operations.

CAUTION

Pull very gently to open red valve. Excessive pull can cause valve stem to separate from the valve. If separation occurs, push stem gently back into valve.

3-681. MODIFICATIONS.

3-682. There are no current directives affecting the Anti-Exposure Mittens.

3-683. MAINTENANCE.

3-684. The aircrewmember is responsible for pre/post-flight inspection and cleaning. Repairs or other maintenance actions required shall be performed by organizational level or above. All maintenance actions, inspections and repairs shall be recorded in accordance with COMNAVAIRFORINST 4790.2.

3-685. INSPECTION.

3-686. The HAU-12/P Anti-Exposure Mittens shall be subjected to a Place-In-Service Inspection, a Preflight/Postflight Inspection and a 360-Day Special Inspection.

3-687. PLACE-IN-SERVICE INSPECTION. The HAU-12/P Anti-Exposure Mittens shall be inspected prior to Place-In-Service. To conduct the Place-In-Service Inspection proceed as follows:

1. Perform visual inspection in accordance with paragraph 3-689.

2. Annotate aircrewmember's identification BUNO on the tag of the HAU-12/P Anti-Exposure Mittens being careful not to cover identifying data for the mittens (such as NIIN).

3. Document Place-In-Service Inspection in accordance with COMNAVAIRFORINST 4790.2.

003041a

Figure 3-47. HAU-12/P Anti-Exposure Mittens

3-688. PREFLIGHT/POSTFLIGHT INSPECTION. The aircrewmember is responsible for Preflight/Postflight Inspection. Preflight/Postflight Inspection consists of a visual inspection for condition of the HAU-12/P Anti-Exposure Mittens. Inspect in accordance with paragraph 3-689.

3-689. 360-DAY SPECIAL INSPECTION. The Special Inspection shall be performed by organizational level or above upon issue prior to placing in service, and every 360 days thereafter. To conduct the 360-Day Special Inspection proceed as follows:

1. If required, clean the mittens in accordance with paragraph 3-690.

2. Inspect mittens by examining the following:

a. Cloth and oral inflation tube surfaces for cuts, tears, abrasions, and deterioration.

b. Seams for adhesion.

c. Oral inflation valve for proper operation.

3. If discrepancies are noted, discard mittens.

4. Perform leak test in accordance with paragraph 3-691.

5. Inspect mittens to insure that it is a Navy authorized mittens with proper identification, e.g. NIIN, Contract Number, Part Number etc. Mittens that have been open purchased from commercial establishments may not have the proper flame resistance and are not authorized.

6. Record inspection in accordance with COMNAVAIRFORINST 4790.2.

3-690. CLEANING. To clean the mittens, proceed as follows:

1. Close and lock the oral inflation valves.

2. Sponge the mittens with a solution of general purpose detergent and lukewarm water.

3. Rinse with cool fresh water and allow to air dry.

3-691. LEAK TEST.

3-692. Test Fixture. Low pressure air source and deep sink or equivalent. Fill deep sink or equivalent with enough potable water to completely immerse mittens.

3-693. Test Procedure. To test mittens for leakage, proceed as follows:

1. Unlock oral inflation valve. Insert valve into hose of low pressure source of air.

2. Inflate mittens to designed shape.

3. Close oral inflation valve on mittens.

4. Remove nylon cord retaining lanyards from mittens. Retain for reinstallation when mittens are dry.

5. Immerse mittens in water and fill inside of mittens with water. Move mittens from side to side and up and down to ensure trapped residual air is expelled. Check for leaks.

6. After leak check remove mittens from water and keep inflated.

7. Remove water from inside mittens and set inflated mittens on clean, dry surface and allow to dry.

8. Measure retaining lanyards removed in step 4. Lanyards shall be Type I or IA nylon cord measuring 50 inches, plus or minus 3 inches.

9. Install retaining lanyard in grommet of each mitten and secure with bowline knot.

NOTE

Refer to NAVAIR 13-1-6.1-1 for equipment required to deflate mittens.

10. Upon completion of test, ensure mittens are thoroughly evacuated to prevent expansion of trapped air at altitude and ensure valve is left open.

3-694. REPAIRS. No repairs are authorized.

Section 3-36. Anti-Flash Hood

3-695. GENERAL.

3-696. The Anti-Flash Hood, MIL-H-24936 (NIIN 01-493-4694), (Figure 3-48) is for use over or under a helmet (or it may be worn by itself if a helmet is not required) in cold weather to provide protection to the head and face from the cold as well as protection in the event of an aircraft fire.

3-697. CONFIGURATION.

3-698. The anti-flash hood is constructed of a knit cloth that is a blend of 80% permanent flame-resistant rayon and 20% polybenzimidazole (PBI). There are two layers of the knit cloth around the head and one layer of knit on the bottom cowl portion of the hood. The knit allows the hood to conform to the head of the user for a close fit. The face opening can be pulled down under the chin to expose the entire face or it can be pulled up over the nose leaving and opening for the eyes to protect more of the face from the wind and cold. The bottom of the hood should be tucked into a jacket. This hood will fit under the helmet and should be worn in place of a skull cap to avoid hot spots. The aramid material provides inherent flame protection and the fabric will not melt or drip in the event of an aircraft fire. The hood is one-size-fits-all and the NIIN is 01-268-3473.

003032

Figure 3-48. Anti-Flash Hood

3-699. APPLICATION.

3-700. The anti-flash hood is designated for all aircrewmembers and can be used for pre-flight, post-flight and in-flight operations. Aircrewmembers wearing the hood with helmets having form fit liners may develop hot spots. If this occurs, it may be necessary to procure a new form fit liner for use with the hood.

3-701. MODIFICATIONS.

3-702. There are no current directives affecting this equipment at this time.

3-703. MAINTENANCE.

3-704. The aircrewmember is responsible for pre/post-flight inspection and cleaning. Repairs or other maintenance actions required shall be performed by organizational level or above. All maintenance actions, inspections and repairs shall be recorded in accordance with COMNAVAIRFORINST 4790.2.

3-705. INSPECTION.

3-706. The anti-flash hood shall be subjected to a Place-In-Service Inspection, a Preflight/Postflight Inspection, and a 360-Day Special Inspection.

3-707. PLACE-IN-SERVICE INSPECTION. The anti-flash ood shall be inspected prior to Place-In-Service. To conduct the Place-In-Service Inspection proceed as follows:

1. Perform visual inspection in accordance with paragraph 3-709.

2. Annotate aircrewmember's identification BUNO on the tag of the hood being careful not to cover identifying data for the hood (such as NIIN).

3. Document Place-In-Service Inspection in accordance with COMNAVAIRFORINST 4790.2.

3-708. PREFLIGHT/POSTFLIGHT INSPECTION. The aircrewmember is responsible for Preflight/Postflight Inspection. Preflight/Postflight Inspection consists of a visual inspection for condition of the anti-flash hood. Inspect in accordance with paragraph 3-709.

3-709. 360-DAY SPECIAL INSPECTION. The Special Inspection shall be performed by organizational level or above upon issue prior to placing in service, and every 360 days thereafter. To conduct the 360-Day Special Inspection proceed as follows:

1. Inspect fabric for cuts, tears and abrasions.

2. Inspect stitching for holes, tears, loose or broken stitching.

3. Inspect hood to insure that it is a Navy authorized hood with proper identification, e.g. NIIN, Contract Number, Part Number etc. Anti-flash hoods that have been open purchased from commercial establishments may not have the proper flame resistance and are not authorized.

4. Verify condition of hood.

5. Document in accordance with COMNAVAIRFORINST 4790.2.

3-710. CLEANING. Launder the hood as follows:

1. Machine wash warm with mild soap.

2. Tumble dry on medium heat setting.

3-711. REPAIRS. Repair of the hood shall include but is not limited to the following:

1. Hand or machine stitching of cuts or tears.

2. Repair of holes 1 inch or less in length or diameter are repairable; if hole is larger than 1 inch, discard hood. Repair hood with aramid cloth MIL-C-83429 (NIIN 01-147-2064). Stitching shall be in accordance with ASTM-D-6193, Type 301 lockstitch, 7 to 10 stitches per inch with a minimum backstitch of 1 inch.

3. Restitching of loose or broken stitches.

4. Verify condition of hood.

5. Document in accordance with COMNAVAIRFORINST 4790.2.

Section 3-37. HGU-32/P Anti-Exposure Hood

3-712. GENERAL.

3-713. The Anti-Exposure Hood, HGU-32/P (MIL-H-81843) is designed to provide protection for the aircrewmember's head in low-temperature conditions. See Figure 3-49.

3-714. CONFIGURATION.

3-715. The hood is constructed from two layers of polyurethane-coated nylon cloth. These layers are heat sealed around the edges and bar bonded in the middle for flexibility and contour shaping. The hood is inflatable and is equipped with an oral inflation valve, hook/pile tape closure, and a tie cord for securing to the pocket in which the hood is stowed.

3-716. APPLICATION.

3-717. The hood is designed for use with constant wear anti-exposure coveralls. The hood shall be stowed in the pockets of the anti-exposure assemblies. The hood shall be personal issue during cold weather operations.

3-718. MODIFICATIONS.

3-719. There are no current directives affecting the Anti-Exposure Hood.

3-720. MAINTENANCE.

3-721. The aircrewmember is responsible for pre/postflight inspection and cleaning. Repairs or other maintenance actions required shall be performed by organizational level or above. All maintenance actions, inspections and repairs shall be recorded in accordance with COMNAVAIRFORINST 4790.2.

3-722. INSPECTION.

3-723. The hood shall be subjected to a Place-In-Service Inspection, a Preflight/Postflight Inspection, and a 360-Day Special Inspection.

3-724. PLACE-IN-SERVICE INSPECTION. The hood shall be inspected prior to Place-In-Service. To conduct the Place-In-Service Inspection proceed as follows:

1. Perform visual inspection in accordance with paragraph 3-726.

003032a

Figure 3-49. HGU-32/P Anti-Exposure Hood

2. Annotate aircrewmember's identification BUNO on the tag of the hood being careful not to cover identifying data for the hood (such as NIIN).

3. Document Place-In-Service Inspection in accordance with COMNAVAIRFORINST 4790.2.

3-725. PREFLIGHT/POSTFLIGHT INSPECTION. The aircrewmember is responsible for Preflight/Postflight Inspection. Preflight/Postflight Inspection consists of a visual inspection for condition of the hood. Inspect in accordance with paragraph 3-726.

3-726. 360-DAY SPECIAL INSPECTION. The Special Inspection shall be performed by organizational level or above upon issue prior to placing in service, and every 360 days thereafter. To conduct the 360-Day Special Inspection proceed as follows:

1. If required, clean the hood in accordance with paragraph 3-727.

2. Inspect hood assembly by examining the following:

a. Cloth and oral inflation tube surfaces for cuts, tears, abrasions, and deterioration.

b. Seams for adhesion.

c. Oral inflation valve for proper operation.

3. If discrepancies are noted, discard hood.

4. Perform leak test in accordance with paragraph 3-728.

5. Inspect hood to insure that it is a Navy authorized hood with proper identification, e.g. NIIN, Contract Number, Part Number etc. Hoods that have been open purchased from commercial establishments may not have the proper flame resistance and are not authorized.

6. Document all maintenance actions in accordance with COMNAVAIRFORINST 4790.2.

3-727. CLEANING. To clean the hood, proceed as follows:

1. Close and lock oral inflation valve.

2. Sponge entire hood, inside and out with a solution of general purpose detergent and lukewarm water.

3. Rinse with cool fresh water and allow to air dry.

3-728. LEAK TEST.

3-729. Test Fixture. Low pressure air source and deep sink or equivalent. Fill sink with enough potable water to completely submerge the hood.

3-730. Test Procedure. To test hood for leakage, proceed as follows:

1. Unlock oral inflation valve. Insert valve into hose of low pressure source of air.

2. Inflate hood to design shape.

3. Close oral inflation valve on hood.

4. Remove Type I or IA nylon cord retaining lanyard from hood. Retain lanyard for reinstallation after test when hood is dry.

5. Immerse in water and move from side to side and up and down to ensure trapped residual air is expelled. Check hood for leaks.

6. If no leaks are found remove hood from water and keep inflated.

7. Place hood on clean dry surface and allow to dry.

8. Check retaining lanyard removed from hood. Ensure lanyard is Type I or IA nylon cord measuring 50 inches plus or minus 3 inches.

9. Reinstall lanyard through grommet of hood and secure using bowline knot.

NOTE

Refer to NAVAIR 13-1-6.1-1 for equipment required to deflate hood.

10. Upon completion of test, ensure air is thoroughly evacuated from hood to prevent expansion of trapped air at altitude. Ensure valve is left in open position.

3-731. REPAIRS. No repairs are authorized.

THIS PAGE INTENTIONALLY LEFT BLANK.

CHAPTER 4

ANTI-g GARMENTS

Section 4-1. Description

4-1. GENERAL.

4-2. The Anti-g Garments discussed in this chapter are designed to provide protection against the effects of high g-forces experienced by aircrew personnel assigned to high performance aircraft.

4-3. CONFIGURATION.

4-4. Anti-g garments consist of a bladder system encased in fire-resistant cloth outer shell. As g-forces increase, the bladders inflate automatically to pressures predetermined by an automatic valve system installed in the aircraft. The bladders, when inflated, apply pressure on the body to restrict the flow of blood downward to the aircrewmember's waist and feet to lessen the effects of blackout. Individual garments to be discussed in the following sections are the CSU-15/P, CSU-13B/P, and CSU-20/P which fit from the waist down and are worn over the standard flight suit. The CSU-21/P Counter Pressure Vest, also discussed in this chapter, is worn on the upper torso over the standard flight suit.

4-5. APPLICATION.

4-6. Anti-g garments are used by aircrewmen assigned to high performance aircraft.

Section 4-2. CSU-15/P, CSU-13B/P and CSU-15A/P Anti-g Garments

4-7. GENERAL.

4-8. The CSU-15/P anti-g garment (MIL-A-81905) (Figure 4-1 and Figure 4-3) and the CSU-13B/P anti-g garment (MIL-A-83406B) (Figure 4-2 and Figure 4-4) provide protection against the effect of g-forces experienced in high performance aircraft. The CSU-15A/P anti-g garment is identical to the current CSU-13B/P in form, fit, and function, and will be used as an alternative to the CSU-13B/P anti-g garment for Navy/Marine Corps only. All maintenance actions for the CSU-15A/P will be accomplished using the procedures for the CSU-13B/P.

NOTE

CSU-13B/P garments will replace the CSU-15/P garments on an attrition basis.

4-9. CONFIGURATION.

4-10. The anti-g garments (Figure 4-3 and Figure 4-4) consist of a fire-resistant aramid cloth outershell which houses a bladder. They are cut away at the buttocks, groin, and knees. The outershell has waist and leg entrance slide fasteners, adjustment lacing areas with lacing covers, and leg pockets with slide fastener closures. The CSU-13B/P also has a knife pocket on the front left thigh, and thigh take-ups with slide fasteners. The bladder system is constructed of polyurethane coated nylon cloth and covers the abdomen, thighs, and calves. The bladder system is fitted with a hose for connecting directly to the aircraft anti-g system. Refer to Table 4-1 for sizing.

4-11. APPLICATION.

4-12. CSU-15/P and CSU-13B/P anti-g garments are issued to individual aircrewmembers and are used in conjunction with standard Navy personal equipment. The CSU-15A/P anti-g garment is identical to the current CSU-13B/P in form, fit, and function, and will be used as an alternative to the CSU-13B/P anti-g garment for Navy/Marine Corps only. All maintenance actions for the CSU-15A/P will be accomplished using the procedures for the CSU-13B/P.

Table 4-1. Sizing CSU-13B/P Anti-g Garment

Garment Size	Height (In.)	Weight (Lbs)	NIIN
Small regular	63.0 - 67.9	131 - 160	00-545-8197
Small long	68.0 - 72.9	131 - 160	00-545-8204
Medium regular	64.5 - 69.4	161 - 190	00-545-8211
Medium long	69.5 - 74.4	161 - 190	00-550-7394
Large regular	67.0 - 71.24	191 - 220	00-545-8221
Large long	71.25 - 75.4	191 - 220	00-545-8227
Large extra long	75.5 - 79.0	191 - 230	00-545-8248

Note: For borderline cases (e.g. height 5′8″, (68″) weight 167 lbs.) it may be necessary to drop down one size from medium regular to small regular.

WARNING

Items that are carried or stored in the g-suit pockets must not be heavy, bulky, or sharp as injury could occur on ejection.

4-13. FITTING.

CAUTION

With bladder deflated, lace adjustments shall be tightened to provide a snug (not tight) comfortable fit, especially at the waist. The thigh take-up slide fasteners shall be closed during fitting.

4-14. OPTIONAL LEG RESTRAINT PASS-THROUGH OPENINGS IN THE LEG POCKETS OF THE CSU-13B/P ANTI-G GARMENT FOR AV-8B SERIES AIRCRAFT.

Materials Required

Quantity	Description	Reference Number
As Required	Thread, Nylon, High Temperature, Sage Green or Olive Drab	MIL-T-83193 NIIN 00-130-6245 NIIN 00-405-2252
	-or-	

Materials Required (Cont)

Quantity	Description	Reference Number
As Required	Thread, Nylon Type II, Size E, Sage Green	V-T-295 NIIN 00-204-3884
	-or-	
As Required	Thread, Size E	MIL-T-43636 NIIN 00-512-1103 NIIN 00-496-9901
1	Chalk, Marking	SS-C-266 NIIN 00-164-8893 or Equivalent
1	Razor, Surgical	MIL-R-36540 NIIN 00-924-2089 NIIN 01-363-1212 or Equivalent

NOTE

All stitching shall be ASTM-D-6193, Type 301 lockstitch 7 to 10 stitches per inch, with a 1-inch overstitch or backstitch minimum.

1. Unfold garment and unzip the waist and leg slide fasteners.

2. Lay out garment on a workbench with the outside of the garment facing up (Anti-g Hose to the technician's right).

3. Locate back of the pocket seams (pleats at the top just below the knee opening areas).

4. Measure down 2 1/2 ±1/8 inches from the binding tape edge of the knee openings at the top of the pockets and make a mark.

5. Measure down 2 ±1/2 inches from the mark made in step 4 and make a mark.

6. Carefully remove single row of stitches holding the back of the pocket to the garment between the two marks.

7. Remove thread fragments from the cut out area.

8. Restitch the cut ends of the stitches above and below the marks by using a 1/4 x 1 inch cross box-stitch over the double row of stitched fabric on the garment, or 3 rows of stitches 1 inch long at the seam ends (sew 1 inch, backstitch 1 inch, backstitch 1 inch). There shall be enough open space behind the pocket to install a leg restraint through openings.

9. Perform a Place-In-Service inspection in accordance with paragraph 4-26.

10. Document in accordance with COMNAVAIR-FORINST 4790.2.

4-15. ANTI-g GARMENT. The anti-g garment is fitted and adjusted to the aircrewmember on a best fit basis. Use Table 4-1 as a guide for selection. The cords shall be laced in the same direction as the applicable lacing cover slide fastener closure. Whenever possible, the anti-g garment should be fitted over the summer flyer's coverall, such that the lace adjustments are almost completely tightened. This will assure that the size coverall selected can be refitted to accommodate larger anti-exposure assemblies.

NOTE

During fitting and flight, the thigh take-up slide fasteners shall be closed. The thigh take-up slide fasteners may be left open for comfort during pre/post flight.

1. To fit proceed as follows:

a. Pull firmly on the cut ends of the lacing cords until a proper fit is achieved.

b. Tie ends in a double half-hitch knot. See Figure 4-3 and Figure 4-4.

NOTE

Do not cut off excess laces.

c. Fake excess lacing cord, secure with a lightweight rubber band and stow behind tightened laces. With a proper fit, cutout areas of anti-g garment should expose the knees, groin and buttocks without binding or hindering movement. The garment should fit snugly, but not tight, with the bladder deflated. The inflated bladder should compress the waist, thighs and calves firmly and evenly. If a snug fit cannot be achieved, refer to paragraph 4-16 for custom fitting.

NOTE

It is recommended that after donning the suit, the wrinkles be manually worked out of the bladder's seams to reduce discomfort.

CAUTION

When doffing garment do not use quick release feature of leg slide fastener as this may limit service life of the garment (CSU-15/P only).

2. To loosen laces for refitting over anti-exposure assemblies, proceed as follows:

a. Untie the securing knot, grasp the bottom loop of the lacing cord and pull down firmly forming a loop.

b. Work sides to loosen laces and extend garment fitting area.

c. Refit as in step 1 above.

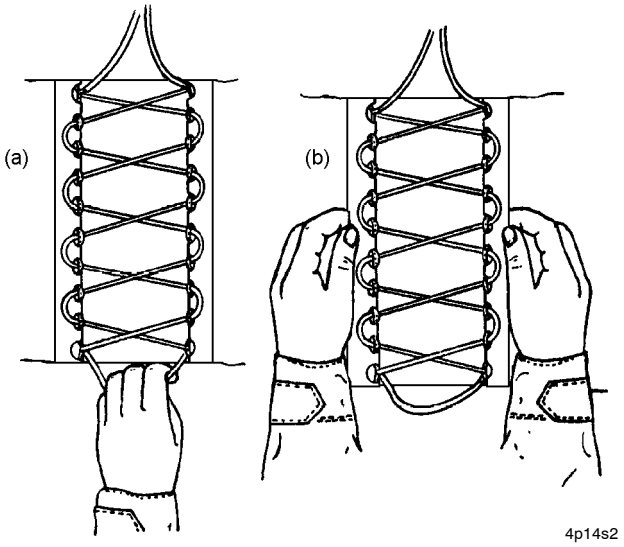

Step 2 - Para 4-15

4-16. CUSTOM FITTING TO MAKE GARMENT SMALLER. If the garment does not fit after full lace adjustment but is the correct size based on body positioning, the following procedure may be used to modify those parts of the garment which are too large.

1. While aircrewmember is wearing anti-g garment, let out lace adjustment fully.

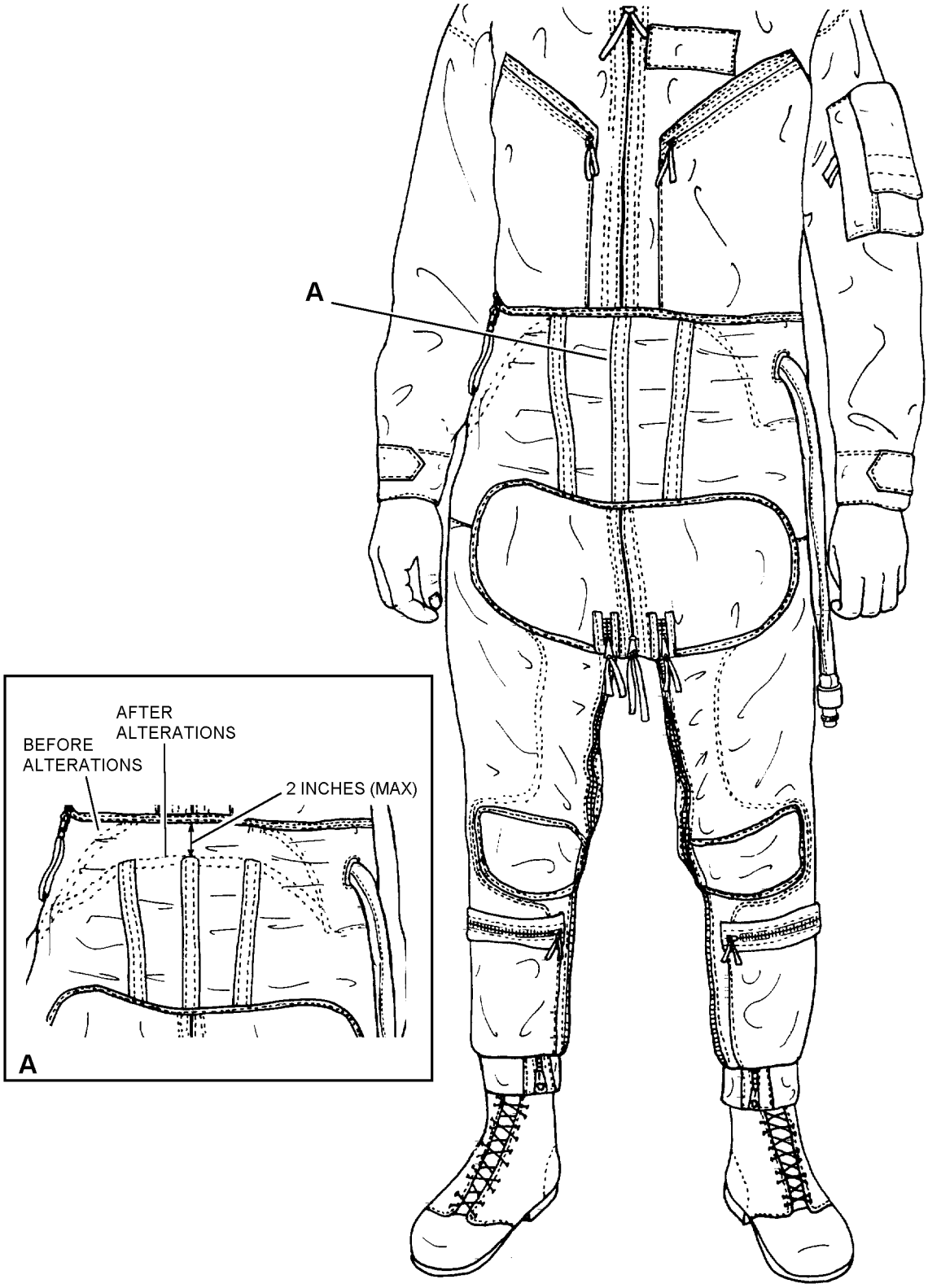

4-1

Figure 4-1. CSU-15/P Anti-g Garment

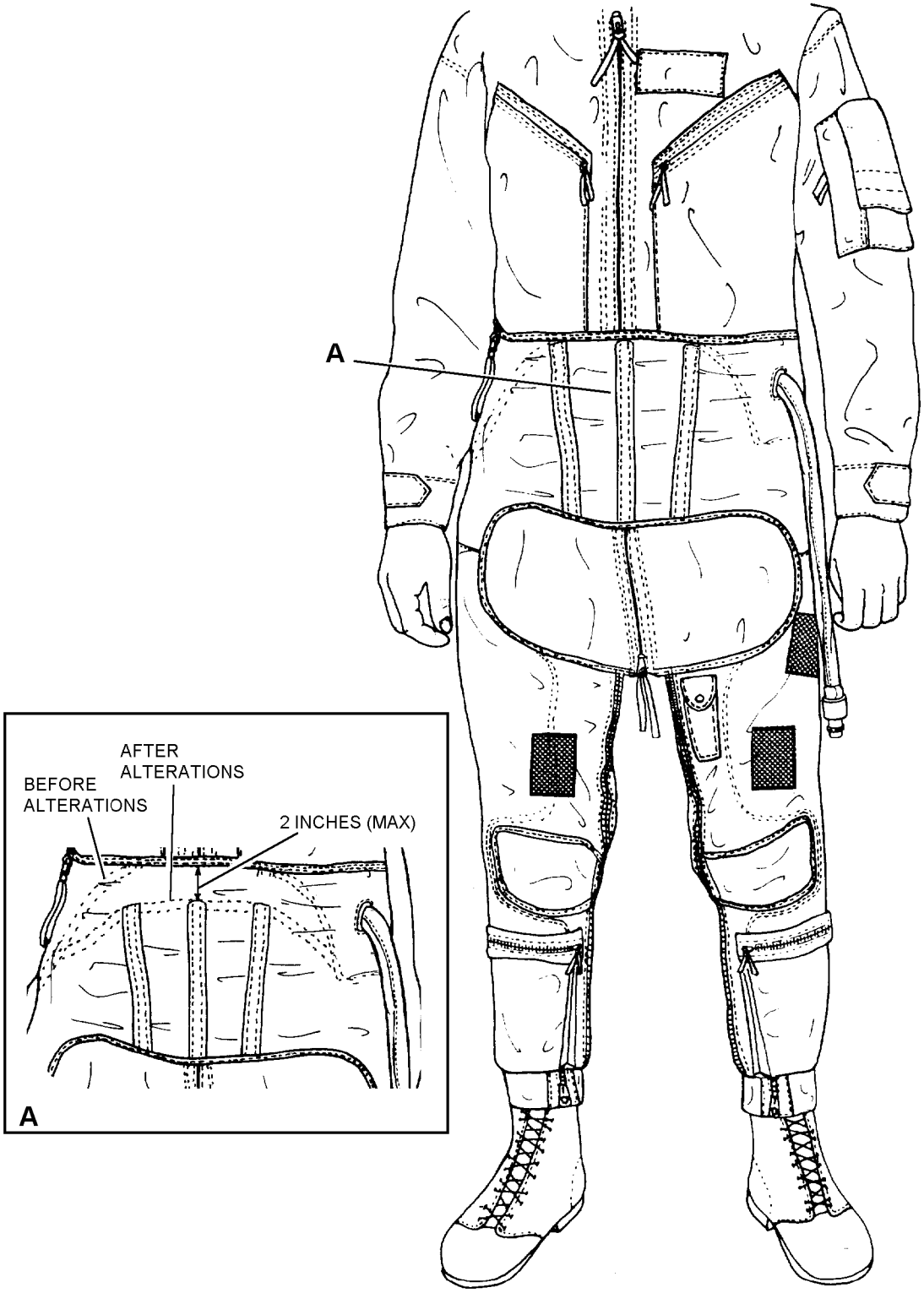

4-2

Figure 4-2. CSU-13B/P Anti-g Garment

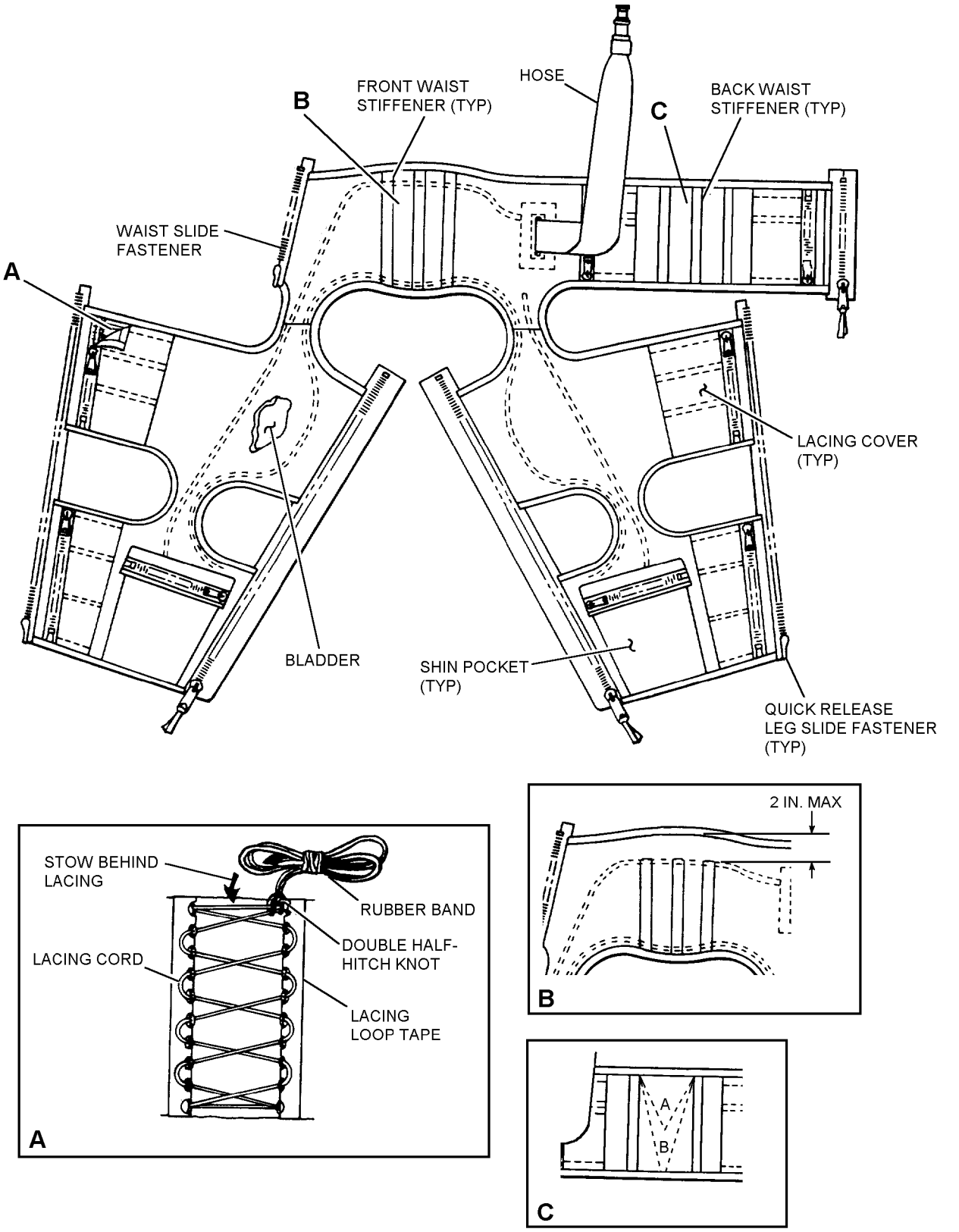

4-3

Figure 4-3. CSU-15/P Parts Nomenclature

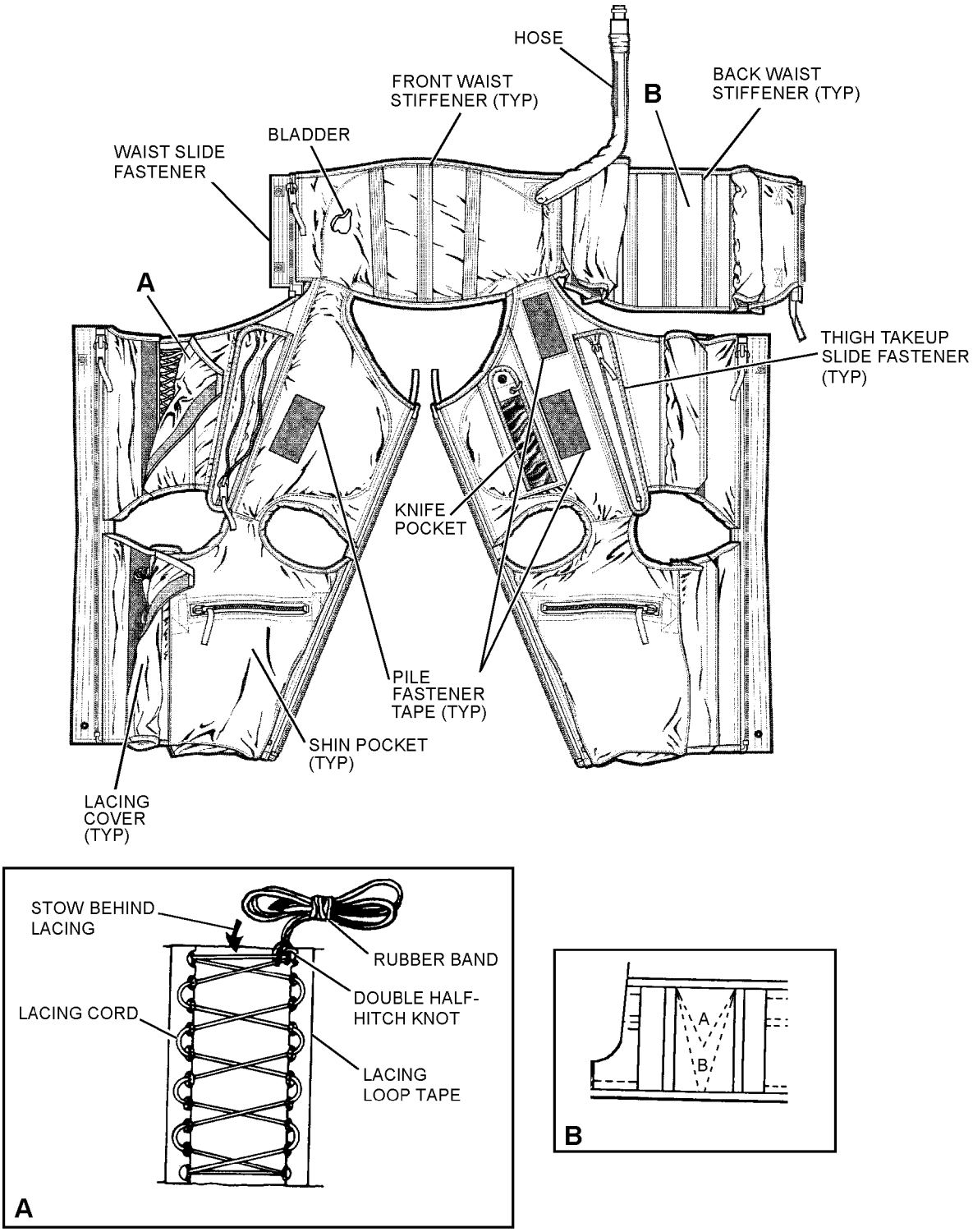

004004

Figure 4-4. CSU-13B/P Parts Nomenclature

WARNING

Ensure that pleat does not interfere with waist bladder function.

2. Form a pleat in the waist between the hose and the zipper of the adjustment lace cover. The size of the pleat should allow the waist to fit slightly loose while in the proper body position.

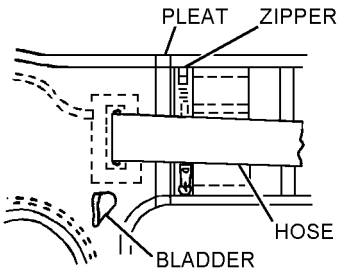

4p15s2

Step 2 - Para 4-16

3. Mark the position of the pleat with chalk.

4. Repeat the procedure for the thigh by forming a pleat between the lace adjustment cover stitching and the bladder. The pleat should be as close to the lace adjustment as stitching will permit.

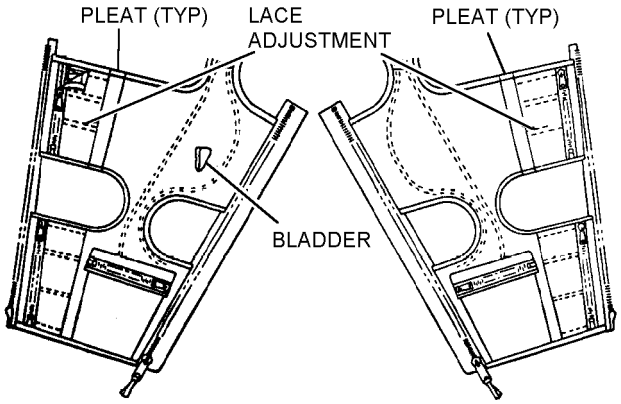

4p15s4

Step 4 - Para 4-16

5. Mark the position of the pleat with chalk.

6. Have aircrewmember remove the garment.

7. Lay the garment out flat and refold the pleats as marked.

NOTE

All stitching shall be in accordance with ASTM-D-6193, Type 301 lockstitch, 7 to 10 stitches per inch with minimum 1/2-inch backstitch. Refer to paragraph 4-17 for materials required.

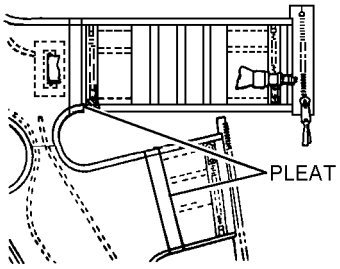

4p15s7

Step 7 - Para 4-16

8. Stitch the pleats. Secure at each end using a boxstitch 1/8-inch from the edge of each side of the pleat. Backstitch 1/2-inch on all stitching.

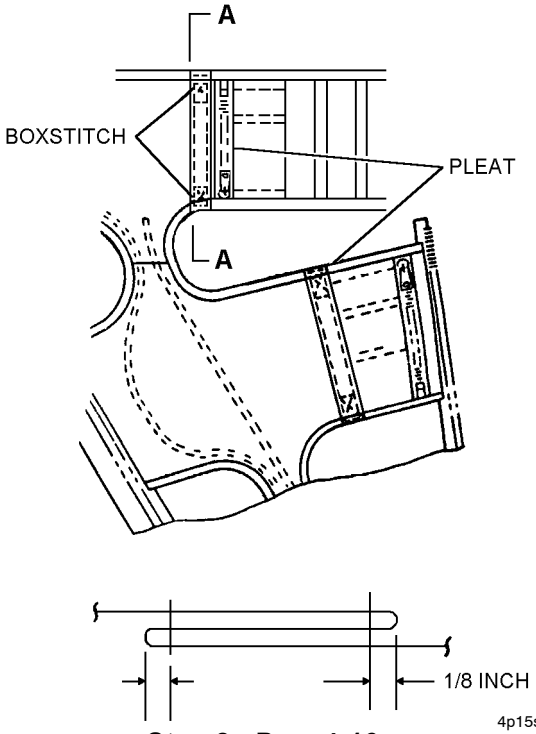

4p15s8

Step 8 - Para 4-16

9. Reducing the calf size does not usually require the aircrewmember to don the anti-g garment, as there is very little excess material to work with. Proceed with steps 10 through 12 if it has been determined that reducing the size of the calf is needed.

NOTE

Modifying the calf is only authorized on the medium and large anti-g garments as the smaller sizes do not have enough excess material to perform the procedure. Even modifying the medium and larger sizes will not make a significant difference in the fit of the anti-g garment, thus this procedure for modifying the calf has very limited benefit to very few aircrewmembers.

4p15s9

Step 9 - Para 4-16

10. Form a pleat between the lace adjustment cover stitching and the shin pocket by placing the existing row of stitching of the lacing adjustment cover edge on top of the existing row of stitching of the shin pocket edge.

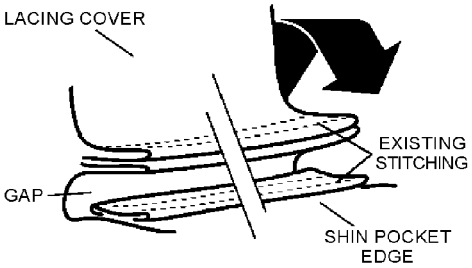

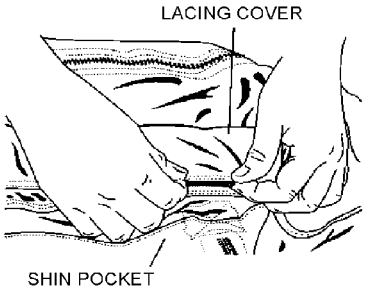

4p15s10

Step 10 - Para 4-16

WARNING

Ensure that pleat does not interfere with calf bladder function.

11. Stitch the pleat in place with two rows of stitches, side by side, down the entire length of the overlapping lacing adjustment cover edge and the shin pocket edge. Reinforce using minimum of 1-inch backstitching.

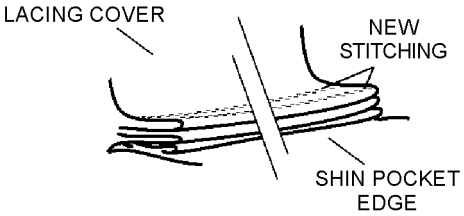

4p15s11

Step 11 - Para 4-16

12. Have aircrewmember don garment. Refit in accordance with paragraph 4-15.

13. Inspect anti-g garment in accordance with paragraph 4-26.

4-17. CUSTOM FITTING TO MAKE GARMENT LARGER. If the garment is not large enough to fit around the leg after the lacing adjustment has been let out fully, the following procedure may be used to modify those parts of the garment which are too small.

Materials Required

Quantity	Description	Reference Number
As Required	Thread, Aramid, Size E, Sage Green	MIL-T-43636 NIIN 00-496-9901
	-or-	
	Thread, Nylon, Type II, Class A, Size E, Sage Green	V-T-295 NIIN 00-204-3884 or equivalent
As Required	Cloth, Twill, Aramid High Temperature Resistant, Sage Green (CSU-15/P only)	MIL-T-81814 NIIN 01-031-9403
	-or-	
	Cloth, Plain Weave, Type II (CSU-13B/P only)	MIL-C-83429 NIIN 01-147-2064 (Note 1)

Notes: 1. NIIN 01-147-2064 has been discontinued without replacement in the supply system. NAVAIR Clothing Team has plentiful supply on hand and can distribute in 5 yard increments to any fleet activities who need it. Please contact member of the Personal Protective Clothing Team to request material. Team Members are listed on the PMA202 website.

1. Have aircrewmember don anti-g garment with lacing adjustment let out fully.

2. If leg sections are too tight, or there is insufficient fabric to go around leg, determine additional amount of fabric necessary to provide proper fit.

3. Have aircrewmember doff garment.

4. Remove lacings from adjustment panel.

5. Cut fabric strip 2 inches wider than measurement determined in step 2, and 1 inch longer than length of lacing panel.

6. Hem ends of strip.

7. Stitch strip to lacing panel using seam type LSq, stitching shall be in accordance with ASTM-D-6193, Type 301 lockstitch, 7 to 10 stitches per inch with minimum 1/2-inch backstitch.

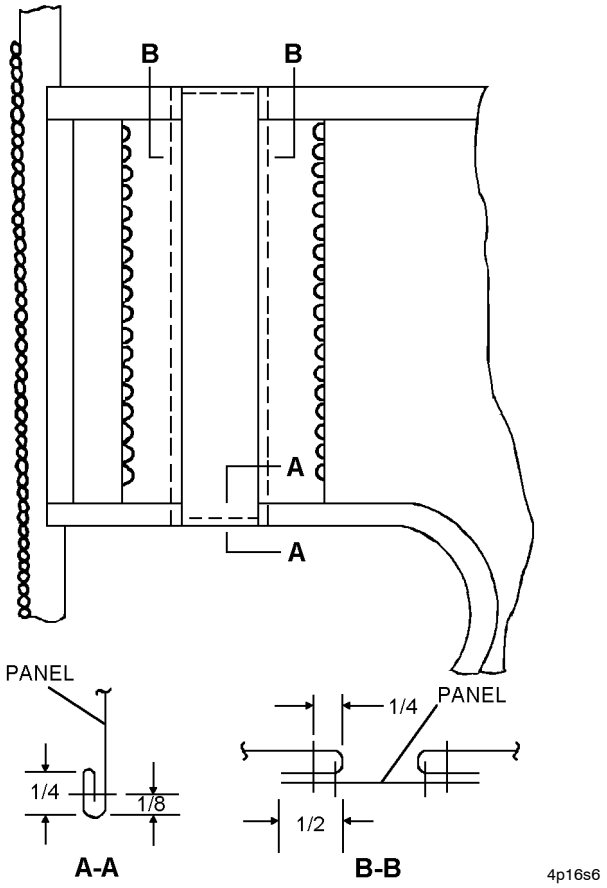

Steps 6 and 7 - Para 4-17

8. Replace lacings in adjustment panel.

9. Have aircrewmember don garment. Refit in accordance with paragraph 4-15.

10. Inspect anti-g garment in accordance with paragraph 4-26.

4-18. CUSTOM FIT KNEE HOLE PANEL. (For instructor/student pilots flying in T-45 Aircraft only). This custom fit procedure is an alteration to the anti-g garment to reinforce the fabric in the knee area to eliminate the fabric from bowing out when the aircrewmember's knee is bent. This alteration is intended to prevent binding between control stick in the aircraft and the pilots anti-g garment that may occur during dynamic maneuvers. This alteration may be done at the option of the individual instructor/student. To reinforce the knee hole of the anti-g garment, proceed as follows:

Materials Required

Quantity	Description	Reference Number
As Required	Cloth, Plain Weave, Aramid	MIL-C-83429 NIIN 01-147-2064 (Note 1)
As Required	Webbing, Type VIIIC 2 1/4 inch or equivalent	MIL-W-4088 NIIN 01-015-9434
As Required	Thread, Nylon High Temperature, Sage Green or Olive Drab	MIL-T-83193 NIIN 00-130-6245 NIIN 00-405-2252
	-or-	
	Thread, Nylon Type II, Size E, Sage Green	A-A-50195 NIIN 00-204-3884
	-or-	
	Thread, Size E	MIL-T-43636 NIIN 00-512-1103

Notes: 1. NIIN 01-147-2064 has been discontinued without replacement in the supply system. NAVAIR Clothing Team has plentiful supply on hand and can distribute in 5 yard increments to any fleet activities who need it. Please contact member of the Personal Protective Clothing Team to request material. Team Members are listed on the PMA202 website.

1. Fabrication of Fabric Knee Panel.

NOTE

Final fabricated panel is a rectangle sleeve of fabric encasing a piece of webbing. The webbing is used to add strength and help keep the shape of the panel. The panel is stitched closed on all four sides and is used to partially cover the back of the kneehole on the left and right legs of the anti-g suit.

All directions are for the application of panel onto the right leg of the anti-g suit. Application of the panel to the left leg is accomplished in the same manner if aircrewmember desires.

All stitching to be made using 301 Lockstitch, 8 to 10 stitches per inch with size "E" thread. Backstitch a minimum of 1/2 inch on all stitching.

a. Measure and cut a piece of aramid cloth 5 1/2 inches by 6 inches. Orient fabric so that 6 inch edges are at the top and bottom.

b. Fold the fabric in half so that the 5 1/2-inch edges meet creating a 3-inch wide by 5 1/2-inch tall piece of fabric.

c. Stitch raw ends of 5 1/2-inch edges together with a single row of stitches 3/8 inch from the edge.

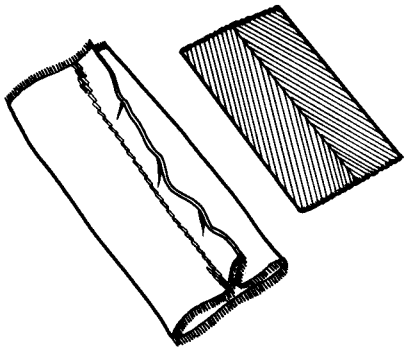

4p16as1c

Step 1c - Para 4-18

d. Turn inside out (seams inside).

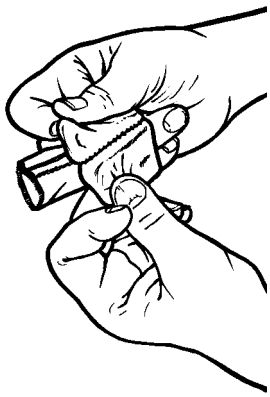

4p16as1d

Step 1d - Para 4-18

e. Orient the panel so the folded edge is on the right.

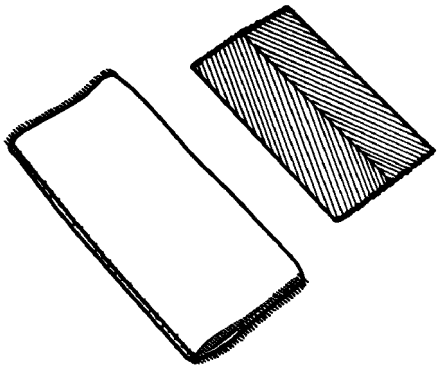

4p16as1e

Step 1e - Para 4-18

f. Cut 3 1/2 inch length of Type VIIIC (2 1/4 inches wide) webbing and sear edges.

g. Insert webbing into the sleeve with raw edges at the top and bottom.

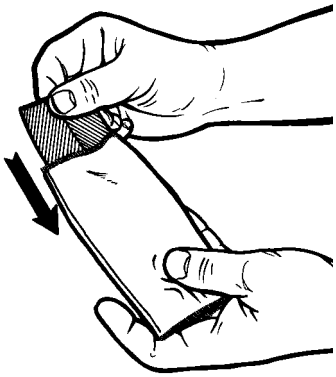

4p16as1g

Step 1g - Para 4-18

h. Tuck the top and bottom raw edges evenly inside the sleeve creating a panel of fabric encasing the piece of webbing with clean finished edges and a finished dimension of 2 1/2 inches wide by 3 3/4 inches tall.

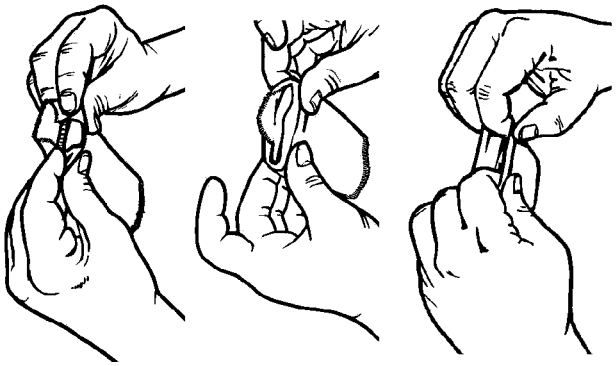

4p16as1h

Step 1h - Para 4-18

i. Stitch top, right and bottom edges of panel closed with one row of stitches 1/4 inch from the edge. Ensure that the webbing inside the panel is stitched in place during this step.

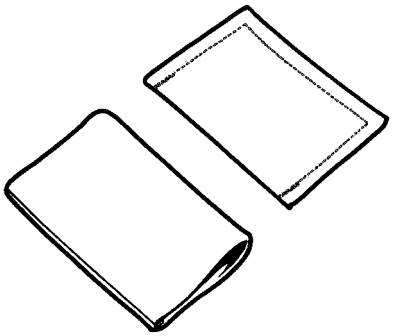

4p16as1i

Step 1i - Para 4-18

2. Stitching Fabric Panel to Anti-G Suit.

a. Lay out garment and unzip the waist and leg slide fasteners (anti-g hose to the technician's right).

b. On the right leg, locate the opening for the back of the knee between the thigh and the calf lacing cover. Position panel with its folded edge flush against the edge of the anti-g suit fabric sewn to the slider tape and centered over the back of the knee opening. When centered correctly, the top of the panel will be aligned directly below the edge of the thigh lacing cover pile tape and the bottom of the panel will be aligned directly above the calf lacing cover pile tape (Figure 4-5).

c. Stitch panel to the anti-g suit starting at the upper right edge of panel stitching towards the edge located against the slider tape, down the left edge and across the bottom with one row of stitching 3/8-inch from the edge.

d. Have aircrewmember don garment and sit with knees bent to ensure proper custom fit.

e. Inspect anti-g garment in accordance with paragraph 4-26.

f. Record alteration on the aircrew personal equipment record OPNAV 4790/159 card and document in accordance with COMNAVAIRFORINST 4790.2.

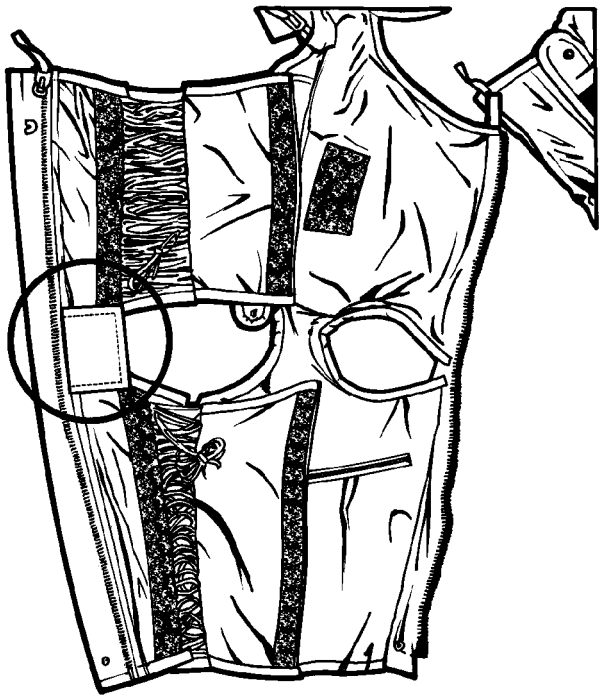

004004a

Figure 4-5. Proper Alignment of the Custom Fit Knee Hole Panel

4-19. HOSE (CSU-15/P ONLY). The anti-g hose must be fitted after correct garment size has been determined. To fit the anti-g hose, proceed as follows:

Materials Required

Quantity	Description	Reference Number
As Required	Tape, Insulation, Electrical, Pressure Sensitive, 3/4-InchWide	MIL-I-24391 NIIN 00-419-4291 or equivalent
As Required	Insulation Sleeve, Heat Shrinkable, Polyolefin, Flexible (Class 1 or 3) (Note 1)	MIL-I-23053/5A NIIN 00-990-9911
1	Heat Gun	P/N 6966C(78976) NIIN 01-037-7268

Notes: 1. Use of heat shrinkable tubing to cover clamp is optional.

1. Have aircrewmember don anti-g garment and sit in aircraft. Attach quick disconnect on hose to aircraft supply system. If hose is too long, measure and mark distance to be shortened.

2. Lay hose out flat. In a single operation, cut outer covering, inner hose, and spacer/reinforcement at mark made in step 1. Sear completely around end of outer cover to prevent fraying.

3. Remove tape, clamp, and severed portion of hose from quick disconnect connector.

4. Position spacer/reinforcement on rubber extension of connector (Figure 4-6). Butt end against raised portion of connector, and cover with three turns of tape (MIL-I-24391).

5. Slide inner hose (bladder material) over connector and butt against raised portion of connector. Ensure that spacer/reinforcement is not twisted. Secure with three turns of tape (MIL-I-24391).

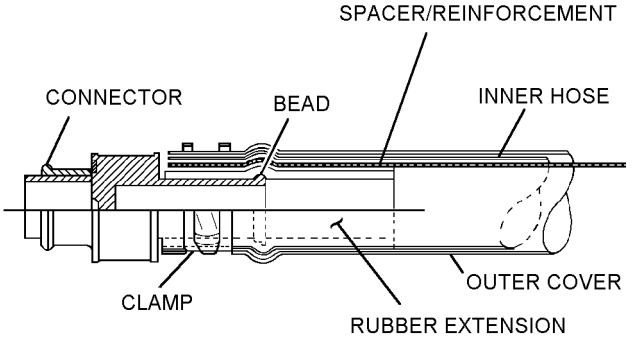

004005

Figure 4-6. Assembly of Hose and Quick Disconnect Fitting

NOTE

In some instances it may be necessary to build up outside diameter of hose area under clamp with three to six turns of electrical insulation tape (MIL-I-24391) to attain sufficient tightening of clamp.

6. Slide outer cover of hose over inner hose and butt against raised portion of connector. Install clamp as shown in Figure 4-6. Cover clamp with three turns of tape (MIL-I-24391) or slide heat shrinkable insulation sleeve over clamp and apply heat with heat gun until sleeve shrinks tightly over clamp.

7. Ensure that fitting is properly inserted in hose and clamp properly positioned between raised bead and body. Ensure that clamp is tightened sufficiently by grasping hose and jerking sharply on fitting.

4-20. MODIFICATIONS.

4-21. The CSU-13B/P and CSU-15/P anti-g garments should be updated by comparing the configuration of the garment with the directives listed in Table 4-2. Repairs, fabrications and installations to maintain serviceability are listed in Table 4-3.

4-22. ALTERATION OF CSU-13B/P AND CSU-15/P ANTI-g SUITS. To ensure proper fit of small stature aircrewmembers, alteration of the CSU-13B/P and CSU-15/P anti-g suits shall be accomplished by performing the following steps:

Materials Required

Quantity	Description	Reference Number
As Required	Thread, Size E	MIL-T-43636 NIIN 00-512-1103 -or- NIIN 00-496-9901
As Required	Chalk, Marking	SS-C-266 NIIN 00-164-8893

Materials Required (Cont)

Quantity	Description	Reference Number
As Required	Tape, Nylon Type III, 1-Inch	MIL-T-5038 NIIN 00-176-8085 -or- NIIN 00-753-6144
1	Razor, Surgical Preparation	MIL-R-36540 NIIN 01-363-1212
As Required	Thread, Size E	V-T-295 NIIN 00-204-3884 or equivalent

1. Perform a leak test in accordance with paragraph 4-27. If anti-g suit passes the leak test proceed to step 2. If anti-g suit fails leak test it shall be removed from service.

2. Fit the anti-g suit to the aircrewmember in accordance with paragraph 4-13.

3. Ensure the waist panel lacing loops, in rear of anti-g suit, have 1 inch separation from top to bottom on both the right and left side.

4. With the aircrewmember standing, check for excess slack in the anti-g suit by finding the top center of the rear panel and pulling straight out away from the aircrewmember's back.

5. With the top panel pulled out, pinch the panel together and mark the right and left panel where they meet, with chalk.

NOTE

Chalk shall be non-permanent type tailors chalk or regular chalk.

6. Repeat this procedure on the bottom panel.

Table 4-2. Anti-g Garment Directives

Description of Modification	Application	Modification Code
None		

Table 4-3. Repairs/Fabrications/Installations

Description of Repairs/ Fabrications/Installations	Application	Paragraph Number
Shortening of Hose and/or Clamp Replacement	All Anti-g Garments	4-19
Replacement of Loose or Broken Stitching	All Anti-g Garments	Note 1 4-30
Replacement of Lacing Cord	All Anti-g Garments	4-33
Replacement of Lacing Cover Slide Fasteners with Hook and Pile Tape	All CSU-15/P Anti-g Garments	4-34
Replacement of Sliders and Top Stops on Closure Slide Fasteners	All CSU-15/P Anti-g Garments	4-35
Repairs of Small Holes, Tears, Snags	All CSU-13B/P Anti-g Garments All CSU-15A/P Anti-g Garments	Note 1 4-30
Replacement of Slide Fasteners	All Anti-g Garments	4-31
Replacement of Damaged Hook and Pile Tape	All CSU-13B/P Anti-g Garments	4-32
Replacement of Broken/Damaged/Missing Metal Hook and Bar Fasteners	All CSU-13B/P Anti-g Garments	4-36

Note: 1. It is preferable to use aramid thread conforming to MIL-T-43636, Size E, Sage Green for repairs. If unavailable, use V-T-295, Size E, Sage Green.

NOTE

The distance between the top chalk marks and the bottom chalk marks may not be the same.

7. Have the aircrewmember sit in a straight back chair and locate their lowest rib. If the top of the abdominal bladder extends over the lower ribs or if the inflation of the bladder causes discomfort to the lower rib cage, the height of the abdominal bladder can be reduced by using the following steps:

8. Mark the outside of the anti-g suit just below the rib on the right, left and center with chalk.

9. Have aircrewmember remove anti-g suit.

10. Find the 4 chalk marks made in steps 5 and 6. Ensure the chalk marks are on the panel and not the binding tape.

11. Carefully remove the stitching from the top and bottom of the back panel binding tape.

12. Remove the stiffeners on the back panel as required (Figure 4-3 or Figure 4-4). Normally only the middle stiffener is removed.

13. Pull the center of the back panel to the inside of the anti-g suit and fold the anti-g suit back on itself.

NOTE

All stitching shall be in accordance with ASTM-D-6193, Type 301 lockstitch, 7 to 10 stitches per inch with minimum 3/4-inch backstitch.

14. With the top chalk marks aligned together and the bottom chalk marks aligned together make a seam in the anti-g suit from top to bottom.

NOTE

If there is no excess material at the bottom of the back panel, a vertical dart stitch will terminate at the center of the back panel.

15. With the back panel seam sewn in, fold the excess material flat to the right or left side and sew a row of top stitches on the outside of the folded material.

16. With the back panel top stitched secure the fold made in step 14 to the back inside panel with one row of stitches approximately 1/8 inch from the folded edge.

NOTE

If only a dart was sewn from the center to the top, the dart shall be folded and top stitched and the loose dart shall be sewn to the back inside panel with 1 row of stitches.

17. If there is allowable surface area without overlapping of stiffener, reinstall the stiffeners removed in step 12 as follows:

a. If there is not enough back panel area for all 3 stiffeners to be reinstalled or only 1 stiffener was removed and there is not area for the stiffener to be reinstalled it can be discarded.

b. Using the lacing cover seam edge as the reference point, find the center top and bottom of back panel.

c. Center a stiffener over the center of the back panel and sew the stiffener with a row of stitches around the outside edge approximately 1/16 inch.

d. Center the remaining stiffeners between the lacing cover seam edge and the center stiffener and sew one on the right and one on the left in the same manner as step c.

18. Fold the excess top binding tape back on itself and sew to the back panel.

19. Fold the excess bottom binding tape back on itself and sew to the back panel.

20. Carefully remove the stitches from the hose side of the waist bladder cover on the front of the anti-g suit working to approximately 4 inches above where the bladder goes into the right leg.

NOTE

The minimum distance for this alteration is 1 inch, and the maximum is 2 inches. If the markings are less than 1 inch below the original stitch line that joined the abdominal bladder casing to the front abdominal panel, draw a second set of markings that is at least 1 inch below the original stitch line. If the markings are more than 2 inches below the original stitch line that joined the abdominal casing to the front abdominal panel, draw a second set of markings that is no more than 2 inches below the original stitch line.

21. Transfer the chalk mark positions made in step 8 to the inside of the anti-g suit.

22. The bladder tab can be sewn to the bladder cover with 1 row of stitches to hold it in place.

23. You may want to chalk in the seam line from the 3 points you transferred from the front.

24. Push the bladder down toward the bottom of the anti-g suit and ensure that the bladder system cannot be damaged and align the bladder seam to chalk mark.

25. Sew 2 rows of stitches from the right to the left to approximately 1 inch distance from the inlet hose exit point. Rows of stitches shall be no greater than 1/4 inch apart. Be careful not to pierce the bladder.

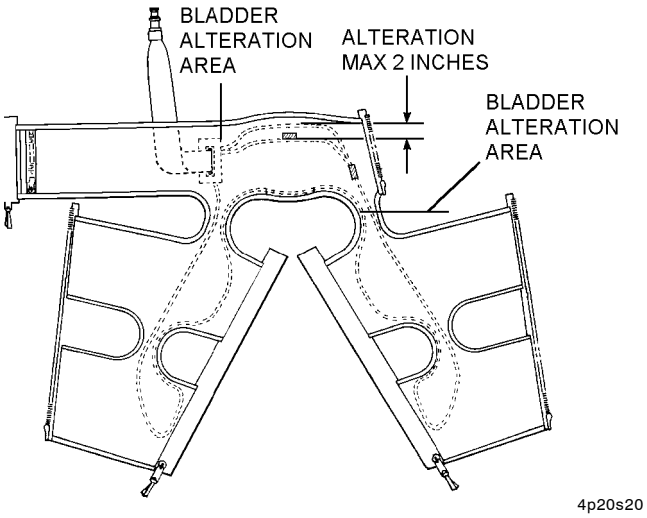

Steps 20 thru 25 - Para 4-22

26. Cut 3, 9-inch lengths of nylon tape, MIL-T-5038 (NIIN 00-176-8085 or 00-753-6144).

NOTE

The cut length of the strap shall be 9 inches for the 1 to 2 inches of adjustment made to the abdominal bladder.

27. These 3 restraining straps will be added to prevent upward movement of the bladder during inflation.

28. Align the straps on the inside of the front abdominal panel so that they are placed in line with and over the webbing stiffeners on the outside of the front abdominal panel.

29. Turn straps under 3/4 inch at both ends and secure onto the inside of the front abdominal panel using a 3/4-inch crossbox stitch.

30. The 3/4-inch fold in the strap will be placed with the seared edge at the top of the back bladder casing, prior to making the top crossbox stitch.

31. The folded edge of the 3/4-inch fold in the strap will be horizontally aligned with the bottom edge of the back bladder casing, prior to making the bottom crossbox stitch.

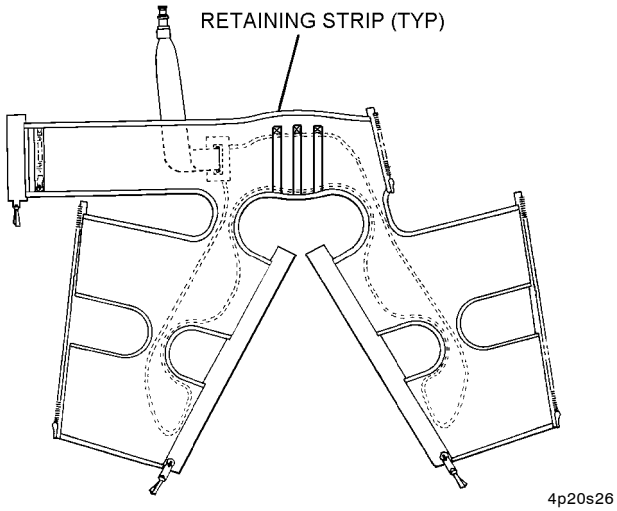

Steps 26 thru 31 - Para 4-22

32. Aircrewmember shall have a fit check completed with their anti-g suit prior to step 33.

33. The suit must pass a leak test in accordance with paragraph 4-27, prior to being placed back into service.

4-23. MAINTENANCE.

4-24. The aircrewmember's responsibility for maintenance of the anti-g garment is limited to Pre/Postflight Inspection only. Repairs and maintenance actions required shall be performed by organizational level maintenance or above. Defects in the bladder system shall be considered cause for replacing entire garment. All maintenance actions and inspections shall be recorded in accordance with COMNAVAIRFORINST 4790.2.

4-25. PRE/POSTFLIGHT INSPECTION. The Pre/Postflight Inspection shall be performed by the aircrewmember prior to each flight. To perform the Pre/Postflight Inspection, examine the following:

1. Slide fasteners for secure attachment, ease of operation, and corrosion.

2. All seams for loose or broken stitching.

3. Outershell and hose covering for holes, tears, and abrasion.

4. Quick disconnect connector for nicks, corrosion, and proper operation.

5. Laces and lacer loops for secure attachment and wear.

6. (CSU-13B/P only) Hook and pile tapes for damage and secure attachment. Hooks and snaps for secure attachment and wear.

7. If discrepancies are noted, forward garment to Aviator's Equipment Branch for inspection/corrective maintenance.

4-26. SPECIAL INSPECTION. The Special Inspection shall be performed by an Aircrew Survival Equipmentman upon issue prior to placing the anti-g garment in service and every 180 days thereafter. The Special Inspection shall also be performed whenever a discrepancy is discovered during Pre/Postflight Inspection. The inspection consists of the Pre/Postflight Inspection and the following additional tasks:

1. Perform leak test in accordance with paragraph 4-27.

2. Repair any discrepancies after completion of leakage test.

3. Upon completion of any repair, perform a leak test in accordance with paragraph 4-27.

4. Document inspection in accordance with COMNAVAIRFORINST 4790.2.

4-27. LEAK TEST. To test a CSU-15/P or CSU-13B/P anti-g garment for leakage using the recommended leak test fixture (Figure 4-7), proceed as follows:

NOTE

Section 4-3 provides information on a recommended test fixture.

1. Close leak test fixture valve and attach quick disconnect fitting on garment hose to female fitting on leak test fixture.

2. Rotate three-way valve to air source and inflate bladder to 5 psig. Rotate valve to measuring device to check pressure.

3. The bladder pressure shall not drop more than 1.0 psig in the first 30 seconds. A pressure drop greater than 1.0 psig in the first 30 seconds constitutes a failure.

NOTE

When the leak test fixture is removed from the garment, the bladders may deflate. This is normal. The quick disconnect fitting on the garment hose is equipped with an emergency pressure relief valve. This allows for deflation of the bladders to 1.5 psi within 4 seconds upon disconnection from the air source. The garment will maintain an internal pressure of at least 0.3 psi for a 4-hour period. For use as a secondary flotation, the bladders may be orally inflated using the garment hose.

4. Remove leak test fixture and deflate the garment. Garments that fail the leak test shall be replaced.

4-28. SERVICE LIFE. The CSU-15/P and CSU-13B/P anti-g garments shall remain in service until they fail the leakage test.

4-29. REPAIRS. Repairs shall be performed by the lowest maintenance level possible. Damage which cannot be corrected by the repairs listed in Table 4-3 shall be considered cause for rejection. Rejected garments shall be scrapped in accordance with local supply procedures.

4-30. REPAIR OF SMALL HOLES, TEARS, SNAGS AND MISSING OR BROKEN STITCHING IN BASIC FABRIC (CSU-13B/P ONLY) . Repairs of small holes, tears, snags and missing or broken stitching in basic fabric shall be accomplished as follows:

NOTE

All stitching shall be in accordance with ASTM-D-6193, Type 301 lockstitch, 7 to 10 stitches per inch with minimum 3/4-inch backstitch.

1. Open seams or broken stitching shall be resewn.

2. Small holes, tears or snags, up to 7/8 inch shall be darned with a reinforcing patch on the underside. Reinforcement shall be of basic cloth, Specification MIL-C-83429. Use a circular darn for holes or snags and up-and-down or zigzag darn for straight tears.

3. Holes or tears in excess of 7/8 inch and not exceeding three inches shall be patched. With all edges of patch turned to inside 1/4 inch, patch will extend 3/4 inch beyond damaged area all around on the underside of the garment. Stitch in place to garment with a row of stitching 1/8 inch from edge of patch. On the outerside of garment turn under damaged edges approximately 1/4 inch all around and stitch 1/8 inch from edge. Patching material is listed in step 2.

NOTE

Care shall be taken in opening seams to reach damaged area so as not to damage the bladder system. All seams shall be restitched in original position.

4. Repairs of tears or worn areas in basic fabric covering bladders/knife pockets not in excess of 3 inches shall be made by stitching a patch to the outside of the cover/knife pocket.

a. Cut patch similar to that in step 3, except that the material for the knife pocket patch shall conform to MIL-C-7219, Type III, Class 3. Cut patch for covering worn knife pockets 3-1/4 X 4-1/4 inches.

b. Mark location of tabs and interior bladder cover.

CAUTION

Do not puncture bladder.

c. Rip stitching on interior bladder cover sufficient to permit subsequent sewing of patch/knife pocket cover.

d. Sew a 12-inch length of 1/2-inch wide tape (any type) to bladder tab(s) for later use to pull bladder tabs through tab holes in bladder cover.

e. Pin bladder and interior bladder cover out of the way using bladder tabs with safety pins.

f. Hem all sides of patch/knife pocket cover by turning under 1/4 inch and stitching as indicated in step 3 above.

g. Pin patch/knife pocket cover to exterior of bladder cover/knife pocket.

h. Stitch patch material/knife pocket cover to garment as indicated in step 3. Stitch knife pocket cover across bottom and along both sides.

i. Remove safety pin(s) installed in step 4e. Pin interior bladder cover in place with approximately 10 to 12 straight pins. Stitch bladder cover with two rows of stitching. The first row of stitching to be 1/16 inch from the edge and second row 1/16 inch gage.

j. Pull bladder tabs through holes in bladder cover using the tape sewn on tab(s) in step 4d. Cut the tapes and stitch bladder tabs with two rows of stitching as outlined in step 4i.

k. After repair, leak test garment in accordance with paragraph 4-27.

5. Suit damage in metal stay area shall be repaired/reinforced.

NOTE

Prior to sustaining damage, garment may be reinforced in metal stay areas as a preventative maintenance measure.

4-31. REPLACEMENT OF SLIDE FASTENERS. Broken or inoperative slide fasteners shall be replaced in the same manner as originally installed. Refer to Table 4-4.

4-32. REPLACEMENT OF DAMAGED HOOK AND PILE TAPE (CSU-13B/P ONLY). Damaged hook and pile tapes shall be replaced. The hook fastener tape shall conform to Type I, Class 2 of MIL-F-21840. Pile fastener tape shall conform to Class 2, MIL-F-21840. Color shall approximate the color of the basic fabric. Refer to Table 4-5 for dimensions of fastener tape.

4-33. REPLACEMENT OF LACING CORD. To replace the lacing cord, proceed as follows:

Materials Required

Quantity	Description	Reference Number
As Required	Cord, Polyamide, High Temperature-Resistant	MIL-C-81104 NIIN 01-218-8409
	-or-	
As Required	Cord, Type I	MIL-C-83242 NIIN 01-013-4086
As Required	Beeswax	NIIN 00-253-1171
As Required	Paraffin	NIIN 00-285-2041

NOTE

The color of the lacing cord shall approximately match the color of the outershell clutch.

1. Unlace damaged or defective cord and discard.

2. Cut a new length of lacing cord. The lacing cord shall be cut in accordance with the following lengths:

a. Abdomen 88 inches.

b. Thigh 128 inches.

c. Calf 120 inches.

d. Bladder 16 inches.

3. Dip each cut end into an approximately 50/50 beeswax/paraffin mixture to a depth of 1 inch to prevent fraying.

4. Relace using new cord and refit in accordance with paragraph 4-13.

Table 4-4. Slide Fasteners (A-A-55634)

Suit Size	Location	NIIN No.	Type	Style	Size	Length (Inches)
All sizes	Waist closure	5325-00-170-2999	IV	7	MHS	8 1/2
All sizes	Pockets	5325-00-164-9752	I	7	MS	8
Small regular	Waist comfort slide fasteners cannot be replaced due to the close distance to the bladder.					
	L/H Leg opening	5325-00-935-5977	IV	7A	MHS	26
	R/H Leg opening	5325-00-186-6237	IV	8A	MHS	26
Small long	L/H Leg opening	5325-00-164-0814	IV	7A	MHS	27 1/2
	R/H Leg opening	5325-00-164-9984	IV	8A	MHS	27 1/2
Medium regular	L/H Leg opening	5325-00-935-5978	IV	7A	MHS	27 1/2
	R/H Leg opening	5325-00-164-9971	IV	8A	MHS	27 1/2
Medium long	L/H Leg opening	5325-00-935-5981	IV	7A	MHS	29
	R/H Leg opening	5325-00-164-9984	IV	8A	MHS	29
Large regular	L/H Leg opening	5325-00-935-5979	IV	7A	MHS	29
	R/H Leg opening	5325-00-164-0826	IV	8A	MHS	29
Large long	L/H Leg opening	5325-00-164-9913	IV	7A	MHS	30 1/2
	R/H Leg opening	5325-00-164-9772	IV	8A	MHS	30 1/2
Large X-long	L/H Leg opening	5325-01-471-3280	IV	7A	MHS	32
	R/H Leg opening	5325-01-471-3282	IV	8A	MHS	32
SL/ML/LL/LXL	Comfort Zipper	5325-00-164-0827	I	3	MS	12 1/2
MR/LR	Comfort Zipper	5325-00-164-0827	I	3	MS	12

Notes:

1. Activities having problems ordering fasteners via the supply system can open purchase the zippers directly from the manufacturer (YKK, an approved government source) by calling Diversified Marketing Group at (610) 667-5589. They will ask you for the NIIN and build an approved fastener based on the specifications belonging to that NIIN.
2. This table reflects Federal Specifications V-F-106F (e.g. Type and Style) even though the standard was superseded by Commercial Item Description (CID) A-A-55634 in March of 1998. Below you will find the basic specifications for the fasteners needed in the G-Suit so as to make future purchases easier. Please note that both the V-F-106F and the A-A-55634 standards are listed (Notes 4 and 5).
3. All slide fasteners are Size Medium Heavy Special (MHS) or Medium Special (MS) and slide in an upward direction.
4. Specs for the V-F-106 Standard Waist and Leg Opening Fasteners are as follows: The R/H Fastener is a Type IV, Style 7, Separating, Non-reversable fastener with an automatic lock, open top stop, closed bottom stop, right hand separating unit, single slider arrangement. The L/H Fastener is identical to the R/H Fastener except that the Style is 8 on the L/H Fastener. The Waist Fasteners are identical to the R/H Fastener.
5. Specs for the A-A-55634 Waist and Leg Opening Fasteners are as follows: The R/H Fastener is a Type III, Style 7A, Separating, Non-reversable fastener with an automatic lock, open top stop, closed bottom stop, right hand separating unit, single slider arrangement. The L/H Fastener is identical to the R/H Fastener except the Style is 8A on the L/H Fastener. Waist Fasteners are identical to the R/H Fastener.

Table 4-5. Dimensions of Fastener Tape

Size of Anti-g Garment	Body Lacer Covers (Note 1)	Leg Lacer Covers (Note 1)	Hose Retainer (Note 2)	(Inches) Check List Retainer (Note 3)
Small regular	1 by 9-1/2	1 by 10 5/8	4	2 by 4
Small long	1 by 9-1/2	1 by 11 1/2	4	2 by 4
Medium regular	1 by 10	1 by 10 7/8	4	2 by 4
Medium long	1 by 10	1 by 11 3/8	4	2 by 4
Large regular	1 by 10	1 by 10 7/8	4	2 by 4
Large long	1 by 10	1 by 11 1/4	4	2 by 4
Large X-long	1 by 10	1 by 11 1/4	4	2 by 4

Notes:
1. Two shall be required for each anti-g garment.
2. One shall be required per anti-g garment. The width shall be 1 inch hook fastener tape and 2 inches for the pile fastener tape.
3. Two of the pile fastener tape shall be required.

4-34. REPLACEMENT OF LACING COVER SLIDE FASTENERS WITH HOOK AND PILE TAPE (CSU-15/P ONLY). To replace the lacing cover slide fasteners with hook and pile tape, proceed as follows:

Materials Required

Quantity	Description	Reference Number
As Required	Thread, Aramid, Size E, Sage Green	MIL-T-43636 NIIN 00-496-9901 or equivalent
	-or-	
	Thread, Nylon, Size E, Sage Green	V-T-295 NIIN 00-204-3884 or equivalent
As Required	Fastener Tape, Hook, Type II, Class I, 1-Inch Wide	MIL-F-21840 NIIN 00-935-6761 (Black) NIIN 00-104-5973 (Olive Green)
As Required	Fastener Tape, Pile, Class I, 2-Inches Wide	MIL-F-21840 NIIN 00-924-4930 (Black) NIIN 00-498-6631 (Olive Green) NIIN 00-405-2265 (Sage Green)

1. Carefully remove damaged slide fastener from lacing cover and garment, by removing attachment stitching, and discard.

2. Cut one piece of hook fastener tape the length of the lacing cover. Cut one piece of pile tape the length of the lacing cover and trim to 1 1/2-inch width, searing the cut edge.

NOTE

When attaching fastener tapes to the garment, be careful not to catch lacing loops or lacing cords in the stitching.

3. Place hook tape, hook side up, along edge of lacing loop tape. Sew to garment using a single row of stitching, 1/8-inch from the fastener tape edge on all four sides. Overstitch at least 1/2-inch.

4. Lap pile tape 3/8-inch under the edge of the lacing cover, with back side of pile tape next to the inside of the lacing cover and the seared edge under the lacing cover. Sew to garment, using a double row of stitching 1/8-inch from the fastener tape edge and 1/8-inch apart. Overstitch at least 1/2-inch.

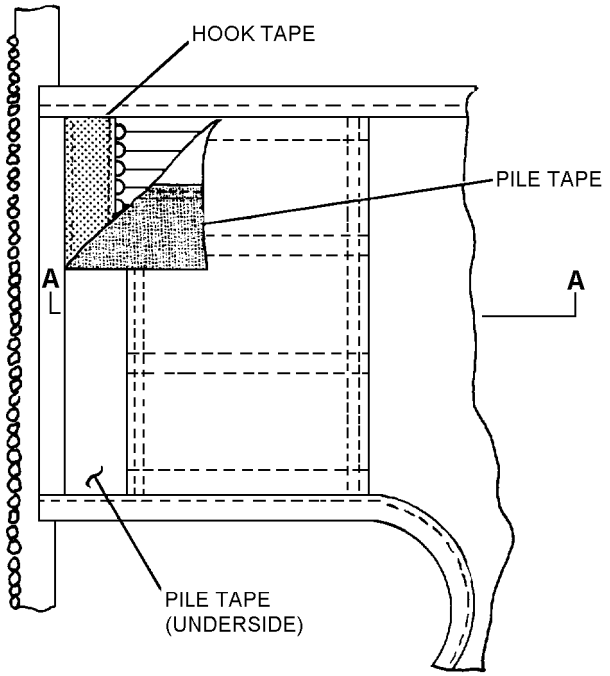

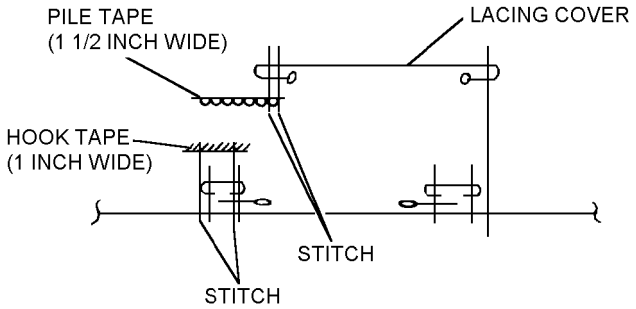

SECTION A-A

4p32s3

Steps 3 and 4 - Para 4-34

4-35. REPLACEMENT OF SLIDERS AND TOP STOPS ON CLOSURE SLIDE FASTENERS (CSU-15/P ONLY). To replace sliders and top stops on closure slide fasteners, proceed as follows:

Materials Required

Quantity	Description	Reference Number
As Required	Stop, Top	P100000K (03961) NIIN 01-201-3524
As Required	Slider and Pull Interlocking	NIIN 00-276-4940 (See note)

NOTE

Not all sliders are compatible with all slide fasteners. To assure compatibility, defective sliders should be replaced with sliders manufactured by the same manufacturer.

1. Using end cutters or snippers, remove the top stop from retainer side of slide fastener to allow for slider removal.

2. Pull the slider slightly past area where top stop was removed and without removing stitching, ease slider over cord or bead of tape (to which teeth are attached) and remove slider.

3. Place the replacement slider in approximately the same position as that of the slider just removed and back new slider over cord or bead of tape. Join both sides of slide fastener to check for proper closing.

4. Install new top stop as close to top tooth as possible and crimp tight to cord. Check for security.

4-36. REPLACEMENT OF THE METAL HOOK OR BAR FASTENER (CSU-13B/P ONLY).

Materials Required

Quantity	Description	Reference Number
As Required	Thread, Aramid	MIL-T-43636 NIIN 00-512-1103 or NIIN 00-496-9901
	-or-	
As Required	Thread, Nylon, Size E	V-T-295 NIIN 00-204-3884 or NIIN 00-616-0079 or Equivalent
As Required	Tape, Nylon, Type III, 1 Inch	MIL-T-5038 NIIN 00-176-8085 -or- NIIN 00-753-6144
As Required	Cap, Snap Fastener	MS27980-1B NIIN 00-359-6844
As Required	Socket, Snap Fastener	MS27980-6B NIIN 00-285-6250

Materials Required (Cont.)

Quantity	Description	Reference Number
As Required	Stud, Snap Fastener	MS27983-3 NIIN 00-276-4908
As Required	Post, Snap Fastener	MS27983-4 NIIN 00-276-4978

CAUTION

Do not damage the anti-g garment when removing hook and bar fasteners.

NOTE

Replacement of the metal hook or bar fastener is required when it is damaged or has broken from the garment. Metal hook or bar fasteners in good condition shall remain in service.

All stitching shall be in accordance with ASTM-D-6193, Type 301 lockstitch, 7 to 10 stitches per inch overstitching with a minimum of 3/4-inches.

1. If the hook fastener is not missing, remove it by placing a screwdriver under the hook fastener and prying up away from the garment. Remove the metal hook fastener back plate from the garment by cutting a small hole in the fabric over and above the metal hook fastener back plate. Discard the metal hook fastener back plate.

2. If the metal bar fastener is not missing, remove by placing a screwdriver under the bar fastener and prying up away from the garment. Discard bar fastener. Remove and discard the metal bar back plate of the bar fastener by cutting the sewn seam threads away from the top of the fastener webbing (as worn by the wearer).

3. Sear cut a 1-inch by 1-inch piece of nylon tape.

4. Sew the tape over the hole and area of the removed metal hook fastener.

5. Punch a hole through the center of the tape (installed in step 4) and anti-g garment fabric for the snap to fit through. Install the stud and post to the former metal hook fastener area.

6. Punch a hole through the center of the webbing of the metal bar fastener removed in step 2. Install the cap and socket through the webbing so they mate with the stud and post installed in step 5.

7. Ensure the snap is installed correctly and properly snaps together.

8. Document replacement/repairs/maintenance in accordance with COMNAVAIRFORINST 4790.2.

4-37. CLEANING. Cleaning shall be performed at the lowest maintenance level possible. To clean the anti-g garment, proceed as follows:

Materials Required

Quantity	Description	Reference Number
As Required	Detergent, Laundry	Commercial

CAUTION

Do not allow water to enter bladder. Do not dry-clean anti-g coveralls. Do not use bleaches or other additives. Do not use commercial laundry facilities. Do not wash garment in hot water.

1. Seal quick-disconnect fitting. Close all slide fasteners and hook and pile tape.

CAUTION

Securely pad quick-disconnect fitting with rag or suitable material to prevent damage to fitting or washer/dryer. Do not wash coveralls in hot water.

2. Hand launder or use an automatic washer that has a delicate cycle. Ensure water used is cold. Follow detergent manufacturer's recommendation for amount of detergent to be used. Wash cycle shall not exceed 3 minutes.

CAUTION

Do not wring garment; do not damage bladder or hose.

3. Rinse in cool, fresh water. Drain water. Repeat rinse until all traces of detergent have disappeared from rinse water.

CAUTION

Do not spin or tumble dry the CSU-13B/P.

Do not iron or press the CSU-13B/P or CSU-15/P.

The CSU-15/P may be dried in a clothes drier using fluff cycle, no heat, for 20 minutes.

4. Hang garment on wooden hanger in a dry, well-ventilated area until dry, or machine fluff dry.

5. If slide fasteners do not function properly after laundering, a dressing such as paraffin or candle wax may be applied to the chain. Do not use oil or grease.

Section 4-3. Leak Test Fixture

4-38. GENERAL.

4-39. Leak test fixtures are not stocked in the supply system. They must be assembled locally. Most items should be readily available through supply. Items not available through normal supply channels shall be purchased locally, or fabricated at the organizational maintenance level or above.

4-40. CONFIGURATION.

4-41. Leak test fixtures are comprised of various connectors and couplings with attendant shutoff valves necessary to introduce and regulate a source of pressure into a bladder or cell. A measuring device must be provided to measure initial pressure and leakage (pressure drop).

NOTE

Leak test fixture configurations other than that shown in Figure 4-9 are allowed if they are able to obtain required readings.

4-42. The test fixture shown in Figure 4-9 is a basic fixture that can be adapted to most items of equipment and test requirements by substituting if required, manometer or gage. To operate the leak test fixture, proceed as follows:

NOTE

If needed, a multiplace liferaft pump Type I or III (MIL-P-8258) can be used with adaptable fittings as the air source.

1. Attach the device to a source of low pressure air.

2. Ensure connector is clamped on hose, and is leak-tight.

CAUTION

Inflate test item slowly, making frequent stops to check pressure. Refer to applicable section for correct leak test procedures.

3. Attach connector to test item. Rotate 3-way valve to air source and inflate test item. Rotate valve to gage, and read pressure. Repeat as necessary until proper pressure is attained.

Section 4-4. CSU-21/P22P-16 Counter Pressure Vest

4-43. GENERAL.

4-44. The CSU-21/P22P-16 Counter Pressure Vest (Figure 4-11) is worn on the upper torso, over the standard flight suit. The vest provides Chest Counter Pressure Breathing +Gz. Regulated oxygen, at a predetermined schedule, is supplied to the vest via the regulator for inflation of the vest under +Gz conditions.

4-45. CONFIGURATION.

4-46. The CSU-21/P22P-16 Counter Pressure Vest consists of a flame resistant cloth outershell which houses a pneumatic bladder. A front slide fastener closure provides easy donning and doffing and laces allow sufficient adjustment for correct fit. The vest valve is a fill/dump valve located in the end of the vest hose. It maintains the pressure differential between the vest and the mask at less than four inches of water at inspiratory pause.

4-47. APPLICATION.

4-48. The CSU-21/P22P-16 Counter Pressure Vest is a component of the Navy Combat Edge (NCE) A/P22P-16 Aircrew Protective Assembly. The NCE A/P22P-16 assembly is designed for use by aircrew personnel assigned to high performance aircraft that have the proper automatic g-valve installed.

4-49. MODIFICATIONS.

4-50. Currently there are no modifications authorized to the CSU-21/P22P-16 Counter Pressure Vest assembly (Table 4-6).

4-51. SERVICE LIFE.

4-52. The CSU-21/P22P-16 Counter Pressure Vest shall remain in-service until it fails leakage test and/or it can no longer be economically repaired.

4-53. FITTING.

4-54. Determine correct vest size by taking chest measurement while aircrew member is wearing undershirt and flight suit. Compare the values shown in Table 4-7 and select the correct size of vest. Proceed as follows:

1. Don the underwear and standard flight suit.

2. Open the front slide fastener on the vest and loosen all laces to full extension.

3. Don the vest by inserting arms and folding the left side of the vest over the right side.

4. Position the hook and pile tabs at the left shoulder.

5. Fasten the securing tab hook and close the front diagonal slide fastener. Close the side slide fasteners.

6. While the crewmember is standing, tighten both side laces evenly until the vest is comfortably snug (should not prevent full expansion of the chest).

7. Knot the laces close to the vest using a double half-hitch knot.

8. Instruct the crewmember to sit down and then readjust the lacings for comfort. Adjustments should be made so that the flat of the hand can be slid between vest and the flight suit at the shoulders without difficulty. Secure the excess lacings behind the lacing covers.

NOTE

The lacing may have to be readjusted after the crewmember wears the vest during flights.

9. Tie ends in an overhand knot when completed.

Table 4-6. CSU-21/P22P-16 Counter Pressure Vest Directives

Description of Modification	Application	Modification Code
None		

NOTE

Do not cut off extra laces.

10. Fake excess lacing cord, secure with a lightweight rubber band and stow behind tightened laces and lacing cover.

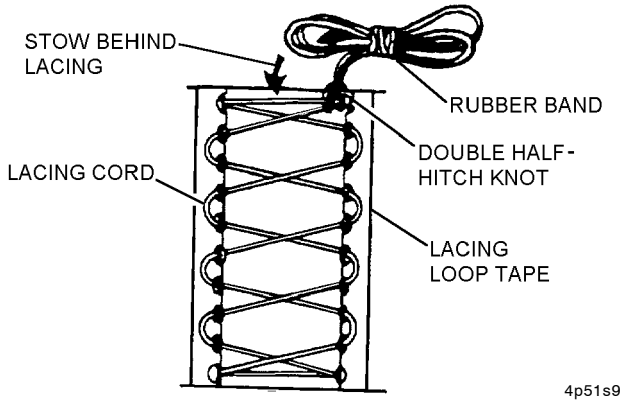

Steps 9 and 10 - Para 4-54

Table 4-7. Vest Sizes

Chest (Inches)	Vest Size	P/N
31.25 - 35.25	Small (S)	3473AS500-1 93D8517-1 (Gentex)
35.25 - 39.25	Medium (M)	3473AS500-2 93D8517-2 (Gentex)
39.25 - 43.25	Large (L)	3473AS500-3 93D8517-3 (Gentex)
	Extra Large (XL)	3473AS500-4 93D8517-4 (Gentex)

4-55. MAINTENANCE.

4-56. Aircrewmember responsibility for maintenance of the CSU-21/P22P-16 Counter Pressure Vest is limited to Preflight and Postflight Inspections. Required repairs and maintenance actions shall be performed by qualified Aircrew Survival Equipment personnel. Repairs, fabrications, and replacements required to maintain serviceability are listed in Table 4-8. The CSU-21/P22P-16 Counter Pressure Vest shall be updated by comparing configuration with directives listed in Table 4-6. All maintenance actions shall be documented in accordance with COMNAVAIRFORINST 4790.2.

4-57. INSPECTION.

4-58. Inspection requirements of the CSU-21/P22P-16 Counter Pressure Vest shall consist of Place-In-Service Inspection, Preflight/Postflight Inspection, and Special Inspections (90 and 360-Day). Any discrepancies noted shall be reported to the Aviation Equipment Branch for maintenance action. Inspections shall be documented in accordance with COMNAVAIRFORINST 4790.2.

4-59. PLACE-IN-SERVICE INSPECTION. Prior to being placed into service the counter pressure vest shall receive a Visual Inspection in accordance with paragraph 4-61 and a leak check in accordance with paragraph 4-64.

4-60. PREFLIGHT/POSTFLIGHT INSPECTION. The Preflight/Postflight Inspection shall be performed prior to and after each flight by the aircrew member to whom the anti-g garment is assigned. The Preflight/Postflight Inspection shall be a Visual Inspection in accordance with paragraph 4-61.

4-61. VISUAL INSPECTION. The Visual Inspection of the CSU-21/P22P-16 Counter Pressure Vest shall consist of the following:

1. Inspect garment for tears, holes, rips, damaged or missing parts, worn or frayed lacing, and worn or separated seams.

Table 4-8. CSU-21/P22P-16 Counter Pressure Vest Repairs, Fabrications, and Replacements

Description	Paragraph
Vest Fabric Repair (Not Over Bladder Area)	4-74
Vest Fabric Repair (Over Bladder Area)	4-75
Slide Fastener Replacement	4-76
Lacing Repair	4-77
Garment Binding Tape Replacement	4-78
Hook/Pile Fastener Replacement	4-79
Stowage Loop Replacement/Fabrication	4-80
Vest Supply Hose Replacement	4-81
Replacement of Vest Valve Assembly	4-84

2. Inspect outer shell and hose for holes, tears, and abrasions.

3. Inspect slide fasteners, hose, and cable connectors for corrosion and proper operation.

4. If required, clean assembly components in accordance with paragraph 4-87.

4-62. SPECIAL INSPECTION (90-DAY). A Special Inspection shall be performed by an Aircrew Survival Equipmentman every 90 days and whenever a discrepancy is noted during a Preflight/Postflight Inspection. The 90-Day Special Inspection shall consist of the following:

1. Perform Visual Inspection in accordance with paragraph 4-61.

2. If repairs/discrepancies have been corrected, a leak test shall be conducted in accordance with paragraph 4-64.

3. Document inspection in accordance with COMNAVAIRFORINST 4790.2.

4-63. SPECIAL INSPECTION (360-DAY). The 360-Day Special Inspection shall consist of the following:

1. Perform all steps in accordance with paragraph 4-62.

2. Perform a leak test in accordance with paragraph 4-64.

3. Document inspection in accordance with COMNAVAIRFORINST 4790.2.

4-64. CSU-21/P22P-16 VEST BLADDER LEAK TEST.

4-65. A leak test shall be performed on the CSU-21/P22P-16 counter pressure vest assembly whenever leakage is suspected, prior to issue, and every 360 days thereafter in conjunction with Special Inspection requirements. Leak checks shall be performed by a qualified Aircrew Survival Equipmentman. All maintenance actions shall be documented in accordance with COMNAVAIRFORINST 4790.2. Refer to Figure 4-7 and proceed as follows:

Materials Required

Quantity	Description	Reference Number
As Required	Oxygen, Aviator's Breathing, Type I	MIL-O-27210

Support Equipment Required

Quantity	Description	Reference Number
1	Leakage Tester, TTU-551/E	3549AS100
1	Stop Watch or Timing Device	—
1	Tensioning Tool	MS90387-1

WARNING

When working with oxygen, make certain that clothing, tubing fittings, and equipment are free of oil, fuel, hydraulic fluid, or/and combustible material. Fire or explosion can result when even slight traces of combustible materials come in contact with oxygen under pressure.

CAUTION

Ensure hoses are not kinked when performing leakage test.

NOTE

Do not attempt to perform any maintenance without becoming thoroughly familiar with the TTU-551/E Leakage Tester.

Prior to performing leakage test, ensure that a pretest check has been performed on the TTU-551/E Leakage Tester in accordance with Section 4-6 of this manual or NAVAIR 17-15GB-505.

For index letters referred to in this paragraph, refer to Figure 4-7 unless otherwise noted.

4-66. TEST SET-UP.

1. Ensure test set inlet pressure valve (F) is in the OFF position and oxygen supply cylinder valve is fully closed.

2. Connect regulator (A) to the oxygen supply cylinder. Ensure regulator (A) is not loaded by turning pressure adjusting handle counterclockwise until spring tension is released.

3. Ensure oxygen flow control valve (B) attached to regulator (A) is closed.

4. Slowly fully open the oxygen supply cylinder. Relieve any pressure indicated on regulator gage (I) by opening and closing the oxygen flow control valve (B).

5. Connect oxygen hose (C) to fitting (B1) of regulator (A) and connect the other end of oxygen hose (C) to the test set oxygen INLET (D).

6. Fully open oxygen flow control valve (B).

7. Adjust regulator (A) until 1.0 psig is indicated on regulator outlet pressure gage (I).

4-67. TEST PROCEDURE.

4-68. Vest Assembly.

1. Connect vest assembly fill/dump valve (M) to vest adapter (K) of hose assembly (J). Connect other end of hose assembly (J) to test set oxygen OUTLET (H).

CAUTION

Inflating the bladder to pressures that exceed 2.5 psig will damage the bladder. Any vest bladder subjected to pressure in excess of 2.5 psig must be removed from service.

NOTE

No adjustment of regulator (A) should be necessary during the filling process. Approximate fill time is 45 to 60 seconds.

2. Turn inlet pressure valve (F) to the ON position. Observe low pressure gage (G). Gage reading should be approximately 0.0 psig during filling, and slowly approach 1.0 psig as the vest becomes fully inflated.

3. Allow the pressure reading on low pressure gage (G) to stabilize. Pressure in the vest should indicate 1.0 $\pm$0.1 psig. Adjust pressure reading on low pressure gage (G) by turning pressure adjusting handle on regulator (A) as necessary to achieve 1.0 $\pm$0.1 psig.

NOTE

When test set inlet pressure valve (F) is turned to OFF position, a continuous pressure drop may occur. If leakage does occur, proceed to step 5. If leakage is not indicated, proceed to step 6.

4. Turn test set inlet pressure valve (F) to the OFF position.

5. If leakage is indicated on low pressure gage (G) after inlet pressure valve (F) is turned to OFF; perform Fill/Dump Valve Functional Check in accordance with paragraph 4-69. If fill/dump valve (M) passes functional check, proceed to paragraph 4-70 and perform Test Vest Bladder Only procedures.

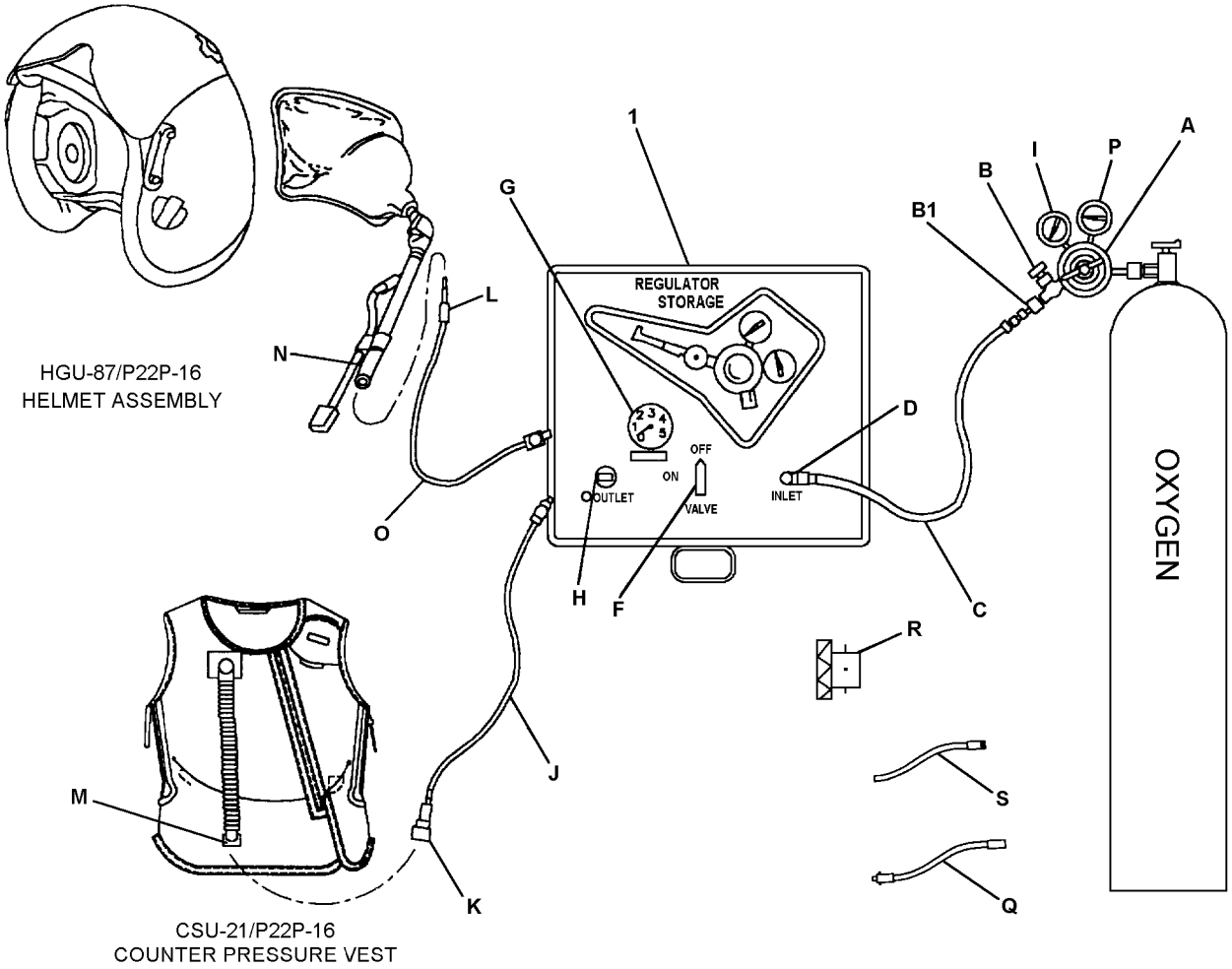

1	LEAKAGE TESTER TEST SET	J	HOSE ASSEMBLY (VEST)
A	REGULATOR	K	VEST ADAPTER (FITTING)
B	VALVE (OXYGEN FLOW CONTROL)	L	HELMET/VEST BLADDER ADAPTER (FITTING)
B1	QUICK DISCONNECT (FITTING)	M	VEST ASSEMBLY FILL/DUMP VALVE
C	HOSE, OXYGEN	N	HELMET BLADDER HOSE
D	OXYGEN INLET (QUICK DISCONNECT)	O	HOSE ASSEMBLY (HELMET BLADDER/VEST)
E	RELIEF VALVE (NOT SHOWN)	P	REGULATOR INLET GAGE
F	INLET PRESSURE VALVE	Q	ADAPTER CAP ASSEMBLY
G	LOWER PRESSURE (0 - 5 PSIG)	R	VEST ADAPTER CAP
H	OXYGEN OUTLET (QUICK CONNECT)	S	HOSE ASSEMBLY (HELMET BLADDER, INTERMEDIATE)
I	REGULATOR OUTLET GAGE		

4-6

Figure 4-7. Leakage Tester, TTU-551/E

6. If leakage is not apparent on gage (G), perform a time test of the test set low pressure gage (G) readings to determine leakage rate. Allowable leakage shall not exceed 0.1 psig in 30 seconds. If vest leakage does not exceed 0.1 psig, perform Fill/Dump Valve Functional Check in accordance with paragraph 4-69. If leakage exceeds 0.1 psig in 30 seconds, perform step 5.

4-69. Fill/Dump Valve Functional Check.

1. Ensure the pressure reading on gage (G) is approximately 1 psig. Turn test set inlet pressure valve (F) to the ON position and then to the OFF position if necessary to achieve this pressure.

NOTE

A properly operating fill/dump valve (M) will initially vent vest pressure in 3 to 5 seconds when vest adapter (K) is disconnected from fill/dump valve (M).

2. Disconnect vest adapter (K) from fill/dump valve (M).

NOTE

If fill/dump valve (M) does not vent vest in 3 to 5 seconds or is slow to vent, replace fill/dump valve (M) in accordance with paragraph 4-84 and retest in accordance with paragraphs 4-69 and 4-70.

3. Slightly press down on vest and remove approximately 1/2 of remaining oxygen from vest bladder.

CAUTION

It is essential that individuals be able to attain a proper seal of the fill port prior to performing steps 4 and 5.

NOTE

When performing steps 4 and 5, individuals with small thumbs may use the palm of their hand to seal the inlet port.

4. Place thumb over fill port (see illustration after step 5). Press down on vest. Vest should not deflate at this time. If vest deflates, repeat steps 1 through 4 until proper seal can be achieved and vest does not deflate.

5. With thumb still over fill port, continue pressing on vest. Quickly remove and replace thumb over fill port. The vest should continue to deflate through the dump ports. If vest does not continue to deflate after thumb is replaced, then the fill/dump valve (M) has malfunctioned and should be replaced in accordance with paragraph 4-84 and retested in accordance with paragraphs 4-68 and 4-69.

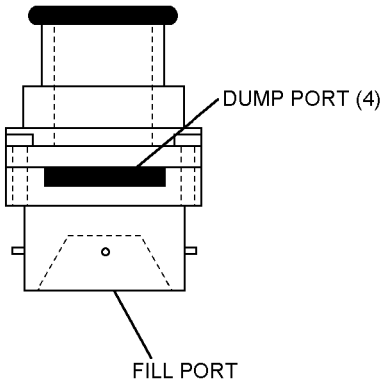

4p65s4

Steps 4 and 5 - Para 4-69

6. Provided there will be no more tests conducted on equipment requiring the TTU-551/E, the test stand will be secured in accordance with paragraph 4-71. Otherwise, return to paragraph 4-68 to perform additional vest tests.

4-70. Test Vest Bladder Only.

1. Disconnect vest fill/dump valve (M) from vest adapter (K).

2. Disconnect hose assembly (J) from oxygen OUTLET (H).

CAUTION

Cut through head of cable tie using diagonal cut pliers. Do not attempt to cut strap underneath head.

3. Carefully cut nylon cable tie securing vest fill/dump valve (M) and remove the fill/dump valve (M).

4. Insert helmet/vest bladder adapter fitting (L) into vest bladder hose (O). Connect other end of hose assembly (O) to test set oxygen OUTLET (H).

CAUTION

Inflating the bladder to pressures that exceed 2.5 psig will damage the bladder. Any vest bladder subjected to pressure in excess of 2.5 psig must be removed from service.

NOTE

No adjustment of regulator (A) should be necessary during the filling process.

5. Turn test set inlet pressure valve (F) to ON position. Observe low pressure gage (G). Gage reading should be approximately 0.0 psig during filling, and slowly approach 1.0 psig as the vest becomes fully inflated.

6. Allow the pressure reading on low pressure gage (G) to stabilize. Pressure in the vest should indicate 1.0 ±0.1 psig. Adjust pressure reading on low pressure gage (G) by turning pressure adjusting handle on regulator (A) as necessary to achieve 1.0 ±0.1 psig.

7. Turn test set inlet pressure valve (F) to the OFF position.

8. Time low pressure gage (G) reading for 30 seconds. Leakage shall not exceed 0.1 psig in 30 seconds. If vest bladder leakage exceeds allowable limits, install a new vest hose in accordance with paragraph 4-81 and repeat steps 5 thru 8. If leakage is within limits, proceed to step 9. If leakage exceeds allowable limits with new vest hose, the new hose shall be removed and the vest disposed of in accordance with the SM&R code.

9. Disconnect vest hose from helmet/vest adapter (L). Disconnect hose assembly (O) from oxygen OUTLET (H).

10. Re-install the original fill/dump valve (M) on the vest hose with a new cable tie with tension set to 3.

11. Provided there will be no more tests conducted on equipment requiring the TTU-551/E, the test stand will be secured in accordance with paragraph 4-71. Otherwise, connect hose assembly (J) to oxygen OUTLET (H) and return to paragraph 4-68 to perform additional vest tests.

4-71. SECURING TTU-551/E TEST SET.

1. Disconnect vest hose assembly (J) from test set oxygen OUTLET (H).

2. Close oxygen supply cylinder.

3. Turn test set inlet pressure valve (F) to the ON position, to bleed pressure from test set.

4. Turn regulator (A) counter-clockwise until spring tension is released.

5. Close oxygen flow control valve (B) and turn inlet pressure valve (F) to the OFF position.

6. Disconnect all hoses from test set and regulator (A) and stow in lid of test set.

7. Disconnect regulator (A) from oxygen supply cylinder and stow in space provided in test set.

8. Stow all hoses and adapter fittings/caps in space provided in test set.

4-72. REPAIR/REPLACEMENT.

4-73. Only the fabric portions of the CSU-21/P22P-16 Counter Pressure Vest shall be repaired. Repair of the bladder is not authorized. Garments having leaking or otherwise defective bladders shall be condemned. Procedures for repair or replacement of components of the CSU-21/P22P-16 Counter Pressure Vest are as follows:

Materials Required

Quantity	Description	Reference Number
As Required	Thread, Aramid Type II, Size E	MIL-T-43636 NIIN 00-512-1103
	-or-	-or-
	Type I, Size E Sage Green	NIIN 00-494-9901
As Required	Cloth, Duck Type III, Class 3	MIL-C-7219 NIIN 01-173-4436

Materials Required (Cont)

Quantity	Description	Reference Number
As Required	Slide Fastener Type IV, Style 8	A-A-55634
As Required	Fastener Tape, Hook, Type I, Class 1, 1 Inch US Army 106	MIL-F-21840 NIIN 00-151-6480
As Required	Fastener Tape, Pile, Class 2, 1 Inch US Army 106	MIL-F-21840 NIIN 00-151-6484
As Required	Cord, Polyamide High Temp. Resistant (Sage Green)	MIL-C-83242 NIIN 01-218-8409
As Required	Cord, Type I	MIL-C-81104 NIIN 01-013-4086
As Required	Stop, Top	P100000K NIIN 01-201-3524
As Required	Hose, Non-Metallic, Vest Assembly	F148-1231-1 G002-1101-01 NIIN 01-317-4439
As Required	Beeswax	NIIN 00-253-1171
As Required	Paraffin	NIIN 00-285-2041

4-74. REPAIR OF FABRIC NOT OVER BLADDER AREA. Repair of holes, tears, snags, worn areas, and missing or broken stitching in basic fabric, not over the bladder, shall be repaired as follows:

NOTE

All seams shall be restitched in original position minimum.

1. Open seams or broken stitching shall be sewn using non-melting thread. Stitches shall be Type 301, 8 to 10 stitches per inch. Backstitch or overstitch 3/4 inch.

2. Small holes/worn areas, tears or snags up to 7/8 inch shall be darned with reinforcing patch on underside. Use a circular darn for holes or snags and up-and-down or zigzag darn for straight tears, 14 to 16 stitches per inch. Backstitch or overstitch 1/2 inch.

3. Holes, worn areas, tears, or snags greater than 7/8 inch but less than 3 inches shall be patched. Patches shall not exceed three per garment.

a. With all edges of the patch turned under 1/4 inch, patch shall extend 3/4 inch beyond perimeter of damaged area on underside of garment.

b. Stitch patch to garment with a row of stitches 1/8 inch from edge of patch.

c. On outside of garment, turn under damaged edges of garment approximately 1/4 inch and stitch to patch 1/8 inch from edge of fold. Use 10 to 12 stitches per inch with 1/2 inch backstitch or overstitch.

WARNING

Repair of material or stitching directly over the bladder is not authorized.

4-75. REPAIR OF FABRIC/STITCHING OVER BLADDER AREA. There shall be no repair of the bladder. Garments that have leaks or defective bladders shall be condemned.

4-76. REPAIR OF SLIDE FASTENER. Repair is limited to replacement of slide fastener stops and slider assembly.

4-77. LACING REPAIR. Frayed or otherwise worn or weakened lacing shall be replaced. Ends of adjustment lacing shall be seared or dipped in hot solution of 50 percent bees wax and 50 percent paraffin to prevent fraying. Lacing loops shall be repaired as follows:

NOTE

Each lacing loop tape shall be restricted to a one-time only repair of the original upper and lower end loops. Garment shall be condemned upon subsequent failure of end loops.

1. Trim frayed end of broken or separated end lacing loop.

2. Stitch or bar tack loop cord where loop cord and tape join between the defective and adjacent loop.

3. Stitch with minimum of 6 rows of stitching, 10 to 12 stitches per inch.

4-78. REPLACEMENT OF GARMENT BINDING TAPE. Loose or frayed binding tape on garments shall be replaced as follows:

1. Edge binding shall be 45 degrees bias cut 1 1/4-inches to 1 3/8-inches wide and center folded.

2. Stitching shall be Type 301, 8 to 10 stitches per inch. Backstitch or overstitch 3/4 inch.

4-79. REPLACEMENT OF DAMAGED HOOK AND PILE FASTENERS. Cut new fastener tape same dimension as damaged tape removed and box stitch in place in original position.

4-80. REPLACEMENT OF STOWAGE LOOP. Refer to Figure 4-8 and proceed as follows:

Materials Required

Quantity	Description	Reference Number
As Required	Tape, Nylon Type VI, No. 1565 Sage Green	MIL-T-5038 NIIN 00-753-5952

CAUTION

Exercise care to prevent damage to bladder when opening stitching in vest seams.

1. Open inner neck seam at two points where stowage loop is installed and remove stowage loop.

2. Fabricate and install replacement stowage loop as follows:

a. Cut a 5 1/4-inch length of nylon tape and seal ends by searing or dipping in hot paraffin wax.

b. Make 90 degree fold at ends of tape to form 5/8-inch attachment tab.

c. Stitch each folded end with two rows of straight stitching, 18 stitches per inch, and backstitch over stitching.

d. Insert ends of loop tabs into seam openings.

CAUTION

Exercise care to prevent damage to bladder when stitching seams to secure stowage loop.

e. Secure tabs by stitching openings in seams closed. Use three rows of straight stitches, 8 to 10 stitches per inch.

4-81. REPLACEMENT OF VEST SUPPLY HOSE ASSEMBLY. Replace vest supply hose as follows:

4-82. Removal.

CAUTION

Use diagonal cut pliers to cut through top of tiedown strap head. Do not cut under strap head.

1. Using diagonal cut pliers remove tiedown strap securing vest supply hose to elbow adapter and remove hose from adapter.

2. Remove tiedown strap securing vest supply hose to vest valve using diagonal cut pliers in same manner.

4-83. Installation.

1. Install vest valve assembly on vest supply hose using tiedown strap using tensioning tool set at 8.

2. Slip vest supply hose on to elbow adapter and secure with tiedown strap using tensioning tool set at 8.

3. Perform leak test in accordance with paragraph 4-64.

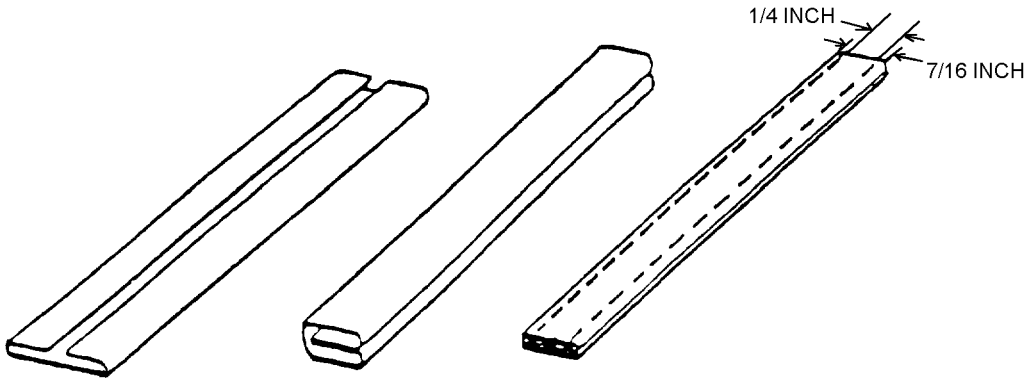

FABRICATING STOWAGE LOOP

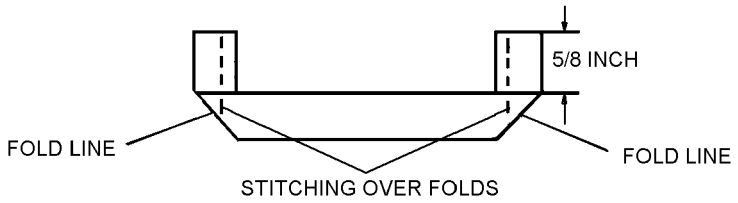

FOLDING/STITCHING STOWAGE LOOP

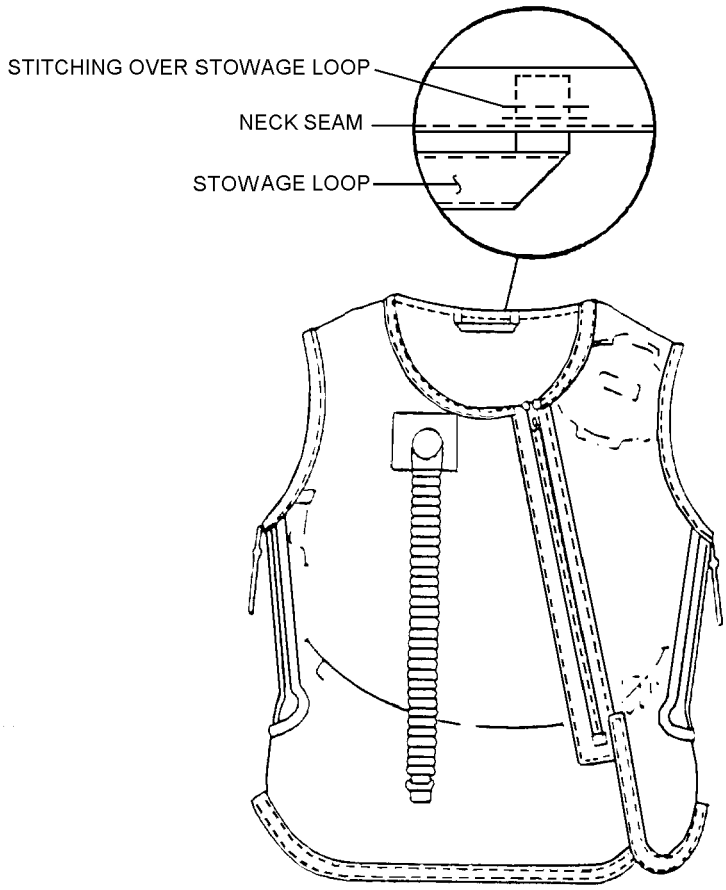

4-7

Figure 4-8. Fabrication/Installation of Stowage Loop

4-84. REPLACEMENT OF VEST VALVE ASSEMBLY.

4-85. Removal.

CAUTION

Use diagonal cut pliers to cut through top of tiedown strap head. Do not cut under strap head.

1. Remove tiedown strap securing vest supply hose vest valve assembly using diagonal cut pliers and remove hose from valve.

4-86. Installation.

1. Install vest supply hose on vest valve assembly with tiedown strap using tensioning tool set at 8.

2. Perform leak test in accordance with paragraph 4-64.

4-87. CLEANING.

4-88. Cleaning garment shall be performed at lowest level of maintenance possible as follows:

Materials Required

Quantity	Description	Reference Number
As Required	Detergent, Laundry	Commercial

CAUTION

Do not allow water to enter bladder.

Do not dry clean counter pressure vest.

Do not use bleaches or other additives.

Do not use commercial laundry facilities.

CAUTION

Do not wash garment in hot water.

1. Seal vest valve assembly. Close all slide fasteners and hook and pile tape.

CAUTION

Securely pad vest valve assembly with rag or suitable material to prevent damage to fittings or washer/dryer.

Do not wash vest in hot water.

2. Hand launder or use automatic washer with delicate cycle. Ensure cold water is used. Follow detergent manufacturers recommendation for amount of detergent to use. Wash cycle shall not exceed 3 minutes.

CAUTION

Do not wring garment. Do not damage bladder or hose.

3. Rinse in cool, fresh water. Drain water and repeat rinse until all trace of detergent has disappeared from rinse water.

CAUTION

Do not iron or press.

NOTE

Garment may be dried in a clothes dryer using fluff cycle, no heat, for 20 minutes.

4. Hang garment on wooden hanger in a dry, well ventilated area until thoroughly dry, or machine fluff dry.

5. If slide fasteners do not function properly after laundering, a dressing such as paraffin or candle wax may be applied to fastener chain. Do not use oil or grease.

Section 4-5. CSU-20/P22P-16 Anti-g Garment

4-89. GENERAL.

4-90. The CSU-20/P22P-16 Anti-g Garment (Figure 4-9) is a component of the Navy Combat Edge (NCE) A/P22P-16 Aircrew Protective Assembly. The CSU-20/P22P-16 anti-g garment provides 40% greater bladder coverage to restrict the flow of blood to the lower portion of the body than either the CSU-13B/P or CSU-15/P anti-g garments.

4-91. CONFIGURATION.

4-92. The CSU-20/P22P-16 has a flame resistant cloth outer shell which houses a bladder. It is cut away at the groin and knees. The outer shell has waist and inner-leg slide fasteners, adjustment lacing with covers, and leg pockets with slide fastener closures. The lower garment bladder inflates automatically to a pressure determined by the automatic anti-g suit pressure regulating valve installed aboard the aircraft. A g-sensing line located between the oxygen regulator and the male portion of the g-suit hose quick connect provides the pneumatic signal to the regulator that enables the NCE system to operate. The bladder, when inflated, restricts the downward flow of blood to the waist and feet, thereby lessening the effect of blood pooling. When using the CSU-20/P22P-16 anti-g garment as a stand alone piece of equipment the g-sensing line is not used. Do not remove the g-sensing line but ensure it is firmly secured in its channel on the g-suit hose.

4-93. APPLICATION.

4-94. The CSU-20/P22P-16 Anti-g Garment is a component of the Navy Combat Edge (NCE) System and is designed to be used only by aircrew personnel assigned to high performance aircraft with the proper automatic anti-g suit valve installed. Except for F/A-18 series aircraft, the CSU-20/P22P anti-g garment cannot be used as an alternative in place of the CSU-15 series and the CSU-13 series anti-g garments, unless specifically authorized by NAVAIR 4.0P interim flight clearance.

4-95. MODIFICATIONS.

4-96. There are currently no modifications authorized for the CSU-20/P22P-16 Anti-g Garment. See Table 4-9.

4-97. FITTING.

4-98. The CSU-20/P22P-16 Anti-g Garment is fitted and adjusted to aircrew personnel on a best fit basis. Use Table 4-10 as a guide for selection of initial fit. The anti-g garment should be fitted over the summer flyer's coverall. Some readjustment in size selection may be required to accommodate bulkier anti-exposure assemblies. The overall fit should be snug, not tight, due to the large volume of inflated bladders. The anti-g garment is fitted as follows:

1. Loosen all laces on garment but do not remove laces from eyelets. Open all thigh comfort slide fasteners.

2. Have aircrewmember don CSU-21/P22P-16 Counter Pressure Vest fitted in accordance with paragraph 4-53.

3. Have aircrewmember don CSU-20/P22P-16 Anti-g Garment and close waist slide fastener. The top edge of the anti-g garment should be just below bottom of wearer's rib cage. The hem of the counter pressure vest must overlap the top (waist line) of anti-g garment.

4. After donning anti-g garment, manually work out wrinkles of the flight suit to reduce discomfort.

CAUTION

Failure to evenly distribute the tightness among the four waist lacing assemblies can lead to premature failure of the garment.

NOTE

Laces are threaded beginning in the middle and lacing toward the top and bottom of the lacing eyelets.

5. Beginning with the top portion of each waist lacing assembly, tighten lacing cords, ensuring they are securely and equally tightened.

6. Continue with lower portion of each waist lacing assembly adjusting side and back lacings as necessary to obtain snug, but comfortable fit. Do not lace so tight as to restrict normal breathing or compress aircrew members abdomen. When properly adjusted, one should be able to slip the open hand between the waist section and the aircrewmember's abdomen.

Table 4-9. CSU-20/P22P-16 Anti-g Garment Directives

Description of Modification	Application	Modification Code
None	None	None

Table 4-10. CSU-20/P22P-16 Anti-g Garment Sizing Chart

Garment Size	Height (inches)	Weight (pounds)	P/N
Small Regular	64 - 68	129 - 156	MSF8403
Small Long	68 - 73	129 - 156	MSF8402
Medium Regular	64 - 70	157 - 184	MSF8403
Medium Long	70 - 74	157 - 184	MSF8404
Large Regular	66 - 71	185 - 209.5	MSF8405
Large Long	71 - 76	185 - 209.5	MSF8406
Large Extra Long	75 - 79	191 - 230	MSF8407

NOTE

Distribute tightness approximately equally among the four waist lacing assemblies. Lacing may need to be looser at the ends to achieve comfortable fit across the hips.

7. When lacing adjustment is completed tie ends of lacing in a double half-hitch knot.

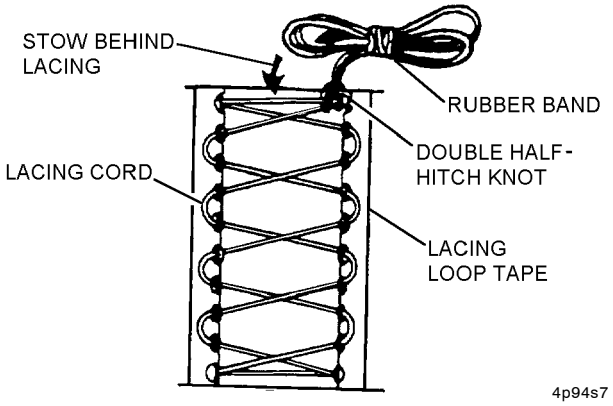

Step 7 - Para 4-98

NOTE

Do not cut off unused (excess) lacing.

8. Fake excess lacing, secure with lightweight rubber band and stow behind tightened laces.

9. Position the knee hole openings so wearer's kneecaps are centered. Have aircrew member close leg slide fasteners. Close thigh slide fasteners. Close slide fastener covers.

NOTE

The thigh comfort slide fasteners shall be closed during fitting and when in the aircraft. However, they may be left open for comfort during pre/post flight.

10. Tighten thigh and calf laces, ensuring that knees stay centered in knee holes and garment extends down to boot tops.

11. Have aircrewmember sit in normal sitting position, then check to ensure top of waist bladder does not extend above the lowest rib. If it does, and cannot be corrected by readjustment of the waist, a smaller size garment may be required.

NOTE

Fitting g-suit on small stature aircrewmember requires careful attention to position of abdominal and calf bladders. The abdominal bladder must be below the rib cage. The top of the calf bladder must be positioned at the knee crease on the back of the leg. Alterations of the CSU-20/P22P-16 is authorized. See paragraph 4-22.

12. Have aircrewmember stand and lift leg onto a platform (arm of a chair or something of similar height - approximately 25 inches) and check mobility. If the garment is too tight to permit this movement, adjust the lacings, or try a larger garment size.

13. Tie lacing ends in double half-hitch knot when completed (as in step 7 above).

NOTE

Do not cut off unused (excess) lacing.

14. Fake excess lacing, secure with lightweight rubber band and stow behind tightened laces.

NOTE

The fit of the new anti-g suit should be checked after each of the first few sorties. Some lacing may require readjustment due to initial fabric and lacing stretch.

If an acceptable fit cannot be achieved, or if any concerns regarding fitting arise, notify your Failsafe Tiger Team Representative.

15. Because of the large size incorporated inside the CWU-20/P g-suit securing loops have been added to help secure the lacing cover over the adjustment lacings. Using excess lacing (recommended) or type I nylon cord secure the lacing cover to the g-suit by tying the loop on cover to the matching loop on the g-suit with a square knot.

4-99. CSU-20/P22P-16 ANTI-g HOSE. No modification to shorten or lengthen hose is authorized.

4-100. MAINTENANCE.

4-101. Aircrewmember responsibility for maintenance of the anti-g garment is limited to Preflight/Postflight Inspections. Defects in a bladder system shall be considered cause for replacing entire garment. Required maintenance actions shall be performed by qualified Aircrew Survival Equipment personnel. Authorized repairs are listed in Table 4-11. All maintenance actions shall be documented in accordance with COMNAVAIRFORINST 4790.2.

4-102. INSPECTION.

4-103. Inspection requirements of the CSU-20/P22P-16 Anti-g Garment shall consist of Place-In-Service Inspection, Preflight/Postflight Inspection, and Special Inspection (90 and 360-Day). Any discrepancies noted shall be reported to the Aviation Equipment Branch for maintenance action. Inspections shall be recorded as required by COMNAVAIRFORINST 4790.2.

4-104. PLACE-IN-SERVICE INSPECTION. Prior to being placed into service the anti-g garment shall receive a Visual Inspection in accordance with paragraph 4-108 and a leak check in accordance with paragraph 4-109.

4-105. PREFLIGHT/POSTFLIGHT INSPECTION. The Preflight/Postflight Inspection shall be performed prior to and after each flight by the aircrew member to whom the anti-g garment is assigned. The Preflight/Postflight Inspection shall be a Visual Inspection in accordance with paragraph 4-108.

4-106. SPECIAL INSPECTION (90-DAY). A Special Inspection shall be performed by an Aircrew Survival Equipmentman every 90 days and whenever a discrepancy is noted during a Preflight/Postflight Inspection. The 90-Day Special Inspection shall consist of the following:

Table 4-11. Repairs/Fabrications/Replacements

Description	Paragraph
Fitting Anti-g Hose and/or Clamp Replacement	4-99
Repair Small Holes, Tears, Snags in Basic Fabric	4-114
Bladder Cover Repair	4-116
Slide Fastener Replacement	4-118
Hook and Pile Fastener Replacement	4-117
Lacing Cord Replacement	4-119
Lacing Covers Replacement	4-120
Sliders, Top Stops on Slide Fastener Replacement	4-121
Anti-g Hose Connector Replacement	4-122
g-Sense Line	4-125

1. Perform Visual Inspection in accordance with paragraph 4-108.

2. If discrepancies have been corrected, a leak test shall be conducted in accordance with paragraph 4-109.

3. Document inspection in accordance with COMNAVAIRFORINST 4790.2.

4-107. SPECIAL INSPECTION (360-DAY). The 360-Day Special Inspection shall consist of the following:

1. Perform all steps in accordance with paragraph 4-106.

2. Perform a leak test in accordance with paragraph 4-109.

3. Document inspection in accordance with COMNAVAIRFORINST 4790.2.

4-108. VISUAL INSPECTION. The Visual Inspection of the anti-g garment shall satisfy the following:

1. Secure attachment and locking, unimpeded operation, and absence of corrosion on all slide fasteners.

2. No loose or broken stitching.

3. Hook/bar fasteners for wear, security and corrosion.

4. No holes, tears, abrasions or otherwise weak areas of inner or outer fabric located directly over bladders, including hose bladder.

5. No nicks, corrosion or impeded operation of quick disconnect connectors.

6. If required, clean assembly components in accordance with paragraph 4-128.

7. If discrepancies are noted, inform Aircrew Survival Equipmentman for action.

4-109. LEAK TEST OF CSU-20/P22P-16 ANTI-g GARMENT. The leak test shall be performed using test fixture described in Section 4-3. Leak test is performed as folllows:

1. Close leak test fixture valve and attach quick disconnect fitting on garment hose to female fitting on leak test fixture.

2. Rotate three-way valve to air source and inflate bladder to 3 psig. Rotate to measuring device to check pressure.

3. The bladder pressure shall not drop more than 1.0 psig in the first 60 seconds. A pressure drop greater than 1.0 psig in 60 seconds constitutes test failure.

NOTE

When the leak test fixture is removed from the garment, the bladder may deflate. This is normal. The quick disconnect fitting on the garment hose is equipped with an emergency pressure valve. This allows deflation of the bladder to 1.5 psig within 4 seconds upon disconnect from the air source. The garment will then maintain internal pressure.

If feasible, failed units should be returned for analysis to:

Crew Systems Department
Naval Air Warfare Center Aircraft Division,
Code 4.6.3, Bldg 2187,
48110 Shaw Road
Patuxent River, MD 20670-1906

4. Remove leak test fixture and deflate garment bladder. Garments failing leak test shall be replaced.

4-110. SERVICE LIFE.

4-111. The CSU-20/P22P-16 Anti-g Garment shall remain in service until it fails leak test, requires more than three patches, develops growing holes or tears in fabric over the bladder, and/or can no longer be economically repaired.

4-112. REPAIR.

4-113. Repairs shall be performed by the lowest maintenance level possible. Damage which cannot be corrected by repairs listed in Table 4-11 shall be cause for replacement of the garment.

4-114. SMALL HOLES, TEARS, SNAGS, AND MISSING OR BROKEN STITCHING IN BASIC FABRIC. Repair of damage within repair specification shall be as follows:

Materials Required

Quantity	Description	Reference Number
As Required	Thread, Aramid Size E, Sage Green	MIL-T-43636 NIIN 00-496-9901 or NIIN 00-512-1103
	-or-	-or-
As Required	Thread, Nylon, Size E, Sage Green	V-T-295 NIIN 00-204-3884
As Required	Cloth, Type II, Fire-Resistant	MIL-C-83429 NIIN 01-147-2064 (Note 1)

Notes: 1. NIIN 01-147-2064 has been discontinued without replacement in the supply system. NAVAIR Clothing Team has plentiful supply on hand and can distribute in 5 yard increments to any fleet activities who need it. Please contact member of the Personal Protective Clothing Team to request material. Team Members are listed on the PMA202 website.

WARNING

Repair of material or stitching or replacement of components directly over the bladder is not authorized.

CAUTION

When opening seams to damage areas exercise care not to damage bladder system. All seams shall be restitched in original positions.

NOTE

All stitching shall be in accordance with Type 301, Lockstitch, 8 to 10 stitches per inch with 3/4 inch minimum overstitch or backstitch unless otherwise specified.

1. Open seams or broken stitching shall be resewn.

2. Small holes, tears, or snags up to 7/8 inch shall be darned with a reinforcing patch on the underside. Reinforcing patch shall be of same basic cloth as garment. Use a circular scan for holes or snags and up-and-down or zig-zag darn for straight tears.

3. Holes or tears in excess of 7/8 inch and not exceeding 3 inches shall be patched with all edges of the patch turned inside 1/4 inch. The patch shall extend 3/4 inch beyond damaged area on the underside of the garment. Stitch in place to garment with stitching 1/8 inch from edge of patch. On outer side of garment, turn all damaged edges under approximately 1/4 inch and stitch in place 1/8 inch from folded edge.

NOTE

Number of patches shall not exceed three per garment.

4-115. Any damage or fraying detected in the metal stay areas shall be repaired or reinforced. As a preventive maintenance measure, the garment may be reinforced in the metal stay areas before any damage occurs.

WARNING

Repair of material or stitching or replacement of components directly over the bladder is not authorized.

4-116. REPAIR OF BLADDER/BLADDER COVERING. There shall be no repair of the bladder. Garments that have leaks or defective bladders shall be condemned.

4-117. REPLACEMENT OF HOOK AND PILE TAPE. Damaged hook and pile tape shall be replaced with tapes conforming to Type I, Class 1, MIL-F-21840. Color class 1 shall approximately match color of basic fabric (Table 4-12).

4-118. REPLACEMENT OF SLIDE FASTENERS. Broken or inoperative slide fasteners shall be replaced in the same manner as originally installed. Replacement slide fasteners shall be same type and manufacture or same type standard issue cut to required length (Table 4-13).

4-119. REPLACEMENT OF LACING CORD. Determine required cord length and refer to paragraph 4-33 for installation procedures.

4-120. REPLACEMENT OF LACING COVER HOOK AND PILE TAPE. See Table 4-12 for proper length and refer to paragraph 4-34 for installation procedures.

Table 4-12. Lacing Cover Hook and Pile Fastener Lengths (Inches)

G-Suit Size	Sideseams (inches)	Left or Right (inches)	Thigh (inches)	Calf (inches)
Small regular	11	8 1/2	10 3/4	9
Small long	11	8 1/2	11 1/2	10
Medium regular	11	8 1/2	11 1/2	9 3/4
Medium long	11	8 1/2	11 1/2	10 3/4
Large regular	11	8 1/2	11 1/2	10 3/4
Large long	11	8 1/2	12 1/4	11 1/2
Large extra long	11	8 1/2	12 1/4	12 3/4

Notes: Pile Fastener lengths:
1. Pile tape for dart and side seam covers should be cut 5/8 inch longer than hook fastener tape lengths.
2. Pile tape for thigh and calf covers shall be cut to fit garments.

Table 4-13. Slide Fastener Lengths

Suit Size	Location	NIIN No.	Type	Style	Size	Length (Inches)
All sizes	Waist closure	5325-00-170-2999	IV	7	MHS	8 1/2
All sizes	Pockets	5325-00-164-9752	I	7	MS	8
Small regular	Waist comfort slide fasteners cannot be replaced due to the close distance to the bladder.					
	L/H Leg opening	5325-00-935-5977	IV	7A	MHS	26
	R/H Leg opening	5325-00-186-6237	IV	8A	MHS	26
Small long	L/H Leg opening	5325-00-164-0814	IV	7A	MHS	27 1/2
	R/H Leg opening	5325-00-164-9984	IV	8A	MHS	27 1/2
Medium regular	L/H Leg opening	5325-00-935-5978	IV	7A	MHS	27 1/2
	R/H Leg opening	5325-00-164-9971	IV	8A	MHS	27 1/2
Medium long	L/H Leg opening	5325-00-935-5981	IV	7A	MHS	29
	R/H Leg opening	5325-00-164-9984	IV	8A	MHS	29
Large regular	L/H Leg opening	5325-00-935-5979	IV	7A	MHS	29
	R/H Leg opening	5325-00-164-0826	IV	8A	MHS	29
Large long	L/H Leg opening	5325-00-164-9913	IV	7A	MHS	30 1/2
	R/H Leg opening	5325-00-164-9772	IV	8A	MHS	30 1/2
Large X-long	L/H Leg opening	5325-01-471-3280	IV	7A	MHS	32
	R/H Leg opening	5325-01-471-3282	IV	8A	MHS	32

Table 4-13. Slide Fastener Lengths (Cont)

Suit Size	Location	NIIN No.	Type	Style	Size	Length (Inches)
SL/ML/LL/LXL	Comfort Zipper	5325-00-164-0827	I	3	MS	12 1/2
MR/LR	Comfort Zipper	5325-00-164-0827	I	3	MS	12

Notes:
1. Activities having problems ordering fasteners via the supply system can open purchase the zippers directly from the manufacturer (YKK, an approved government source) by calling Diversified Marketing Group at (610) 667-5589. They will ask you for the NIIN and build an approved fastener based on the specifications belonging to that NIIN.
2. This table reflects Federal Specifications V-F-106F (e.g. Type and Style) even though the standard was superseded by Commercial Item Description (CID) A-A-55634 in March of 1998. Below you will find the basic specifications for the fasteners needed in the G-Suit so as to make future purchases easier. Please note that both the V-F-106F and the A-A-55634 standards are listed (Notes 4 and 5).
3. All slide fasteners are Size Medium Heavy Special (MHS) or Medium Special (MS) and slide in an upward direction.
4. Specs for the V-F-106 Standard Waist and Leg Opening Fasteners are as follows: The R/H Fastener is a Type IV, Style 7, Separating, Non-reversable fastener with an automatic lock, open top stop, closed bottom stop, right hand separating unit, single slider arrangement. The L/H Fastener is identical to the R/H Fastener except that the Style is 8 on the L/H Fastener. The Waist Fasteners are identical to the R/H Fastener.
5. Specs for the A-A-55634 Waist and Leg Opening Fasteners are as follows: The R/H Fastener is a Type III, Style 7A, Separating, Non-reversable fastener with an automatic lock, open top stop, closed bottom stop, right hand separating unit, single slider arrangement. The L/H Fastener is identical to the R/H Fastener except the Style is 8A on the L/H Fastener. Waist Fasteners are identical to the R/H Fastener.

4-121. REPLACEMENT OF SLIDERS AND TOP STOPS ON CLOSURE SLIDE FASTENERS. See Table 4-13 for slide fastener lengths and refer to paragraph 4-35 for installation procedures.

4-122. REPLACEMENT OF ANTI-g HOSE CONNECTOR.

Materials Required

Quantity	Description	Reference Number
As Required	Tape, Insulation Electrical, Pressure Sensitive, 3/4-Inch Wide, Black	MIL-I-24391 NIIN 01-189-6927 -or- NIIN 00-419-4291
As Required	Insulation, Sleeve Heat Shrinkable Polyolefin, Flexible	MIL-I-23053/5A NIIN 00-990-9911
1	Connector	NIIN 01-439-1334
1	Clamp, Hose	NIIN 00-585-8621 or equivalent

4-123. Removal.

1. Remove heat shrinkable tubing from connector.

CAUTION

Cut through the top of tiedown strap head using diagonal cut pliers. Do not cut underneath head.

2. Using diagonal cut pliers, cut and remove tiedown straps from sense line and remove sense line from connector port.

3. Remove additional layers of heat shrinkable tubing, clamps and electrical tape.

4. Remove and retain rubber sleeve from connector.

4-124. Installation.

1. Extend bladder extension on flat surface.

2. Bladder extension tube and bladder extension covering should be the same length.

3. Cut bladder spacer fabric back 5/8 inch from end.

4. Install three inch piece of rubber sleeve on connector so that it is flush with shoulder.

NOTE

When installing the connector it is necessary that the sense line port located on the connector is in direct line with the center of the channel provided on the anti-g hose.

5. Locate the bladder spacer material over the rubber sleeve such that it extends slightly over the connector hose barb but not under the inner leg of the clamp.

6. Wrap 2 1/2 turns of tape centering over the connector hose barb. Tape should overlap spacer material and rubber sleeve and be located under both legs of the clamp. Tape should be taut when applying.

7. Install clamp centering over connector hose barb. Clamp tightly.

8. Wrap 2 1/2 turns of tape centering over the clamp.

9. Slide bladder extension tube on connector until it is flush with the shoulder.

10. Wrap 2 1/2 turns of tape over bladder extension adjacent to connector shoulder.

11. Slide bladder extension cover on connector until it is flush with the shoulder.

12. Wrap 2 1/2 turns of tape over bladder extension cover adjacent to connector shoulder.

13. Install clamp over the tape and adjacent to the connector shoulder so that it does not overlap the previously installed clamp.

14. Wrap 2 1/2 turns of tape centering over clamp.

15. Install 2-inches of heat shrinkable tubing over the connection such that it overlaps the connector body approximately the width of the rear flange. Direct heat at shrinkable tubing and do not over heat tubing.

16. Slide the 7-inch spring into the 8-inch sense line.

17. Route sense line through anti-g hose channel and connect sense line to sense line port on connector. Secure sense line to connector with two tiedown straps using tensioning tool set at 3.

18. Install sense line tap to sense line and secure with a tiedown strap using tensioning tool set at 3.

19. Install 2-inches of heat shrinkable tubing over the connection such that it overlaps the connector body approximately the width of the rear flange. Direct heat at shrinkable tubing and do not over heat tubing.

20. Ensure connector is sufficiently tightened by grasping hose and jerking sharply on fitting.

21. Leak test in accordance with paragraph 4-109.

4-125. g-SENSE LINE DISASSEMBLY AND INSTALLATION.

4-126. Disassembly.

CAUTION

Cut through tiedown strap head using diagonal cut pliers. Do not cut under strap head.

1. Disconnect the g-sense line from CRU-103/P regulator and the g-suit.

2. Remove quick disconnect from sense line and retain. Retain inner spring.

4-127. Installation.

1. Have the aircrewmember don the lower anti-g garment (CSU-20/P22P-16) and harness with the CRU-103/P regulator.

2. Install male sense line connector to sense line hose and secure with tiedown strap using tensioning tool set at 3.

3. Connect sense line male connector to the female connector at the bottom port of CRU-103/P regulator. Route the g-sense line hose across the abdomen bladder and through the torso harness, down the left leg until the hose is one to two inches past the sense line connector on the anti-g hose connector.

4. With the g-suit hose fully extended, mark and cut hose at that location. (Verify length.)

5. Install female sense line connector to the hose and secure with a tiedown strap, using tensioning tool set at 3.

6. Place the spring next to the hose and cut the spring one inch shorter than the hose. File down both ends of the spring assuring that there are no sharp ends.

7. Insert spring into hose, install male sense line connector and secure with a tiedown strap, using tensioning tool set at 3.

8. Connect the male end of the sense line to the female quick disconnect port of the CRU-103/P regulator.

4-128. CLEANING.

1. Refer to paragraph 4-87 for cleaning instructions.

Section 4-6. TTU-551/E Leakage Tester Preoperational Check

4-129. GENERAL.

4-130. The purpose of the preoperational check of the leak test equipment is to ensure the accuracy of critical leak tests performed on the CSU-21/P22P-16 Counter Pressure Vest and HGU-87/P22P-16 Helmet. Both items are components of the Navy Combat Edge A/P22P-16 Aircrew Protective System and are tested using the TTU-551/E Leakage Tester. (Refer to NAVAIR 17-15GB-505 for details regarding the TTU-551/E).

4-131. PREOPERATIONAL CHECK PROCEDURE.

4-132. The preoperational check of the Leakage Tester shall be performed daily, prior to testing the CSU-21/P22P-16 Vest or HGU-87/22P-16 Helmet Bladder. To perform Leakage Tester Preoperational Check, proceed as follows. If leakage is detected, forward the test set to AIMD ALSS division for repair.

NOTE

Index letters refer to Figure 4-7 unless otherwise noted. Tests are arranged so as to proceed from one test to another with minimal change in valve positioning or hose attachments.

1. Ensure test set inlet pressure valve (F) is in the OFF position and oxygen supply cylinder valve is fully closed.

2. Connect regulator (A) to the oxygen supply cylinder. Ensure regulator is not loaded by turning pressure adjusting handle counterclockwise until tension is released.

3. Ensure oxygen flow control valve (B) on regulator is closed.

4. Slowly open the oxygen supply cylinder valve. Relieve any pressure indicated on regulator gage (I) by opening and closing the oxygen flow control valve (B).

5. Connect oxygen hose (C) to quick disconnect fitting (B1) and connect the other end of oxygen hose (C) to test set oxygen INLET (D).

6. Connect helmet/vest bladder hose assembly (O) to test set oxygen OUTLET (H). Connect intermediate hose (S) to helmet/vest adapter (L) of hose assembly (O). Connect adapter cap assembly (Q) to intermediate hose (S).

7. Fully open the oxygen flow control valve (B) attached to regulator (A).

8. Slowly turn regulator (A) tee handle clockwise until 1.0 $\pm$0.1 psig is indicated on regulator outlet gage (I). Observe test set pressure gage (G) for 2 minutes. Any indication of pressure on test set pressure gage will determine if test set inlet pressure valve (F) is leaking.

WARNING

Prior to use, inspect leak detection compound. Compound which is not clear and free from suspended material/sediment is considered contaminated and shall be disposed of. Compound exhibiting peculiar odors such as acetone or alcohol is considered contaminated and shall be disposed of.

9. Using leak detection compound, check for leakage of oxygen hose (C) at test set oxygen INLET (D) and regulator connection (B1).

10. Slowly turn test set inlet pressure valve (F) to the ON position. Allow the pressure on test set pressure gage (G) to stabilize.

11. Turn test set inlet pressure valve (F) to the OFF position and observe test set pressure gage (G) for thirty seconds. Pressure on test set pressure gage shall remain constant; no leakage allowed.

12. Remove adapter cap assembly (Q) from intermediate hose assembly (S) to relieve pressure from the test set. Remove intermediate hose (S) from helmet/vest adapter fitting (L).

13. Disconnect helmet bladder/vest hose assembly (O) from oxygen OUTLET (H).

14. Connect vest hose assembly (J) to the oxygen OUTLET (H).

15. Connect adapter cap assembly (R) to vest adapter fitting (K) of vest hose assembly (J).

16. Turn test set inlet pressure valve (F) to the ON position. Using regulator (A), adjust pressure to 1.0 $\pm$0.1 psig as indicated on test set pressure gage (G).

17. Turn test set inlet pressure valve (F) to the OFF position and observe test set pressure gage (G) for 30 seconds. No leakage allowed.

18. Remove the adapter cap assembly (R) from vest adapter fitting (K) of vest hose assembly (J).

19. Remove vest hose assembly (J) from oxygen OUTLET (H).

20. Close oxygen supply cylinder and relieve pressure from test set by turning test set inlet pressure valve (F) to the ON position.

21. Turn regulator (A) pressure adjusting tee handle counter-clockwise until spring tension is relieved.

22. Close regulator oxygen flow control valve (B).

23. Turn test set inlet pressure valve (F) to the OFF position.

NOTE

Replace all dust caps when stowing equipment.

24. Disconnect oxygen hose assembly (C) from regulator (A) and oxygen INLET (D).

25. Disconnect regulator (A) from oxygen supply cylinder and stow in space provided in test set.

26. Stow all hoses and adapter fittings/caps in space provided in test set.

4-133. SPECIAL TOOLS.

4-134. Special equipment or tools peculiar to the support of Navy Combat Edge A/P22P-16 components are initially provided with TTU-551/E Leakage Tester. If an individual item of equipment or tool should become lost or broken, contact NAWCAD - Lakehurst (Code 4824) for interim support. Refer to Figure 4-9 for leak test fixture to be used to test CSU-20/P22P-16.

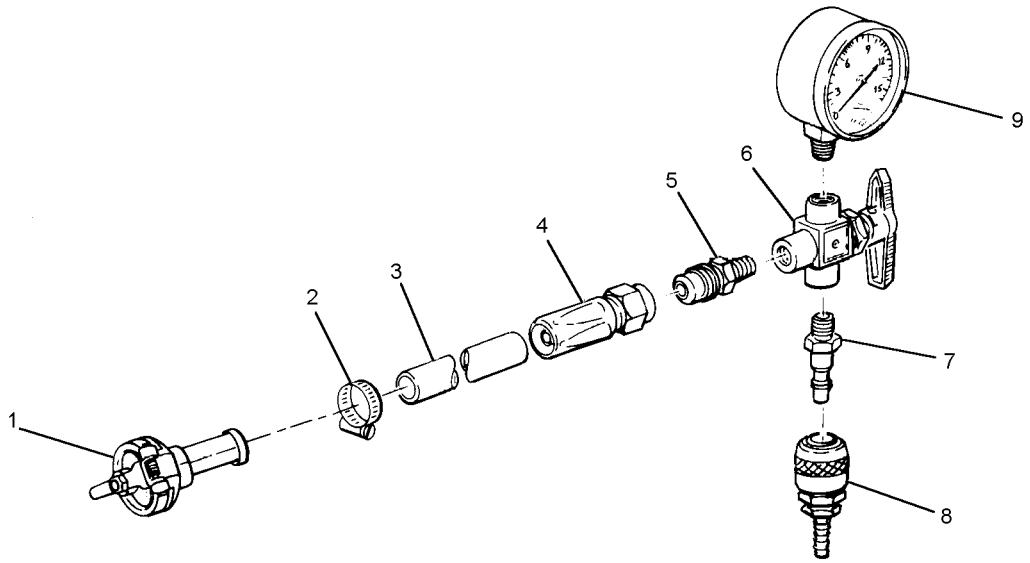

004008

Figure 4-9. Anti-g Suit Leak Test Fixture

Figure and Index Number	Part Number	Description 1 2 3 4 5 6 7	Units Per Assembly	Usable On Code
4-9	No Number	ANTI-g SUIT LEAKAGE TEST FIXTURE . . . . . (Note 4)	1	
-1	MS27755	. CONNECTOR, Hose, Quick-disconnect, ... Female, Anti-g suit	1	
-2	5415L	. CLAMP, Hose size 16 (39428)	A/R	
-3	No Number	. HOSE, Rubber, 1/2-inch ID, 3/4-inch OD	1	
-4	MS27404-8D	. FITTING, Hose	1	
-5	AN814-12-8D	. REDUCER, 3/4-inch tubing to 1/2-inch pipe	1	
-6	B43XVF4	. VALVE, 3-way with vent (12623)	1	
-7	MIL-C-4109	. COUPLING, Air hose (Male) (Note 1)	1	
-8	MIL-C-4109	. COUPLING, Air hose (Female) (Note 1)	1	
-9	GG-G-76	. GAGE, Pressure, 0 to 15 psig (Notes 2 and 3)	1	
	CC-TM-12	. MANOMETER, Mercury, Calibrated 0 to . . . . . 6 psig (75331) (Note 3)	1	
	Notes: 1. Select quick-disconnect coupling compatible with local low pressure air installation. 2. NSN: 6685-00-246-2363. 3. Select either a gage or manometer. 4. Use to test CSU-15/P, CSU-13B/P, and CSU-20/P22P-16 anti-g garment.			

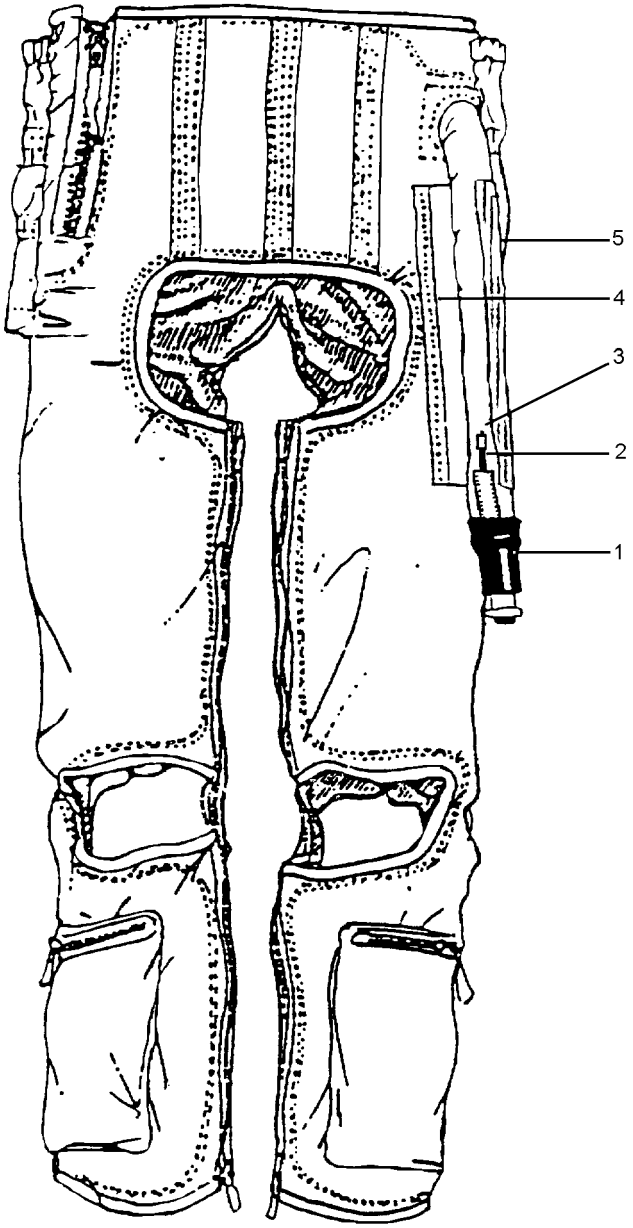

4-9

Figure 4-10. CSU-20/P22P-16 Enhanced Anti-g Garment Lower Ensemble

Figure and Index Number	Part Number	Description 1 2 3 4 5 6 7	Units Per Assembly	Usable On Code
4-10	TBD	CSU-20/P22P-16 ENHANCED ANTI-g . . . . . . GARMENT, Lower ensemble, (78673) (Gentex P/N 94D8957-1) NIIN 01-439-1330	REF	
-1	10225-01	. CONNECTOR, Anti-g hose, NIIN 01-439-1334 . . .	1	
-2	97C9830-1	. HOSE, Sense line, NIIN 01-439-1335	1	
	18976-01	. SPRING, Sense line (12 inches), ... NIIN 01-439-1336 (Not illustrated)	1	
-3	PMCD22-04	. CONNECTOR, Sense line, Male (62661), ... NIIN 01-353-6558	1	
-4	MIL-F-21840	. FASTENER TAPE, Hook, Type I, ... NIIN 00-935-6762	A/R	
-5	MIL-F-21840	. FASTENER TAPE, Pile, Type I, ... NIIN 00-926-4930	A/R	

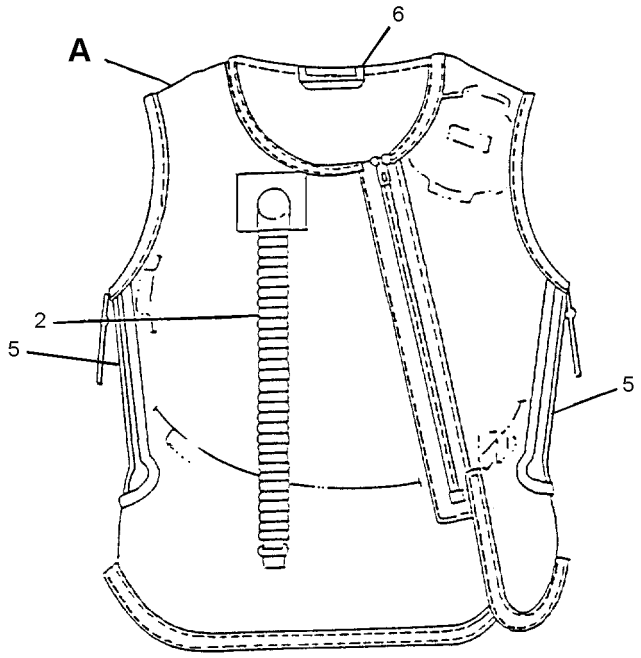

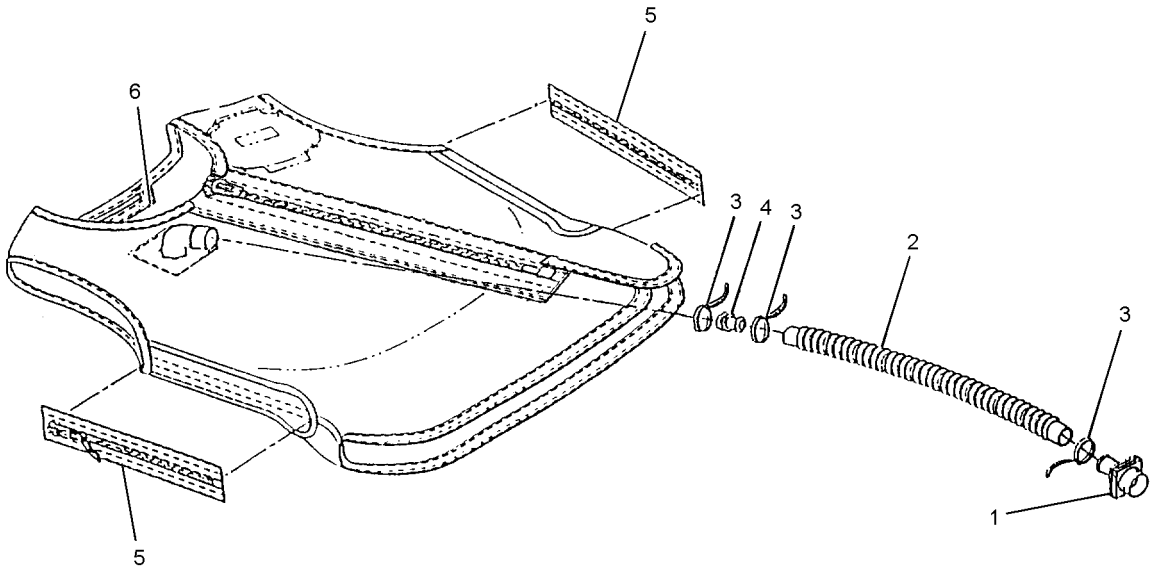

DETAIL A

4-10

Figure 4-11. CSU-21/P22P-16 Counter Pressure Vest

Figure and Index Number	Part Number	Description 1 2 3 4 5 6 7	Units Per Assembly	Usable On Code
4-11	3473AS500-1	VEST, Assembly, Small (GENTEX . . . . . P/N 93D8517-1)	1	
	3473AS500-2	VEST, Assembly, Medium (GENTEX . . . . . P/N 93D8517-2)	1	
	3473AS500-3	VEST, Assembly, Large (GENTEX . . . . . P/N 93D8517-3)	1	
	3473AS500-4	VEST, Assembly, X-large (GENTEX . . . . . P/N 93D8517-4)	1	
-1	3473AS520-1	. VALVE, Assembly (GENTEX . . . . . P/N G033-1012-01)	1	
-2	3473AS518-1	. HOSE, Supply, Vest	1	
-3	MS3367-1-0	. STRAP, Tiedown	3	
-4	89C7784-1	. ADAPTER, Elbow, Vest	1	
-5	3473AS504-01	. FASTENER, Slide, Left small	2	
	3473AS504-02	. FASTENER, Slide, Left medium	2	
	3473AS504-03	. FASTENER, Slide, Left large/X-large	2	
	3473AS504-04	. FASTENER, Slide, Right small	2	
	3473AS504-05	. FASTENER, Slide, Right medium	2	
	3473AS504-06	. FASTENER, Slide, Right large/X-large	2	
-6	89D7671-29	. LOOP, Stowage	1	

NUMERICAL INDEX

Part Number	Figure and Index Number	SM&R Code
AN814-12-8D	4-9-5	
B43XVF4	4-9-6	
CC-TM-12	4-9-9	
GG-G-76	4-9-9	
MIL-C-4109	4-9-7	
	4-9-8	
MIL-F-21840	4-10-4	
	4-10-5	
MS27404-8D	4-9-4	
MS27755	4-9-1	
MS3367-1-0	4-11-3	
NO NUMBER	4-9	
	4-9-3	
PMCD22-04	4-10-3	
TBD	4-10	
10225-01	4-10-1	
18976-01	4-10-2	

Part Number	Figure and Index Number	SM&R Code
3473AS500-1	4-11	
3473AS500-2	4-11	
3473AS500-3	4-11	
3473AS500-4	4-11	
3473AS504-01	4-11-5	
3473AS504-02	4-11-5	
3473AS504-03	4-11-5	
3473AS504-04	4-11-5	
3473AS504-05	4-11-5	
3473AS504-06	4-11-5	
3473AS518-1	4-11-2	
3473AS520-1	4-11-1	
5415L	4-9-2	
89C7784-1	4-11-4	
89D7671-29	4-11-6	
97C9830-1	4-10-2	

THIS PAGE INTENTIONALLY LEFT BLANK.

CHAPTER 5

ANTI-EXPOSURE ASSEMBLIES

Section 5-1. Description

5-1. GENERAL.

5-2. This chapter covers constant wear and quick donning anti-exposure assemblies. Anti-exposure assemblies are designed to protect the aircrewmember or passengers from exposure to cold water conditions in the event of immersion. The constant wear assemblies provide additional protection from cold weather.

NOTE

Naval Air Systems Command (NAVAIRSYSCOM) has issued messages entitled, Cold Weather Protective Clothing, which authorize procurement and use of items of supplemental cold weather clothing configurations. These messages identify acceptable items which provide cold weather protection, their procurement sources, and information for procurement and use. These items are known as Non-Developmental Items (NDI) which meet or exceed Navy performance requirements when worn with items of clothing currently authorized for use.

NDI items procured under authority of cold weather protective clothing messages should be maintained and cared for in accordance with manufacturer's instructions accompanying the item.

5-3. CONFIGURATION.

5-4. CONSTANT WEAR ASSEMBLIES. The constant wear assemblies consist of a waterproof outer garment worn over cold weather underwear. Specific configurations for the various assemblies are outlined in the applicable section.

5-5. QUICK DONNING ASSEMBLY. The Quick Donning Anti-Exposure Coverall, CWU-60/P, consists of a waterproof outer garment with attached mittens/gloves, hood, and boots. An inflatable hood is stowed in the pocket of the coverall. In case of an emergency, the CWU-60/P assembly is donned over the flight coverall, CWU-45/P Extreme Cold Weather Jacket and CWU-18/P Extreme Cold Weather Trousers. The Survival/Flotation Vest Assembly shall be worn over the CWU-60/P coverall and the helmet shall be worn under the CWU-60/P Hood Assembly.

5-6. PASSENGER ASSEMBLY. There is an assembly designed to be worn over a uniform or civilian clothes for passengers of fixed wing and rotary aircraft. All passengers shall don the assembly prior to boarding the aircraft.

5-7. APPLICATION.

5-8. The latest available type continuous wear or quick donning anti-exposure suits, as appropriate, shall be provided for flight personnel and passengers of operational type naval aircraft when in the event of a mishap there would be a significant risk of water entry and when any of the following conditions prevail:

1. The water temperature is 50°F or below.

2. The outside air temperature (OAT) is 32°F (wind chill factor corrected) or below.

5-9. If the water temperature is between 50° and 60°F, the commanding officer of the unit concerned must make an assessment based on search and rescue (SAR) factors as follows:

1. Assess the maximum probable rescue time. This should be a function of mission distance, SAR equipment and SAR location.

2. Determine the worst water temperature that will occur in the mission area during the time period of the flight.

3. Using Figure 5-1 determine whether anti-exposure suits are required.

4. When water temperature is below 60°F and anti-exposure suits are not required, flight equipment ensemble shall include anti-exposure, aramid, high temperature-resistant undergarments. The wearing of double layers of these garments can significantly improve anti-exposure performance and should be encouraged.

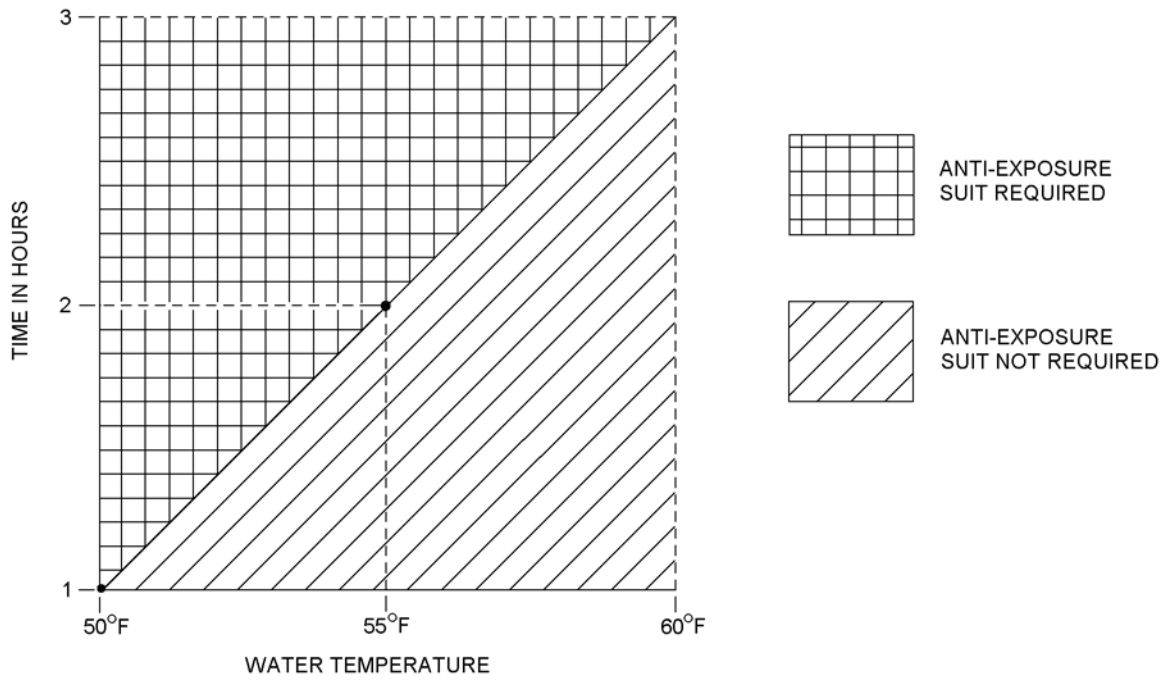

5-1

Figure 5-1. Anti-Exposure Suit Requirements

Section 5-2. A/P22P-6 Series Anti-Exposure Apparel Assemblies, Constant Wear

5-10. GENERAL.

NOTE

Paragraphs in this section pertain to the A/P22P-6 series Anti-Exposure apparel assemblies. The A/P22P-6 series consist of the A/P22P-6(V)2, A/P22P-6A(V)2, A/P22P-6B(V)2, A/P22P-6C(V)2 and A/P22P-6D(V)2 assemblies, except where noted.

5-11. The A/P22P-6 series Anti-Exposure Apparel Assemblies, Constant Wear (Figure 5-2) are continuous wear assemblies designed to keep the wearer dry. The complete assemblies provide protection from the thermal effects of cold water immersion in the event of emergency over water aircraft egress.

5-12. CONFIGURATION.

5-13. The A/P22P-6 series Anti-Exposure Apparel Assemblies, Constant Wear, consist of the Components listed in Table 5-1.

NOTE

Because of a one time severe shortage of CWU-62/P coveralls, the Air Force CWU-74/P Anti-Exposure suit was authorized for wear. The CWU-74/Ps currently in service are authorized for use. New CWU-74/Ps are not authorized to be ordered from supply.

The CWU-74/P shall be fit, maintained and repaired the same as the CWU-62/P Series Anti-Exposure Coverall.

5-14. UNDERCLOTHING. The combination of undergarments that shall be worn with the CWU-62/P series anti-exposure coverall depends on water temperature. See Table 5-1 and Table 5-2 for the recommended combinations. Refer to Chapter 3 for detailed descriptions and sizing information for underwear.

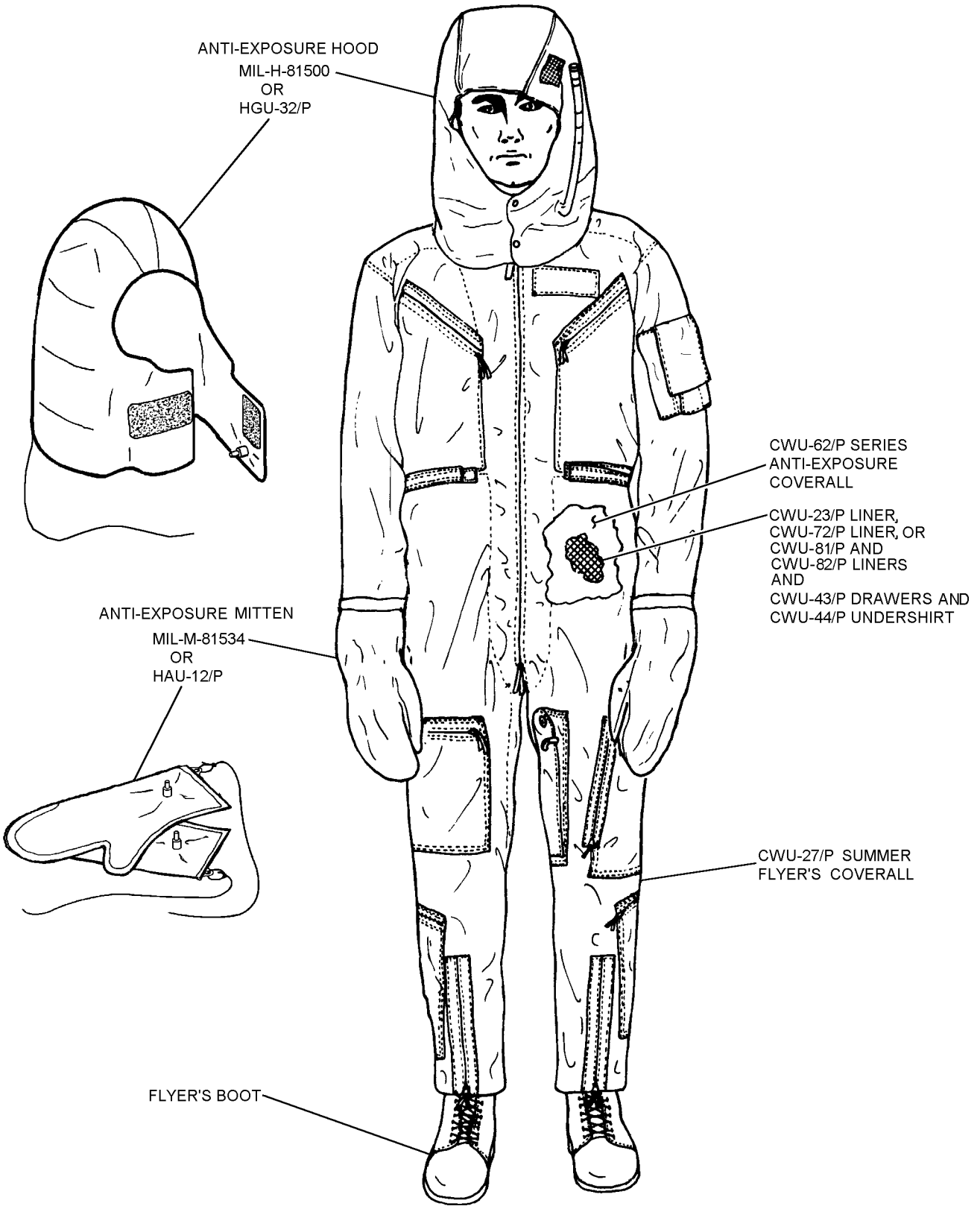

5-5

Figure 5-2. A/P22P-6 Series Anti-Exposure Apparel Assemblies, Constant Wear

Table 5-1. Components of A/P22P-6 Series Anti-Exposure Apparel Assemblies, Constant Wear

Component Nomenclature (Note 1)	Reference (paragraph)	Assemblies (A/P22P-)				
		6(V)2	6A(V)2	6B(V)2	6C(V)2	6D(V)2
CWU-43/P Drawers	3-282	X	X	X	X	X
CWU-44/P Undershirt	3-282	X	X	X	X	X
CWU-23/P Liner, Anti-Exposure	3-218	X	O	O	O	O
CWU-72/P Liner, Anti-Exposure	3-240	O	X	X	X	X
CWU-81/P Liner, Anti-Exposure (Shirt, women only)	3-261	X	X	X	X	X
CWU-82/P Liner, Anti-Exposure (Drawers, women only)	3-261	X	X	X	X	X
CWU-62/P Anti-Exposure Coverall	5-16	X	X	—	—	—
CWU-62A/P Anti-Exposure Coverall	5-16	—	—	X	—	—
CWU-62B/P Anti-Exposure Coverall	5-16	—	—	—	X	—
CWU-62C/P Anti-Exposure Coverall	5-16	—	—	—	—	X
CWU-74/P Anti-Exposure Coverall	5-17	O	O	O	O	O
SRU-25/P Socks	5-18	X	X	—	—	—
CWU-75/P Anti-Exposure Socks	5-19	—	—	X	X	X
CWU-27/P Flyer's Summer Coverall or MEAFFS	5-20	X	X	X	X	X
HGU-32/P Hood	3-712	—	—	X	X	X
HAU-12/P Mittens	3-675	—	—	X	X	X

Legend: X - Required
O - Optional
— - Not Applicable

Notes: 1. Multi Climate Protection System (MCPS) garments are authorized as replacements for some of the items above. See MCPS section of Chapter 3 for guidance.

Table 5-2. Recommended Underclothing Based on Water Temperature

Water Temperature	Recommended Underclothing
Above 60°F	CWU-43/P and CWU-44/P Aramid (Nomex) Cold Weather Underwear, Cotton Socks
50 to 60°F	CWU-43/P and CWU-44/P Aramid (Nomex) Cold Weather Underwear, CWU-23/P Liner or CWU-72/P Liner, Wool Socks
Below 50°F	CWU-43/P and CWU-44/P Aramid (Nomex) Cold Weather Underwear (two sets), CWU-23/P Liner or CWU-72/P Liner, Heavy Wool Socks
Note: For proper anti-exposure protection, a CWU-62/P Series Anti-Exposure Coverall must be worn over the recommended underclothing.	

5-15. ANTI-EXPOSURE COVERALL LINERS. See Table 5-1 for the authorized liners that can be worn with the CWU-62/P series coveralls. Refer to Chapter 3 for detailed descriptions and sizing and fitting information of the different authorized liners.

5-16. CWU-62/P SERIES COVERALL. The CWU-62/P anti-exposure coverall (Figure 5-3), CWU-62A/P anti-exposure coverall (Figure 5-4) and CWU-62B/P anti-exposure coverall (Figure 5-5) are one-piece garments supplied in 12 sizes (Table 5-3). The CWU-62C/P anti-exposure coverall (Figure 5-6) is a one-piece garment supplied in 9 sizes (Table 5-4). These coveralls shall not be worn in direct contact with the skin. The function of the anti-exposure coverall is most effective when worn over recommended undergarments. Skin irritation is known to result from wearing the coverall in direct contact with the skin. It is a lightweight coverall that prevents water from entering, but permits bodily produced moisture vapor to pass out, thus minimizing heat and moisture buildup. Proper maintenance is essential to the service life and safety of this coverall, as well as proper sizing and fitting. The CWU-62/P neck seal and wrist seals are manufactured from natural rubber, flocked on both sides. The CWU-62A/P, CWU-62B/P, and CWU-62C/P neck and wrist seals are manufactured from latex rubber. CWU-62A/P, CWU-62B/P, and CWU-62C/P wrist seals are procured separately from their respective coverall and are sized to the individual aircrewmember. SRU-25/P socks and CWU-75/P anti-exposure socks are procured separately. Either socks may be installed on any anti-exposure coverall. The entrance opening across the chest and the relief portal are sealed with water- and pressure-sealing slide fasteners.

5-17. CWU-74/P COVERALL. The CWU-74/P Anti-Exposure Coverall is sized the same as CWU-62/P Series Anti-Exposure Coverall. CWU-74/P Anti-Exposure Coveralls will be issued on a limited basis until such time as assets of CWU-62/P Series are available through supply. CWU-74/P Anti-Exposure Coverall shall remain in the custody of the individual to whom it was issued and remain in service until beyond economical repair. The coverall has two breast pockets, a right thigh pocket, a lower right and left pocket, and pencil pocket on the left upper sleeve. The relief slide fastener is eight inches long and installed horizontally on the coverall. The coverall comes with neck and wrist seals installed and can be placed in service using the installed seals. Replacement neck and wrist seals shall be the same as for the CWU-62/P Series. Anti-exposure socks shall be CWU-75/P and must be procured separately.

5-18. SRU-25/P SOCKS. SRU-25/P Socks are supplied in eight sizes (Table 5-5). The socks are one-piece and are molded to shape to provide comfort and a good fit. Tops of socks extend above flight boots to reduce bulk and restriction.

NOTE

To determine proper size, see paragraph 5-33.

5-19. CWU-75/P ANTI-EXPOSURE SOCKS. The CWU-75/P Anti-Exposure Socks are supplied in 13 sizes (Table 5-6). The anti-exposure socks are of sewn construction made of waterproof, breathable, stretchable fabric. Tops of socks extend above flight boots to reduce bulk and restriction.

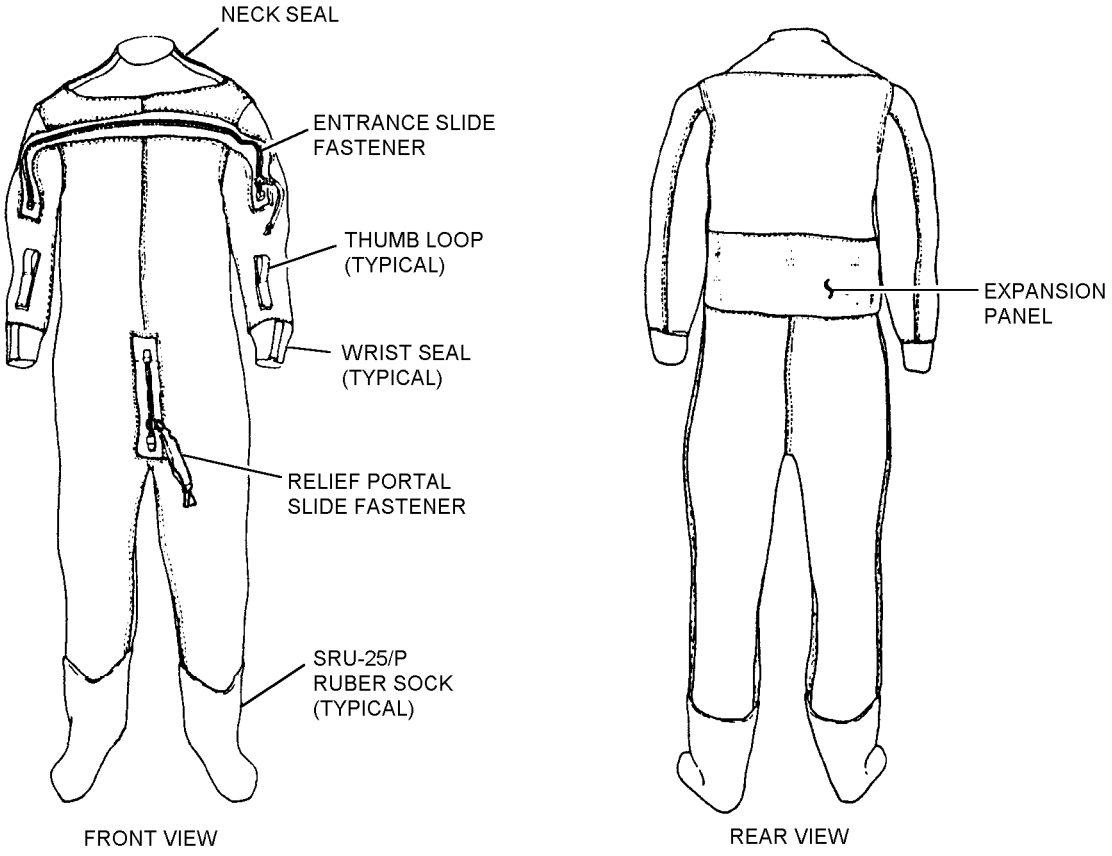

Figure 5-3. CWU-62/P Anti-Exposure Coverall

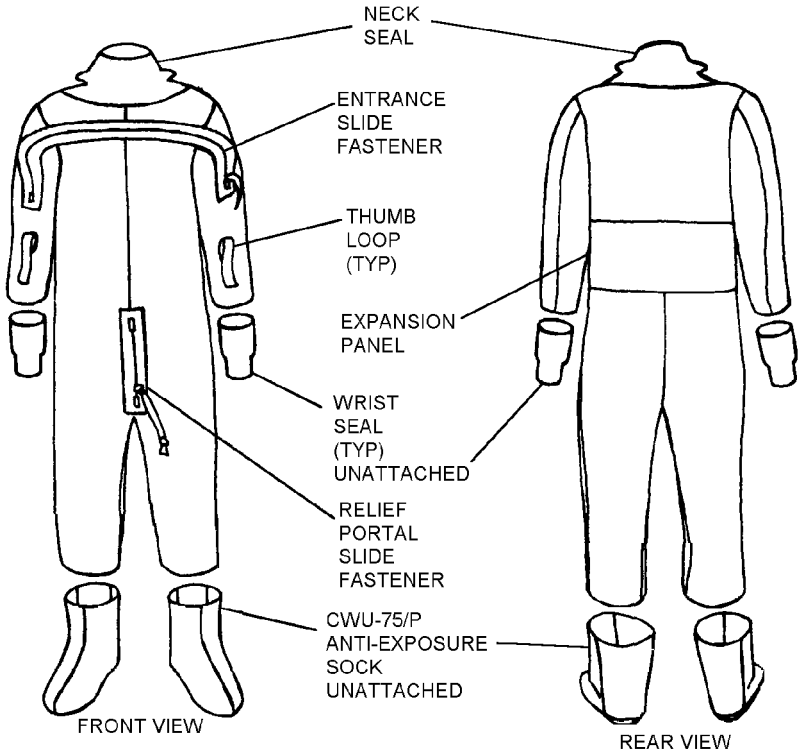

Figure 5-4. CWU-62A/P Anti-Exposure Coverall

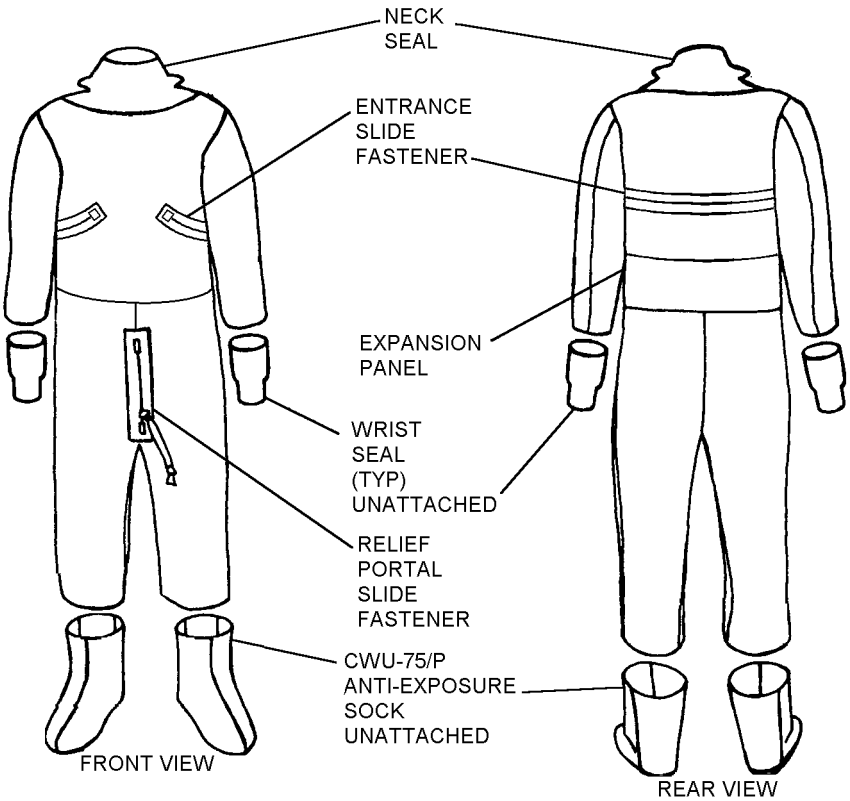

5-10

Figure 5-5. CWU-62B/P Anti-Exposure Coverall

Table 5-3. Sizing Guide (CWU-62/P, CWU-62A/P and CWU-62B/P Anti-Exposure Coverall)

Height (inches)	Weight (pounds)	Chest Circumference	CWU-62/P and -62A/P NIIN	CWU-62B/P NIIN	Size
63-66	125-149	32-36	01-179-9992	01-388-0928	1 - (Small Short)
66-69	125-149	32-36	01-174-2047	01-388-0976	2 - (Small Regular)
69-72	125-149	32-36	01-176-9158	01-388-0920	3 - (Small Long)
65-67	150-174	37-40	01-176-9159	01-388-0934	4 - (Medium Short)
67-70	150-174	37-40	01-176-9160	01-388-0971	5 - (Medium Regular)
70-73	150-174	41-44	01-176-9161	01-388-0962	6 - (Medium Long)
66-69	175-199	41-44	01-176-9162	01-388-0963	7 - (Large Short)
69-72	175-199	41-44	01-176-9163	01-388-0969	8 - (Large Regular)
72-75	175-199	45-47	01-176-9164	01-388-0937	9 - (Large Long)
67-70	200-224	45-47	01-176-9165	01-388-0966	10 - (Extra Large Short)
70-73	200-224	45-47	01-176-9166	01-388-0924	11 - (Extra Large Regular)
73-76	200-224	45-47	01-176-9167	01-388-0922	12 - (Extra Large Long)

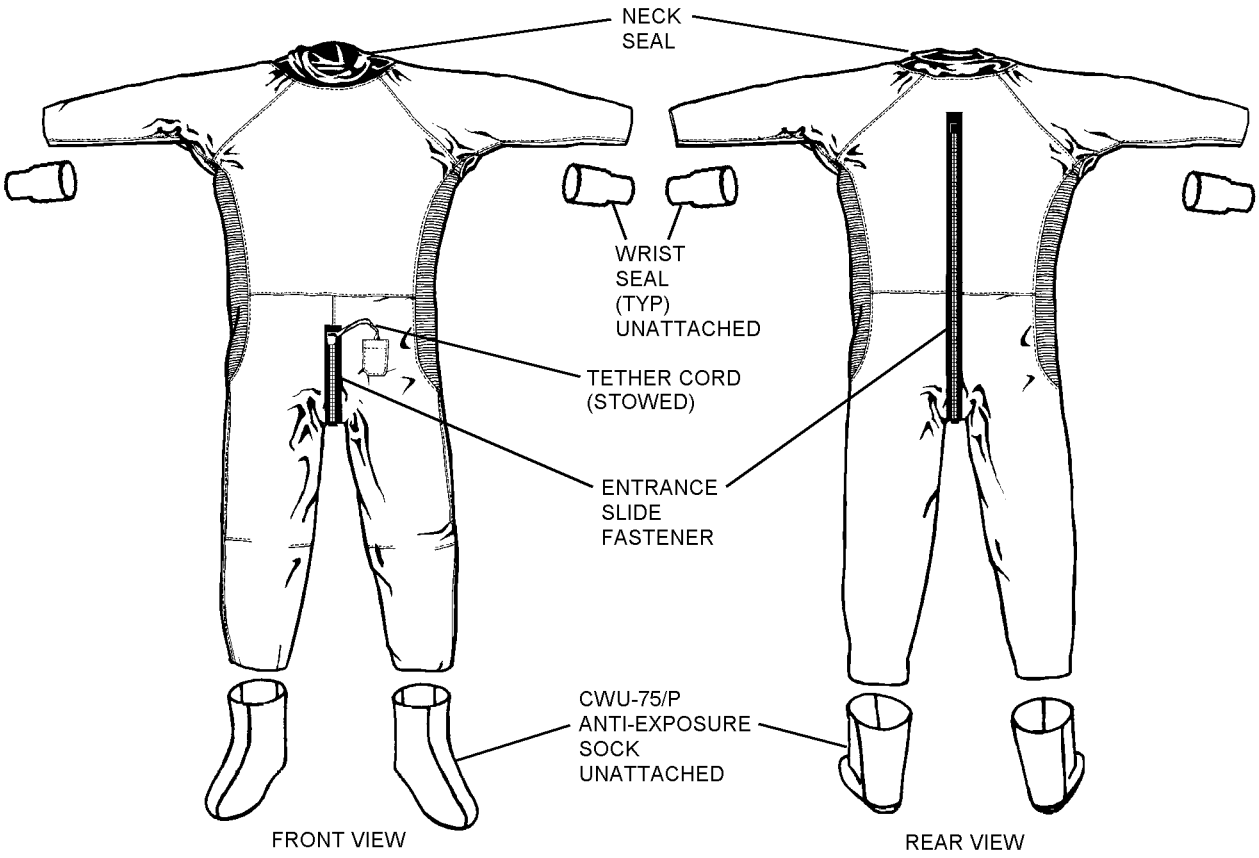

5-10a

Figure 5-6. CWU-62C/P Anti-Exposure Coverall

Table 5-4. Sizing Guide (CWU-62C/P Anti-Exposure Coverall)

Height (inches)	Hip Size (inches)	NIIN	Size
less than 64.5	less than 36	01-483-8563	(1) Small/Short
64.5 - 67.5	less than 36	01-483-8564	(2) Small/Regular
more than 67.5	less than 36	01-483-8565	(3) Small/Long
less than 64.5	36 - 40	01-483-8567	(4) Medium/Short
64.5 - 67.5	36 - 40	01-483-8585	(5) Medium/Regular
more than 67.5	36 - 40	01-483-8572	(6) Medium/Long
less than 64.5	more than 40	01-483-8573	(7) Large/Short
64.5 - 67.5	more than 40	01-483-8574	(8) Large/Regular
more than 67.5	more than 40	01-483-8577	(9) Large/Long

Table 5-5. Sizing Guide (SRU-25/P Rubber Socks)

Narrow	NIIN	Regular	NIIN
5 1/2 N(B)	00-435-9652	6 R(D)	00-435-9656
7 1/2 N(B)	00-435-9653	8 R(D)	00-435-9656
9 1/2 N(B)	00-435-9654	10 R(D)	00-435-9656
11 1/2 N(B)	00-435-9655	12 R(D)	00-435-9656

Table 5-6. Sizing Guide (CWU-75/P Anti-Exposure Socks)

NIIN	Size
01-412-0949	3
01-316-6041	4R
01-317-7802	5R
01-315-9400	6R
01-316-1887	7R
01-316-1888	8R
01-316-1889	9R
01-315-9401	10R
01-315-9402	11R
01-315-9403	12R
01-311-0315	13R
01-412-0948	14
01-412-0951	15

NOTE

To determine proper size, see paragraph 5-33.

5-20. MEAFFS OR CWU-27/P FLYER'S SUMMER COVERALL. The CWU-27/P coverall is a one-piece, unlined garment fabricated from aramid cloth. The coverall is used with standard personal equipment and shall be worn over the CWU-62/P series anti-exposure coverall. The flyer's summer coverall is fitted to the aircrewmember and normally corresponds to regular suit size. For sizes and dimensions, refer to Chapter 3.

5-21. SUPPLEMENTARY EQUIPMENT.

5-22. HOOD ASSEMBLY, ANTI-EXPOSURE. Refer to Section 3-37 for the HGU-32/P hood.

5-23. MITTENS, ANTI-EXPOSURE. Refer to Section 3-35 for the HAU-12/P mittens.

5-24. APPLICATION.

5-25. The A/P22P-6 Series Anti-Exposure Apparel Assemblies shall be worn by aircrewmembers for flight operations in accordance with the climatic and operational requirements established by the NATOPS General Flight and Operational Instructions Manual OPNAVINST 3710.7 (Series).

5-26. FUNCTION.

5-27. NORMAL. The A/P22P-6 Series Anti-Exposure Apparel Assemblies are intended to provide the aircrewmember with a lightweight coverall assembly that allows performance of all required flight operations without restricting body movements. The coveralls are moisture/vapor permeable to prevent excessive buildup of body heat.

5-28. EMERGENCY. In the event of immersion in water the CWU-62/P series coverall fabric will not permit entry of water, keeping the wearer dry. All components of the assembly (Table 5-1) must be worn to achieve the greatest level of exposure protection.

5-29. MODIFICATIONS.

5-30. The only modifications to the A/P22P-6 Series Anti-Exposure Apparel Assemblies authorized at this time are increasing leg or arm length of the CWU-62/P series coverall if required. Refer to paragraphs 5-87 and 5-88.

5-31. SIZING.

5-32. The A/P22P-6 Series Anti-Exposure Apparel Assemblies shall be properly sized to the aircrew-member based on the height, weight, and chest measurements shown in Table 5-3. Determine chest circumference for the CWU-62/P series coverall by first donning one CWU-44/P Cold Weather Undershirt. Determine chest circumference for the CWU-62/P and CWU-62A/P by taking a tape measurement at nipple height with the

aircrewmember wearing one CWU-44/P cold weather undershirt and a liner (CWU-23/P, CWU-72/P, or CWU-81/P as applicable) or two CWU-44/P cold weather undershirts.

5-33. The size of SRU-25/P socks (Table 5-5) and CWU-75/P Anti-Exposure socks (Table 5-6) shall be governed by the size of the flight boot to be used. For the SRU-25/P, usually a sock one size smaller than the boot to be used will provide an acceptable fit (for example, size 8 socks for size 9 boots). For the CWU-75/P, a sock the same size as the boot will be required. To determine the size socks and boots required, the aircrewmember should don a pair of heavy wool socks, then don a pair of SRU-25/P socks or CWU-75/P Anti-Exposure socks corresponding to normal boot size. The socks (SRU-25/P or CWU-75/P) should be in a slightly stretched condition to prevent wrinkles or bulk in the boot but should not be fitted too tightly. Verify that the fit of the SRU-25/P or CWU-75/P socks is correct and comfortable. The aircrewmember should then don a boot and assure that the fit is comfortable. If smaller or larger SRU-25/P or CWU-75/P socks and/or boots are required, refit as necessary.

5-34. FITTING.

5-35. FITTING THE CWU-62/P SERIES COVERALL. Neck seals (for CWU-62/P Series coverall) and wrist seals (for CWU-62/P only) may be trimmed at the initial fitting, but the seals tend to adjust to the wearer after a short period of time. If no excessive seal restriction exists, and seal fit is acceptable to the aircrewmember, the seals should be left as issued. Neck seals shall fit snugly and remain in direct contact with the neck through all normal head movements. Wrist seals shall fit tightly enough to prevent water entry, but not tight enough to restrict blood flow. If seal sizing is required, proceed as follows:

CAUTION

Do not mark coverall material with ballpoint pen or lead pencil. Use only tailor's chalk or china marking pencil. Trim neck seals with extreme caution. A smooth trim line is essential. Excessive trimming could result in loose seals that leak and necessitate replacement. Avoid nicking seal fabric, as this could result in tearing seal when donning and doffing, and also could result in skin irritation.

1. Neck Seal Trimming. To trim neck seals, proceed as follows:

a. Mark a line around circumference of neck opening. Trimming increments shall not exceed 1/4 inch at a time.

b. Carefully cut along this line with a sharp pair of scissors.

2. (CWU-62/P only) Flocked Wrist Seals Trimming. To trim flocked wrist seals, proceed as follows:

a. Mark a line around circumference of wrist opening. Trimming increments shall not exceed 1/8 inch at a time.

b. Carefully cut along this line with a sharp pair of scissors.

3. Latex Wrist Seals. There are two types of latex wrist seals.

a. The first type is listed in Table 5-9 and comes in various sizes. It is shaped such that trimming would have no effect on the fitting of the wrist seal. Trimming is therefore not authorized.

b. The second type of wrist seal is a trimmable wrist seal. The wrist seal has trim lines spaced approximately 3/16 inch apart around the top circumference of the seal. To trim the wrist seal, proceed as follows:

(1) Starting at the top trim line, carefully cut along line with a sharp pair of scissors.

(2) Check fit. If not correct, continue trimming down one line at a time until fit is correct.

4. After trimming seals, have aircrewmember don coverall to determine seal restriction and water-sealing characteristics. Make any adjustments in accordance with steps 1 through 3.

5-36. INITIAL FITTING OF SRU-25/P SOCKS AND CWU-75/P ANTI-EXPOSURE SOCKS. Select the correct size socks (Table 5-5 or Table 5-6) using paragraph 5-33 as a guide. Attach to the coveralls as follows:

Materials Required

Quantity	Description	Reference Number
As Required	Tape, Seam, 1 1/2-Inch	NIIN 01-193-0469
	-or-	
	Tape, Seam, 7/8-Inch	NIIN 01-189-6361
As Required	Thread, Nylon, Size E	V-T-295 NIIN 00-244-0609
1	Roller, Hand	GGG-R-00620 or commercial
1	Pencil, China Marking	SS-P-196
1	Chalk	SS-C-266

CAUTION

Do not mark coverall with ballpoint pen or lead pencil. Use only china marking pencil or chalk.

NOTE

Installation of either SRU-25/P socks or CWU-75/P anti-exposure socks to CWU-62/P Series coverall is authorized. Document all maintenance actions in accordance with COMNAVAIRFORINST 4790.2.

CWU-75/P socks will replace SRU-25/P socks by attrition.

Socks may be replaced individually and need not be replaced as a pair.

1. Have aircrewmember don the A/P22P-6 Series assembly (except hood, mittens, and CWU-27/P), the appropriate PCU Series torso harness, if applicable, and proper size heavy wool socks.

2. Mark coverall legs and socks (L and R) on inside and front and back to ensure socks are matched to correct leg during installation.

3. Have aircrewmember sit in a straight-back chair with legs drawn back, heels directly below kneecaps and feet flat on floor.

NOTE

If aircrewmember's leg length is such that allowances provided in steps 4 through 7 (2-inch sock fold and 1-inch allowance beyond inseam mark) are not possible, refer to paragraph 5-87 for coverall leg extending instructions.

Removing top 2 inches of sock at initial installation is intended to ensure adequate coverall leg material remains for future sock replacements.

Ensure not to cut coverall too short.

4. Turn top 2 inches of sock down, forming a temporary cuff. Mark the circumference of coverall legs where they meet top of folded socks.

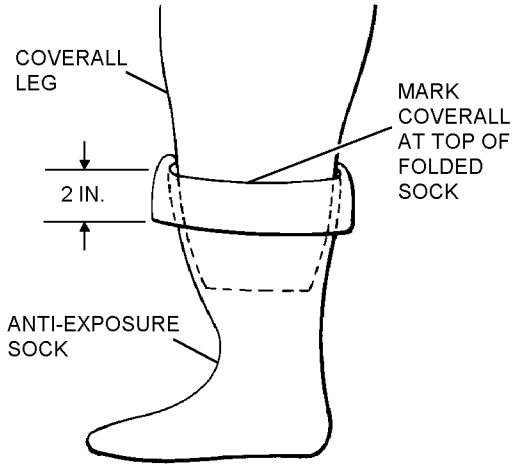

5p73s4

Step 4 - Para 5-36

5. Have aircrewmember doff socks and coveralls.

6. Remove top 2 inches of sock with a pair of sharp scissors.

7. Remove excess material from coverall leg by cutting a line 1 inch below the circumferential mark applied in step 4. Ensure leg is cut perpendicular to lengthwise direction of leg. Make alignment marks at front of coveralls leg and sock to ensure sock will be properly aligned with leg during attachment.

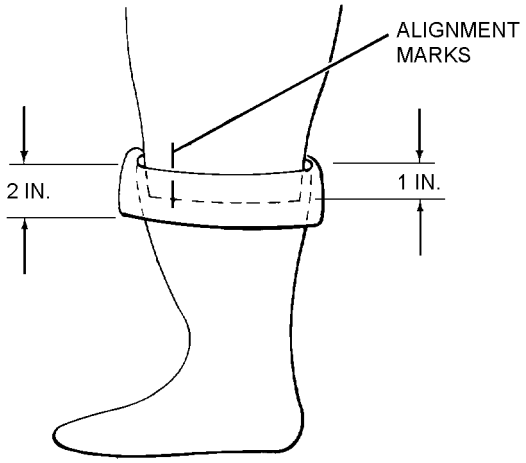

5p73s7

Step 7 - Para 5-36

8. Turn coverall inside out.

NOTE

Due to slight differences in circumference of coverall leg and sock opening, it is recommended that alignment marks be added to both items before sewing. Make marks at front, back and both sides, equally spaced around circumference of both openings. It may be necessary to manually induce an uneven feeding of materials into sewing machine in order to compensate for differences in sock and coverall leg circumferences, thereby minimizing pleats or puckers.

9. Lay coverall out flat, face up.

NOTE

When attaching socks to coveralls, ensure right sock is on right coverall leg and left sock is on left coverall leg.

10. Insert sock into leg opening, so that right sides of sock and coverall leg are facing each other, and toe is pointing up (toward front).

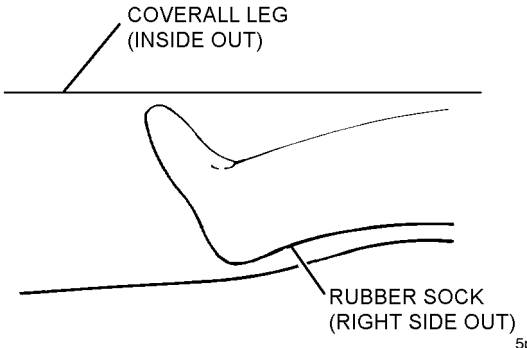

5p73s10

Step 10 - Para 5-36

11. Beginning at front of leg, with leg and sock alignment marks matched, attach sock with one row of stitches, 1/4 inch from cut edges, 5 to 7 stitches per inch, using nylon size E thread. Overlap stitching 1/2 inch. Do not backstitch.

12. After removing suit from sewing machine, pull boot out through bottom of leg opening, exposing cut edges of seam.

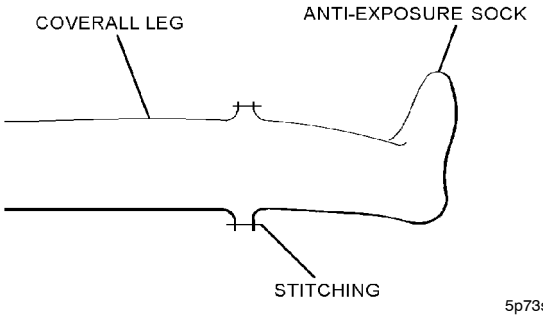

5p73s12

Step 12 - Para 5-36

13. Fold cut edges of seam down over sock. Make fold as near stitch line as possible.

WARNING

Prior to application of seam tape, Aircrew Survival Equipmentman must be familiar with heat sealing machine operating procedures in NAVAIR 17-10DC-1. Refer to paragraph 5-68 for application of seam tape. Do not allow any coverall material threads or sewing machine thread to protrude from under seam tape.

NOTE

Seam tape will be on the inside of coverall when finished.

14. Apply one layer of 1 1/2-inch seam tape to seam, keeping stitch line and cut edges as nearly centered under tape as possible. Overlap ends of seam tape 1 inch.

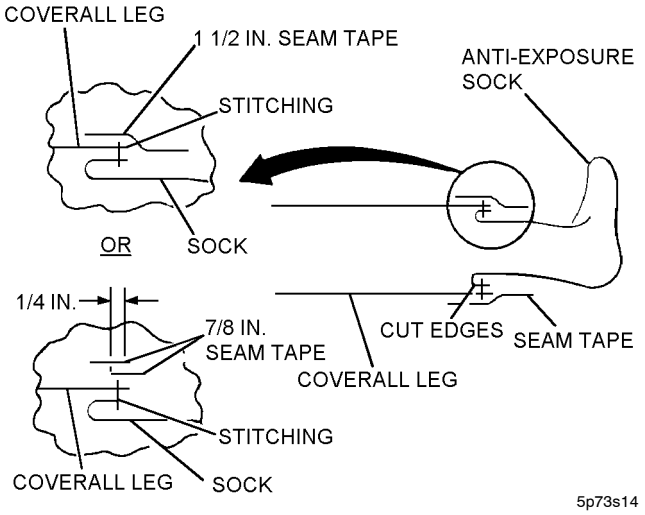

Step 14 - Para 5-36

NOTE

1 1/2-inch seam tape should be used when available.

If 7/8-inch seam tape is used, a second layer of seam tape may be applied, if necessary, to adequately cover stitching and cut edges of seam.

15. Immediately after lifting off heat sealer, smooth out any air pockets with a hand roller by rolling thoroughly along both sides of seam where air pocket occurs.

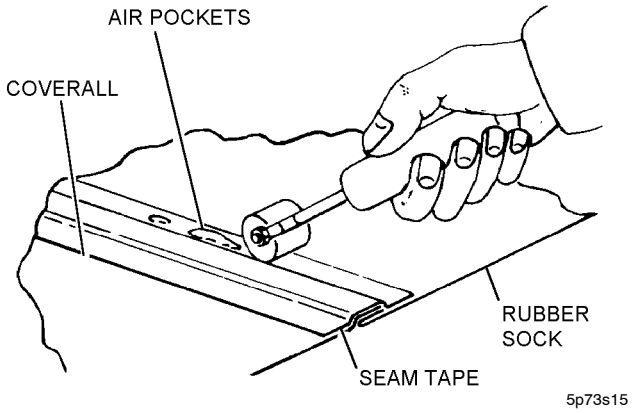

Step 15 - Para 5-36

16. Turn coverall right side out.

17. Verify inspection and/or repair and/or fit.

18. Document in accordance with COMNAVAIRFORINST 4790.2.

5-37. FITTING THE CWU-27/P SUMMER FLYER'S COVERALL. Select a CWU-27/P coverall one size larger than the size indicated in Chapter 3.

5-38. IDENTIFYING THE CWU-62/P SERIES COVERALL. After CWU-62/P series coverall has been fitted in accordance with paragraph 5-35 and the proper size socks have been attached, the coverall becomes the personal equipment of the aircrewmember and should be labeled as follows:

Materials Required

Quantity	Description	Reference Number
As Required	Tape, Seam, 1 1/2-Inch	NIIN 01-193-0469
1	Sealer, Heat, Seam and Patch	MIL-S-85634
1	Roller, Hand	GGG-R-00620
1	Laundry Marking Ink	NIIN 00-161-4229
1	Stencil, Brush	NIIN 00-248-9285

1. Cut a label approximately 3 inches in length from seam tape and clearly print aircrewmember's name and organization on uncoated side of tape using indelible ink.

2. Position label on inside of coverall below caution label and heat seal. Refer to paragraph 5-68 for heat sealing procedure.

3. Verify inspection and/or repair and/or fit.

4. Document in accordance with COMNAVAIRFORINST 4790.2.

5-39. DONNING.

5-40. To don the A/P22P-6 Series assembly proceed as follows:

NOTE

The anti-exposure hood and mittens are not worn during flight but remain stowed in the CWU-27/P coverall or survival vest pocket for emergency use.

1. Don CWU-43/P drawers, CWU-44/P undershirt, CWU-23/P or CWU-72/P liner, and socks as recommended in Table 5-2.

CAUTION

To avoid damage it is essential that talc be applied to the neck and wrist seals of the CWU-62A/P and CWU-62B/P, as well as to the neck, wrists and hands of the wearer prior to donning or doffing the coverall. Use care when donning or doffing. Suit fabric can be damaged. Remove watches, rings, and other sharp instruments which can puncture or abrade surfaces.

2. (CWU-62/P, CWU-62A/P or CWU-62B/P) Don the Anti-Exposure Coverall.

a. Don coverall by first inserting feet into anti-exposure socks while seated, and then pulling coverall up past waist.

b. Insert arms into sleeves.

c. Grasp upper part of coverall (CWU-62/P and CWU-62A/P behind head; CWU-62B/P in front of wearer) and pull neck seal over head. Adjust neck seal so that it is comfortable and seam tapes are aligned with shoulders.

d. Release thumb loops from hook and pile fastener tapes on sleeves. Place right loop over right thumb and extend right arm horizontally to side of body. Grasping entrance slide fastener tab with left hand, close fastener to a point past center of chest. Remove right thumb from loop. Place left thumb in left loop, horizontally extend left arm to side and, grasping slide fastener tab with right hand, completely close entrance slide fastener. Ensure pull tab is firmly seated into seal block and butted against end block. Remove thumb from thumb loop and mate fastener tapes on thumb loops with tapes on sleeves.

e. Close relief portal slide fastener. Ensure pull tab is firmly seated into seal block and butted against end block.

f. Burp the suit by manually venting excess air through the neck seal by squatting at the knees and bending forward.

3. (CWU-62C/P) Don the Anti-Exposure Coverall in accordance with procedures illustrated in Figure 5-7.

4. Don flyer's boots.

5-41. DOFFING.

5-42. (CWU-62/P, CWU-62A/P and CWU-62B/P) To doff the A/P22P-6 Series assembly, carefully reverse the donning procedures.

CAUTION

When doffing CWU-62/P series anti-exposure assembly, peel suit off inside out to ensure that neck seal and wrist seals are not damaged.

5-43. (CWU-62C/P) To doff the A/P22P-6 Series assembly, carefully reverse the donning procedures. Doff the CWU-62C/P coverall in accordance with procedures illustrated in Figure 5-8.

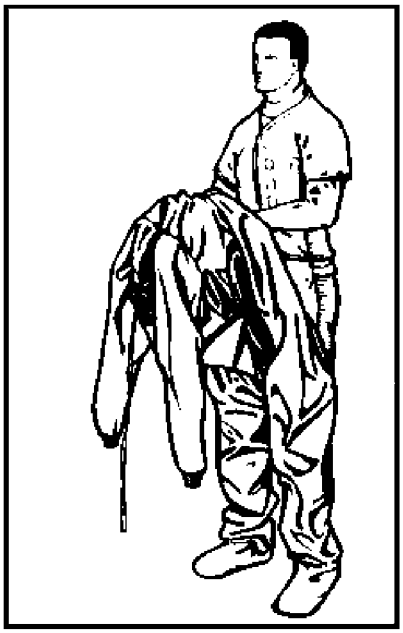

1) With coverall fully open, step into coverall so that the longest part of the slide fastener will be on your back. Pull coverall up to your knees.

2) While squatting, bend forward and lift coverall over your head.

3) Put arms and head into coverall.

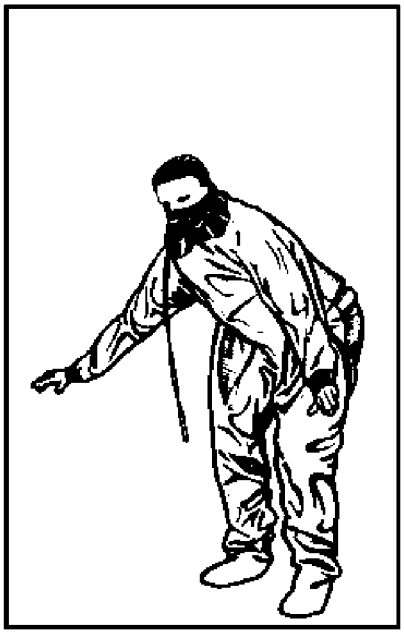

4) Once arms are in the sleeves and head is in the neck seal, begin to stand.

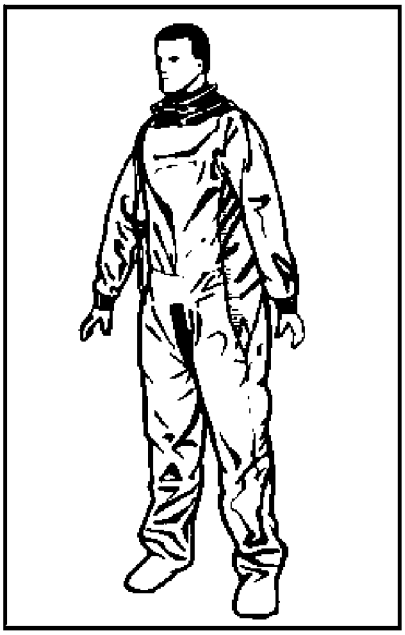

5) Allow head and hands to go through rubber seals. Once standing, adjust pant legs so that they are not twisted and slide fastener is running straight up the back.

6) Close slide fastener by leaning forward (to provide tension), and pulling tether down back, through legs, and up the front. Make sure slide fastener is fully closed.

5-10b

Figure 5-7. Donning the CWU-62C/P Anti-Exposure Coverall

1) Pull tether cord down and through legs. Bring tether over your shoulder and pull straight up while slightly bending forward (for tension). Open slide fastener fully.

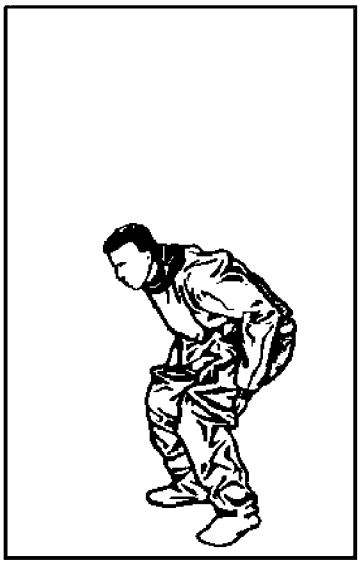

2) While beginning to squat, bring coverall over buttocks until coverall is behind your knees.

3) Reach over your shoulders and pull fabric over head and around shoulders. DO NOT PULL NECK SEAL.

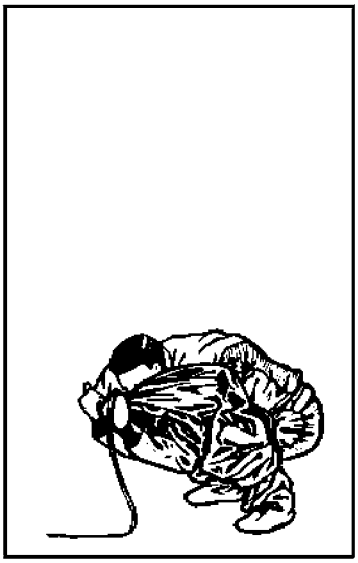

4) Pull coverall until your head slides out of the neck seal and coverall is over your shoulders.

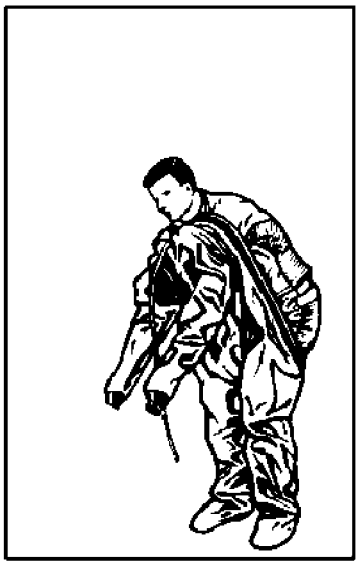

5) Begin to stand and remove your arms from coverall.

6) Stand and take coverall off by removing booties and pulling coverall off your legs.

5-10c

Figure 5-8. Doffing the CWU-62C/P Anti-Exposure Coverall

(ORGANIZATIONAL USE)_____
DATE__
ACTIVITY/SQN._____COVERALL SERIAL NO._____
C.D.I.__
REMARKS:_____
_____

(INTERMEDIATE USE)

INSPECTION/TEST REMARKS:_____
_____
_____
REPAIR REMARKS:_____
_____
REPAIRED BY_____INSPECTOR_____DATE_____

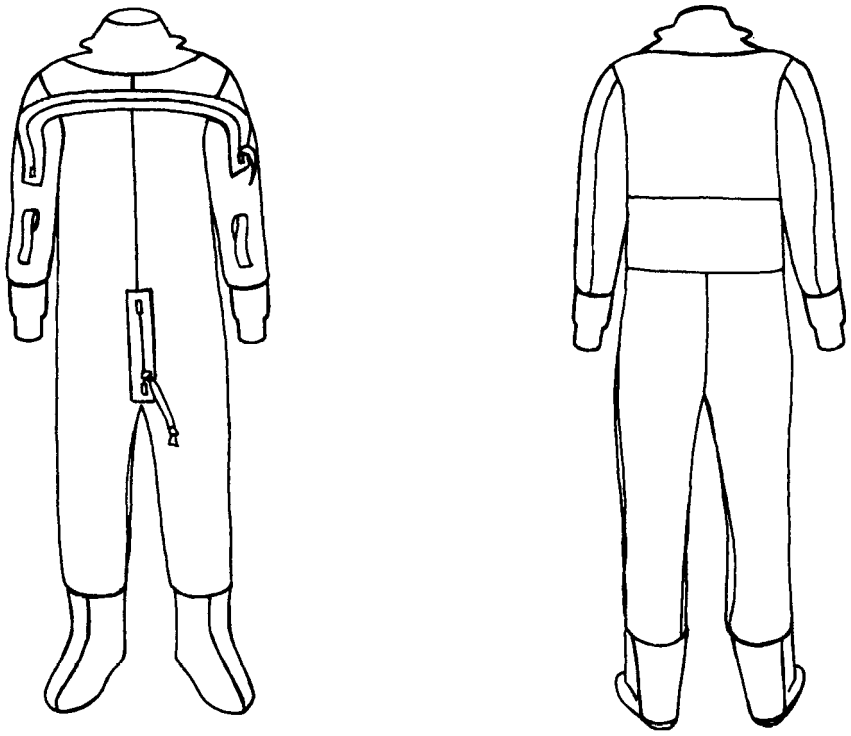

FRONT VIEW REAR VIEW

5-11

Figure 5-9. CWU-62/P or CWU-62A/P Anti-Exposure Coverall, Damage Chart

(ORGANIZATIONAL USE)_____DATE_____
ACTIVITY/SQN._____COVERALL SERIAL NO._____C.D.I._____
REMARKS:_____
_____
_____

(INTERMEDIATE USE)

INSPECTION/TEST REMARKS:_____
_____
_____
REPAIR REMARKS:_____
_____
REPAIRED BY_____INSPECTOR_____DATE_____

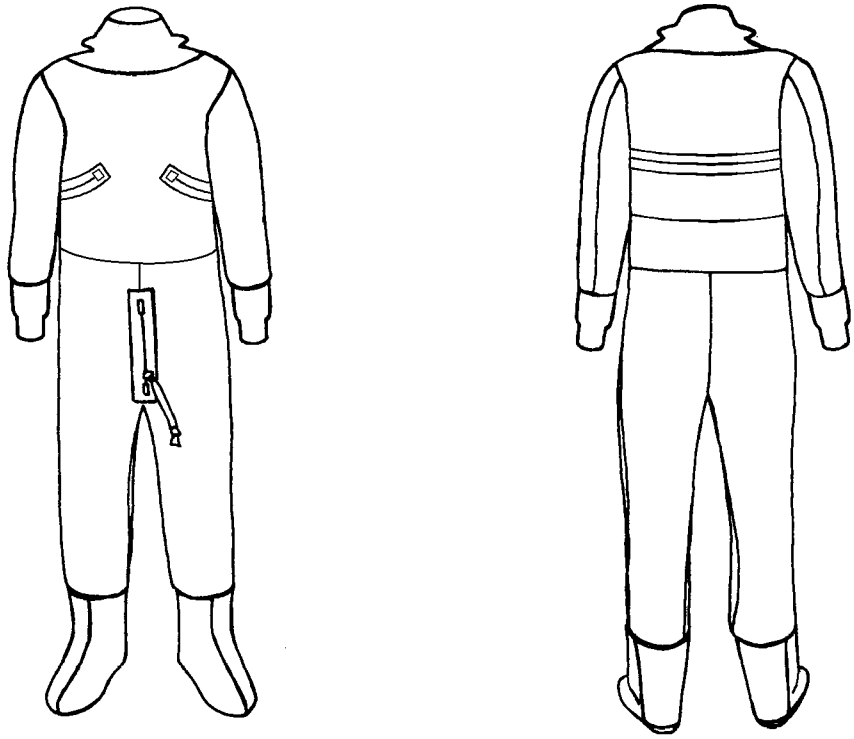

Figure 5-10. CWU-62B/P Anti-Exposure Coverall, Damage Chart

(ORGANIZATIONAL USE)_____DATE_____
ACTIVITY/SQN._____COVERALL SERIAL NO._____C.D.I._____
REMARKS:_____
_____
_____

(INTERMEDIATE USE)

INSPECTION/TEST REMARKS:_____
_____
_____
REPAIR REMARKS:_____
_____
REPAIRED BY_____INSPECTOR_____DATE_____

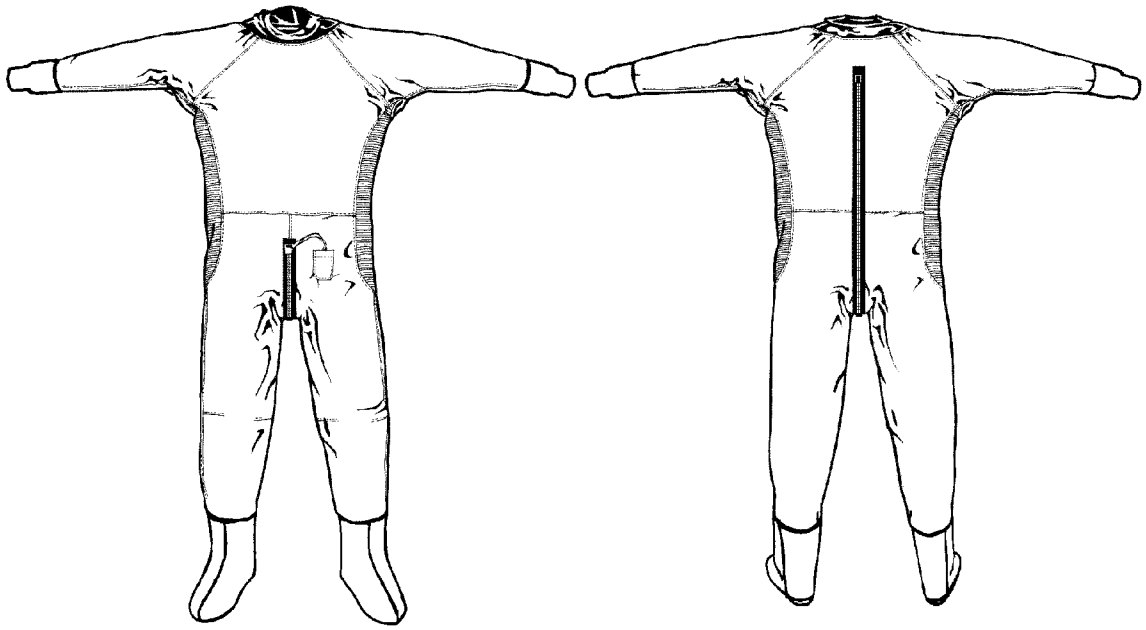

5-12a

Figure 5-11. CWU-62C/P Anti-Exposure Coverall, Damage Chart

5-44. MAINTENANCE.

5-45. Repair and replacement functions for the CWU-62/P series coverall will be accomplished at the intermediate maintenance level or above.

NOTE

Authorization is granted at organizational level to stitch wrist and neck seals and socks onto the CWU-62/P series coveralls, provided heat sealing and water tests are performed at the intermediate level.

Quality Assurance Representative (QA) points are included in inspection, repair, and replacement procedures. When a procedure is underlined, there is a QA requirement. After performing procedure, stop and have Quality Assurance Representative ensure that step has been performed correctly.

5-46. MAINTENANCE DOCUMENTS. Documents used to record history and maintenance information consist of those documents described in chapter 2 of this manual and the CWU-62/P series coverall damage chart (Figure 5-9, Figure 5-10, and Figure 5-11). The damage chart is also intended to aid the organizational level custodians of the coverall in describing other needed repairs to the intermediate level technicians. It shall be used by the intermediate level personnel as an aid during inspections. All maintenance actions and inspections shall be documented in accordance with COMNAVAIRFORINST 4790.2.

5-47. SERVICE LIFE CHECK. The service life is the time period during which the anti-exposure coverall can be maintained in service without replacement. The service life for the anti-exposure coverall is 12 years, computed from the date of manufacture. When the anti-exposure coveralls lack a legible date of manufacture (DOM) and a service life check cannot be verified, the applicable coverall shall be considered non-RFI and removed from service. If the DOM can be established via records maintained on the coverall, the DOM shall be stenciled in permanent marker on the coverall and shall be considered the DOM for the purpose of service life check. Unless otherwise noted the anti-exposure coverall service life shall start on the first date of the month of the date of manufacture and expire on the last day of that month.

NOTE

If the contract number is legible on a coverall without a legible DOM, the contract number can be used to establish a DOM. For example, a coverall with a contract number of SPO100-98-D-4018 was built sometime after the year 1998 as the contract was awarded in 1998. Thus the DOM for this particular coverall with no legible DOM, but a legible contract number SPO100-98-D-4018 could safely be established as JAN 1999.

1. Check markings for completeness, legibility and agreement with assembly records. If manufacturers tag becomes worn, loose or torn, stencil DOM on the inside of the coverall, near the entrance slide fastener, where the manufacturers label would/should normally be located.

2. Check the date of manufacture to ensure that the anti-exposure coverall is not beyond its established 12-year service life. The date of manufacture tag is located on the inside of the suit near the entrance slide fastener. The anti-exposure coverall shall be replaced if service life expires prior to the next inspection cycle, unless the next inspection cycle is shortened to comply with the service life expiration date. When the coverall reaches the service life limit, it shall be returned to supply for disposition.

5-48. PREFLIGHT INSPECTION. The Preflight Inspection shall be performed on the CWU-62/P series coverall by the aircrewmember to whom the coverall is issued prior to each flight. To perform the inspection, inspect the following:

1. Slide fasteners for proper functioning.

2. Seams for loose tape, separation, cuts and tears.

3. Neck and wrist seals for damage and proper bonding to the coverall.

4. Socks for proper attachment to coverall.

5. Assembly for cuts, tears, abrasions and deterioration.

6. If any discrepancies are noted, return coverall to Aircrew Survival Equipment Shop for further inspection.

5-49. POSTFLIGHT INSPECTION. To perform the Postflight Inspection, perform a Preflight Inspection (paragraph 5-48), and proceed as follows:

1. Hang coverall on a wooden hanger, inside out.

2. Allow coverall to air dry in a cool, dry, well ventilated area.

5-50. CWU-62/P AND CWU-62A/P PRE-INITIAL ISSUE INSPECTION.

1. Upon receipt from supply, all CWU-62/P and CWU-62A/P series coveralls shall be water tested in accordance with paragraph 5-57.

2. If excessive leakage is found, the CD/QAR shall determine if repairs shall be completed or the garment shall be considered beyond economical repair.

3. Verify inspection and/or repair and/or fit.

4. Document in accordance with COMNAVAIRFORINST 4790.2.

5-51. PLACE-IN-SERVICE INSPECTION/PROCEDURES. Prior to placing the CWU-62/P series coverall in service, both when issued and when removed from long-term storage, proceed as follows:

NOTE

Although there is no requirement for anti-exposure suits to be inspected at certain times of the year, the best maintenance practices for the suits are to time the inspections of the anti-exposure suits so that the 360-Day Inspection is being done as the suit is taken out of seasonal storage in the fall and the 180-Day Inspection is being done just prior to the suit being placed in seasonal storage in the spring. See paragraph 5-60 for storage requirements and storage clarification.

1. Fit assembly to aircrewmember, using procedures in paragraphs 5-31 thru 5-36.

2. Perform a 360-Day Inspection (paragraph 5-53).

5-52. 180-DAY SPECIAL INSPECTION. The 180-Day Special Inspection shall be performed at the organizational level on all in-service A/P22P-6 Series assemblies. To perform the 180-Day Special Inspection, proceed as follows:

Materials Required

Quantity	Description	Reference Number
As Required	Lubricant Stick	Zipperease NIIN 00-999-7548

1. If required, clean assembly components in accordance with paragraph 5-58.

2. Inspect CWU-62/P series coverall assembly as follows:

a. Place coverall on a flat, clean surface.

b. Inspect surface of coverall, wrist seals, neck seals, and socks for damaged fabric, holes and loose or broken stitching.

NOTE

Absence of cotton flocking does not degrade performance of SRU-25/P socks or neck and wrist seals on the CWU-62/P coverall.

c. Inspect slide fasteners for damaged chain, loose teeth, improper chain alignment, damaged or split end seal blocks, damaged or missing pull tabs (metal and fabric), and loose slide fastener tape.

d. Turn coverall inside out, repeat steps b and c, and inspect seam tapes for looseness or fraying. Check the service life in accordance with paragraph 5-47.

e. Apply a coating of lubricant to slide fasteners using a lubricant stick.

f. Turn coverall right side out. Inspect slide fastener for proper operation. Inspect overall condition of coverall.

g. If repairs are necessary, other than those indicated in note of paragraph 5-45, forward coverall with damage chart (Figure 5-9 or Figure 5-10) detailing discrepancies, to intermediate level maintenance facility for repair and/or further testing.

3. Document inspection in accordance with COMNAVAIRFORINST 4790.2.

5-53. 360-DAY SPECIAL INSPECTION. The 360-Day Inspection shall be performed at the intermediate level on all A/P22P-6 Series assemblies prior to placing in service and every 360 days thereafter. To perform the 360-Day Inspection, proceed as follows:

1. Perform all steps of 180-Day Inspection in accordance with paragraph 5-52.

2. Perform water test or air test on the CWU-62/P series coveralls in accordance with paragraph 5-55 or 5-57.

3. Repair assembly if required in accordance with paragraph 5-61.

4. Document inspection in accordance with COMNAVAIRFORINST 4790.2.

5-54. I-LEVEL AIR AND WATER LEAK TEST SUMMARIZATION AND SCREENING PROCEDURES. Procedures for the leakage test have been modified for the 62/P series coveralls. Previously, the Water Test Device was used exclusively for testing and locating leaks in the coveralls. In order to make testing and repair easier and to provide leakage testing at sea, the procedure is now to use the Air Leak Test Fixture (see paragraph 5-55) to test for leaks first and possibly bypassing the water leak test altogether. The following are general guidelines to follow when screening for leaks. Keep in mind that the object here is to test for, isolate and repair leaks. Facilities without an air test fixture should contact their TYCOM to obtain one.

1. All coveralls should be leak tested with the air test fixture first in accordance with paragraph 5-55. If the coveralls pass the air leak test, then the coveralls are RFI and there is no need for further leak testing.

a. Shore Based Leak Test Screening:

(1) If coveralls fail the air leak test, and the location of the leaks cannot be immediately determined by feeling for escaping air or by detecting bubbles with the use of a soapy solution then the location of the leak or leaks shall be isolated with the Water Test Device in accordance with paragraph 5-56.

(2) Once repairs have been completed the repairs shall be verified with either the Air Leak Test Fixture or the Water Test Device. Continue leakage isolation and repair process until coveralls pass either the air or water leakage test and are deemed RFI.

b. Deployed Units Leak Test Screening:

(1) If coveralls fail the air leak testing an attempt shall be made to identify the location of the leak or leaks by feeling for escaping air or detecting bubbles by using a soapy solution to isolate the leaks. If location of leaks can be determined, the coveralls shall be repaired and the repairs verified with the Air Leak Test Fixture. Continue this process until either the coverall passes the Air Leak Test and can be returned as RFI or it is determined that the locations of the leaks cannot be located without use of the Water Test Device.

(2) Coveralls that fail the Air Leak Test and cannot be repaired shall be forwarded to a shore-based I-Level for testing of the location of the leak(s) by the Water Test Device.

5-55. I-LEVEL AIR LEAK TEST PROCEDURES. To perform the air leak test proceed as follows:

Materials Required

Quantity	Description	Reference Number
1	Lubricant Stick zipperease	00-000-7548 or equivalent
1	Wrench, 5/16 inch	commercially available
1	Bottle, Applicator, screw cap with dispensing spout, plastic, 28 oz capacity	8125-00-488-7952 or equivalent
As Required	Clamps, wrist seal and/or neck seal	Supplied with water test device
As Required	Dishwashing Liquid	7930-LH-000-1971 or commercially available
1	Leak Test Fixture (Procured through TYCOM)	1936AS100-1

1. Prepare soapy solution by mixing 1/2-ounce dishwashing liquid to 16 oz of water in spray bottle. Shake contents until foam appears in spray bottle. A large sponge dipped into a basin of soapy water (1/2 oz to one gallon of water) can also be used as a method of finding leaks.

2. Lubricate main body and convenience slide fasteners with zipper ease. Turn coverall inside out. Close all slide fasteners and ensure sliders are tight against top stops. Close chest fastener tight against top stop by reaching through the neck seal.

3. Loosen the locking nut of the test fixture assembly so that the upper plate can be raised approximately 3 inches above the lower plate.

4. Place the test fixture inside the coverall at the center of the neck seal opening, so the lower plate rests on the inside back of coverall.

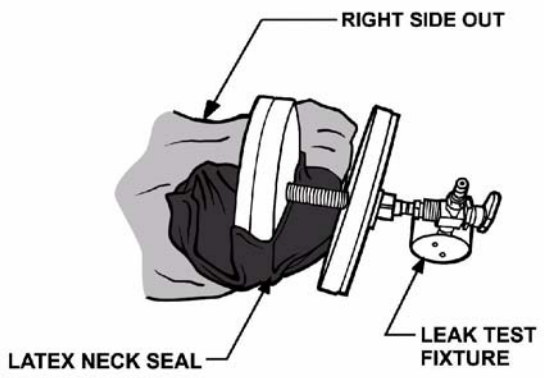

Step 4 - Para 5-55

5. Sandwich the latex neck seal between the upper and lower plates. Avoid creasing or pleating the latex.

6. Tighten the locking nut finger-tight to compress the neck seal flat between the upper and lower plates. Tighten with a wrench 1/2 turn more.

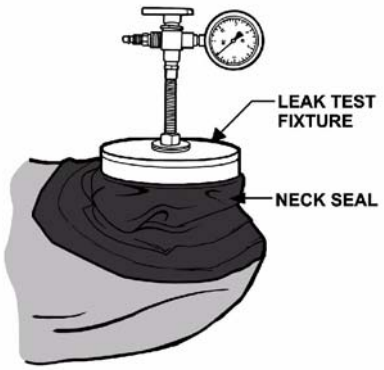

Step 6 - Para 5-55

7. Fold wrist seals twice, and clamp with wrist seal clamps.

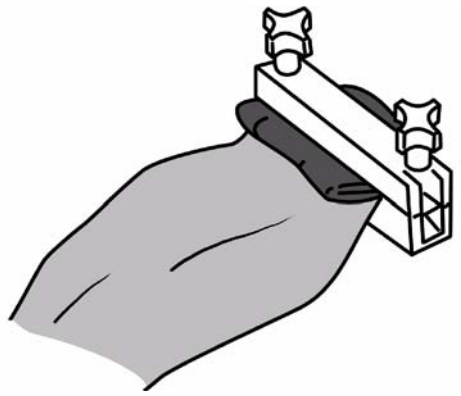

Step 7 - Para 5-55

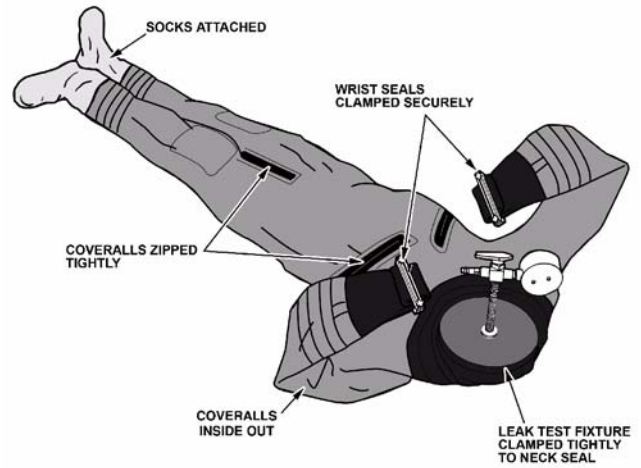

Step 7a - Para 5-55

CAUTION

Ensure pointer on 3-way valve is pointing toward gage when connecting air source.

NOTE

It is recommended that the coverall be filled and deflated three times to allow the air temperature inside the coverall to stabilize. The air temperature will be cold coming out of the compressor and will give a false negative reading (a pressure loss) until it comes to room temperature.

8. Connect a dry, filtered, clean low-pressure air source to the test fixture at the male quick disconnect fitting. Slowly rotate the black pointer on the 3-way valve toward the air inlet and slowly inflate the coveralls to 7.5 inches of water. If you go beyond the 7.5 inches of water pressure rotate the black pointer to the bleed hole in the 3-way valve to bleed excessive pressure down to 7.5 inches of water. Leave pointer facing gage and observe gage for pressure drop. If gage pressure has dropped, ensure the nut on the top plate is secure and not leaking and the wrist seal clamps are secure and not leaking. If pressure continues to drop, apply soapy solution around the outer edge of the upper plate assembly and the latex neck seal. If bubbles form, indicating that a leak is present, deflate coverall and repeat steps 5 through 8. If all clamps are secure and not leaking but the coverall cannot be stabilized at 7.5 inches of water then there is probably a catastrophic leak in the coveralls; the leak needs to be identified and repaired before proceeding with the air test; proceed to step 10. If water pressure is stabilized; proceed to step 9.

9. When confident that a good seal between test fixture and suit is made, and that pressure has been stabilized at 7.5 inches of water pressure, turn off airflow to the coverall by turning the black pointer on 3-way valve towards gage. Leave coverall at pressure for 5 minutes. If pressure drop is less than 1 inch of water pressure after the 5 minute test period the suit is RFI; continue to step 17. If pressure drop is greater than 1 inch of water continue to step 10.

10. If pressure reading drops more than 1 inch of water pressure during the 5 minute test period, visually inspect the coverall for the damaged area. Should the damaged area not be detected, re-inflate the coverall with a continuous airflow pressure of 7.5 inches of water pressure.

NOTE

When step 10 states that if pressure drop is indicated set coverall aside for isolation of leaks by water test it is not implying that obvious and easily detected leaks found during the air leak test cannot first be repaired in accordance with the appropriate repair sections and the coverall air tested again. Step 10 is simply attempting to avoid wasting valuable time and effort trying to locate a pin sized leak with the soapy solution.

11. Using the palm of your hand, cover the complete surface of the suit until the damaged area is detected. Mark damaged area and deflate the suit and repair in accordance with Paragraph 5-61.

12. If no damage can be detected in Steps 10 or 11 then using a sponge cover the suit with a soapy water starting at the neck working your way down to the feet ensuring that the front of the suit is completely covered.

CAUTION

Do not leave suit inflated and covered in soap solution for longer than 5 minutes.

13. Check complete front of suit for any leaks using your waterproof pen, mark any leaks found on the suit (leaks will show as continuous bubbling forming on the suit surface).

14. Once all leaks are recorded, dry the suit using a towel.

15. Turn suit over and repeat test process on the back of the suit.

16. On completion of the test check that all leaks are clearly marked on the suit.

17. Switch off compressor, disconnect air source. rotate pointer toward air inlet and loosen nut to dump pressure. remove air line, wrist clamps and faceplate assembly.

18. Rotate pointer arrow toward gage to return gage reading to zero.

19. If coveralls fail the air leak test and the location of the leaks cannot be immediately determined by feeling for escaping air or by detecting bubbles with the use of a soapy solution then the location of the leak or leaks shall be isolated with the water test device in accordance with Paragraph 5-56.

20. Allow suit to dry.

21. Repair if required in accordance with Paragraph 5-61.

22. Any suit repaired for leakage must be retested in accordance with Steps 1 through 24.

23. Verify repairs.

24. Document inspection in accordance with COMNAVAIRFORINST 4790.2.

5-56. WATER TEST DEVICE.

WARNING

Prior to conducting water test the Aircrew Survival Equipmentman must be familiar with the water test device operating procedures in NAVAIR 17-15GB-504.

NOTE

Replacement water pumps, annotated in the 17-15GB-504, are no longer available. To replace a failed water pump, use 4320-01-384-0773 as a suitable substitute.

5-57. WATER TEST. The water test is a two-person operation. To perform the water test, proceed as follows:

NOTE

Water Testing criteria for the CWU-62/P Series Coveralls shall be: One (1) drop of water falling from the underside of the coverall in 10 seconds or less shall be repaired.

Materials Required

Quantity	Description	Reference Number
1	Water Test Device	MIL-W-85635
As Required	Bleach, Laundry (Powder or Liquid)	A-A-1427 NIIN 00-598-7316 or commercial
1	Pencil, China Marking	SS-P-196
1	Chalk	SS-C-266
2	Wrist Clamp	Supplied with Water Test Device (See Note)
1	Neck Clamp	Supplied with Water Test Device (See Note)
As Required	Fastener Tape, Hook, Type II, Class 1, 2 Inches Wide	MIL-F-21840 NIIN 00-450-9837 NIIN 00-926-4931 NIIN 00-405-2267
As Required	Fastener Tape, Pile, Type II, Class 1, 2-Inches Wide	MIL-F-21840 NIIN 00-405-2265 NIIN 00-498-6631 NIIN 00-926-4930
As Required	Rag, Wiping	A-A-2522 NIIN 00-205-1711 or equivalent

Note: An alternate neck/wrist seal clamp may be fabricated locally in accordance with paragraph 5-458.

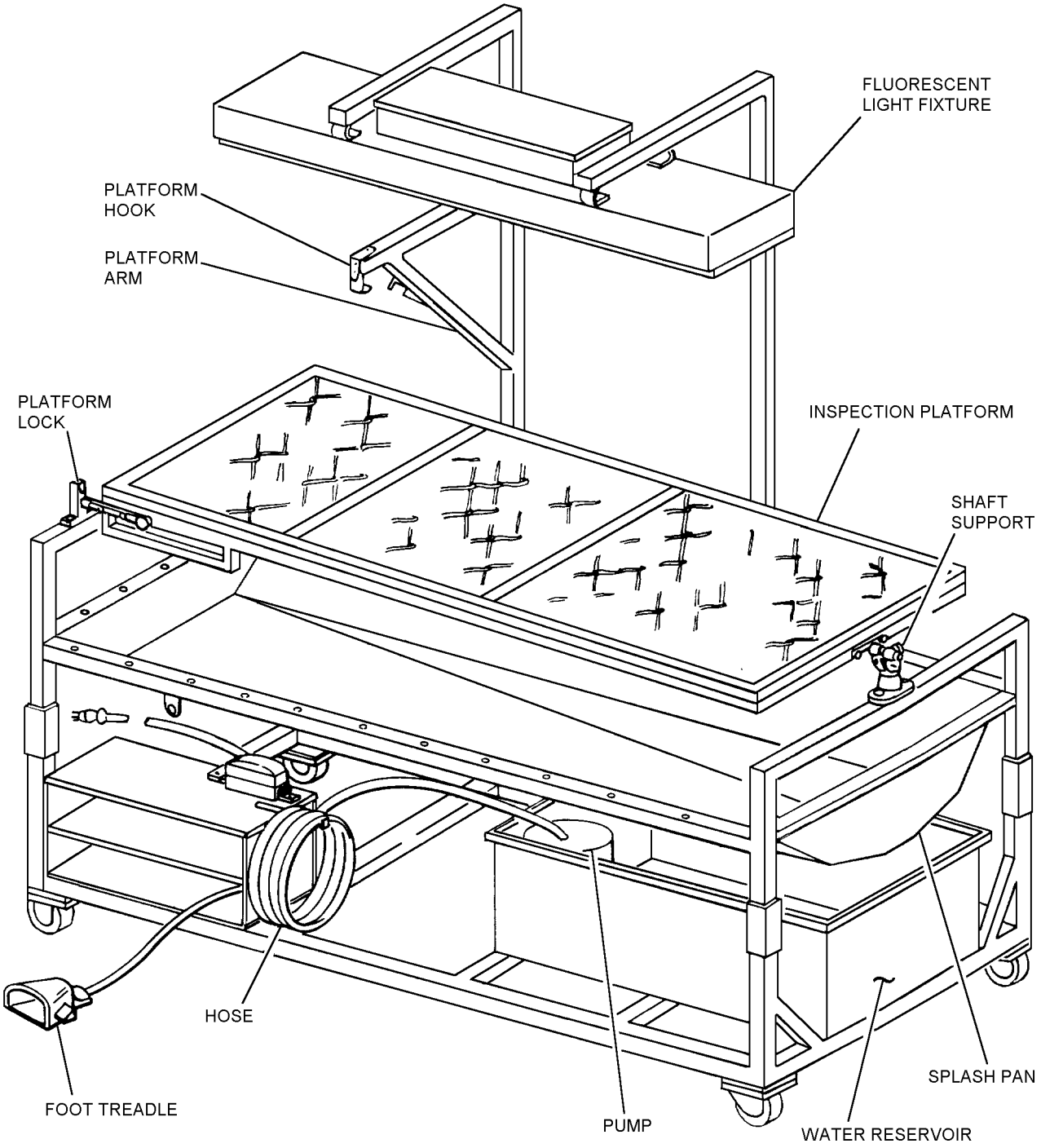

5-13

Figure 5-12. Water Test Device

1. Ensure water test device (Figure 5-12) is ready for operation by checking the following:

a. Fill water reservoir to fill line with (approximately 30 to 35 gallons) clean, fresh water.

CAUTION

Do not exceed 1/4 cup of bleach for each water reservoir full of water. Reservoir shall be drained and water replaced at least monthly or more often if water becomes dirty, slimy, or stagnant. Do not test OTS-600 drysuits with chlorine bleach added to the water as they gray outer layer is vulnerable to bleach. As an alternative to chlorine bleach, which degrades the material of the OTS-600, the use of commercial non-chlorine bleach is authorized for all drysuits including the OTS-600.

NOTE

Clean fresh water or non-chlorine bleach shall be used when testing OTS-600 drysuits. Non-chlorine bleach can be used as an alternative to chlorine bleach with all other drysuits.

b. One-quarter cup of chlorine or non-chlorine bleach (see note step 1.a.) shall be mixed with water at initial filling and at each subsequent refilling of reservoir when testing 62/P series drysuits.

NOTE

Due to the unique construction of the OTS-600, the suit is not turned inside out for testing. The external grey knit face of the suit is where any repair patches will be affixed to.

c. Ensure hose is connected to pump.

d. Ensure electrical cord is connected to a three-prong grounded outlet, 115V, 60-Hz power source.

NOTE

Water test device is equipped with a ground fault interrupter that will turn electrical power off in the event that electrical circuit is not properly grounded.

2. Lock inspection platform in horizontal position with upper platform open as shown in Figure 5-13.

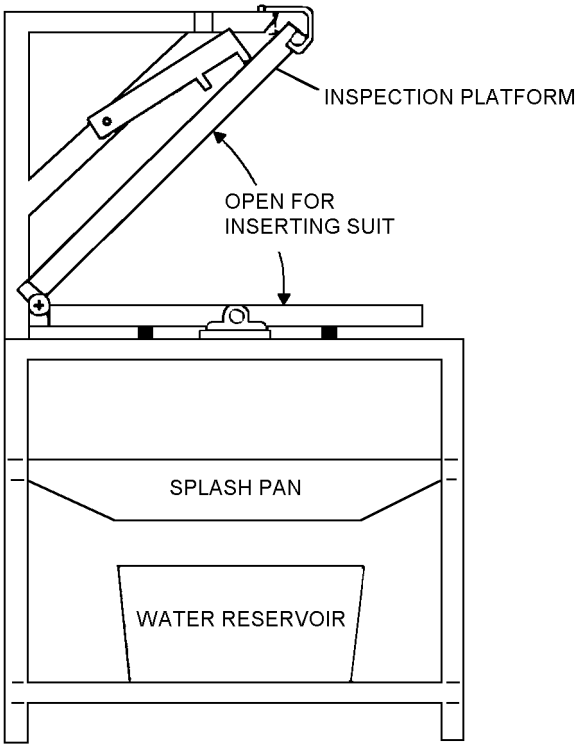

Figure 5-13. Water Test Device (End View)

CAUTION

Prior to beginning test, remove watches, rings, and any other sharp objects. Care should be taken while placing coverall into inspection platform so that nothing catches the coverall that might cause punctures or tears to the material. Also, ensure coverall does not get pinched when platform is closed.

3. Turn coverall to be inspected inside out (do not turn the OTS-600 drysuit inside out, it shall be water tested right side out) and close both slide fasteners. Lay coverall on bottom half of inspection platform, positioning neck opening to left and entrance slide fastener facing up.

4. Close off left wristlet (wristlet closest to platform hinge) and neck opening with clamps provided. Openings should be folded prior to clamping to avoid leakage.

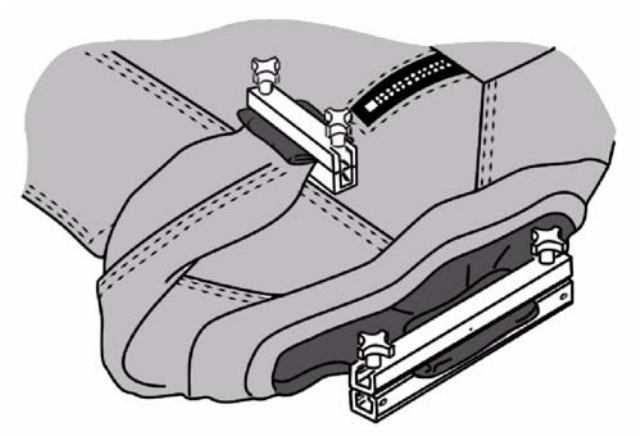

Step 4 - Para 5-57

CAUTION

Ensure that there are no twists or folds and garment is not pinched.

5. Strips of 2-inch pile tape shall be routed through bottom section of inspection platform and loosely around socks above ankle area prior to filling coverall with water to minimize stretching of socks. Secure in place with hook tape.

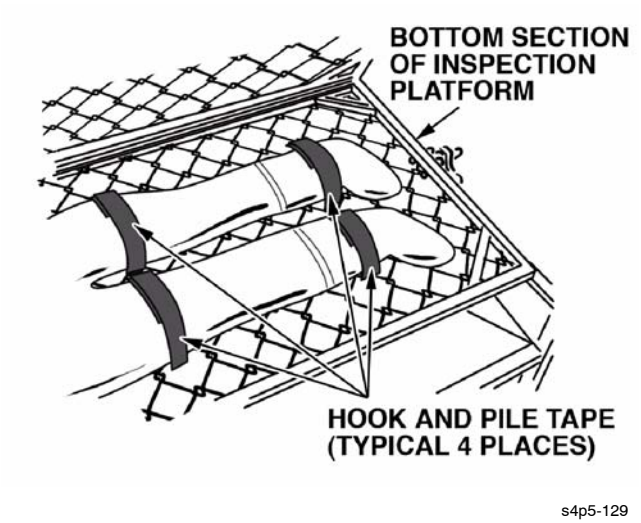

Step 5 - Para 5-57

6. Strips of 2-inch pile tape shall be routed through bottom section of inspection platform and loosely around each thigh, just below crotch, to help separate legs to facilitate visual inspection. Secure in place with hook tape.

7. Extend sleeve of coverall through opening provided in side of inspection platform and close top gate. Secure all four latches.

WARNING

Coveralls must be filled with water as described below. Do not attempt to shortcut filling procedures.

NOTE

Ensure bottom portion of remaining clamp with knobs is in hanger provided in top of fixture prior to filling coverall with water. Place top portion of clamp within easy reach of operator. Water test shall be performed in one complete cycle, start to finish, without interruption.

8. Insert two fingers into sleeve opening. Place hose in sleeve.

NOTE

If water does not flow from hose within 5 seconds after operating foot switch, prime pump by switching on and off several times.

9. While holding hose and arm, turn pump on by depressing footswitch and fill coverall to within 6 inches of sleeve opening. Allow trapped air to escape through sleeve opening while filling.

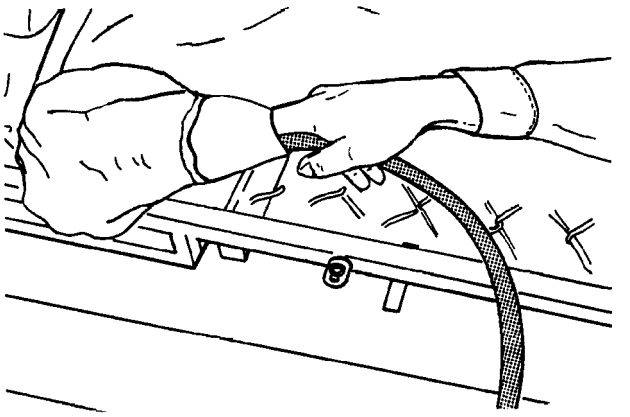

Step 9 - Para 5-57

10. Turn pump off. Remove hose. Gently rock the coverall back and forth in the test stand to dislodge any stray air pockets that may be inside the suit. Close sleeve opening with clamp.

CAUTION

Do not mark coverall with ballpoint pen or lead pencil.

11. While the inspection platform is in the horizontal position, inspect back of the coverall for leaks, including areas under the thigh and ankle securing tapes by temporarily loosening the hook and pile closures. Where water appears on coverall surface, blot area dry with an absorbent material (paper towel, etc). If one (1) drop of water falls from the underside of the coveralls in 10 seconds or less, the coverall shall be repaired. Mark suspect area for patching using only china marking pencil or tailor's chalk.

NOTE

Assistance may be required to hold the platform in position during step 12. Ensure that securing tapes at thighs and ankles are closed prior to rotating platform.

12. Rotate the inspection platform 180° and inspect the front of the coverall and slide fastener box stitching near seal block for any water leakage. If water appears, mark area for repair. Inspect and mark leak areas in accordance with step 11 procedures.

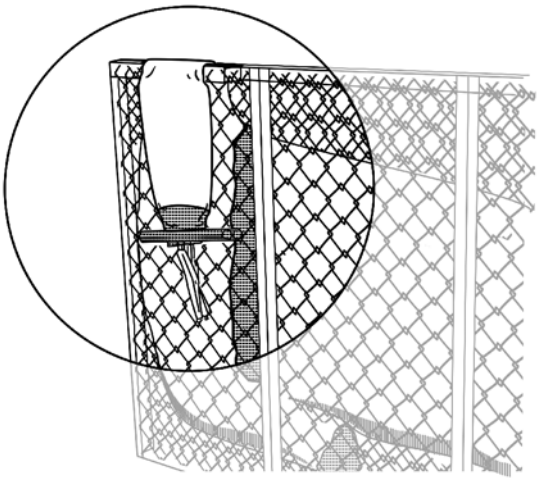

Step 12 - Para 5-57

13. Rotate the inspection platform back to the horizontal (front facing upward) and lock in place. The coverall should be firm to the touch, (step 13) like a well-defined helium balloon, not gelatinous or wobbly like an under inflated helium balloon, (step 13A).

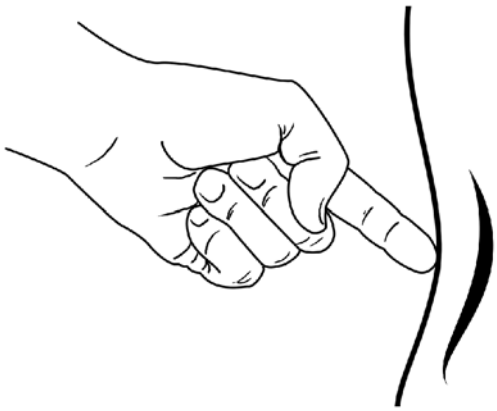

Step 13 - Para 5-57

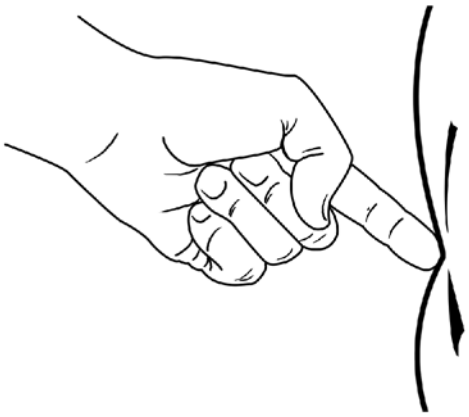

Step 13A - Para 5-57

NOTE

Because of all the different sizes and modifications authorized on the coveralls it is impractical to try to give accurate measurements for the amount of water that each coverall should hold in order to be tested. The concept is to get enough water in to the coverall to have the water pressing hard enough against the fabric and seams to uncover any flaws in the material that would cause the coverall to fail it's function; that of keeping an aircrewmember alive until rescue personnel can locate them.

14. While the inspection platform is in the horizontal position (front of coverall facing upwards), inspect back of the coverall (underside) for leaks, including areas under the thigh and ankle securing fastener tapes by temporarily loosening the hook and pile closures. Where water appears on coverall surface, blot area dry with an absorbent material (paper towel, etc.). If one (1) drop of water falls from the underside of the coveralls in 10 seconds or less, the coverall shall be repaired. Mark suspect area for patching using only china marking pencil or tailor's chalk.

NOTE

All four sides of the coverall will be inspected in steps 14 through 17. Always push the platform up and away from you, 45° at a time so that each of the four steps completes the entire coverall.

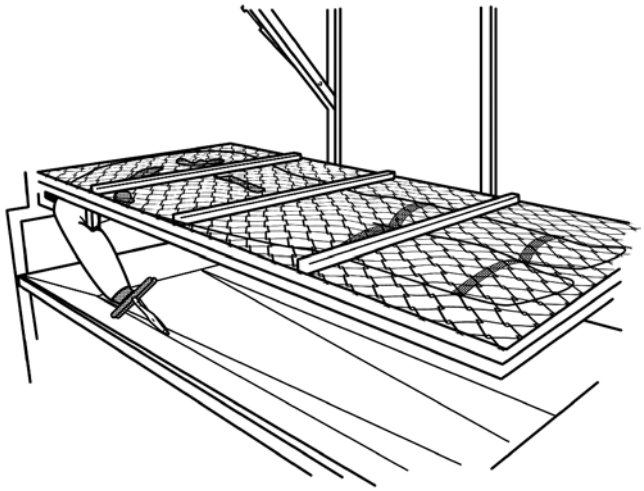

Step 14 - Para 5-57

15. Rotate the platform 45° to the vertical position; lock in place with the platform arm hook. Inspect the portion of the coverall closest to the splash pan. Where water appears on coverall surface, blot area dry with an absorbent material (paper towel, etc.). If one (1) drop of water falls from the underside of the coverall in 10 seconds or less, the coverall shall be repaired. Mark suspect area for patching using only china marking pencil or tailor's chalk.

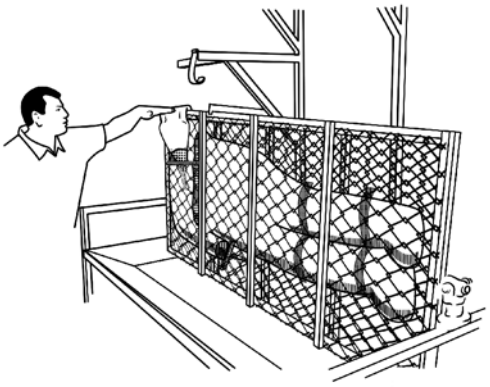

Step 15 - Para 5-57

16. Rotate the platform 45° to the horizontal position again so that the front of the suit is at the bottom closest to the splash pan. Inspect the front of the coverall and slide fastener box stitching near seal block for any water leakage. Where water appears on coverall surface, blot area dry with an absorbent material (paper towel, etc.). If one (1) drop of water falls from the underside of the coverall in 10 seconds or less, the coverall shall be repaired. Mark suspect area for patching using only china marking pencil or tailor's chalk.

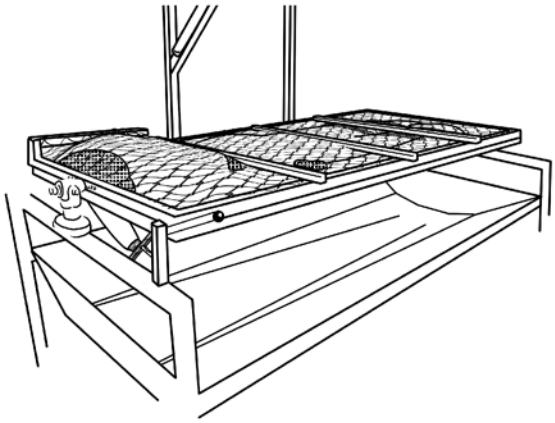

Step 16 - Para 5-57

17. Rotate the platform 45° to the vertical and lock inplace with the platform arm hook so that the sleeve with the arm clamp is resting in the bottom of the splash pan. Inspect the final portion of the coverall closest to the splash pan. Where water appears on coverall surface, blot area dry with an absorbent material (paper towel, etc.). If one (1) drop of water falls from the underside of the coveralls in 10 seconds or less, the coverall shall be repaired. Mark suspect area for patching using only china marking pencil or tailor's chalk.

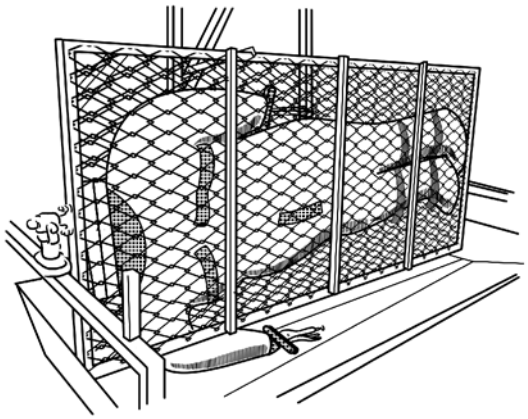

Step 17 - Para 5-57

18. To drain the water from the coverall, release the platform arm hook and rotate the platform up and past the horizontal position (this will get as much pressure off the sleeve opening as possible). While holding the platform in position with one hand grasp the sleeve opening firmly closed with other hand have an assistant slowly release the arm clamp. Slowly allow the sleeve to open and water to drain out into the splash pan.

NOTE

When the clamp is first released, water will gush out of the coveralls and all over the floor unless the sleeve opening is held firmly closed. When the clamp is released and opened gradually allowing only a small amount of water to escape at a time.

Assistance may be required to hold the platform in place, release the clamp and hold the sleeve closed all at the same time.

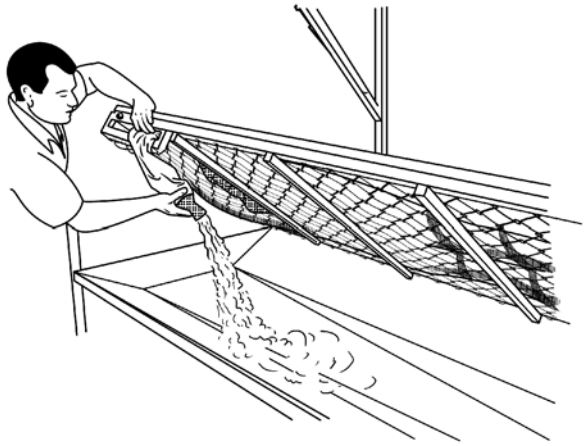

Step 18 - Para 5-57

19. Slowly rotate the platform downwards as the water continues to drain from the coverall.

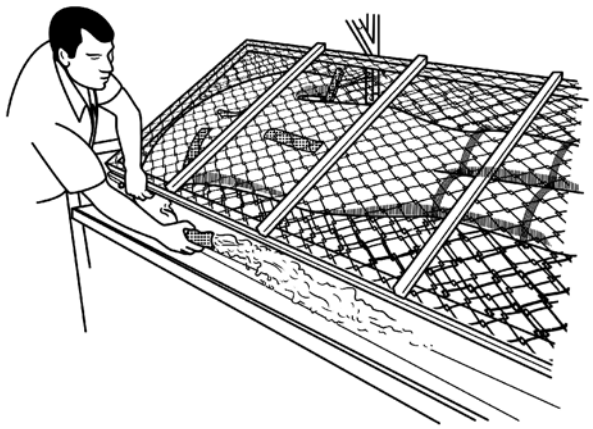

Step 19 - Para 5-57

20. Lock the platform in the vertical position and let the coverall drain as completely as possible.

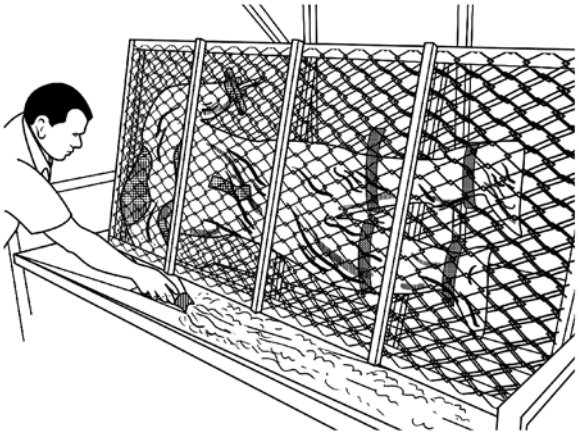

Step 20 - Para 5-57

21. Rotate the platform back to the original horizontal position and lock in place.

22. Open inspection platform, remove hook and pile tape used to secure thighs and ankles, remove clamps, and drain any remaining water.

23. Open entrance slide fastener and turn coverall right side out.

NOTE

When patching of the coverall is required, drying of the defective area of the CWU-62/P can be accomplished by subjecting the area to low-pressure air or by a five second application of the MIL-S-85634 seam and patch heat sealing machine. When drying the full garment in clothes dryer, place the garment in a locally fabricated mesh bag to minimize possible abrasion. An appropriate mesh material can be purchased from: Sterling Net and Twine Co., Inc., 18 Label Street, Montclair, NJ 04042. Phone (201) 783-9800.

24. With slide fasteners open, dry coverall in a clothes dryer set at its lowest temperature setting for 20 minutes, or hang coverall on wooden or plastic hanger and allow to air dry. After hanging for a maximum of 4 hours, check coverall for dryness. If water has collected inside anti-exposure socks, pull socks out through entrance opening and allow to dry.

5-58. CLEANING.

NOTE

Refer to Sections 3-35 and 3-37 for cleaning mittens and hood.

5-59. CLEANING AND TREATMENT OF CWU-62/P SERIES AND CWU-79/P COVERALLS. For cleaning and treatment of coveralls proceed as follows:

Materials Required

Quantity	Description	Reference Number
As Required	Detergent, General Purpose	MIL-D-16791 NIIN 00-282-9699 or Equivalent or Commercial*
As Required	Trichloroethylene	O-T-634

*Cold Power, low sudsing powdered detergent, or equivalent, recommended for cold water.

CAUTION

Ensure that slide fasteners are closed prior to laundering/cleaning. Do not dry-clean coveralls. Do not use bleaches or similar additives for cleaning. Do not use commercial laundry facilities. Trichloroethylene shall be used, for spot cleaning only.

1. Spots and areas suspected of having been in contact with acid compounds, grease, oil, etc, shall be swabbed with trichloroethylene.

2. Close slide fastener. Hand launder or use an automatic washer that has a delicate cycle. Ensure water used is cold. Follow detergent manufacturer's recommendations for amount of detergent to use. Wash cycle shall not exceed 3 minutes.

3. Rinse garment three times. Use clean, fresh water for each rinse. Each rinse cycle shall be a minimum of 1 minute.

4. Applying a water repellent finish. Anti-Exposure Coveralls and some of the MCPS garments can have their waterproof properties restored with commercially available products Granger's Spray-On Waterproofing, or ReviveX-Water Repellent for outerwear. Products are available open purchase at www.Campmor.com, Telephone toll free 1-800-525-4784. To restore the waterproof properties by cleaning and treating proceed as follows:

a. Granger's Spray-on Waterproofing for Synthetic Fabrics or ReviveX-Water Repellent for outerwear.

b. Machine wash: Follow garment manufacturer's care label. Fasten all hook and pile fasteners, buckles and slide fasteners. G-Wash performs well in all water temperatures. Shake bottle and proceed as follows:

c. Spray. Place damp garment on hanger. Shake bottle. Hold 7 inches from garment and evenly spray exterior with Granger's Spray-on Waterproofing for Synthetic Fabrics.

d. Dry. Tumble dry for 30-60 minutes on a low or medium heat setting. The treatment is heat activated so tumble drying or ironing is essential for good performance.

NOTE

Coveralls may be dried in a clothes dryer, using lowest heat setting, for 20 minutes. Recommend garment be placed in a locally fabricated mesh bag to minimize potential abrasive wear. Appropriate mesh material can be purchased from: Sterling Net and Twine Co., Inc., 18 Label Street, Montclair, NJ 04042. Phone: (201) 783-9800.

5. Hang coverall by shoulders on a wooden or plastic hanger in a well-ventilated area until dry, or tumble dry with low heat.

6. When outside is dry, turn legs and socks inside out to dry.

7. Verify inspection and/or repair and/or fit.

8. Document in accordance with COMNAVAIRFORINST 4790.2.

5-60. STORAGE. To store the anti-exposure coveralls/assemblies, proceed as follows:

CAUTION

The coveralls should be stored in a cool, dark place as prolonged exposure to the sun's ultra-violet rays or other sources of ozone will degrade the adhesives and all types of rubber. Keep coveralls away from gasoline, oil and other petroleum products as they dissolve adhesives.

Do not insert hanger through neck seal opening when preparing coveralls for short term storage. Ends of hanger could puncture and damage the neck seal. Insert hanger through entry zipper and push hanger head from below through the neck seal opening.

1. Short-Term Storage. Between flights, coverall shall be hung on a plastic or wooden hanger or folded in accordance with Figure 5-14, and stored in a clean and well ventilated protected area.

2. Seasonal Storage. Storage during the warmer months when anti-exposure protection is not required for flight. Coveralls in Seasonal Storage shall be maintained on their normal 180/360-day inspection cycles and do not require a Place-In-Service Inspection upon removal from seasonal storage. Seasonal storage does not require documentation as "Seasonal Storage".

3. Long-Term Storage. Coveralls being stored rather than being maintained on a 180/360-day inspection cycle (for whatever reason) shall be considered in Long-Term Storage. A coverall that has gone beyond its 180 or 360-Day Inspection shall be considered out of service and in Long-Term Storage and must be documented as such in accordance with COMNAVAIRFORINST 4790.2. Coveralls being removed from Long-Term Storage shall have a complete Place-In-Service Inspection completed and documented in accordance with paragraph 5-51.

4. CWU-79/P and CWU-83/P Anti-Exposure suits that are kept on the 360-day inspection cycle and put away during the warmer months are not considered in Long-Term Storage with regard to inspection criteria. Rather the suits are considered in Seasonal Storage. There is no requirement to do an additional Place-In-Service, 360-Day Inspection on suits being taken out of seasonal storage as long as the suit has been maintained on the required 360-day inspection cycle.

NOTE

Although there is no requirement for anti-exposure suits to be inspected at certain times of the year, the best maintenance practice for the suit is to time the cycle of inspections so that the 360-Day Inspection is being done as the suit is taken out of seasonal storage in the fall and the 180-Day Inspection (if required) is being done just prior to the suit being placed in to seasonal storage in the spring.

5. The mittens/gloves, hood and liner of the A/P22P-6 Series assemblies shall be placed with the coveralls during periods of storage. The CWU-43/P drawers (or equivalent) and the CWU-44/P (or equivalent) shall be retained by the individual aircrewmember and not put into storage.

6. Ensure that coveralls are clean and completely dry.

7. Lubricate slide fasteners and leave slide fasteners completely open during storage.

8. Fold coveralls in accordance with Figure 5-14. Place coveralls in individual plastic bags and clearly label with aircrewmember's name and organization.

9. Loosely pack bagged coveralls in a cruise box or other appropriate storage container.

10. Store closed containers in a cool dry area.

5-61. REPAIRS AND FABRICATIONS.

5-62. Instructions for performing repairs or replacement of components of the A/P22P-17 or the A/P22P-6 Series assemblies in Ready For Issue (RFI) condition can be found in the following paragraphs. Repairs and fabrications of the coveralls shall include, but are not limited to, those listed in Table 5-7. All repairs to anti-exposure coveralls shall be followed by an air or leak test. Deployed activities who have an emergency situation where mission readiness would be impacted by not being able to repair and RFI an individuals anti-exposure coverall as per this manual can perform the required repairs in accordance with applicable paragraphs, inspect repaired coveralls in accordance with paragraph 5-63 and conditionally RFI the coveralls. The authorization of these emergency procedures is not intended to act as a catch all loop hole; they are

to be used solely for emergencies that impact mission readiness. All coveralls conditionally RFI'd in the above manner shall be leak tested immediately when facilities are available to perform the leakage test. CWU-79/P Neck and Wrist Seal pinholes can be repaired using Aqua Seal following manufacturer's instructions.

CAUTION

Do not apply adhesive to coverall fabric except where specified.

NOTE

Refer to Chapter 3 for authorized repairs of HGU-32/P Hood, HAU-12/P Mittens, MCP under garments and the CWU-43/P and CWU-44/P under garments.

All stitching shall be in accordance with ASTM-D-6193, Type 301 lockstitch 7 to 10 stitches per inch. Backstitch all ends not less than 3/4-inch.

5-63. EMERGENCY REPAIR INSPECTION PROCEDURES. (See paragraph 5-62 for guidance). After repair and/or patching coverall, perform visual inspection as follows:

WARNING

The following procedure is only to be used by deployed units when air testing and water testing is not available. Extreme attention to detail must be followed to prevent injury to personnel assigned the CWU-62 Series or CWU-79/P Anti-Exposure Coverall.

1. Sewing for loose/missing stitches.

2. Heat seal tape for loose ends and edges for separation of tape from coverall.

3. Slide fasteners for proper functioning.

4. All seams for loose tape, separation, cuts, and tears.

5. Neck and wrist seals for damage and proper bonding to the coverall.

6. Socks for proper attachment to coverall.

7. Assembly for cuts, tears, abrasions, and deterioration.

NOTE

Completion of inspection shall Conditionally RFI the coverall until returning to a shore based Intermediate Maintenance Level Activity.

8. Document maintenance actions in accordance with COMNAVAIRFORINST 4790.2.

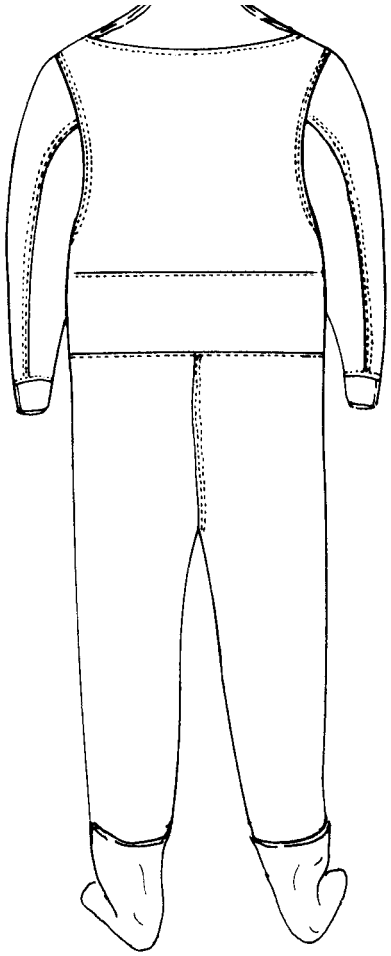

STEP 1

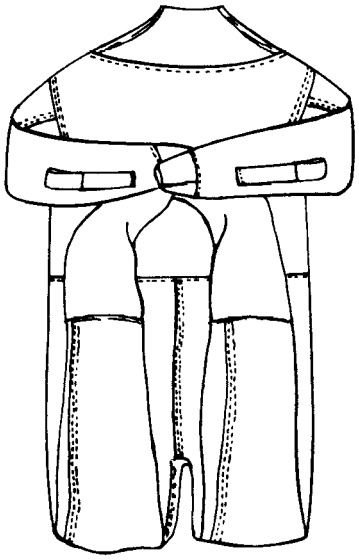

STEP 2

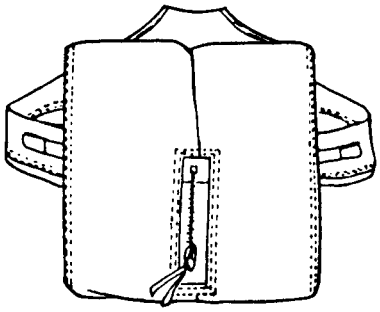

STEP 3

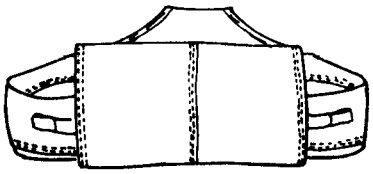

STEP 4

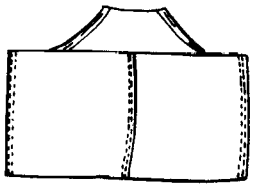

STEP 5

5-15

Figure 5-14. Folding Procedures for the CWU-62/P Series Coveralls

Table 5-7. Repairs and Fabrications

Component	Discrepancy	Repair Authorized	Reference/Note
CWU-62/P Series or CWU-79/P Series or ARSD Series or MSD 560 Series or CWU-83/P or OTS-600	Patching and Reinforcement Limitations	Yes	Para 5-89 (Note 5/6)
	Porous fabric:		(Note 1)
	Small: Less than 1-inch diameter circle	Yes	Para 5-68 (Note 5)
	Large: Less than 7 inches by 7 inches	Yes	Para 5-71 (Note 6)
	Hole:		(Note 2)
	Small: Pinhole; less than 1/16-inch diameter	Yes	Para 5-68 (Note 5)
	Large: Less than 3-inch diameter	Yes	Para 5-70 (Note 6)
	Tear:		(Note 3)
	Small: Up to 1 inch long w/1/2-inch long cross cut.	Yes	Para 5-68 (Note 5)
	Large: Less than 7 inches in length with 1/2-inch long cross-wise cut(s)	Yes	Para 5-69 (Note 6)
	Rip:		(Note 4)
	Small: Up to 1 inch long.	Yes	Para 5-68 (Note 5)
	Large: Less than 10 inches in length	Yes	Para 5-69 (Note 6)
	Hole, Tear or Rip continuing through a seam	No	
	Replacement of slide fasteners	Yes	Para 5-65
	Repair of slide fastener	Yes	Para 5-64
	Repair of water seepage at box stitching	Yes	Para 5-66
	Thumb loop replacement	Yes	Para 5-67
	Loose Construction Seam Tape Replacement	Yes	Para 5-72
	Replacement of wrist seals (CWU-62/P Series)	Yes	Para 5-76
	Replacement of wrist seals (CWU-79/P Series)	Yes	Para 5-349
	Replacement of wrist seals (ARSD)	Yes	Section 5-5
	Replacement of neck seals (CWU-62/P Series)	Yes	Para 5-83
	Replacement of neck seals (CWU-79/P Series)	Yes	Para 5-348
	Replacement of neck seal (ARSD)	No	(Note 7)
	Replacement of Exhaust Valve (ARSD)	Yes	Section 5-5
	Replacement of loose or missing hook/pile tape (ARSD)	Yes	Section 5-5
	Replacement of loose or missing reflective tape (ARSD)	Yes	Section 5-5
	Replacement of Chest Pad (ARSD)	Yes	Section 5-5
Anti-Exposure Sock	Porous Fabric: Small ONLY	Yes	Para 5-68 (Note 5)
	Holes: Small (Pinholes) ONLY	Yes	Para 5-68 (Note 5)
	Tear: Small ONLY	Yes	Para 5-68 (Note 5)
	Hole, Tear or rip continuing through a seam	No	
	Repair/Replacement of loose seam tape	Yes	Para 5-73
	Replacement of sock	Yes	Para 5-74
CWU-23/P Liner	Tears, Rips, Holes	Yes	Para 3-198
	Slide Fastener	Yes	Para 3-198
	Replacement of sleeve insert	Yes	Para 3-199
CWU-72/P,	Tears, Rips, Holes	Yes	Para 3-220
	Slide Fastener	No	
	Replacement of hook and pile tape	Yes	Para 3-220

Table 5-7. Repairs and Fabrications (Cont)

Component	Discrepancy	Repair Authorized	Reference/Note
CWU-81/P, or CWU-82/P Liners	Tears, Rips, Holes	Yes	Para 3-241
	Slide Fastener	No	
	Replacement of hook and pile tape	Yes	Para 3-241

Notes:
1. Porous Area. Fabric that is visibly intact yet still leaks. Criteria shall be: If one (1) drop of water falls from the underside of the coveralls in 10 seconds or less the coverall shall be repaired.
2. Hole, round damage; an entire circular or elliptical shape missing from the fabric.
3. Tear; L or I shaped damage; that is a long continuous cut with a short connected perpendicular cut at one or both ends. Tears of 1/2 inch in length or greater in coverall fabric shall be closed with zigzag stitching prior to application of patches.
4. Rip, linear damage; that is, a long continuous cut with no other adjoining cuts. Rips larger than 1/2 inch.
5. Reinforcing: Repairing a small tear, small rip, small hole or small porous area by heat seal tape alone. See paragraph 5-89 for definitions and limitations.
6. Patching: Repairing a tear, rip, or hole by sewing a new piece of fabric or heat seal tape along the perimeters of the damage, then taping those sewn edges. See paragraph 5-89 for definitions and limitations.
7. Neck seal on ARSD must be replaced at either Mustang or Concord in accordance with Section 5-5.
8. Replacement of slide fasteners shall be accomplished at the discretion of the repairing activity.
9. Dimensions and limitations for patching and reinforcing liners is not the same as for the coveralls.

5-64. REPAIR OF SLIDE FASTENERS. To repair any dried adhesive which may have separated from the inside rubber tape portion of the slide fastener, proceed as follows:

Materials Required

Quantity	Description	Reference Number
As Required	Polychloroprene Adhesive (Note 1)	MIL-A-5540 NIIN 00-515-2246
1	Roller, Hand	GGG-R-00620 NIIN 00-243-9401
As Required	Toluene	TT-T-548
As Required	Talc	MIL-T-55036 NIIN 01-080-9589

Notes: 1. Adhesives may come from supply that contain both a base adhesive and an accelerator. Mixing of the accelerator with the base adhesive is not recommended for use on any items requiring adhesive in this manual. Use only the base adhesive.

NOTE

Repairs are required only if water leakage occurs.

1. Remove old seam tape with heat sealer.

2. With dental spatula or appropriate tool, clean adhesive off rubber.

3. Clean area to be repaired with toluene. Wipe with a soft rag. Let cleaned area dry for 20 minutes.

4. Place 2 coats of adhesive on the rubber tape area and on the back portion of the cleaned area of the slide fastener.

NOTE

Ensure that adhesive is getting into the seam area between the dried adhesive and the slide fastener.

5. When tacky, press surfaces together with a roller.

6. After rolling, allow 48 hours to dry. Retest for leaks in accordance with paragraph 5-55 or 5-56. If necessary, repeat procedure.

7. Seam leakage around slide fasteners can be corrected by applying 2 layers of adhesive over the heat seal tape and slide fastener rubber.

a. Mark a 2-inch area from the rubber over the heat seal tape.

b. Apply first layer of adhesive in a right to left application.

c. Apply second layer of adhesive in an up and down application. Let dry.

d. Apply a light coat of talc over the adhesive area when completely dry and retest in accordance with paragraph 5-55 or 5-56.

8. Verify inspection and/or repair and/or fit.

9. Document in accordance with COMNAVAIRFORINST 4790.2.

5-65. REPLACEMENT OF SLIDE FASTENER. To replace entrance or relief portal slide fastener, proceed as follows:

Materials Required

Quantity	Description	Reference Number
As Required	Tape, Seam, 1 1/2-Inch	NIIN 01-193-0469
	-or-	
	Tape, Seam, 7/8-Inch	NIIN 01-189-6361
As Required	Thread, Nylon, High Temperature Resistant	MIL-T-83193 NIIN 00-130-6245
As Required	Polychloroprene Adhesive (Note 1)	MIL-A-5540 NIIN 00-515-2246
1	Roller, Hand	GGG-R-00620 NIIN 00-243-9401
1	Pencil, China Marking	SS-P-196
1	Spatula, Dental	No. 324 NIIN 00-556-8000 or equivalent
As Required	Toluene	TT-T-548

Notes: 1. Adhesives may come from supply that contain both a base adhesive and an accelerator. Mixing of the accelerator with the base adhesive is not recommended for use on any items requiring adhesive in this manual. Use only the base adhesive.

1. Prior to removing defective slide fastener, make alignment marks on coverall and slide fastener using a China marking pencil. Marks should be made at 1/4, 1/2 and 3/4 length sections of slide fastener.

2. To remove existing slide fastener from coverall, cut stitching being careful not to nick or damage fabric. Peel cloth layer of heat seal tape off. Remove any remaining stitches or threads from the area around the slide fastener.

CAUTION

Use care when scraping off adhesive to avoid damaging the fabric.

3. Apply heat, using heat sealer, to soften remaining adhesive. Gently scrape off as much adhesive as possible using a dental spatula or equivalent.

4. Select correct size slide fastener from Table 5-8. Clean the tapes of the new slide fastener with toluene. Wipe with a soft rag. Let cleaned area dry for five minutes. Transfer alignment marks from the used slide fastener to the new one. Place new slide fastener in the opening left from the previous fastener, making sure to match the alignment marks. Slide fastener may close from right to left or left to right, depending on aircrew preference.

5. Sew one row of stitches (5 to 7 stitches per inch) around opening, stitching through all layers (fabric and slide fastener tape) 1/16 inch from folded edge of fabric, following the pattern left by previous stitching. Sew a second row of stitches 1/8 inch from first row of stitches.

6. On inside, apply two thin coats of adhesive to all four edges of slide fastener tape, covering and extending at least 3/8 inch beyond rows of stitching. Seam tape will not adhere properly to slide fastener tape without the use of adhesive. Allow 15 minutes between each coat. Allow a minimum of 48 hours drying time for adhesive before heat sealing. Let dry completely.

WARNING

Prior to application of seam tape, Aircrew Survival Equipmentman must be familiar with heat sealing machine operating procedures in NAVAIR 17-10DC-1. Refer to paragraph 5-68 for application of seam tape.

NOTE

When applying seam tape, ensure tape and coverall material are not wrinkled or bunched before lowering heat platen. If using 1 1/2-inch seam tape, only one layer of seam tape shall be applied. One and one half inch tape is preferred. If 7/8-inch tape is used, two overlapping layers of seam tape shall be applied.

Table 5-8. Replacement Slide Fasteners

Anti-Exposure Coverall	Coverall Size	Zipper Length (Note 1)	Part Number (Note 2)	NIIN	Cost (each) (Note 3)	
					1 to 5 zippers	6 to 10 zippers
CWU-62/P, 62A/P & 74/P	Relief zipper	6	0720/6 or 1370AS501-5	01-323-8118	$63.20	$57.49
CWU-62/P, 62A/P & 74/P	Relief zipper	8	0720/8		$65.53	$59.61
CWU-62/P, 62A/P & 74/P	1, 2, 3	28	0720/28 or 1370AS501-1	01-323-2385	$88.85	$80.82
CWU-62/P, 62A/P & 74/P	4, 5, 6	30	0720/30 or 1370AS501-2	01-323-2386	$91.18	$82.95
CWU-62/P, 62A/P & 74/P	7, 8, 9	32	0720/32 or 1370AS501-3	01-323-8117	$93.52	$85.07
CWU-62/P, 62A/P & 74/P	10, 11, 12	34	0720/34 or 1370AS501-4	01-323-8118	$95.85	$87.19
CWU-62B/P	Relief zipper	6	0720/6		$63.20	$57.49
CWU-62B/P	1, 2, 3	34	0720/34 or 1370AS501-1	01-323-2385	$95.85	$87.19
CWU-62B/P	4, 5, 6	38	0720/38		$100.51	$91.43
CWU-62B/P	7, 8, 9	42	0720/42		$105.18	$95.68
CWU-62B/P	10, 11, 12	46	0720/46		$109.84	$99.92
CWU-62C/P	Small/Short	36	0720/36		$98.18	$89.31
CWU-62C/P	Small/Regular	38	0720/38		$100.51	$91.43
CWU-62C/P	Small/Long	40	0720/40		$102.85	$93.55
CWU-62C/P	Medium/Short	38	0720/38		$100.51	$91.43
CWU-62C/P	Medium/Regular	40	0720/40		$102.85	$93.55
CWU-62C/P	Medium/Long	42	0720/42		$105.18	$95.68
CWU-62C/P	Large/Short	40	0720/40		$102.85	$93.55
CWU-62C/P	Large/Regular	42	0720/42		$105.18	$95.68
CWU-62C/P	Large/Long	44	0720/44		$107.51	$97.80
CWU-79/P	12	34	0720/34 or 1370AS501-1	01-323-2385	$95.85	$87.19

Notes:
1. Length is measured from zip stop to zip stop (length of teeth).
2. Not all anti-exposure coverall slide fasteners were procured and stocked in the Navy Supply System. To open purchase slide fasteners above that do not have associated part numbers and NIINs (part numbers that begin 0720/ are manufacturer's part numbers) contact YKK inc. via Diversified Marketing Group. Please keep in mind that the individual contact person may change from time to time but the basic contact information is consistent and you will be able to open purchase the slide fasteners in Table 5-8 from the contact information provided. Call Julie A. Murray, Diversified Marketing Group, 109 Forrest Avenue, Narberth, PA 19072. Telephone number: 610-667-5589. Fax number: 610-667-4666. Email: Julie@dmgroup.org.
3. Cost provided is per slide fastener. The price per slide fastener goes down as the number ordered goes up.

7. Apply seam tape in accordance with paragraph 5-68, to inside, keeping stitch lines and edge of slide fastener tape as nearly centered under tape as possible. Tape shall extend at least 1/4 inch beyond stitching and edge of slide fastener tape. Overlap ends of seam tape 1 inch.

8. Ensure that a thong is looped through the slide fastener pull and securely tied using a larkshead knot. Fabricate the thong using 10 1/4 inches of 5/16-inch wide nylon tape, MIL-T-8363, Type 1. The ends of the thong shall be cut on an angle of approximately 60 degrees. Sear ends of thong and allow no sharp edges to be formed.

9. Perform leakage test on coveralls in accordance with paragraph 5-55 or 5-56.

10. Verify inspection and/or repair and/or fit.

11. Document in accordance with COMNAVAIRFORINST 4790.2.

5-66. REPAIR OF WATER SEEPAGE AT BOX STITCHING. To prevent water seepage through the box stitching in the inside rubber tape area of the slide fastener assembly, proceed as follows:

Materials Required

Quantity	Description	Reference Number
As Required	Polychloroprene Adhesive (Note 1)	MIL-A-5540
As Required	Toluene	TT-T-548

Notes: 1. Adhesives may come from supply that contain both a base adhesive and an accelerator. Mixing of the accelerator with the base adhesive is not recommended for use on any items requiring adhesive in this manual. Use only the base adhesive.

1. Clean area with toluene. Wipe with a soft rag. Let dry for 20 minutes.

2. Apply at least 3 coats of adhesive to the box stitching area. Allow at least 15 minutes of drying time between each coat.

3. Allow 48 hours to dry. Retest for leaks in accordance with paragraph 5-55 or 5-56. If necessary, repeat procedure.

4. Verify inspection and/or repair and/or fit.

5. Document in accordance with COMNAVAIRFORINST 4790.2.

5-67. THUMB LOOP REPLACEMENT. To replace worn or damaged thumb loops, proceed as follows:

Materials Required

Quantity	Description	Reference Number
As Required	Fastener Tape, Hook, Type I, Class 1, 1-Inch Width, Sage Green	MIL-F-21840 NIIN 00-405-2266
As Required	Fastener Tape, Pile, Class 1, 1-Inch Width, Sage Green	MIL-F-21840 NIIN 00-405-2263
As Required	Thread, Nylon, High Temperature Resistant Sage Green	MIL-T-83193 NIIN 00-130-6245
	-or-	
	Thread, Nylon, Type II Size E, Sage Green	V-T-295 NIIN 00-204-3884
As Required	Seam Tape, 1 1/2-Inch	NIIN 01-193-0469
	-or-	
	Seam Tape, 7/8-Inch	NIIN 01-189-6361

1. Remove damaged thumb loop fastener tapes from sleeve, being careful not to damage coverall fabric.

2. Cut 6-inch length of hook fastener tape. Position hook tape on sleeve, using original stitching lines as a guide. Attach hook tape to sleeve with a single row of stitching, 1/8 inch from edge on all sides.

3. Cut 8-inch length of pile fastener tape. To form thumb loop, fold tape back 2 inches from end, with pile side facing out. Stitch across end; backstitch across full width.

4. With pile side facing hook side, align bottom edge of pile tape with bottom edge of hook tape. Stitch across end, through all thicknesses, 1/8 inch from edge. Backstitch across full width.

5. On inside of sleeve, apply seam tape over stitching lines in accordance with paragraph 5-68.

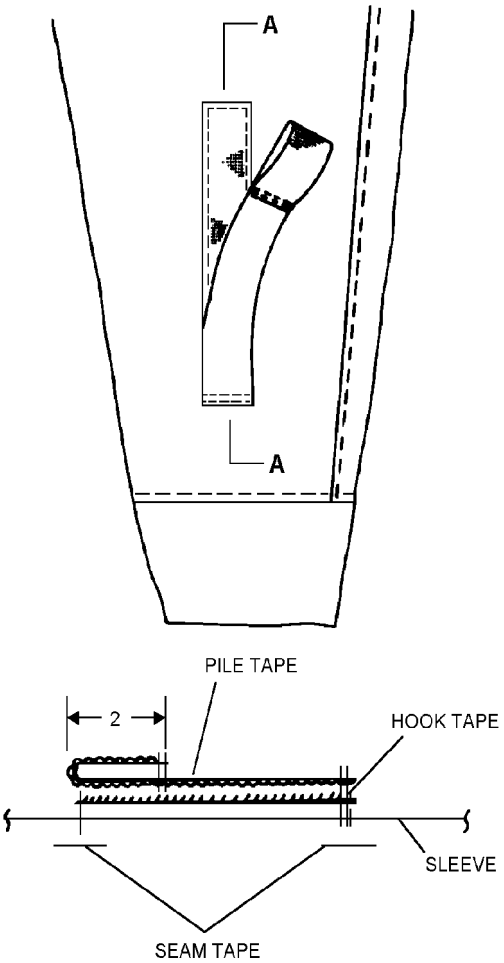

Steps 2 thru 5 - Para 5-67

6. Verify inspection and/or repair and/or fit.

7. Document in accordance with COMNAVAIRFORINST 4790.2.

5-68. PATCHING SMALL TEARS, SMALL RIPS, SMALL POROUS AREAS AND SMALL HOLES (PINHOLES). To apply 2-inch diameter heat circle patches or seam tape reinforcement, proceed as follows using the repairable dimensions below:

CAUTION

Do not close any tears in socks, wrist or neck seals with machine stitching.

NOTE

These procedures shall be performed at the Intermediate Level.

All patching shall extend a minimum of 1/2 inch beyond damaged areas. Patches may be overlapped to achieve a 1/2 inch margin.

Materials Required

Quantity	Description	Reference Number
1	Sewing Machine, Zigzag Single or Double Throw	—
As Required	Thread, Nylon High Temperature Resistant, Sage Green	MIL-T-83193 NIIN 00-130-6245
	-or-	
	Thread, Nylon Size E, Type II Sage Green	V-T-295 NIIN 00-204-3884
1	Sealer, Heat, Seam and Patch	MIL-S-85634
As Required	Heat Circle Patches, 2-Inch Diameter	NIIN 01-192-2489
As Required	Seam Tape, 1 1/2-Inch	NIIN 01-193-0469
	-or-	
	Seam Tape, 7/8-Inch	NIIN 01-189-6361
1	Roller, Hand	GGG-R-00620 NIIN 00-243-9401
1	Torque Wrench, 0-100 lb-in.	—
As Required	Cloth, Special	MIL-C-85637 NIIN 01-196-0076

WARNING

Prior to application of seam tape, Aircrew Survival Equipmentman must be familiar with heat sealing machine operating procedures in NAVAIR 17-10DC-1. Do not allow any coverall material threads or sewing machine thread to protrude from under seam tape.

1. Turn heat-sealing machine (Figure 5-15) to ON and wait 10 minutes for visual thermometer to stabilize at 350°F. If temperature is incorrect, adjust temperature control knob.

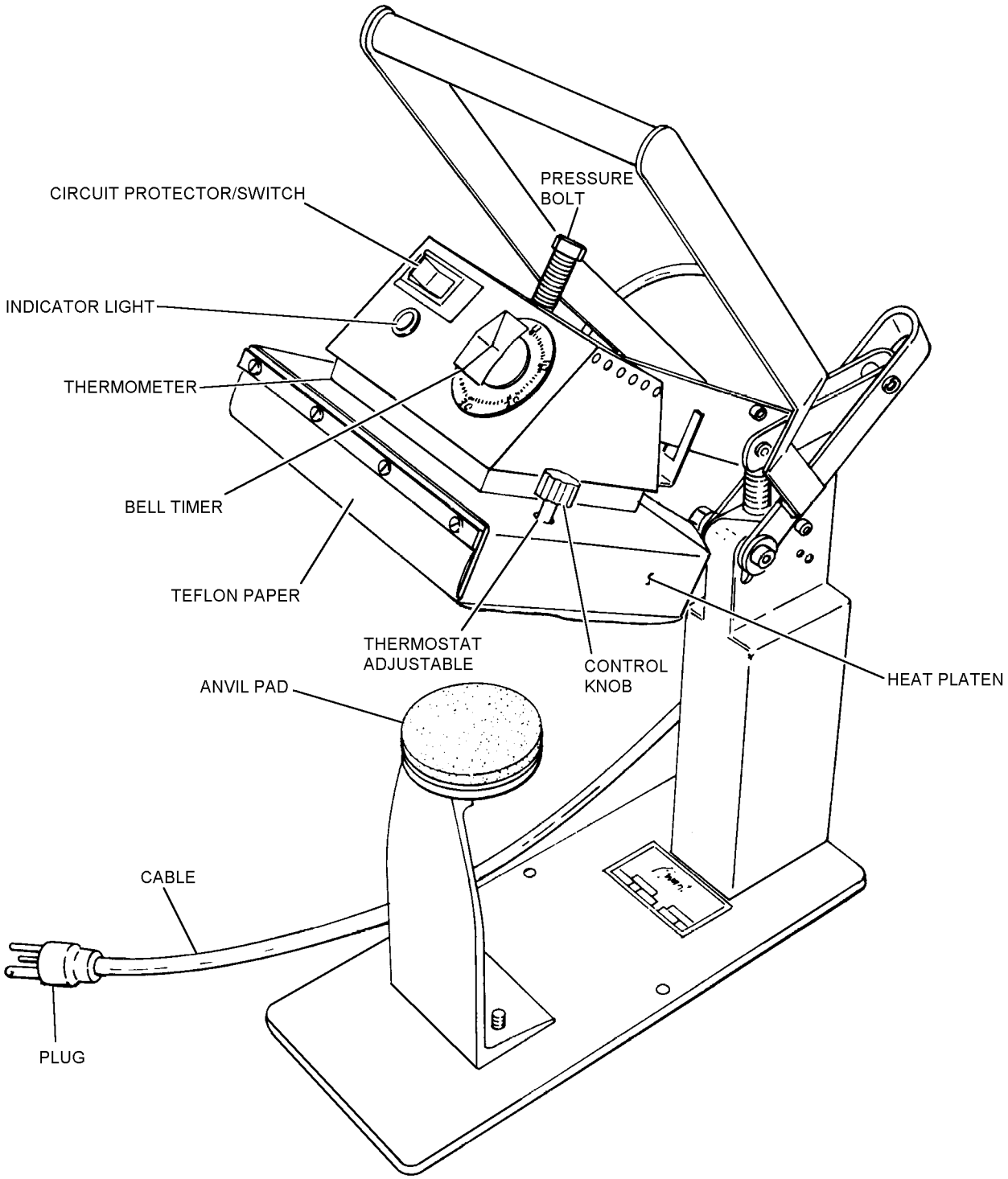

5-16

Figure 5-15. Heat Sealer, Seam and Patch

CAUTION

Temperature is critical; do not overheat.

NOTE

Seam tape is applied to the inside surface of the coverall.

Teflon paper that covers the heat platen can be ordered under NIIN 9330-01-449-5206.

2. Center area to be repaired on anvil pad, ensuring only one layer of fabric is on anvil and there are no wrinkles in fabric.

NOTE

Normal use requires periodic torque pressure adjustment of bolt to 75 ±2 lb-in.

3. Center patch, film-side down, on fabric of the coveralls.

4. Bring heat platen down, locking it in place.

5. Set timer for 25 seconds. When timer bell sounds, raise heat platen.

6. Smooth out wrinkles and air pockets with hand roller to prevent water leakage.

7. Perform leak test in accordance with paragraph 5-55 or 5-56.

8. Verify inspection and/or repair and/or fit.

9. Document in accordance with COMNAVAIRFORINST 4790.2.

5-69. PATCHING LARGE TEARS OR LARGE RIPS. To patch large tears or rips, proceed as follows:

CAUTION

High temperature resistant thread shall be used unless not available in supply. High temperature resistant thread does not propagate flame; nylon thread does.

NOTE

These procedures shall be performed at the Intermediate Level.

All patching shall extend a minimum of 1/2 inch beyond damaged areas. Patches may be overlapped to achieve a 1/2 inch margin.

Zigzag stitching shall be single or double width of throw, 5 to 7 stitches per inch (measured on one side of row). Stitches will vary according to smoothness of tear.

Straight stitching shall be in accordance with ASTM-D-6193, Type 301 lockstitch, 5 to 7 stitches per inch with minimum backstitch or over-stitch of 1 inch. Stitching shall be 1/8 inch from raw edges unless otherwise specified.

Materials Required

Quantity	Description	Reference Number
1	Sewing Machine, Zigzag Single or Double Throw	—
As Required	Thread, Nylon High Temperature Resistant, Sage Green	MIL-T-83193 NIIN 00-130-6345
	-or-	
	Thread, Nylon Size E, Type II Sage Green	V-T-295 NIIN 00-204-3884
1	Sealer, Heat, Seam and Patch	MIL-S-85634
As Required	Heat Circle Patches, 2-Inch Diameter	NIIN 01-192-2489
As Required	Seam Tape, 1 1/2-Inch	NIIN 01-193-0469
	-or-	
	Seam Tape, 7/8-Inch	NIIN 01-189-6361
1	Roller, Hand	GGG-R-00620 NIIN 00-243-9401
1	Torque Wrench, 0 - 100 lb-in.	—
As Required	Cloth, Special	MIL-C-85637 NIIN 01-196-0076

NOTE

Ensure area of coveralls to be patched has been thoroughly dried prior to patching. Round off corners of seam tape prior to application.

1. Lay suit on flat surface, with the inside of the damaged (white) area facing up. Butt damaged fabric edges together. Close tear with zigzag stitching or straight stitching if no zigzag machine is available.

2. With a china marker, mark a rectangular border around damaged area, at least 3/4 inch from raw edges.

3. Measure the dimensions of the damage border and, with a china marker, draw a duplicate shape on a new piece of Special Cloth. Cut out the repair piece.

4. Place repair piece (green side down) on top of the damage area (white side up). Sew repair rectangle to damage rectangle with 1 row of stitches 1/4 inch from rectangle edges.

5. Turn suit right side out. Sew along raw damaged edges to the repair rectangle using 2 rows of stitches 1/16 inch apart, and keeping 1/8 inch from raw damaged edges.

6. Turn suit inside out and apply 1 1/2-inch or 7/8-inch wide heat seal tape over all stitching per paragraph 5-68.

7. Perform leak test in accordance with paragraph 5-55 or 5-56.

8. Verify inspection and/or repair and/or fit.

9. Document in accordance with COMNAVAIRFORINST 4790.2.

5-70. PATCHING LARGE HOLES. To patch large holes, proceed as follows:

CAUTION

High temperature resistant thread shall be used unless not available in supply. High temperature resistant thread does not propagate flame; nylon thread does.

NOTE

These procedures shall be performed at the Intermediate Level.

All patching shall extend a minimum of 1/2 inch beyond damaged areas. Patches may be overlapped to achieve a 1/2 inch margin.

If hole is larger than 3-inch diameter, suit has been exposed to atypical wear, and should be submitted to I-Level for possible condemning.

Zigzag stitching shall be single or double width of throw, 5 to 7 stitches per inch (measured on one side of row). Stitches will vary according to smoothness of tear.

Straight stitching shall be in accordance with ASTM-D-6193, Type 301 lockstitch, 5 to 7 stitches per inch with minimum backstitch or over-stitch of 1 inch. Stitching shall be 1/8 inch from raw edges unless otherwise specified.

Materials Required

Quantity	Description	Reference Number
1	Sewing Machine, Zigzag Single or Double Throw	—
As Required	Thread, Nylon High Temperature Resistant, Sage Green	MIL-T-83193 NIIN 00-130-6245
	-or-	
	Thread, Nylon Size E, Type II Sage Green	V-T-295 NIIN 00-204-3884
1	Sealer, Heat, Seam and Patch	MIL-S-85634
As Required	Heat Circle Patches, 2-Inch Diameter	NIIN 01-192-2489

Materials Required (Cont)

Quantity	Description	Reference Number
As Required	Seam Tape, 1 1/2-Inch	NIIN 01-193-0469
	-or-	
	Seam Tape, 7/8-Inch	NIIN 01-189-6361
1	Roller, Hand	GGG-R-00620 NIIN 00-243-9401
1	Torque Wrench, 0 - 100 lb-in.	—
As Required	Cloth, Special	MIL-C-85637 NIIN 01-196-0076

1. Lay suit on flat surface, with the inside of the damaged (white) area facing up. With a china marker, mark a circular border around the hole, at least 3/4 inch from raw edges. Do not butt edges together.

2. Draw up to a 4-inch identical circle on a new piece of Special Cloth. Cut out the repair circle.

NOTE

(OPTIONAL) To make hemming easier, stitch 3/8 inch from unhemmed edge of circle, overlapping stitching and not back-stitching. Remove from sewing machine, leaving 6-inch tails of thread. Pull gently on the bobbin thread. This will force the outer edge of the circle to fold in on itself along the stitch line. Tie off the bobbin thread when the desired fold edge has been achieved.

3. Hem the repair circle by turning under 3/8 inch and stitching 1/8 inch from folded edge.

4. Turn the suit right side out. Center the repair circle over the damaged area, and make alignment marks at even quarters on both the repair circle and the suit.

5. Sew the repair circle to the suit using one row of stitches 1/16 inch from the hemmed edge, maintaining alignment.

6. Turn suit inside out. Tape the repair seams with 1 1/2-inch or 7/8-inch wide seam tape per paragraph 5-68.

7. Perform leak test in accordance with paragraph 5-55 or 5-56.

8. Verify inspection and/or repair and/or fit.

9. Document in accordance with COMNAVAIRFORINST 4790.2.

5-71. PATCHING LARGE POROUS AREAS. To patch large porous areas, proceed as follows:

CAUTION

High temperature resistant thread shall be used unless not available in supply. High temperature resistant thread does not propagate flame; nylon thread does.

NOTE

These procedures shall be performed at the Intermediate Level.

All patching shall extend a minimum of 1/2 inch beyond damaged areas. Patches may be overlapped to achieve a 1/2 inch margin.

Porous areas requiring patches larger than 7 inches by 7 inches shall render coveralls Non Ready For Issue (non-RFI). Maximum cut size of patches shall be 8 inches by 8 inches. All patches shall be cut one inch larger than area to be patched.

Zigzag stitching shall be single or double width of throw, 5 to 7 stitches per inch (measured on one side of row). Stitches will vary according to smoothness of tear.

Straight stitching shall be in accordance with ASTM-D-6193, Type 301 lockstitch, 5 to 7 stitches per inch with minimum backstitch or over-stitch of 1 inch. Stitching shall be 1/8 inch from raw edges unless otherwise specified.

Materials Required

Quantity	Description	Reference Number
1	Sewing Machine, Zigzag Single or Double Throw	—
As Required	Thread, Nylon High Temperature Resistant, Sage Green	MIL-T-83193 NIIN 00-130-6245
	-or-	
	Thread, Nylon Size E, Type II Sage Green	V-T-295 NIIN 00-204-3884
1	Sealer, Heat, Seam and Patch	MIL-S-85634
As Required	Heat Circle Patches, 2-Inch Diameter	NIIN 01-192-2489
As Required	Seam Tape, 1 1/2-Inch	NIIN 01-193-0469
	-or-	
	Seam Tape, 7/8-Inch	NIIN 01-189-6361
1	Roller, Hand	GGG-R-00620 NIIN 00-243-9401
1	Torque Wrench, 0 - 100 lb-in.	—
As Required	Cloth, Special	MIL-C-85637 NIIN 01-196-0076

1. Lay suit on flat surface, with the inside of the porous (white side) area facing up. With a china marker, mark a rectangular border around porous area.

2. Measure the dimensions of the porous border and, with a china marker, draw a duplicate shape on a new piece of Special Cloth. Add 1/2 inch to border of the repair piece and cut out the repair piece.

3. Place repair rectangle (green side down) on top of the porous area (white side up). Sew repair rectangle over porous rectangle with 1 row of stitches 1/4 inch from repair rectangle edges.

4. Turn suit right side out. Over the porous area, mark a new rectangle 1/4 inch inside reinforcement stitch line. Cut out the new rectangle along new marked line, being careful not to nick or cut the repair piece underneath.

NOTE

Patches shall not be within one inch of another patched area.

5. Turn coverall inside out. Apply tape to overlap both stitching and cut edges of repair rectangle and trimmed-out porous rectangle on the inside of the coverall per paragraph 5-68.

NOTE

Patching over patches (meaning patching a patch) is not authorized.

6. Perform leak test in accordance with paragraph 5-55 or 5-56.

7. Document in accordance with COMNAVAIRFORINST 4790.2.

5-72. REPLACEMENT OF ORIGINAL CONSTRUCTION SEAM TAPE. To replace original construction seam tape, proceed as follows:

NOTE

See paragraph 5-92, step 3 for limitations.

Materials Required

Quantity	Description	Reference Number
1	Sewing Machine, Zigzag Single or Double Throw	—
As Required	Thread, Nylon High Temperature Resistant, Sage Green	MIL-T-83193 NIIN 00-130-6245
	-or-	
	Thread, Nylon Size E, Type II Sage Green	V-T-295 NIIN 00-204-3884
1	Sealer, Heat, Seam and Patch	MIL-S-85634
As Required	Heat Circle Patches, 2-Inch Diameter	NIIN 01-192-2489
As Required	Seam Tape, 1 1/2-Inch	NIIN 01-193-0469
	-or-	
	Seam Tape, 7/8-Inch	NIIN 01-189-6361
1	Roller, Hand	GGG-R-00620 NIIN 00-243-9401
1	Torque Wrench, 0 - 100 lb-in.	—
As Required	Cloth, Special	MIL-C-85637 NIIN 01-196-0076

1. Using the heat sealer, heat the area and peel off the loose tape. Remove excess glue by scraping with a spatula or similar flat tool, without damaging the coveralls fabric. Continue the process for the length of the loose tape.

2. Center one layer of seam tape over the seam and apply tape in accordance with paragraph 5-68.

3. Perform leak test in accordance with paragraph 5-55 or 5-56.

4. Verify inspection and/or repair and/or fit.

5. Document in accordance with COMNAVAIRFORINST 4790.2.

5-73. REPAIR OF LOOSE SEAM TAPE ATTACHING COMPONENTS TO COVERALL. To repair loose seam tape attaching neck seals, wrist seals, or socks, proceed as follows:

NOTE

Repairs are permissible only if the existing component remains intact. If the existing item is irreparably damaged, replace the component.

Materials Required

Quantity	Description	Reference Number
1	Sewing Machine, Zigzag Single or Double Throw	—
As Required	Thread, Nylon High Temperature Resistant, Sage Green	MIL-T-83193 NIIN 00-130-6245
	-or-	
	Thread, Nylon Size E, Type II Sage Green	V-T-295 NIIN 00-204-3884
1	Sealer, Heat, Seam and Patch	MIL-S-85634
As Required	Heat Circle Patches, 2-Inch Diameter	NIIN 01-192-2489
As Required	Seam Tape, 1 1/2-Inch	NIIN 01-193-0469
	-or-	
	Seam Tape, 7/8-Inch	NIIN 01-189-6361
1	Roller, Hand	GGG-R-00620 NIIN 00-243-9401
1	Torque Wrench, 0 - 100 lb-in.	—
As Required	Cloth, Special	MIL-C-85637 NIIN 01-196-0076

1. Trim loose seam tape from the point of separation.

2. Cut a new strip of seam tape and round the corners. Apply new strip of seam tape over the existing trimmed seam tape using the heat sealer in accordance with paragraph 5-68. Ensure that at least a 1/2-inch overlap exists between existing and new seam tape.

3. Perform leak check in accordance with paragraph 5-55 or 5-56.

4. Verify inspection and/or repair and/or fit.

5. Document in accordance with COMNAVAIRFORINST 4790.2.

5-74. REPLACEMENT OF SRU-25/P OR CWU-75/P SOCKS. To remove and replace unserviceable socks, proceed as follows:

NOTE

For initial installation of SRU-25/P or CWU-75/P socks, refer to paragraph 5-36.

Materials Required

Quantity	Description	Reference Number
As Required	Tape, Seam, 1 1/2-Inch	NIIN 01-193-0469
	-or-	
	Tape, Seam, 7/8-Inch	NIIN 01-189-6361
As Required	Thread, Nylon, High Temperature Resistant, Sage Green	MIL-T-83193 NIIN 00-130-6245
	-or-	
	Thread, Nylon Size E, Type II Sage Green	V-T-295 NIIN 00-204-3884 or equivalent

Materials Required (Cont.)

Quantity	Description	Reference Number
1	Roller, Hand	GGG-R-00620 NIIN 00-243-9401
1	Pencil, China Marking	SS-P-196 or A-A-87
1	Chalk	SS-C-266

CAUTION

Do not mark coverall material with ball-point pen or lead pencil. Use only china marking pencil or tailor's chalk.

NOTE

Ensure coverall is right side out.

1. Remove old socks by cutting with scissors on stitch line.

2. Remove old seam tape from coverall leg by peeling tape off.

3. (A/P22P-6 Series only) Have aircrewmember don A/P22P-6 Series assembly (except hood, mittens and CWU-27/P), the appropriate PCU-Series torso harness, if applicable, proper size heavy wool socks and replacement SRU-25/P or CWU-75/P socks.

4. Mark coverall legs and socks (L and R) on inside and front and back to ensure socks are matched to correct leg during installation.

5. (A/P22P-6 Series only) Have aircrewmember sit in a straight-back chair with legs drawn back, heels directly below kneecaps and feet flat on floor.

NOTE

If aircrewmember's leg length is such that allowances provided in steps 6 through 9 (2-inch sock fold and 1-inch allowance beyond inseam mark) are not possible, refer to paragraph 5-87 for coverall leg extending instructions.

Removing top 2 inches of sock at initial installation is intended to ensure adequate coverall leg material remains for future sock replacements.

Ensure not to cut coverall too short.

6. Turn top 2 inches of sock down, forming a temporary cuff. Mark the circumference of coverall legs where they meet top of folded socks.

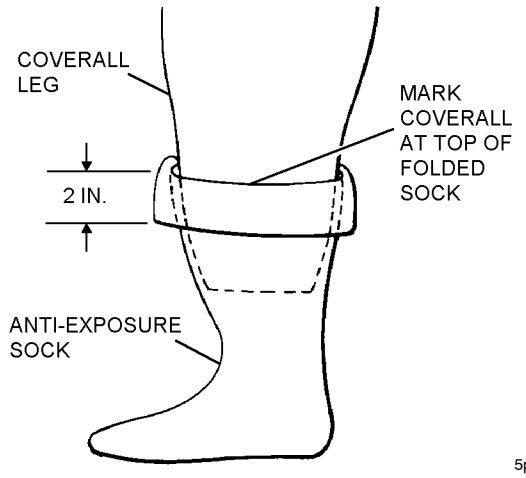

Step 6 - Para 5-74

7. (A/P22P-6 Series Only) Have aircrewmember doff socks and coveralls.

8. Remove top 2 inches of sock with a pair of sharp scissors.

9. Remove excess material from coverall leg by cutting a line 1 inch below the circumferential mark applied in step 6. Ensure leg is cut perpendicular to lengthwise direction of leg. Make alignment marks at front of coverall leg and sock to ensure sock will be properly aligned with leg during attachment.

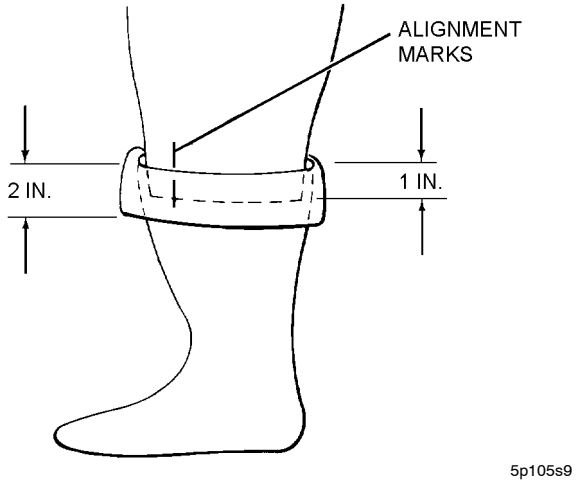

Step 9 - Para 5-74

10. Turn coverall inside out. OTS-600 coveralls are not turned inside out.

NOTE

Due to slight differences in circumference of coverall leg and sock opening, it is recommended that alignment marks be added to both items before sewing. Make marks at front, back and both sides, equally spaced around circumference of both openings. It may be necessary to manually induce an uneven feeding of materials into sewing machine in order to compensate for differences in sock and coverall leg circumferences, thereby minimizing pleats or puckers.

11. Lay coverall out flat, face up.

NOTE

Ensure right sock is on right coverall leg and left sock is on left coverall leg.

12. Insert sock into leg opening, so that right sides of sock and coverall leg are facing each other.

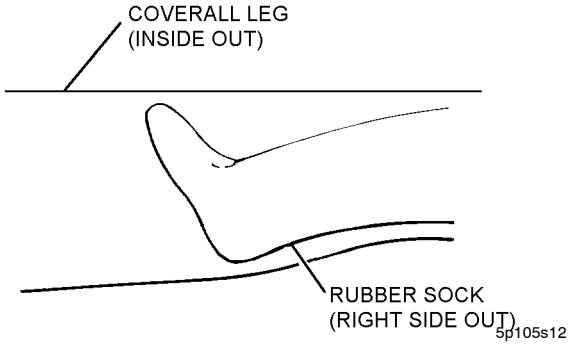

Step 12 - Para 5-74

13. Beginning at front of leg, with leg and sock alignment marks matched, attach sock with one row of stitches, 1/4 inch from cut edges, 5 to 7 stitches per inch, using nylon size E thread. Overlap stitching 1 inch. Do not backstitch. Minor pleats and puckers not affecting seam integrity are permissible. Satisfactory completion of required water test is final criteria coverall condition is RFI.

14. After removing suit from sewing machine, pull boot out through bottom of leg opening, exposing cut edges of seam.

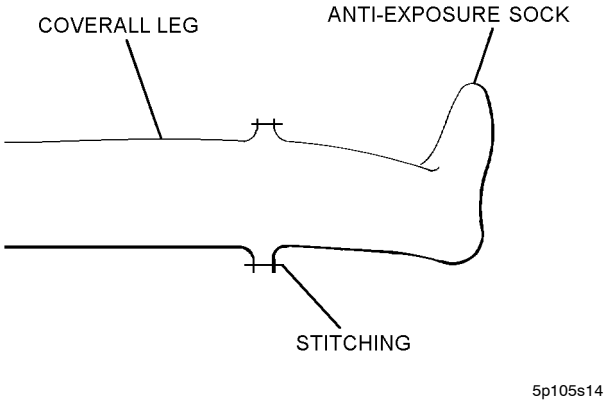

Step 14 - Para 5-74

15. Fold cut edges of seam down over sock. Make fold as near stitch line as possible.

WARNING

Prior to application of seam tape, Aircrew Survival Equipmentman must be familiar with heat sealing machine operating procedures in NAVAIR 17-10DC-1. Refer to paragraph 5-68 for application of seam tape.

Do not allow any coverall material threads or sewing machine thread to protrude from under seam tape.

16. Apply one layer of 1 1/2-inch seam tape to seam on inside, keeping stitch line and cut edges as nearly centered under tape as possible. Overlap ends of seam tape 1 inch.

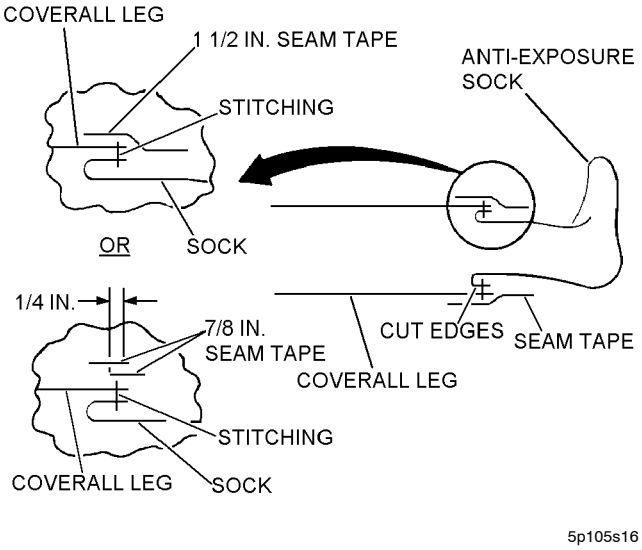

Step 16 - Para 5-74

NOTE

1 1/2-inch seam tape should be used when available.

If 7/8-inch seam tape is used, a second layer of seam tape may be applied, if necessary, to adequately cover stitching and cut edges of seam.

17. Immediately after lifting off heat sealer, remove air pockets with a hand roller by rolling along both sides of seam where air pocket occurs.

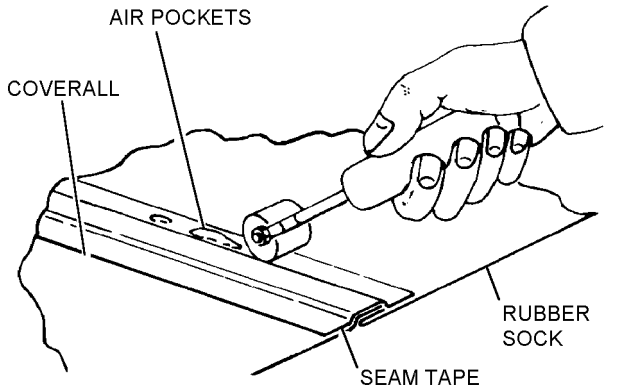

Step 17 - Para 5-74

18. Perform leak check in accordance with paragraph 5-55 or 5-56.

19. Turn coverall right side out.

20. Verify inspection and/or repair and/or fit.

21. Document in accordance with COMNAVAIRFORINST 4790.2.

5-75. (A/P22P-6 SERIES ONLY) PRE-INSTALLATION INSPECTION OF REPLACEMENT NECK AND WRIST SEALS. Replacement neck and wrist seals for the CWU-62/P Series anti-exposure coverall is assigned a shelf life of three years. However, they may still be serviceable beyond the assigned expiration date. All neck seals (P/N 1725AS102-4) and wrist seals (P/Ns 1725AS101-1, 1725AS101-2, 1725AS101-3, and 1725AS101-4) may be installed regardless of expiration date only after passing the following inspection to determine their usability.

1. Inspect wrist seal in the following manner:

a. Visually inspect each wrist seal for cracking, especially at the open edges of the seal (i.e. top and bottom edges).

b. Lay wrist seal on its side and press out flat. Hold seal at top and bottom edges and stretch vertically. Inspect for cracks and deterioration. Repeat this procedure until the entire circumference of the seal has been inspected. If cracks or deterioration are identified, discard seal.

c. Lay wrist seal on its side and press out flat. Hold seal at its sides (folded edge) and stretch horizontally. Inspect for cracks and deterioration. Repeat this procedure until the entire surface of the seal has been inspected. If cracks or deterioration are identified, discard seal.

2. Inspect neck seal using procedures described in steps a thru c above.

NOTE

The neck seal is molded into a bellows shape.

3. Neck and wrist seal shall be used only after passing the above inspection.

4. Verify inspection and/or repair and/or fit.

5. Document in accordance with COMNAVAIRFORINST 4790.2.

5-76. REPLACING CWU-62/P SERIES COVERALLS WRIST SEALS. To replace wrist seals, proceed as follows:

Materials Required

Quantity	Description	Reference Number
As Required	Tape, Seam, 1 1/2-Inch	NIIN 01-193-0469
	-or-	
	Tape, Seam, 7/8-Inch	NIIN 01-189-6361
As Required	Thread, Nylon, High Temperature Resistant	MIL-T-83193 NIIN 00-130-6245
As Required	Adhesive, Polyurethane (Note 1 and 2)	UR-1092 NIIN 01-447-8206
1	Roller, Hand	GGG-R-00620 NIIN 00-243-9401
1	Pencil, China Marking	SS-P-196
1	Chalk	SS-C-266
As Required	Methyl Ethyl Ketone	TT-M-261 NIIN 00-823-8052 NIIN 00-687-8429 or equivalent
As Required	Cloth, Cleaning Type II	MIL-C-85043 NIIN 00-045-9281
As Required	Emery Paper	—

Notes: 1. Adhesives may come from supply that contain both a base adhesive and an accelerator. Mixing of the accelerator with the base adhesive is not recommended for use on any items requiring adhesive in this manual. Use only the base adhesive.

2. Activities that cannot obtain UR-1092 Polyurethane adhesive via GSA/normal supply channels can order it via Michael C. Dilts, Vice President, Switlik Parachute Co., Inc., 1325 East State Street, PO Box 1328, Trenton, NJ 08607-1328 (609)587-3300; fax (609)586-6647.

NOTE

The cotton-flocked wrist seals, used on the CWU-62/P, are no longer being procured. Defective wrist seals may continue to be replaced with any cotton-flocked seals available locally. However, it is preferable to replace all wrist seals with the new CWU-62/P series coverall latex rubber seals (Table 5-9). Once latex seals have been installed, the coverall should be redesignated as CWU-62A/P.

If latex wrist seals are being installed, the new wrist seals must be cleaned in accordance with step 6.

1. Before installing or replacing wrist seals on the CWU-62/P series coverall, inspect each seal in accordance with paragraph 5-75.

2. Select correct size wrist seal from Table 5-9.

3. Remove old wrist seals by cutting with scissors along the bottom (closest to end of sleeve) stitch line.

4. Remove old seam tape from coverall sleeve by peeling the tape off (CWU-62A/P only).

5. Make four alignment marks equally spaced around circumference of both wrist seal and coverall sleeve opening.

NOTE

When attaching correct size wrist seal to arm opening of CWU-62/P series coverall, the dull side of seal should face toward the inside (next to the skin) and the shiny side should face out.

Table 5-9. Replacement Wrist Seals CWU-62/P Series

Government Part #	Size	Wrist Circumference	NIIN
NOTE Size 0 wrist seals can be obtained open purchase from FORMCO at 330-966-2111. Very small wrists that require an even smaller wrist seal than size 0 can be fabricated from the manufacturers "untrimmed" seals that start out longer and narrower before the manufacturer trims them for shipping. If this smaller size is needed, be sure to tell FORMCO (330-966-2111) when ordering the wrist seals that you want an untrimmed wrist seal.			
1725AS101-1	1	Up to 6 1/2″	01-315-9428
1725AS101-2	2	6 1/2″ - 6 3/4″	01-312-3144
1725AS101-3	3	6 7/8″ - 7 1/8″	01-312-3145
1725AS101-4	4	7 1/4″ - 7 5/8″	01-311-2831

6. Wipe surface of latex wrist seals using Methyl Ethyl Ketone (MEK) or acetone and cleaning cloth to remove all residue. Allow 15 to 30 seconds for MEK to "flash off".

NOTE

Latex wrist seals must be clean for adhesive to hold to the latex.

7. With coverall sleeve turned inside out place new wrist seal, right side out, small end first, into sleeve opening.

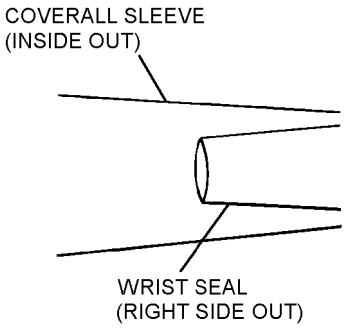

5p108s7

Step 7 - Para 5-76

8. For CWU-62A/P, CWU-62B/P, and CWU-62C/P, align seal in coverall sleeve by matching marks. For CWU-62/P, position wrist seal construction seam adjacent to, but not directly over, sleeve construction seam.

NOTE

Circumference of wrist seal and sleeve opening may not be the same. When sewing wrist seal to coverall, it may be necessary to manually induce an uneven feeding of material to avoid pleats or puckers in seam. Pleats and puckers are not acceptable.

9. While ensuring cut edges are kept even, sew one row of stitches (5 to 7 stitches per inch) around circumference of opening. Overlap stitching 1 inch. Do not backstitch. Make stitches 1/4 inch from cut edges.

NOTE

If aircrewmember's arm length is such that proper location of the wrist seals is not possible or too much fabric has been removed in previous wrist seal replacements, refer to paragraph 5-88 for instructions for increasing sleeve length.

10. Prior to pulling wrist seal out of sleeve, trim loose ends 1/4 inch from sewn seam.

a. Pull wrist seal out of sleeve and insert a sleeve stiffener (plastic cup/cardboard tube locally manufactured) into sleeve to hold the sleeve end and wrist seal firmly in place.

b. Using emery paper (sandpaper), lightly scuff the surface of the wrist seal one inch from the seam.

c. Clean scuffed wrist seal with methyl ethyl ketone (MEK) and allow to dry for a minimum of five minutes.

11. Measure from the sewn edge toward the wrist seal outer edge one inch and mark circumference of the wrist seal using a grease pencil.

NOTE

Seam tape will not adhere properly to latex wrist seal without adhesive.

Do not use an accelerator (catalyst) with this adhesive.

Ensure the adhesive is not overage.

12. (CWU-62 Series) Apply adhesive to latex wrist seal as follows:

NOTE

Do not use masking tape to outline the one-inch mark. The polyurethane adhesive will stick to the masking tape and make clean removal of the masking tape impossible.

a. Apply a liberal coat of adhesive to the wrist seal surface between the trimmed edge and the grease pencil mark applied in step 11.

b. Allow 5 to 10 minutes for adhesive to dry, then apply a second liberal coat of adhesive to the wrist seal surface between the trimmed edge and the grease pencil mark applied in step 11.

NOTE

Application of heat seal tape (step 14) is time sensitive to step 12c.

c. Allow 15 minutes for second coat of adhesive to dry, then swab adhesive surface of latex wrist seal with a cloth dampened with MEK or acetone. Note time of completion.

NOTE

To achieve optimum tack, allow excess solvent to “flash off” for 15 to 30 seconds.

d. When aggressively tacky, fold sewn wrist seal section toward the wrist seal outer edge, joining the sewn edge of the wrist seal to the wrist seal by a single fold.

e. Using a hand roller, remove any folds or pleats from the wrist seam adhesive area to ensure a smooth finish.

13. Turn on the heat seal machine and adjust temperature on the heat seal platen to 300°F. Allow ten minutes for temperature to stabilize.

WARNING

Extended exposure to heat degrades adhesive.

NOTE

Both 1 1/2-inch and 7/8-inch heat seal tape are acceptable for heat sealing the wrist seal, however, the 1 1/2-inch tape is preferred. Only one layer of tape is to be used when sealing the seam regardless of tape size used.

14. One hour after completion of step 12c above, apply heat seal tape with the heat sealer machine temperature set at 300°F for a duration of 20 seconds per heat sealed section.

a. After heat platen is lifted from the fabric surface, press the fabric surface with the hand roller until surface temperature is approximately 100°F or body temperature.

b. Ensure there are no air pockets under the heat seal tape.

c. Tape shall extend 1/4 inch beyond cut edges of material. Overlap ends of seam tape 1 inch.

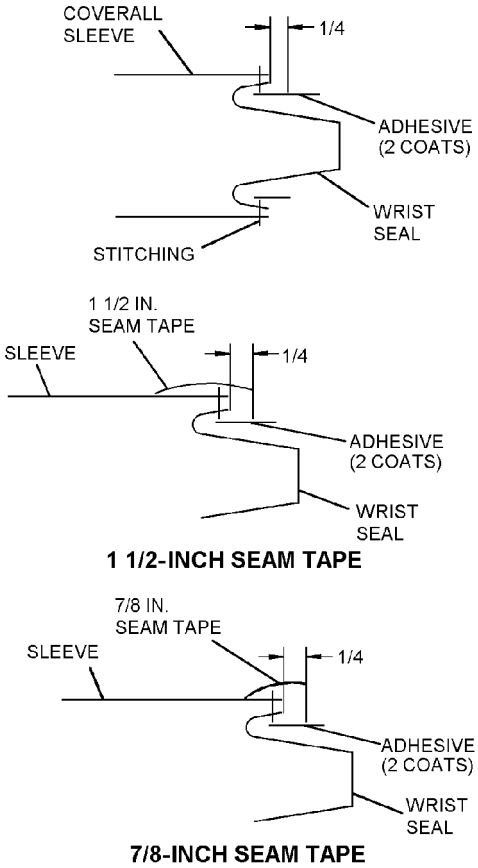

Steps 10 thru 14 - Para 5-76

15. Have aircrewmember don the coverall to assure wrist seals are located properly on the arms.

16. Verify inspection and/or repair and/or fit.

17. Document in accordance with COMNAVAIRFORINST 4790.2.

5-77. O-LEVEL PROCEDURES FOR INITIAL FITTING AND REPLACEMENT OF THE LATEX OR FLOCKED WRIST SEAL WITH THE WRIST SEAL UNIT. The aramid fabric panel of the wrist seal unit allows attachment to the coverall sleeve by sewing and heat seam taping aramid cloth to aramid cloth thereby eliminating the need to use adhesives in replacement of wrist seals. The wrist seals units are dual manufactured, i.e. they are constructed of a flame resistant aramid fabric panel and a neoprene cone-shaped gasket. Together the neoprene cone-shaped gasket and the aramid fabric panel are referred to as the wrist seal unit (Figure 5-16). The wrist seal units are manufactured so that each wrist seal unit can be attached to either the right or left sleeve; there are no left and right sleeve wrist seal units, just one wrist seal unit that fits either left or right sleeve (Figure 5-17). The wrist seal unit can be used on any of the CWU-62/P series coveralls and the CWU-74/P series coveralls to replace a damaged latex/flocked wrist seal.

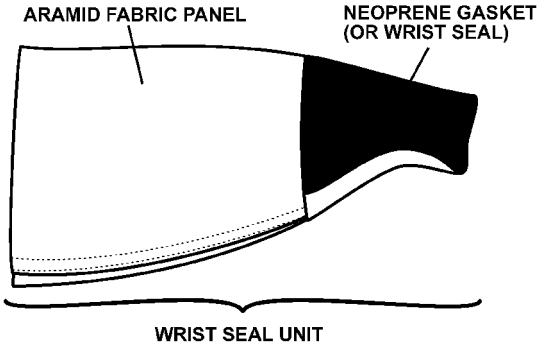

Figure 5-16. Wrist Seal Unit

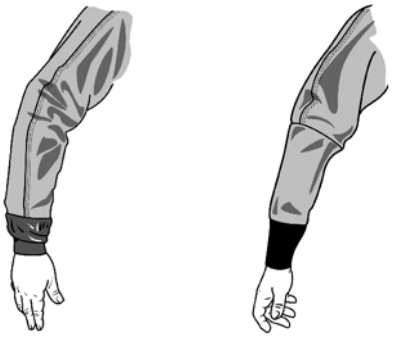

Figure 5-17. Latex Wrist Seal (left) and New Wrist Seal Unit (right)

Materials Required

Quantity	Description	Reference Number
As Required	Chalk	NIIN 7510-00-170-9315 -or-
As Required	Pencil, Wax (China Marking)	NIIN 7510-00-264-4612 -or- 7510-00-223-6676 (or equivalent)
As Required	Unit, Wrist Seal	S-3321-2
As Required	Thread, Nylon, Size E, Class II, Green	8310-00-204-3884

Notes: 1. Wrist seal units will be available open purchase during the second or third quarter 2005. To obtain the wrist seal unit please contact Mr. Michael Dilts, Vice President, Switlik Parachute Co., Inc., 1325 East State Street, P.O. Box 1328, Trenton, NJ 08607-1328.
Phone (609) 587-3300;
Fax (609) 586-6647.

NOTE

The neoprene wrist seal gasket on the new wrist seal unit can be fit to the aircrewmember either before or after attachment of the new wrist seal unit to the coverall.

5-78. Sizing/Fitting of the Wrist Seal Unit to the Aircrewmember. Wrist seals are one-size-fits-all, trim-to-fit. The neoprene gasket end of the wrist seal opening must be trimmed, 1/4 inch at a time, until an acceptable fit has been achieved. An acceptable fit is when the seal creates a watertight barrier around the wrist through complete range of motion of the hand about the wrist, without restricting blood flow to the hand, i.e., not too tight. If wrist seal sizing is required, proceed as follows:

NOTE

The neoprene wrist seal gasket is very narrow when manufactured in order to accommodate very small writs sizes. It may not be possible for the aircrewmember to don until some initial trimming is done in accordance with step 2.

1. Have aircrewmember don the wrist seal unit, if possible, and observe the overall fit of the neoprene gasket of the wrist seal unit on the aircrewmember's wrist. Have the aircrewmember doff the wrist seal unit and if the neoprene wrist seal gasket is too tight trim the wrist seal 1/4 inch at a time. The best technique is to cut in one motion and avoid repeated small snips. Trimming increments shall not exceed 1/4 inch at a time.

2. After trimming wrist seal, have aircrewmember don wrist seal unit and determine seal restriction and water-sealing characteristics. Make any adjustments in accordance with step 1 until the neoprene wrist seal gasket fits the aircrewmember.

5-79. Removal and Replacement of the Latex or Flocked Wrist Seal. To replace a damaged wrist seal with the wrist seal unit proceed as follows:

1. Turn coveralls inside out and lay coveralls on a flat surface, face up. Smooth and flatten the coverall sleeve of the damaged wrist seal as much as possible.

Step 1 - Para 5-79

CAUTION

The neoprene gasket wrist seal on the wrist seal unit will normally be longer than the latex wrist seal being replaced and if matched from the opening ends of the latex and neoprene would result in excess material being removed from the sleeve of the coverall. Match the wrist seal seam on the coverall to the seam on the wrist seal unit during the measuring and cutting of the coverall sleeve.

2. Lay the new wrist seal unit directly on top of the coverall sleeve needing a new wrist seal. Ensure that the wrist seal seam of the coverall is directly underneath and aligned with the neoprene gasket/fabric panel seam of the new wrist seal unit.

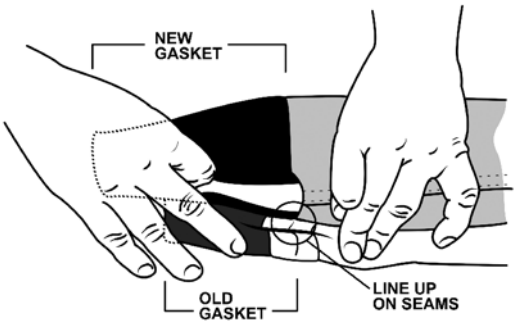

Step 2 - Para 5-79

CAUTION

Do not mark coverall with ballpoint pen or lead pencil. Use only china marking pencil or chalk.

3. Using a china marker or chalk draw a line directly on the coverall sleeve along top edge of the new wrist seal unit. This first line is the reference line and is used to measure for the coverall sleeve cut line drawn in step 4. Remove new wrist seal unit from the top of the coverall sleeve and put aside.

Step 3 - Para 5-79

4. Accommodate for seam allowance when sewing the wrist seal unit to the coverall sleeve by adding 3/4 of an inch to the coverall sleeve length before cutting off old wrist seal. To do this, use the reference line drawn in step 3 and measure 3/4 of an inch down from the reference line towards the latex/flocked wrist seal. Continue marking 3/4 down from, and parallel to, the reference line across the width of the coverall sleeve.

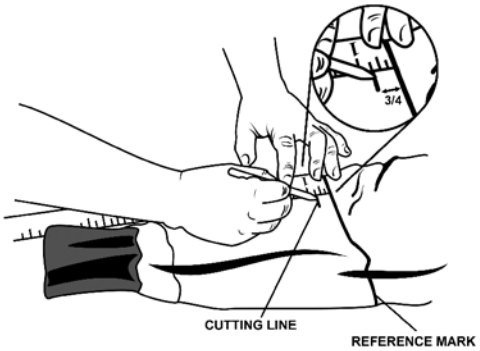

Step 4 - Para 5-79

5. Using the marks made in step 4 draw a line parallel to the reference line on the coverall sleeve. This is the cut line.

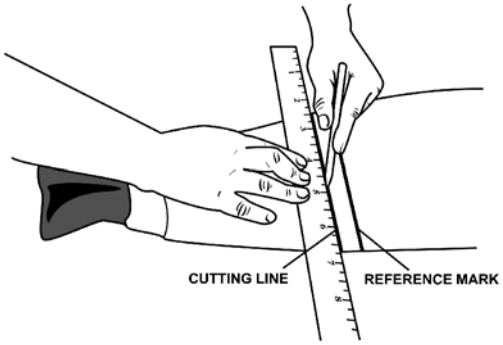

Step 5 - Para 5-79

6. Cut sleeve off at the cut line, through both the top and bottom layers of the sleeve. Discard old wrist seal and excess coverall sleeve.

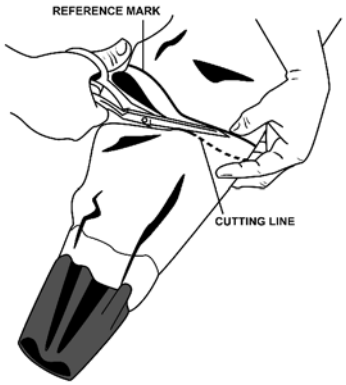

Step 6 - Para 5-79

Step 6a - Para 5-79

7. Slide the new wrist seal unit up into the now shortened sleeve of the coverall (neoprene wrist seal gasket first) so that right sides are together and raw edge circumference of the sleeve and wrist seal unit

are aligned. Ensure the seam of the coverall sleeve is slightly offset from, but next, to the seam on the wrist seal unit.

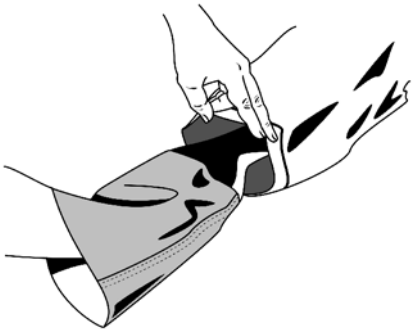

Step 7 - Para 5-79

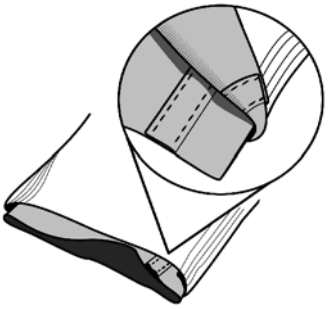

Step 7a - Para 5-79

CAUTION

High temperature resistant thread shall be used unless not available in supply. High temperature resistant thread does not propagate flame; nylon thread does.

8. Due to slight differences in circumference of coverall sleeve and wrist seal unit openings, alignment marks shall be added to both items before sewing. Make marks at front, back and both sides, equally spaced around circumference of both openings. It may be necessary to manually induce an uneven feeding of materials into sewing machine in order to compensate for differences in sleeve and wrist seal unit opening circumferences, thereby minimizing pleats or puckers.

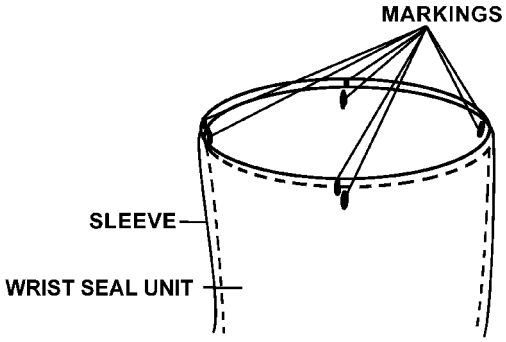

Step 8 - Para 5-79

9. Beginning at the front of the sleeve, with sleeve and wrist seal unit alignment marks matched, attach wrist seal unit with one row of stitches, 3/8 inch from cut edges, 5 to 7 stitches per inch using nylon, size E thread. Overlap stitching 1/2 inch. Do not backstitch.

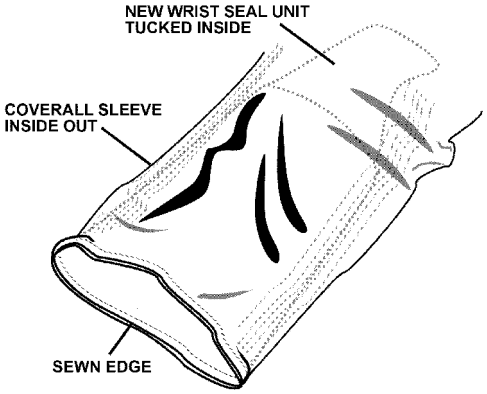

Step 9 - Para 5-79

10. After removing suit from sewing machine, pull wrist seal unit out through the sleeve opening, exposing cut edges of seam. Ensure the seams are together but offset slightly and that the stitching is 3/8 inch from the edge.

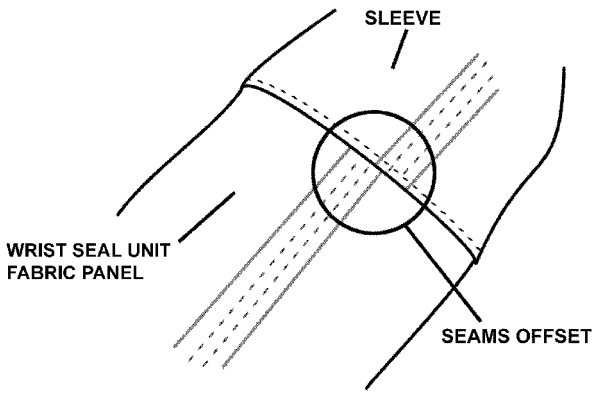

Step 10 - Para 5-79

11. Turn right side out. Press seam to one side and topstitch in place, 1/4 inch from seam line.

12. Verify repairs.

13. Forward coveralls to I-Level for application of seam tape in accordance with paragraph 5-68 and the leak check in accordance with paragraph 5-55 or 5-56.

14. Document in accordance with COMNAVAIR-FORINST 4790.2.

5-80. O-LEVEL PROCEDURES FOR REPLACING A PREVIOUSLY INSTALLED WRIST SEAL UNIT WITH A NEW WRIST SEAL UNIT. To replace a previously installed wrist seal unit with a new one proceed as follows (Figure 5-18 and Figure 5-19):

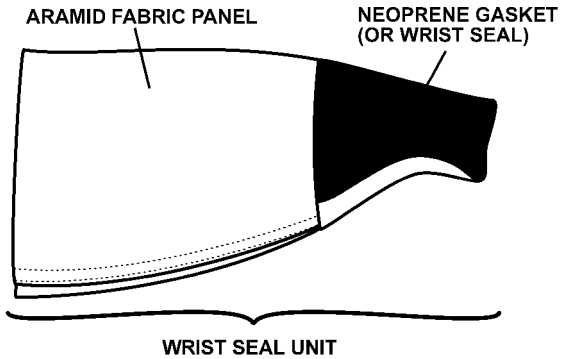

Figure 5-18. Wrist Seal Unit

Figure 5-19. Anti-Exposure Coverall with Wrist Seal Unit

Materials Required

Quantity	Description	Reference Number
As Required	Chalk	NIIN 7510-00-170-9315 -or-
As Required	Pencil, Wax (China Marking)	NIIN 7510-00-264-4612 -or- 7510-00-223-6676 (or equivalent)
As Required	Unit, Wrist Seal	S-3321-2
As Required	Thread, Nylon, Size E, Class II, Green	8310-00-204-3884

Notes: 1. Wrist seal units will be available open pur chase during the second or third quarter 2005. To obtain the wrist seal unit please contact Mr. Michael Dilts, Vice President, Switlik Parachute Co., Inc., 1325 East State Street, P.O. Box 1328, Trenton, NJ 08607-1328.
Phone (609) 587-3300;
Fax (609) 586-6647.

NOTE

The neoprene wrist seal gasket on the new wrist seal unit can be fit to the aircrewmember either before or after attachment of the new wrist seal unit to the coverall.

5-81. Sizing/Fitting of the Wrist Seal Unit to the Aircrewmember. Wrist seals are one-size-fits all, trim-to-fit. The neoprene gasket end of the seal opening must be trimmed, 1/4 inch at a time, until an acceptable fit has been achieved. An acceptable fit is when the seal creates a watertight barrier around the wrist through complete range of motion of the hand about the wrist, without restricting blood flow to the hand, i.e., not too tight. If wrist seal sizing is required, proceed as follows:

NOTE

Sharp, long bladed shears are recommended for sizing of wrist and neck seals. Use extreme caution to avoid nicking the seal. The best techniques is to cut in one motion and avoid repeated small snips.

The neoprene wrist seal gasket opening is very narrow when manufactured in order to accommodate very small wrist sizes. It may not be possible for the aircrewmember to don until some initial trimming is done in accordance with step 2.

1. Have aircrewmember don the wrist seal unit if possible, (see note above), and observe the overall fit of the neoprene gasket of the wrist seal unit on the aircrewmember's wrist. Have the aircrewmember doff the wrist seal unit and if the neoprene wrist seal gasket was too tight, trim the wrist seal 1/8 to 1/4 of an inch at a time. Trimming increments shall not exceed 1/4 inch at a time.

2. After trimming seal, have aircrewmember don carrier to determine seal restriction and water-sealing characteristics. Make any adjustments in accordance with step 1 until the neoprene wrist seal gasket fits the aircrewmember.

3. Verify inspection and/or repair and/or fit.

4. Document in accordance with COMNAVAIRFORINST 4790.2.

5-82. Removal and Replacement of Wrist Seal Unit. To replace a damaged wrist seal unit with a new wrist seal unit proceed as follows:

1. Lay coveralls on a flat surface and turn coverall sleeve inside out. OTS-600 coveralls are not turned inside out.

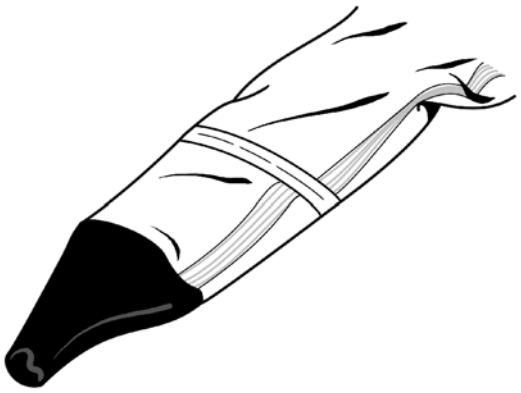

Step 1 - Para 5-82

CAUTION

Use caution when removing the seam tape as damage can occur to the coverall fabric if you try to remove the tape without sufficiently heating the seam tape.

2. Remove old seam tap from wrist seal unit/coverall sleeve by softening adhesive with heat sealer or heat gun and peeling tape gently away from the coverall.

3. Remove old wrist seal unit by cutting and removing the attachment seam stitches with scissors or knife being careful not to damage the coverall fabric.

Step 3 - Para 5-82

4. Slide the new wrist seal unit up into the sleeve of the coverall (neoprene wrist seal gasket first) so that right sides are together and raw edge circumference of the sleeve and wrist seal unit are aligned. Ensure the seam of the coverall sleeve is slightly offset from, but next to, the seam on the wrist seal unit.

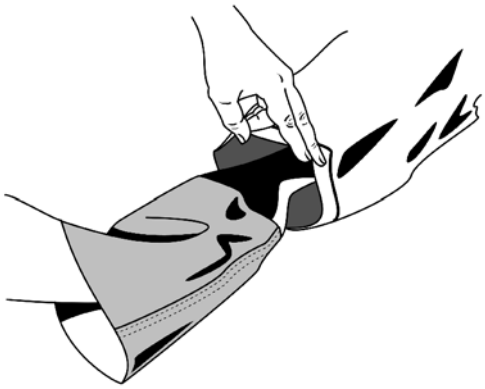

Step 4 - Para 5-82

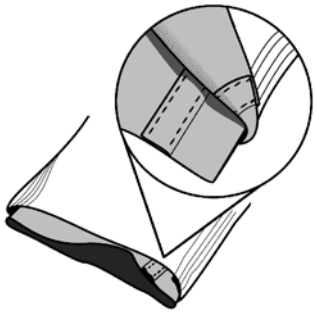

Step 4a - Para 5-82

CAUTION

High temperature resistant thread shall be used unless not available in supply. High temperature resistant thread does not propagate flame; nylon thread does.

5. Due to slight difference in circumference of coverall sleeve and wrist seal unit openings, alignment marks shall be added to both items before sewing. Make marks at front, back and both sides, equally spaced around circumference of both openings. It may be necessary to manually induce an uneven feeding of materials into sewing machine in order to compensate for differences in sleeve and wrist seal unit opening circumferences, thereby minimizing pleats or puckers.

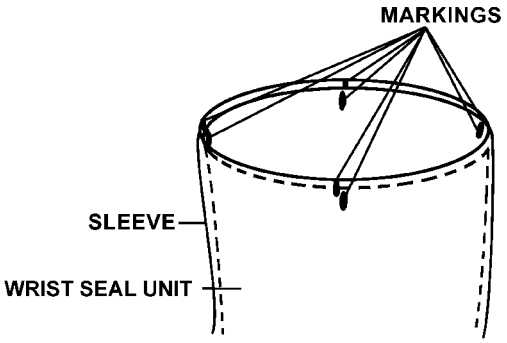

Step 5 - Para 5-82

6. Beginning at the front of the sleeve, with sleeve and wrist seal unit alignment marks matched, attach wrist seal unit with one row of stitches, 3/8 inch from cut edges, 5 to 7 stitches per inch using nylon size E thread. Overlap stitching 1/2 inch. Do not backstitch.

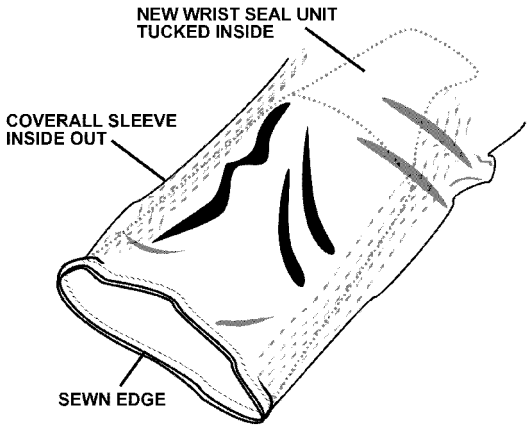

Step 6 - Para 5-82

7. After removing suit from sewing machine, pull wrist seal unit out through the sleeve opening, exposing cut edges of seam. Ensure the seams are together but offset slightly and that the stitching is 3/4 from the edge.

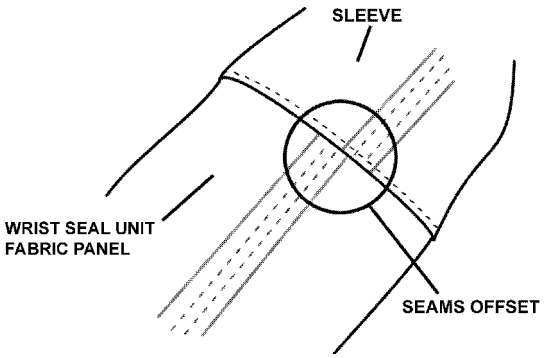

Step 7 - Para 5-82

8. Turn right side out. Press seam to one side and topstitch in place, 1/4 inch from seam line.

9. Verify repairs.

10. Forward coveralls to I-Level for application of seam tape in accordance with paragraph 5-68 and the leak check in accordance with paragraph 5-55 or 5-56.

11. Verify inspection and/or repair and/or fit.

12. Document in accordance with COMNAVAIR-FORINST 4790.2.

5-83. (A/P22P-6 SERIES ONLY) REPLACEMENT OF NECK SEAL. To replace the neck seal, proceed as follows:

Materials Required

Quantity	Description	Reference Number
As Required	Tape, Seam, 1 1/2-Inch	NIIN 01-193-0469
	-or-	
	Tape, Seam, 7/8-Inch	NIIN 01-189-6361
As Required	Thread Nylon, High Temperature Resistant	MIL-T-83193 NIIN 01-130-6245
	-or-	
As Required	Thread, Nylon Size E, Type II Sage Green/Olive Drab	V-T-295 NIIN 00-204-3884 or equivalent
As Required	Adhesive, Polyurethane (Note 1 and 3)	UR-1092 NIIN 01-447-8206
1	Roller, Hand	GGG-R-00620 NIIN 00-243-9401
1	Pencil, China Marking	SS-P-196
1	Chalk	SS-C-266
1	Neck Seal, Anti-Exposure (CWU-62A/P, CWU-62B/P, or CWU-62C/P only)	1725AS102-4 NIIN 01-312-3143 (Note 2)
As Required	Methyl Ethyl Ketone	TT-M-261 NIIN 00-823-8052 NIIN 00-687-8429 or equivalent
As Required	Emery Paper	—

Notes:
1. Adhesives may come from supply that contain both a base adhesive and an accelerator. Mixing of the accelerator with the base adhesive is not recommended for use on any items requiring adhesive in this manual. Use only the base adhesive.
2. The cotton-flocked neck seals, used on the CWU-62/P, are no longer being procured. Defective neck seals may continue to be replaced with any cotton-flocked seals available locally. However, it is preferable to replace all neck seals with the new latex rubber seal. Once the latex seal has been installed, the coverall should be redesignated as CWU-62A/P, CWU-62B/P, or CWU-62C/P as applicable.
3. Activities than cannot obtain UR-1092 Polyurethane adhesive via GSA/normal supply channels can order it via Michael C. Dilts, Vice President, Switlik Parachute Co., Inc., 1325 East State Street, PO Box1328, Trenton, NJ 08607-1328 (609)0587-3300; fax (609)586-6647.

1. Before installing or replacing neck seal on the CWU-62/P Series coverall inspect each seal in accordance with paragraph 5-75.

NOTE

The neck seal will be difficult to lay flat due to the fact that the seal is molded into a bellow shape. If cracks or deterioration are identified discard seal. Neck seal shall be used only after passing inspection regardless of expiration date on package.

2. Remove as much as possible of seam tape covering neck seal to coverall seam by peeling the tape off.

3. Remove old neck seal by cutting and removing two rows attachment seam stitches being careful not to damage coverall fabric.

NOTE

Very small necks that require an even smaller neck seal than what comes from the manufacturer can be fabricated from the manufacturers "untrimmed" seal that start out longer and narrower before the manufacturer trims them for shipping. If this smaller size is needed be sure to tell FORMCO (330-966-2111) when ordering the neck seal that you want an untrimmed neck seal.

4. (CWU-62/P only) Select correct size replacement neck seal.

5. (CWU-62A/P, CWU-62B/P, or CWU-62C/P only) Select trim line on lower edge of seal corresponding to suit size (Table 5-10) and trim along molded line.

Table 5-10. Replacement Neck Seal (CWU-62A/P, CWU-62B/P, or CWU-62C/P)

Trim Line	Suit Size
1	1, 2, 3
2	4, 5, 6
3	7, 8, 9
4	10, 11, 12

Notes: 1. Trim line 1 is that closest to the upper neck opening and trim line 4 is that closest to the lower edge of the seal. These trim lines include seam allowance.

NOTE

Due to slight differences in circumferences of neck seal and neck opening of coverall, alignment marks should be added to neck seal and to coverall fabric (for CWU-62/P series coveralls). Make alignment marks at center front, center back, and both sides equally spaced around circumference of neck seal. To aid in alignment, additional marks may be made between center front and each side, as well as between center back and each side to total 8 marks. CWU-62A/P, CWU-62B/P, and CWU-62C/P neck seal has alignment marks molded into it at center front, both sides and a double mark indicating the center back of seal. When attaching correct size neck seal to neck opening of coverall, the dull side of seal shall face toward the inside (next to the skin) and the shiny side should face out. It may be necessary to manually induce an uneven feeding of materials into sewing machine in order to compensate for differences in seal and coverall opening circumferences, thereby eliminating pleats and puckers in the material. Pleats and puckers are not acceptable.

6. Turn coverall inside out.

NOTE

Refer to latest revision of ASTM-D-6193 for seam types.

7. Attach seal, using seam type LSq-2 (Figure 5-20). First row of stitches shall be placed 3/8 inch from cut edge of fabric. Nomex thread is suggested due to the needle heating up as it passes through the rubber causing nylon threads to break. Otherwise the needle will need to be cooled while sewing.

8. After folding coverall fabric back sharply over stitching, a second row of stitches shall be placed 1/4 inch from fold line.

9. Using emery paper (sandpaper), lightly scuff the surface of the neck seal one inch from the seam.

10. Clean surface of latex neck seal with MEK.

11. Measure from the sewn edge toward the neck seal outer edge one inch and mark circumference of the neck seal using a grease pencil.

NOTE

Seam tape will not adhere properly to latex neck seal without adhesive.

Do not use an accelerator (catalyst) with this adhesive.

Ensure the adhesive is not overage.

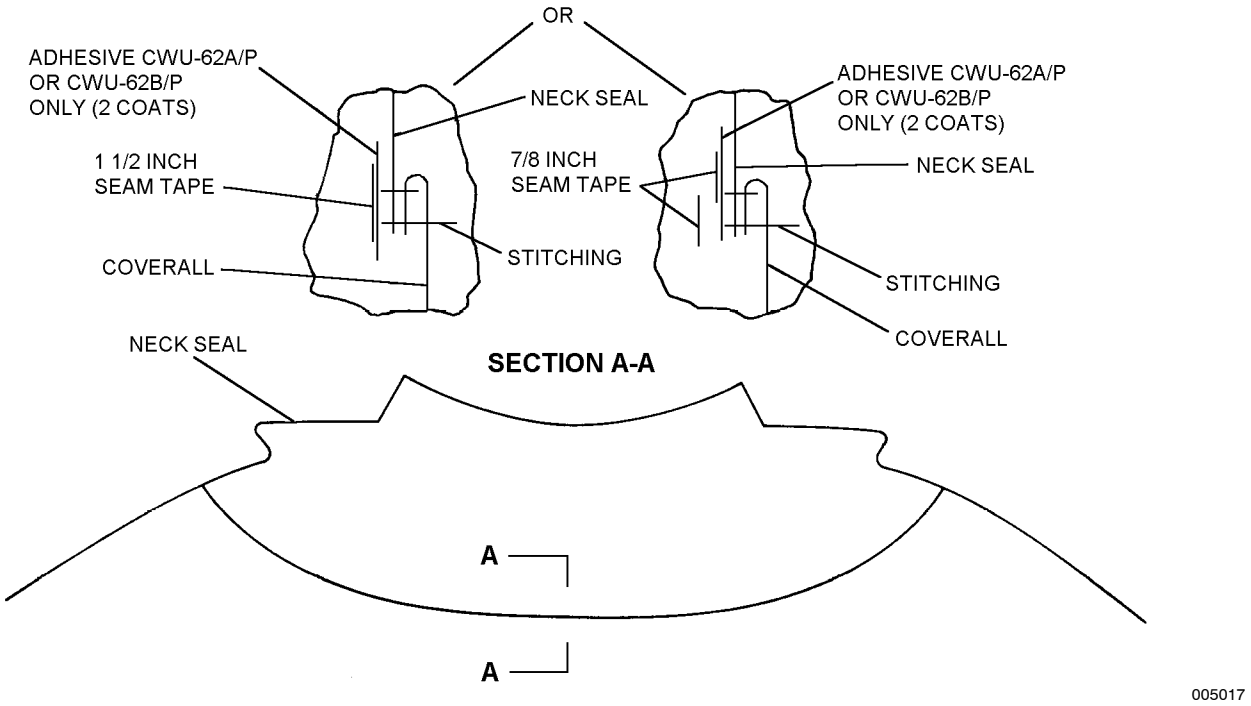

Figure 5-20. Attachment Seam (LSq-2), Neck Seal to Coverall

12. (CWU-62 Series) Apply adhesive to latex neck seal as follows:

NOTE

Do not use masking tape to outline the one-inch area of the neck seal to be scuffed. The polyurethane adhesive will stick to the masking tape and make clean removal of the masking tape impossible.

a. Apply a liberal coat of adhesive to the neck seal surface between the trimmed edge and the grease pencil mark applied in step 11.

b. Allow 5 to 10 minutes for adhesive to dry, then apply a second liberal coat of adhesive to the neck seal surface between the trimmed edge and the grease pencil mark applied in step 11.

NOTE

Application of seam tape (step 13) is time sensitive to step 12c.

c. Allow 15 minutes for second coat of adhesive to dry, then swab adhesive surface of latex neck seal with a cloth dampened with MEK. Note time of completion.

NOTE

To achieve optimum tack, allow excess solvent to “flash off” for 15 to 30 seconds.

d. When aggressively tacky, fold sewn neck seal section toward the neck seal outer edge, joining the sewn edge of the neck seal to the neck seal by a single fold.

e. Using a hand roller, remove any folds or pleats from the neck seam adhesive area to ensure a smooth finish.

NOTE

Do not begin next step until one hour has elapsed since completion of step 12c.

13. Apply seam tape to inside of seam. If 7/8-inch seam tape is used, two layers of seam tape shall be applied in order that stitching and cut edges of material are overlapped a minimum of 1/4 inch (Figure 5-20). Overlap ends of seam tape 1 inch. Tape shall extend 1/4 inch beyond folded edge of material.

14. Verify inspection and/or repair and/or fit.

15. Document in accordance with COMNAVAIRFORINST 4790.2.

5-84. O-LEVEL PROCEDURES FOR INITIAL FITTING AND REPLACEMENT OF THE NECK SEAL WITH THE NECK SEAL UNIT. The aramid fabric panel of the neck seal unit allows attachment to the coverall neck by sewing and heat seam taping aramid cloth to aramid cloth thereby eliminating the need to use adhesives in the replacement of neck seals. The neck seals units are dual manufactured, i.e. they are constructed of a flame resistant aramid fabric panel and a latex bellows-shaped gasket. Together the latex bellows-shaped gasket and the aramid fabric panel are referred to as the neck seal unit (Figure 5-21). The neck seal unit can be used on any of the CWU-62/P series coveralls and the CWU-74/P series coveralls to replace a damaged latex neck seal. The latex neck seals are trim-to-fit and must be trimmed to the individual aircrewmember. Initial fitting and replacement of a damaged neck seal using the neck seal unit shall be accomplished as outlined below.

Materials Required

Quantity	Description	Reference Number
As Required	Chalk	NIIN 7510-00-170-9315 -or-
As Required	Pencil, Wax (China Marking)	NIIN 7510-00-264-4612 -or- 7510-00-223-6676 (or equivalent)
As Required	Unit, Neck Seal	S-3321-1 (Note 1)
As Required	Thread, Nylon, Size E, Class II, Green	8310-00-204-3884
As Required	Seal, Flyers	8475-01-312-3143 (as template only)

Notes: 1. The neck seal unit will be available open purchase during the second or third quarter 2005. To obtain the neck seal unit, please contact Mr. Michael Dilts, Vice President, Switlik Parachute Co., Inc., 1325 East State Street, P.O. Box 1328, Trenton, NJ 08607-1328. Phone (609) 587-3300; Fax (609) 586-6647.

NOTE

The bellows-shaped latex neck seal gasket on the new neck seal unit can be fit to the aircrewmember either before or after attachment of the new neck seal unit to the coverall.

5-85. Sizing/Fitting of the Neck Seal Unit to the Aircrewmember. Neck seals may be trimmed at the initial fitting. If no excessive seal restriction exists, and seal fit is acceptable to the aircrewmember, then do not trim the seal. Neck seals shall fit snugly and remain in direct contact with the neck through all normal head movements. Neck seals are manufactured with the trim lines spaced 1/4 inch apart pre-molded into the latex rubber of the neck seal.

CAUTION

Excessive trimming could result in loose seals that leak and necessitate replacement. Trim neck seal with extreme caution; a smooth trim line is essential. Avoid nicking latex, as this will result in tearing the seal when donning and doffing.

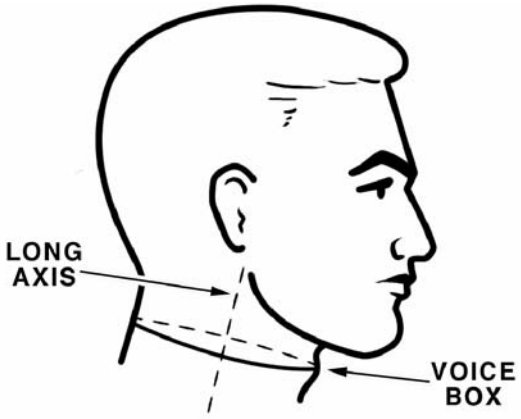

Figure 5-21. Detail of Where the Neck Seal Should Fit on the Aircrewmember

1. Have aircrewmember don the new neck seal unit and observe the overall fit of the latex neck seal gasket of the neck seal unit on the aircrewmember's neck. Have the aircrewmember doff the neck seal unit and if the latex neck seal gasket was too tight, trim the latex neck seal gasket using the pre-molded trim lines on the neck seal using sharp, long bladed shears. Trimming increments shall not exceed one pre-molded trim line at a time.

2. After trimming seal, have aircrewmember don the neck seal unit to determine seal restriction and water-sealing characteristics. If neck seal is still too tight continue to trim the neck seal 1/4 inch (or one trim line) at a time until the neck seal fits the aircrewmember.

3. Verify fitting.

4. Document in accordance with COMNAVAIRFORINST 4790.2.

CAUTION

Do not attempt the removal and replacement of the latex bellows shaped neck seal with the neck seal unit unless you have a new latex neck seal on hand to use as a template for marking the sewing line on the neck seal unit. Latex neck seal (P/N 1725AS102-4, NIIN 8475-01-312-3143) can be obtained via normal supply channels. Although the latex neck seal to be used as the template is a one size fit to trim be aware that each neck seal can be trimmed to fit the neck opening of 4 different size groups coveralls. Ensure that the template you use has been trimmed to fit the size coverall that needs a new neck seal unit, see Table 5-10. The best practice is to have 4 new latex neck seals, one trimmed to each of the 4 size groups listed in Table 5-10 and mark it as the permanent template for neck seal replacement.

5-86. Removal and Replacement of the Latex or Flocked or Neck Seal Unit with a New Neck Seal Unit. To replace a damaged neck seal with a new neck seal unit proceed as follows:

NOTE

After removal of the neck seal the raw edges of the coverall neckline opening will be exposed. The size and shape of the neckline opening in the coverall and the size and shape of the replacement neck seal unit are different dimensions and care must be taken to mark the new neck seal unit using a template (new latex bellows shaped neck seal) prior to attaching the neck seal unit to the coverall neckline opening.

1. Turn coveralls inside out and lay coveralls on a flat surface, face up. OTS-600 coveralls are not turned inside out.

CAUTION

Use caution when removing the seam tape as damage can occur to the coverall fabric if you try to remove the tape without sufficiently heating the seam tape.

2. Remove old seam tape from latex neck seal/coverall fabric by softening adhesive with heat sealer or heat gun and peeling tape gently away from the coverall.

3. Remove old neck seal by cutting and removing the attachment seam stitches with sharp, long bladed shears, being careful not to damage the coverall fabric.

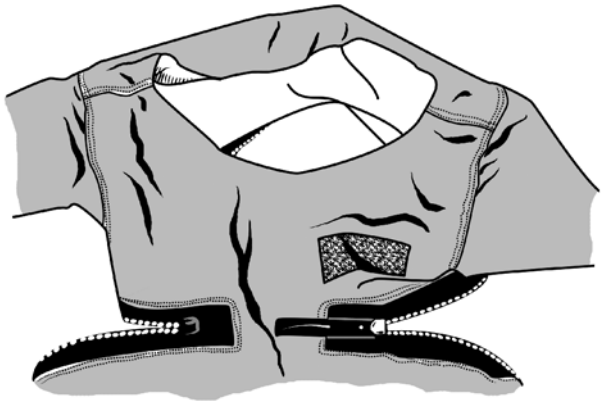

Step 3 - Para 5-86

4. To aid in aligning the neck seal unit to the coverall neck seal opening during placement and sewing, draw alignment marks on the coverall neckline opening at the center front, center back center right (right shoulder seam) and center left (left shoulder seam).

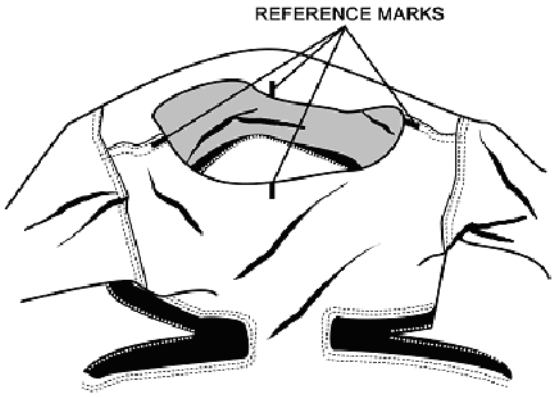

Step 4 - Para 5-86

5. Fold neck seal assembly in 4 equal parts. Mark center front, left and right shoulder of fabric.

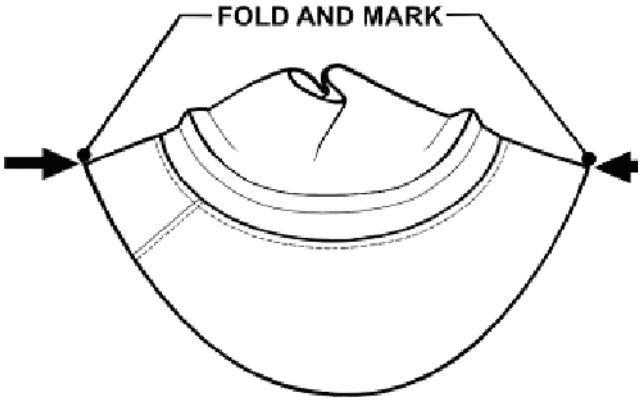

Step 5 - Para 5-86

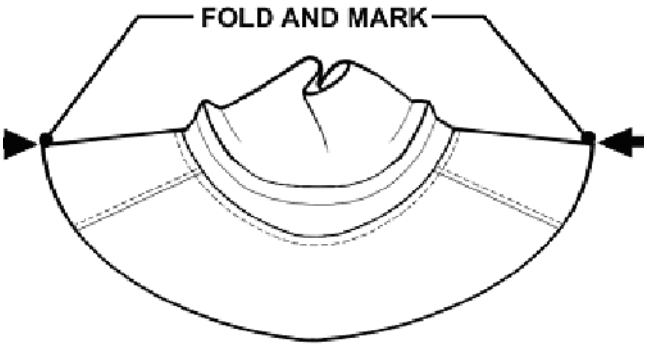

Step 5a - Para 5-86

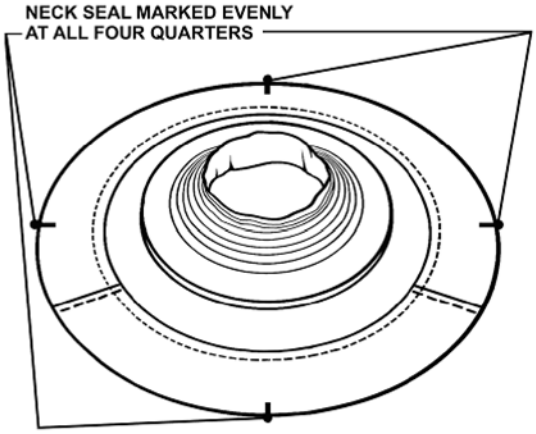

Step 5b - Para 5-86

6. Choose the correct size latex neck seal (P/N 1725AS102-4) template and draw the sewing line onto the new neck seal unit . Ensure trim line on lower edge of latex neck seal template corresponds to coverall size indicated in Table 5-10.

CAUTION

Ensure latex neck seal template used is the correctly trimmed neck seal. To ensure the correct size see Table 5-10 and compare suit size to neck seal pre-molded trim size. Failure to obtain the correct size template will result in an ill-fitted coverall that will have to be redone.

NOTE

The shape of unattached latex neck seals is manufactured so that the back of the latex neck seal is wider than the front. When laying the latex neck seal template onto the neck seal unit that the front and back of the seal are aligned correctly.

7. Lay the template (latex neck seal P/N 1725AS102-4) directly on top of the neck seal unit, matching, as closely as possible the 4 pre-molded alignment marks on the latex neck seal to the 4 alignment marks on the neck seal unit. The elongated ends of the neck seal are aligned at the left and right with the shoulder seams and the front and back center marks are matched as closely as possible. Using the latex neck seal as the template draw around the circumference of the template directly on to the neck seal unit. Remove the template and put aside.

NOTE

The neck seal unit will be impossible to lay flat due to the fact that the aramid fabric on the neck seal unit is shaped and tapered to fit the circumference of the neck seal opening. When performing this step manipulate the neck seal unit and the template as well as you can in order to get a clean reference line for sewing the neck seal unit to the coveralls.

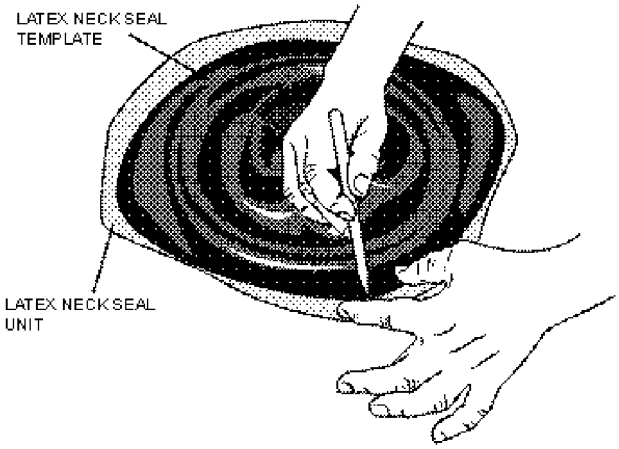

Step 7 - Para 5-86

NOTE

Circumference of neck seal and neck opening may not be the same. When sewing the neck seal to the coverall, it may be necessary to stretch the curves of the neck seal fabric slightly to avoid pleats and puckers in the seam. Pleats and puckers will result in leaks.

8. Place neck seal unit inside the neck seal opening (right sides together) so that the 4 alignment marks are matched; front, back, left and right. Starting at one of the alignment marks sew neck seal unit to coverall neck opening along the sewing line drawn in step 7 (line drawn in step 7 should be just visible at the raw edge of the coverall opening). Sew using 5-7 spi, seam type LSq, and allow 3/8 inch seam gauge.

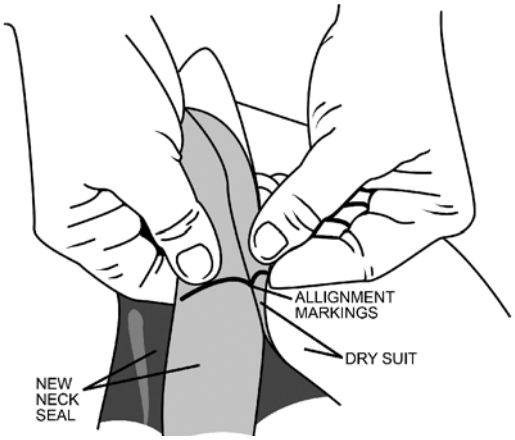

Step 8 - Para 5-86

9. After removing coveralls from sewing machine trim excess material from neck seal unit so that neckline is clean and even.

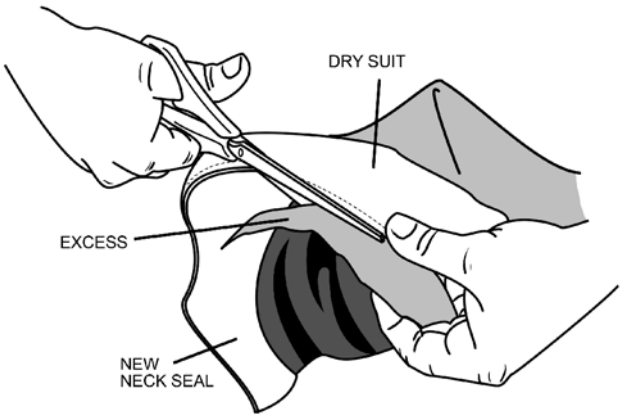

Step 9 - Para 5-86

10. Turn right side out. Press seam away from neck. Topstitch in place, 1/4 inch from seam line.

11. Forward coveralls to I-Level for application of seam tape in accordance with paragraph 5-68 and the leak check in accordance with paragraph 5-55 or 5-56.

12. Verify all repairs with either the air leak or water leak test. If no leaks are found coverall shall be returned RFI.

13. Document in accordance with. COMNAVAIR-FORINST 4790.2.

5-87. (A/P22P-6 SERIES ONLY) INCREASING COVERALL LEG LENGTH. Increasing coverall leg length shall be accomplished for those individuals whose leg length does not allow adequate sock and coverall length allowances as stated in paragraph 5-36, steps 4 through 7; or, when too much fabric has been removed during sock replacement. In these extreme cases, coverall legs shall be lengthened as follows:

Materials Required

Quantity	Description	Reference Number
As Required	Cloth, Special	MIL-C-85637 NIIN 01-196-0076
As Required	Thread, Nylon, Green, Size E	V-T-295 NIIN 00-244-0609 or equivalent
1	Roller, Hand	GGG-R-00620
As Required	Tape, Seam, 1 1/2-Inch	NIIN 01-193-0469
	-or-	
	Tape, Seam, 7/8-Inch	NIIN 01-189-6361
As Required	Thread, Nylon, High Temperature Resistant	MIL-T-83193 NIIN 00-130-6245

1. Have aircrewmember don complete A/P22P-6 Series assembly including PCU-Series torso harness, if applicable, and proper size SRU-25/P or CWU-75/P socks.

2. Fold top 2 inches of sock down, forming a temporary cuff.

3. Mark inseam of coverall at a point midway between wearer's knee and top of folded sock.

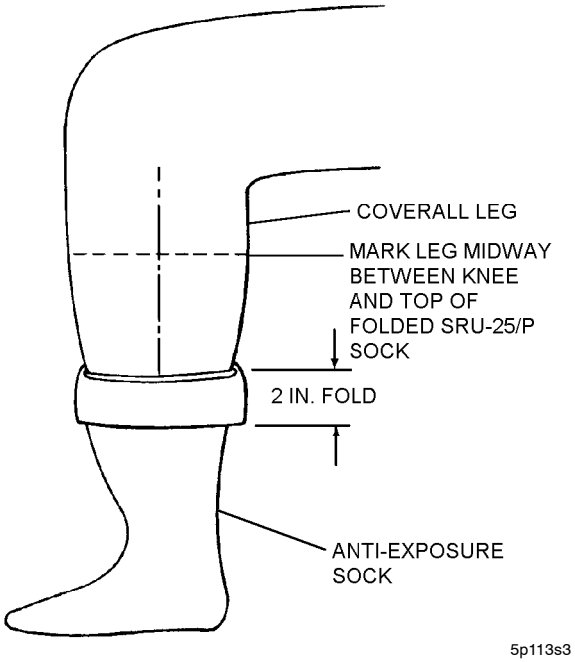

Step 3 - Para 5-87

4. Measure from inseam midway mark to 3 inches below the sock's temporary fold line. This measurement will be used in cutting material for leg extension.

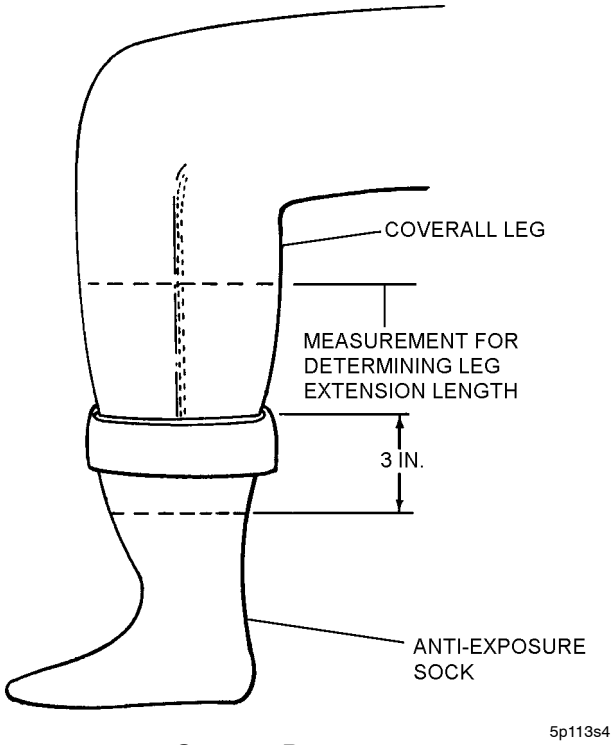

Step 4 - Para 5-87

5. Have aircrewmember doff socks and coveralls. Cut coverall legs off at inseam mark, ensuring cut is made straight across leg.

6. Measure circumference of bottom of coverall leg, and add 3/4 inch to this measurement for seam allowance. This measurement is second dimension used in cutting material for extension.

7. Cut a rectangular piece of fabric using dimensions arrived at in steps 4 and 6. The step 4 measurement (leg length) shall be marked off parallel with selvage edge or warp thread direction of fabric. The step 6 measurement (leg circumference) shall be marked off in fill thread direction or perpendicular to selvage edge. This will ensure leg extension thread direction will coincide with coverall leg construction.

8. Join short sides of this material by folding in half (face to face) and sewing one row of stitches (5 to 7 stitches per inch), 1/4 inch from cut edges; then apply a row of top stitching, 1/4 inch from folded seam.

9. Attach extension to coverall leg with two rows of stitching, (LSq-2 seam) as shown. Place leg extension construction seam adjacent to, but not directly over, coverall leg inseam. Make first row of stitches 1/4 inch from cut edges, and top stitching 1/4 inch from folded seam. Stitching shall be 5 to 7 stitches per inch.

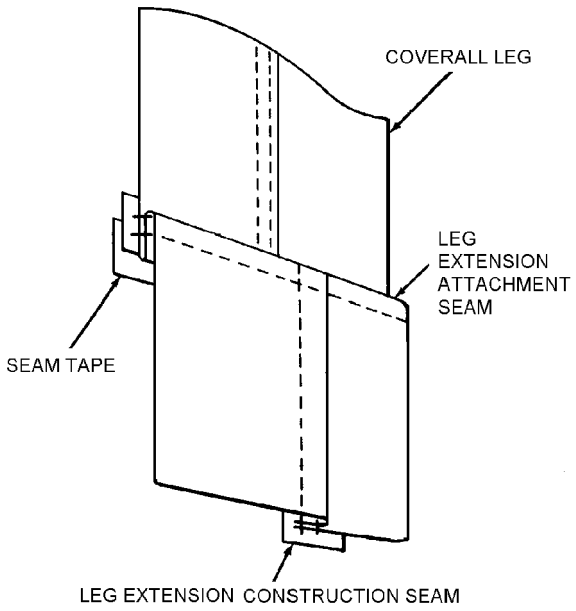

5p113s9

Step 9 - Para 5-87

10. Apply heat sealed seam tape to the inside of extension construction and attachment seams. If using 1 1/2-inch tape, use one layer; if using 7/8-inch tape, use two layers.

11. Refer to paragraph 5-36 for SRU-25/P or CWU-75/P sock attachment instructions.

12. After completing leg extensions, check for proper fit.

13. Verify inspection and/or repair and/or fit.

14. Document in accordance with COMNAVAIRFORINST 4790.2.

5-88. (A/P22P-6 SERIES ONLY) INCREASING COVERALL SLEEVE LENGTH. Increasing coverall sleeve length shall be accomplished for those individuals whose arm length does not allow adequate sleeve length allowances, or when too much fabric has been removed during wrist seal replacement. In these extreme cases, coverall sleeves shall be lengthened as follows:

Materials Required

Quantity	Description	Reference Number
As Required	Cloth, Special	MIL-C-85637 NIIN 01-196-0076
As Required	Thread, High Temperature Nylon	MIL-T-83193 NIIN 00-130-6245
	-or-	
As Required	Thread, Nylon, Sage Green, Size E	V-T-295 NIIN 00-204-3884
	-or-	
	Thread, Nylon O.D. Type II CL A	NIIN 00-244-0609
1	Roller, Hand	GGG-R-00620 or Commercial
As Required	Tape, Seam, 1 1/2-Inch	NIIN 01-193-1469
	-or-	
	Tape, Seam, 7/8-Inch	NIIN 01-189-6361

1. After the coverall has been fit, and the need for sleeve extension has been determined, have the aircrewmember doff the coverall.

2. (CWU-62/P and CWU-62A/P only) Mark sleeve underarm seam at a point midway between the end of the slide fastener and top of hook and pile tape.

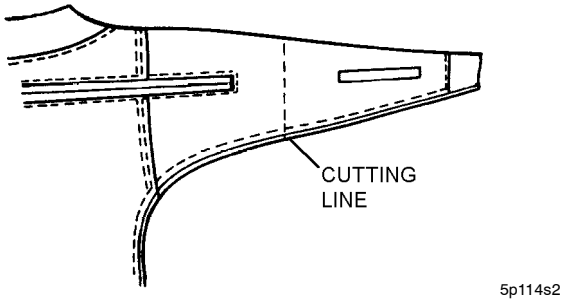

Step 2 - Para 5-88

3. (CWU-62B/P and CWU-62C/P only) Mark sleeve underneath seam at a point midway between the shoulder seam and the top of the wrist seal where it is attached to the fabric

4. Cut sleeve off at inseam mark, ensuring cut is made straight across sleeve.

5. Have aircrewmember don coverall and sleeve with arm extended to side. Measure widest point of gap between cut edges and add 1 inch to this measurement. This total measurement will be used in cutting material for sleeve extension.

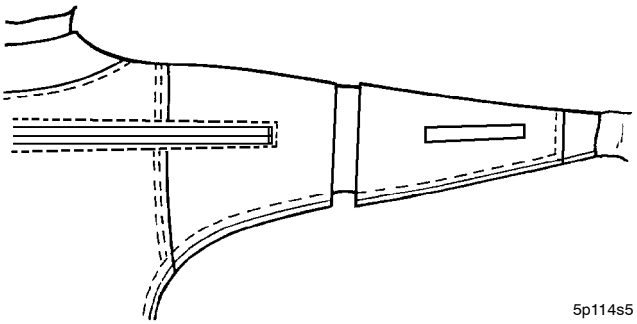

Step 5 - Para 5-88

6. Have aircrewmember doff coverall and sleeves.

7. Measure circumference of cut edge of sleeve and add 3/4 inch to this measurement for seam allowance. This measurement is second dimension used in cutting material for extension.

8. Cut a rectangular piece of fabric using dimensions arrived at in steps 5 and 7. The step 5 measurement (sleeve length) shall be marked off parallel with selvage edge or wrap thread direction of fabric. The step 7 measurement (sleeve circumference) shall be marked off in fill thread direction or perpendicular to selvage edge. This will ensure sleeve extension thread direction will coincide with coverall sleeve construction.

9. Join short sides of this material by folding in half (face to face) and sewing one row of stitches (8 to 10 stitches per inch), 1/4 inch from cut edges; then apply a row of top stitching, 1/4 inch from folded seam.

10. Attach extension to bottom half of sleeve with 2 rows of stitching, (LSq-2 seam) as shown. Place sleeve extension construction seam adjacent to, but not directly over sleeve underarm. Make first row of stitches 1/4 inch from cut edges, and top stitching 1/4 inch from folded seam. Stitching shall be 5 to 7 stitches per inch.

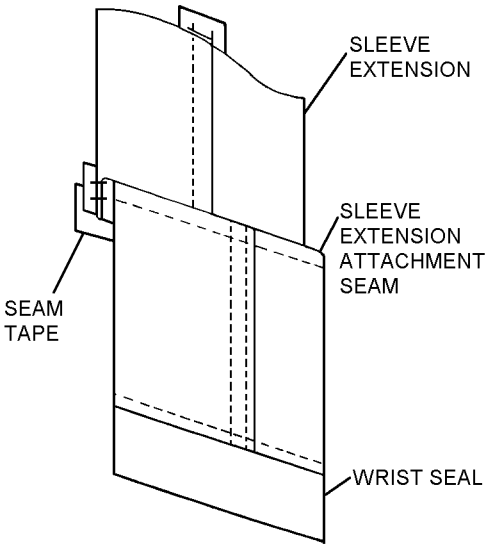

Step 10 - Para 5-88

11. Attach sleeve and extension to coverall as specified in step 10.

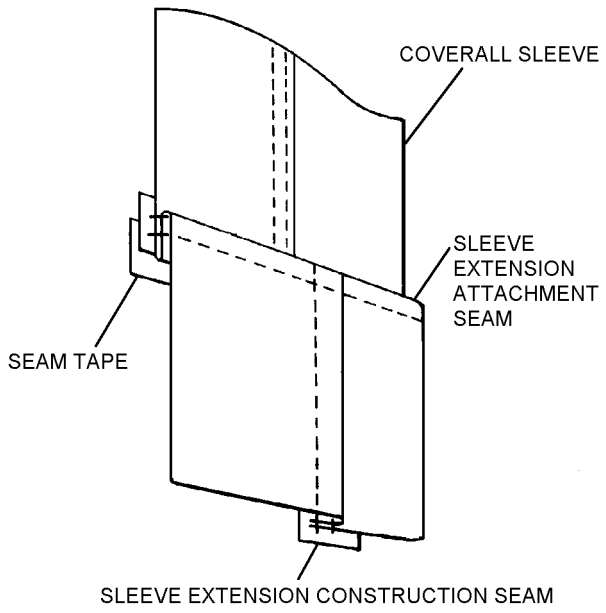

5p114s11

Step 11 - Para 5-88

12. Apply heat sealed seam tape to the inside of extension construction and attachment seams. If using 1 1/2 inch tape, use one layer; if using 7/8 inch tape, use two layers.

13. After completing sleeve extensions, check for proper fit.

14. Verify inspection and/or repair and/or fit.

15. Document in accordance with COMNAVAIR-FORINST 4790.2.

5-89. REPAIR OF CWU-62/P, CWU-79/P AND ARSD/MSD SERIES COVERALLS. Authorized patching shall be limited to the following:

NOTE

Total patched area shall not exceed 180 square inches.

5-90. Definitions. The following definitions shall be used throughout this section to identify the various functions being performed.

NOTE

All patches shall be cut one inch larger than area to be patched and shall be sewn to the inside of the coverall (white side) with the green side of the patch facing out. All edges and stitching shall be seam taped on the inside of the coverall.

1. Beyond Economical Repair (BER): That point at which a coverall would cost more to repair it than it would cost to replace it with a new coverall. This usually occurs when the coverall is reaching the end of its serviceable life but can also happen to newer coveralls that have been extensively damaged. Determination of BER should take into account the man-hours and materials that will be expended to repair the coverall. Although wage tables are not available for this calculation it is within the scope of the I-level technicians to use their judgement, experience and intuition when deciding how much repair is too much.

2. Patching: repairing a tear, rip, or hole by sewing a new piece of fabric or tape along the perimeters of the damage, then heat seal taping those sewn edges.

3. Porous Area: fabric that is visibly intact yet still leaks. During water test the criteria shall be: If one (1) drop of water falls from the underside of the coveralls in 10 seconds or less, the coverall shall be repaired. Coverall shall be repaired if during the air test a soap bubble forms twice in the same spot in 10 seconds or less.

4. Reinforcing: repairing a small tear, small rip, small hole or small porous area by heat seal tape alone.

5. Suit Panel: an individual section of the coverall, e.g., each sleeve, leg front, leg back, body (above crotch line and below neckline) front, or body back.

6. Original Construction Seam Tape: the original seam tape that was applied at the manufacturing plant in the construction of the coverall.

5-91. Damage Dimensions. The following are various dimensions to be used throughout this section when determining damage that can and cannot be repaired.

1. Hole: Round damage or puncture; an entire circular or elliptical shape missing from the fabric.

a. Small: Pinhole; less than 1/16 inch diameter.

b. Large: Less than 3 inch diameter.

2. Nick/Gouge/Pit: Damage in neoprene layer of a wrist seal.

a. Must be less than 1/2 inch in length.

3. Split/Crack: Linear damage at an edge through all layers of a wrist or neck seal.

a. Must be less than 1/2 inch in length.

4. Porous Area.

a. Small: Less than 1 inch diameter.

b. Large: Less than 7 inches by 7 inches. Patches over large porous areas cannot be within one inch of each other.

5. Rip: Linear damage; a long continuous cut with no other adjoining cuts.

a. Small: Up to 1 inch in length.

b. Large: Less than 10 inches in length.

6. Tear: "L" or "I" shaped damage; a long continuous cut with a short connected perpendicular cut at one or both ends.

a. Small: Up to a 1 inch long with 1/2 inch long cross-wise cut(s).

b. Large: Less than 7 inches in length with 1/2 inch long cross-wise cut(s).

5-92. Individual Component Repair Limits. The following are repair limits for the various components of the anti-exposure assembly.

1. Main suit panels:

a. May not have more than one large patched; tear, rip, hole or porous area.

b. May not have more than 25% of any panel area repaired by reinforcement and/or patching. This 25% being a cumulative total of previous and newrepairs. This 25% calculation excludes original seam taping and reinforcement.

2. Socks:

c. May be replaced individually or in pairs.

d. Any damage that intersects a seam is not repairable.

e. Pinholes, small porous areas, small tear, small rip up to 25% area of sock.

3. Seam Tape: Original Construction.

NOTE

Replacement of the original construction seam tape (and subsequent repaired/replaced seam tape) shall be at the discretion of the I-level facility doing the repairs. The 15 continuous inches stated below shall be considered flexible to a certain degree. The integrity of the coverall is the most important factor in deciding how much seam tape to replace. I-level technicians must use their experience and intuition when deciding how much seam tape is safe to replace. If the technician feels that 15 continuous inches in a certain section of the coverall is too much to replace for safety reasons, then don't replace the tape and condemn the coverall. If on the other hand the technician needs to replace 15 and one half inches and feels that it is safe to do so, then replace the tape and return the suit RFI.

a. Original Construction Seam Tape: Repair only 15 continuous inches.

b. Repairs on seam tape attaching components to the coverall (e.g. anti-exposure socks) are permissible only if the existing item (attached components) remains intact. If component part is damaged remove seam tape and replace component.

Section 5-3. Flyers Ruggedized Anti-Exposure Coveralls Assembly

THESE ANTI-EXPOSURE COVERALLS WILL NOT BE AVAILABLE TO THE FLEET VIA THE SUPPLY SYSTEM UNTIL THE FALL OF 2007. NAVAL MESSAGE WILL INFORM THE FLEET WHEN THE CWU-86/P AND -87/P COVERALLS ARE AVAILABLE.

5-93. GENERAL.

5-94. The CWU-86/P and CWU-87/P Flyers' Anti-Exposure Coveralls (Figure 5-22 through Figure 5-25 are constant-wear assemblies commonly known as "dry suits". The CWU-86/P is for men; the CWU-87/P is for women. The coveralls are constructed of a three-layered fabric (flame and heat resistant layer, a breathable layer, and a flame and heat resistant knit layer). Neoprene wrist and latex neck seals and waterproof socks are permanently attached to the coverall to create a watertight system. Figure 5-22 through Figure 5-38 and Table 5-11 through Table 5-17 on the following pages are placed at the beginning of this section for the convenience of the maintainer and to lessen the impact that large callouts have on the flow of the maintenance.

5-95. TECHNICAL DATA INDOCTRINATION PACKAGE.

5-96. Technical Data Indoctrination Packages (TDIP's) are videos that provide a visual introduction of a particular piece of survival equipment to the fleet. The TDIP contains helpful installation and repair procedures that the Aircrew Survival Equipmentmen can use as a reference for the Ruggedized Coverall. TDIP's are a good reference tool only; they are not to be used in place of or as a substitute for this manual. The TDIP package number for this coverall is TBD and can be found on the PMA202 website https://pma202.navair.navy.mil/.

5-97. CONFIGURATIONS.

5-98. The CWU-86/P and CWU-87/P Flyers' Anti-Exposure Coveralls are worn in conjunction with other components to comprise full antiexposure protection for aircrew. See Table 5-11.

NOTE

Sizing information for underclothing listed in Table 5-11 is contained in the applicable section of Chapter 3. For ordering information, refer to the NAVAIR Section H Allowance List (NAVAIR 00-35QH-2).

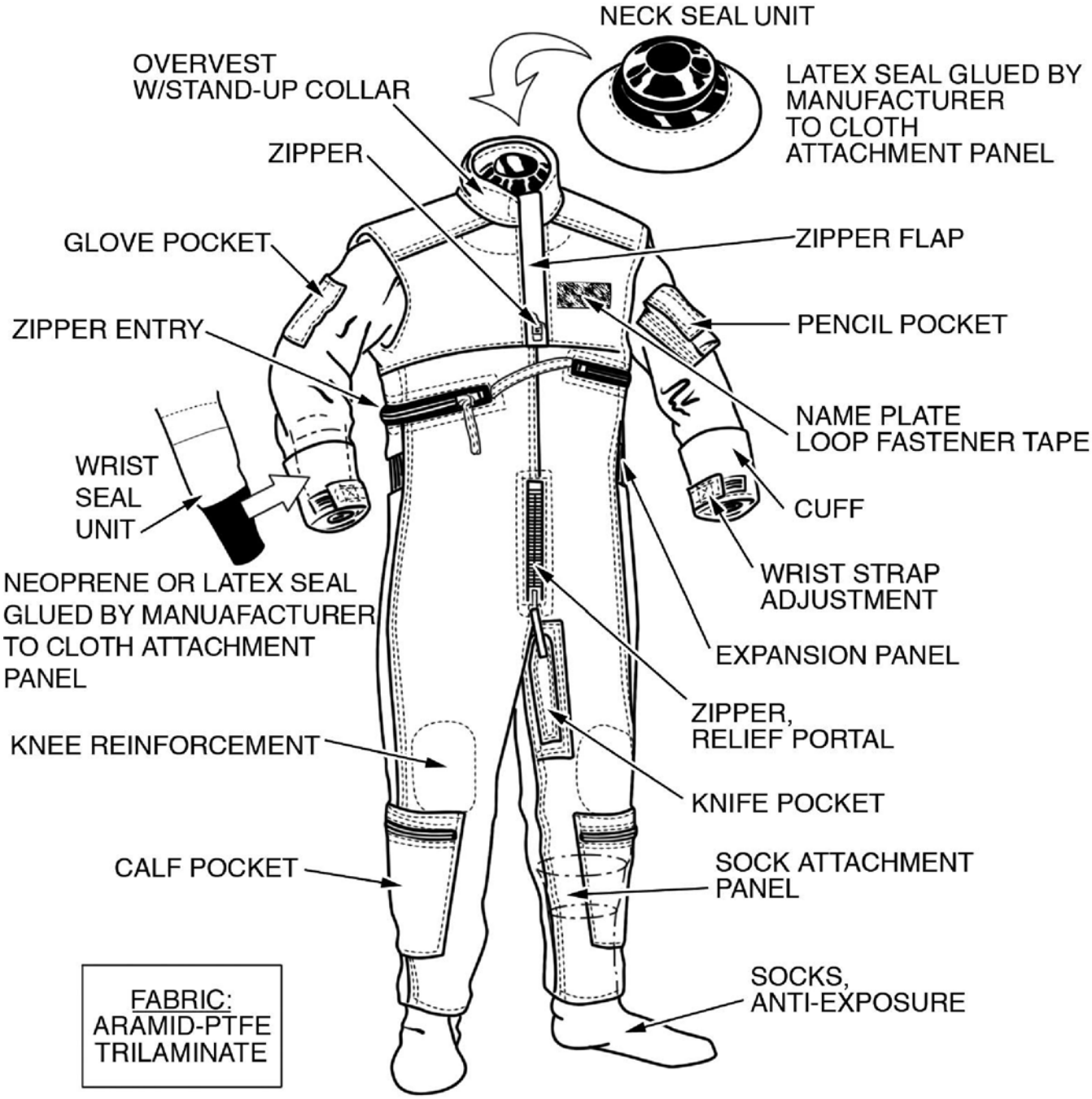

COVERALLS, FLYERS RUGGEDIZED ANTI-EXPOSURE

Figure 5-22. CWU-86/P Men's Flyers' Ruggedized Flyer's Coverall, Front View

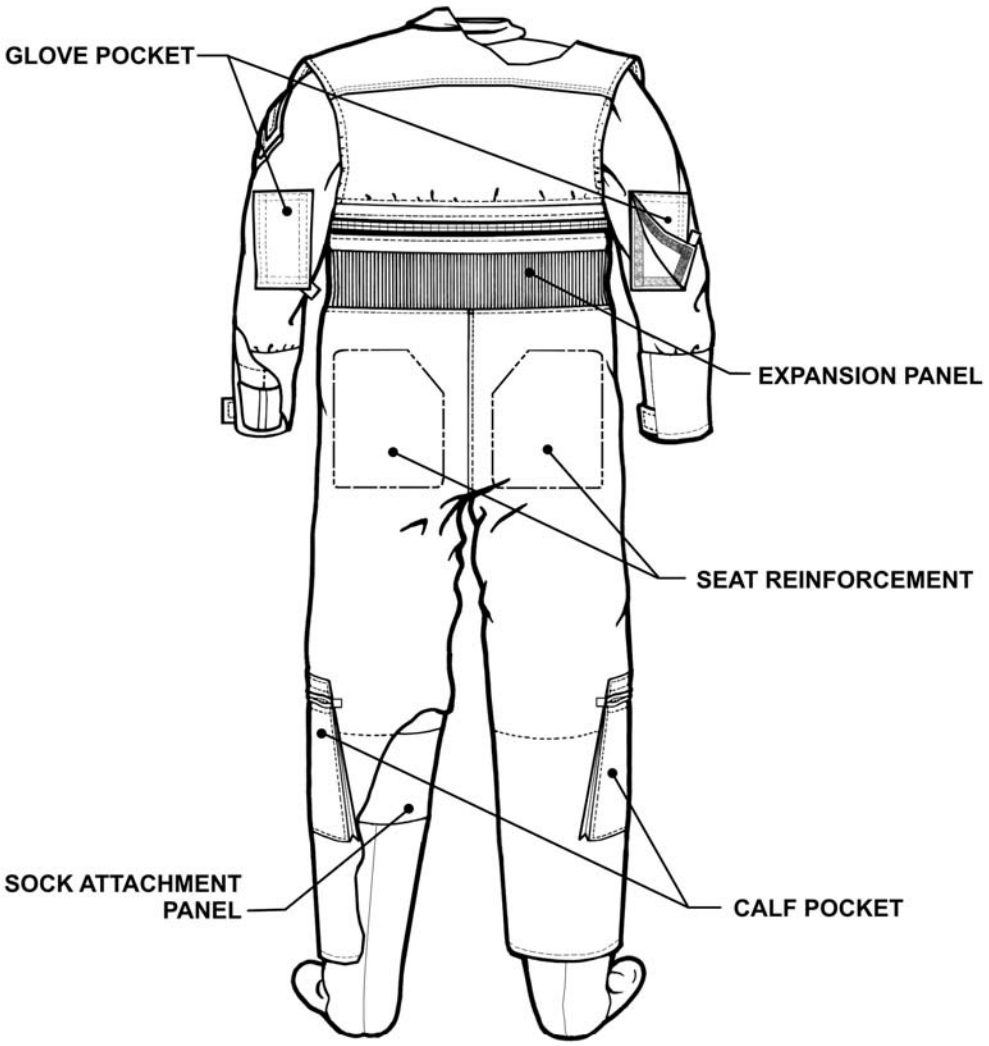

Figure 5-23. CWU-86/P Men's Flyers' Ruggedized Flyer's Coverall, Back View

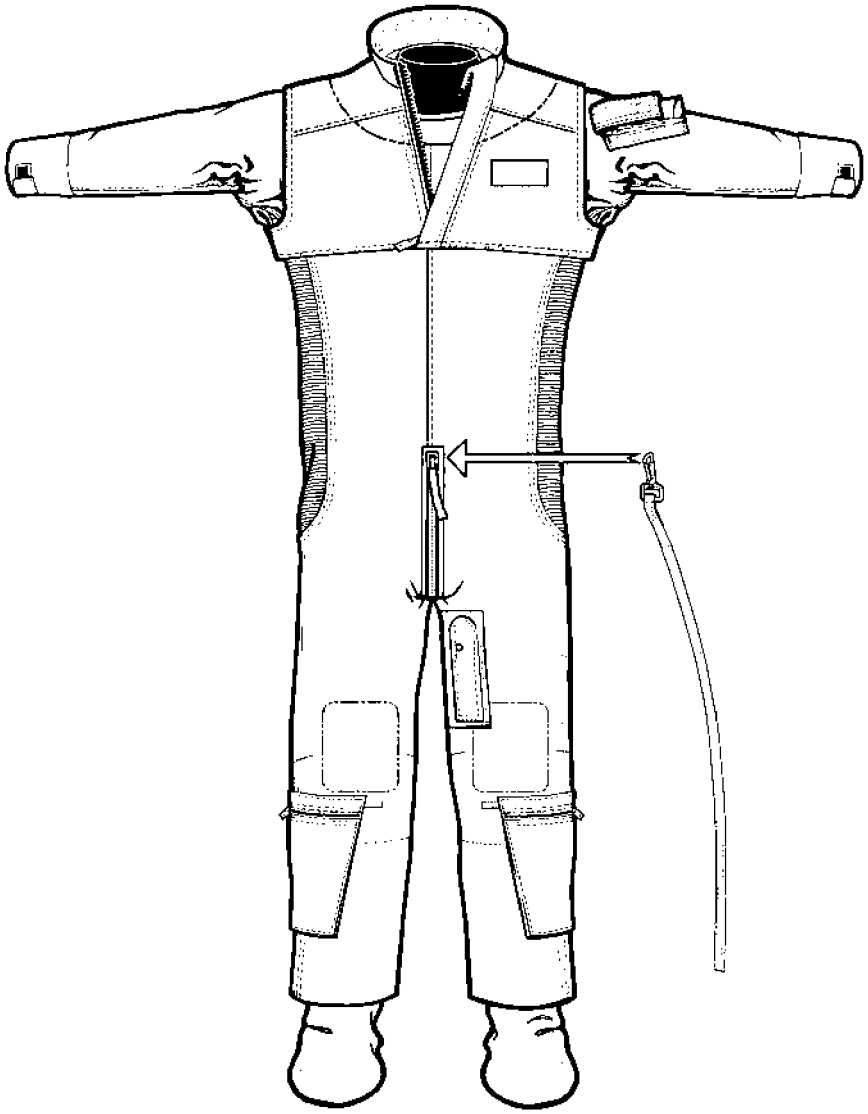

Figure 5-24. CWU-87/P Women's Flyers' Ruggedized Flyer's Coverall, Front View

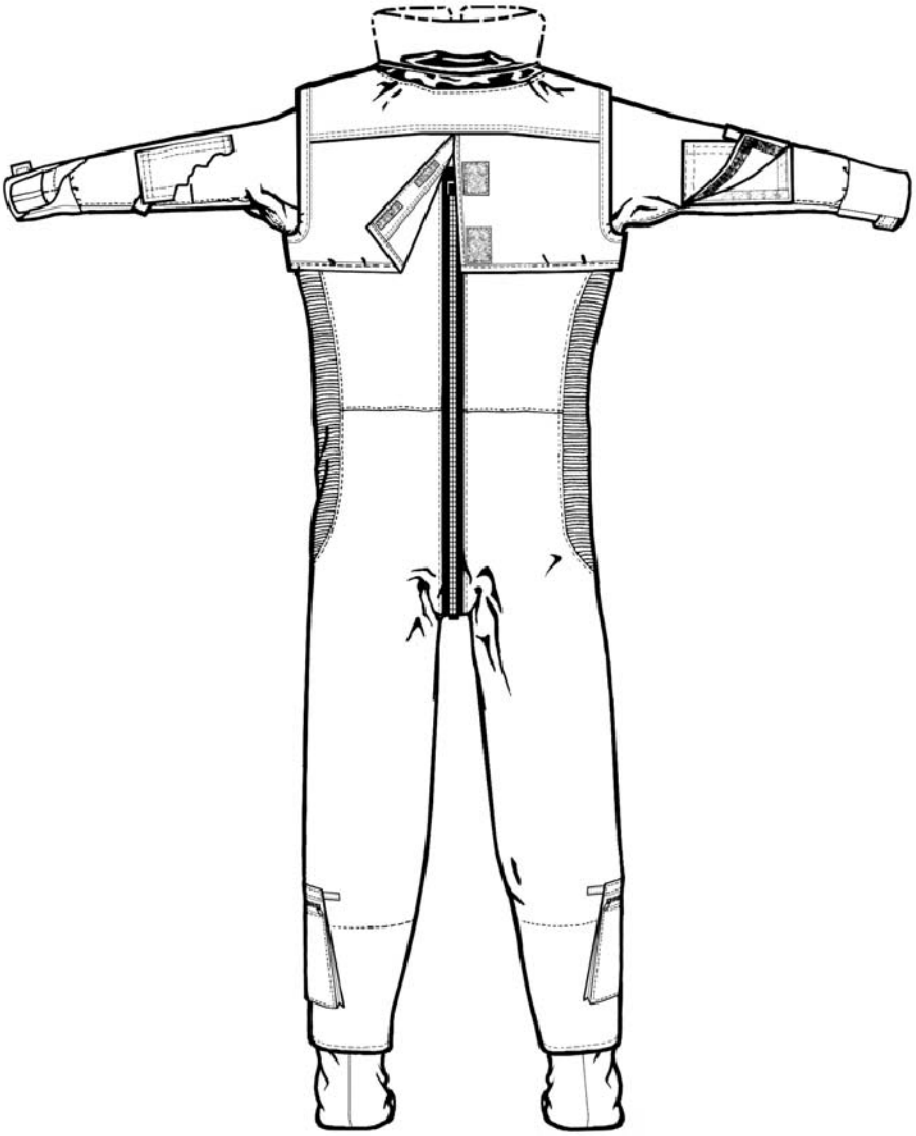

Figure 5-25. CWU-87/P Women's Flyers' Ruggedized Flyer's Coverall, Back View

DONNING PROCEDURE FOR CWU-86/P

WARNING

REMOVE ALL SHARP RINGS AND WATCHES BEFORE DONNING!

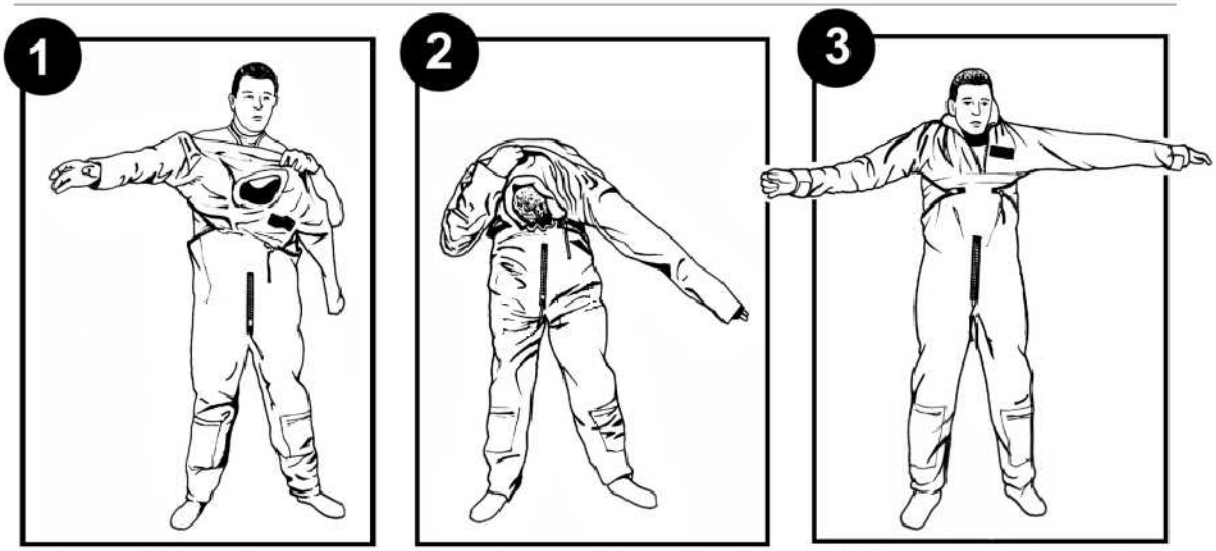

Hold coverall in front of you and step in with both legs. Then place one arm all the way through.

Place other arm all the way through sleeve. Then bow head and place through neck seal.

Straighten out and make sure the neck seal fits around neck without any edges folded under.

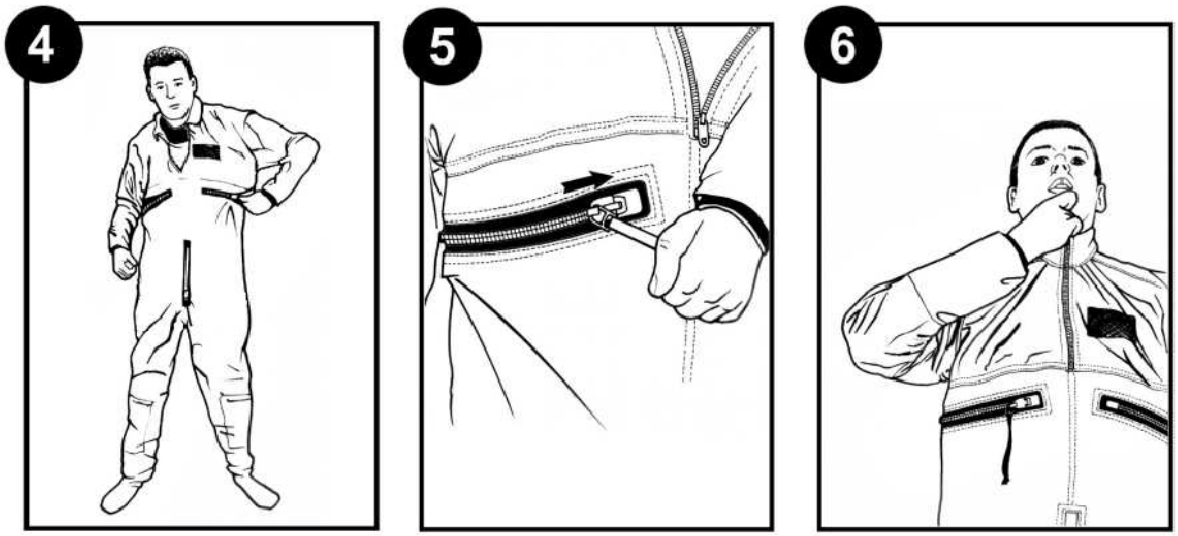

Grab zipper firmly and pull all the way around.

Pull zipper ALL the way to the stop.

Flip up collar, and pull the zipper all the way to the end stop.

Figure 5-26. Donning Procedures for the CWU-86/P Ruggedized Coverall

DONNING PROCEDURE FOR CWU-87/P RUGGEDIZED COVERALL

WARNING! REMOVE ALL JEWELRY, WATCHES AND EARRINGS BEFORE DONNING!

With coverall fully open, step into coverall so that the longest part of the slide fastener will be on your back. Then pull coverall up to your knees.

While squatting, bend forward and lift coverall over your head.

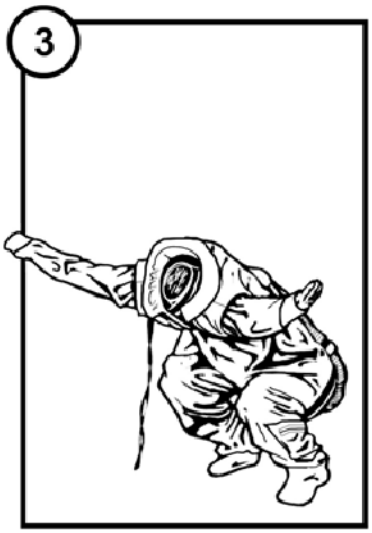

Put arms and head into coverall.

Once arms are in the sleeves and head is in the neck seal, begin to stand.

Allow head and hands to go through rubber seals. Once standing, adjust pant legs so that they are not twisted and slide fastener is running straight up the back.

Close slide fastener by leaning forward (to provide tension), and pulling tether down back, through legs, and up the front. Make sure slide fastener is fully closed. Zipping up collar is optional.

Figure 5-27. Donning Procedures for the CWU-87/P Ruggedized Coverall

DOFFING PROCEDURE FOR CWU-87/P RUGGEDIZED COVERALL

WARNING! REMOVE ALL JEWELRY, WATCHES AND EARRINGS BEFORE DOFFING!

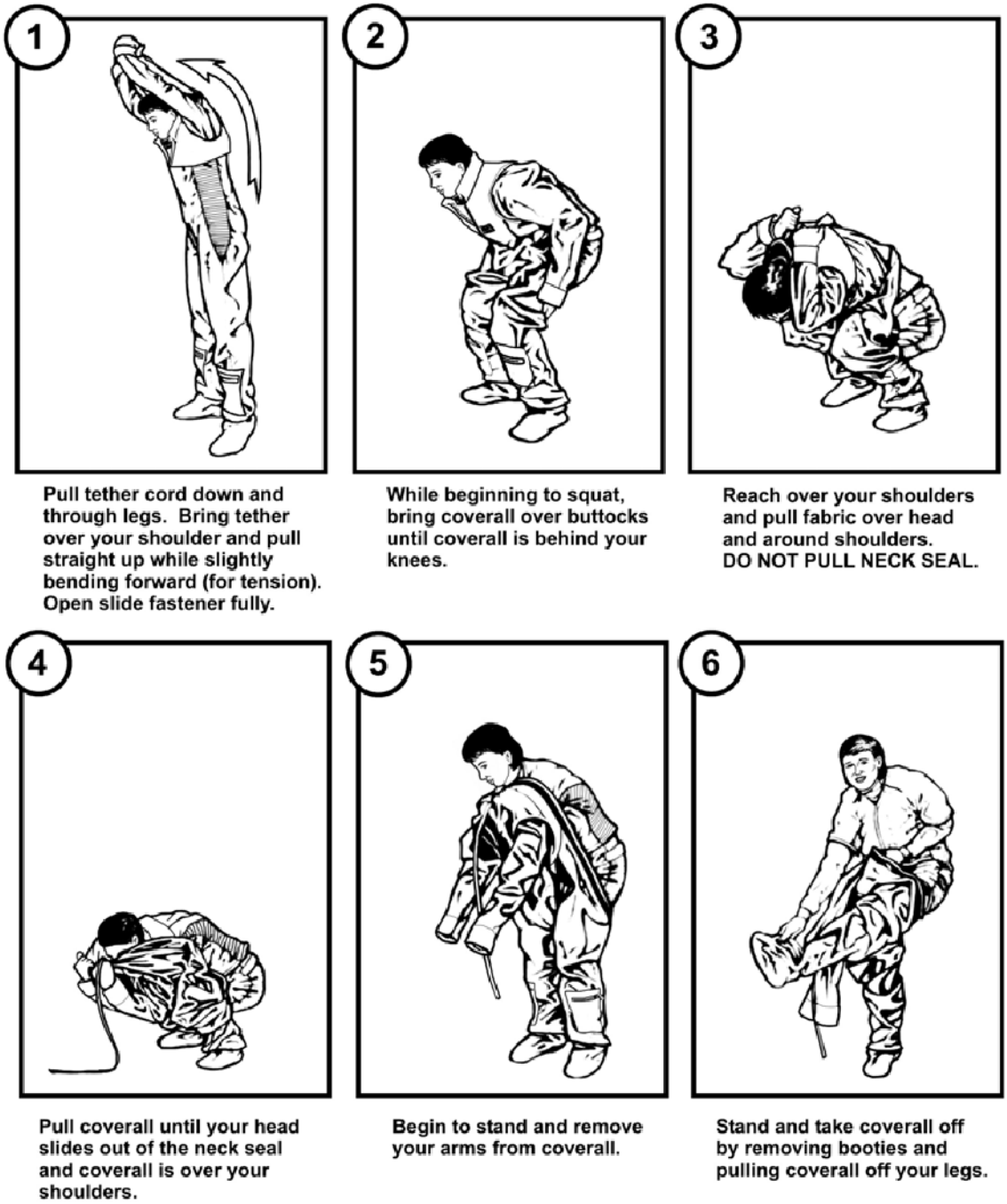

Figure 5-28. Doffing Procedures for the CWU-87/P Ruggedized Coverall

Table 5-11. Components for Flyers' Ruggedized Anti-Exposure Coveralls

Component Nomenclature	A/P22P-6E(V)2 MEN	A/P22P-6(V)3 WOMEN
CWU-43/P Drawers or MCP Silk-weight or MCP Midweight.	Required Is the underwear optional now with the availability of MCP?	Required
CWU-44/P Undershirt or MCP Silkweight or MCP Midweight.	Required	Required
CWU-23/P Liner, Anti-Exposure	Optional	Optional
CWU-72/P Liner, Anti-Exposure	Optional	Not Applicable
CWU-81/P Liner, Anti-Exposure	Not Applicable	Optional
CWU-82/P Liner, Anti-Exposure	Not Applicable	Optional
CWU-86/P Flyers' Anti-Exposure Coveralls	Required	Not Applicable
CWU-87/P Flyers' Anti-Exposure Coveralls	Not Applicable	Required
Socks, Anti-Exposure[1]	Optional	Optional
Gloves, Anti-Exposure1	Required	Required
Hood, Anti-Exposure HGU-32/P	Optional	Optional
Mittens Set, Flyer's Anti-Exposure (HAU-12/P)	Optional	Optional

NOTES:
1. CWU-75/P
2. May be either Passenger Anti-Exposure Glove (see numerical index) or Rescue Swimmer Glove, HAU-12/P or authorized COTS substitute.

All accessories, e.g. underwear, gloves, socks, are located in Chapter 3.

Table 5-12. Recommended Underclothing Based on Water Temperature

	Underwear			Liner		
	Rotary Wing	Fixed Wing Non-Ejection Seat	Fixed Wing Ejection Seat	Rotary Wing	Fixed Wing Non-Ejection Seat	Fixed Wing Ejection Seat
Water Temperature Above 60 degrees F	CWU-43 and CWU-44 or MCP Silkweight or MCP Midweight	CWU-43 and CWU-44 or MCP Silkweight or MCP Midweight	CWU-43 and CWU-44 or MCP Silkweight or MCP Midweight	Optional	Optional	Optional
Water Temperature 50 to 60 degrees F	CWU-43 and CWU-44 or MCP Silkweight and/or MCP Midweight	CWU-43 and CWU-44 or MCP Silkweight and/or MCP Midweight	CWU-43 and CWU-44 or MCP Silkweight and/or MCP Midweight	CWU-23/P or CWU-72/P or CWU-81/P and CWU-82/P or MCP Heavyweight	CWU-23/P or CWU-72/P or CWU-81/P and CWU-82/P	CWU-23/P or CWU-72/P or CWU-81/P and CWU-82/P
Water Temperature Below 50 degrees F	CWU-43 and CWU-44 (two sets) or MCP Silkweight and MCP Midweight	CWU-43 and CWU-44 (two sets) or MCP Silkweight and MCP Midweight	CWU-43 and CWU-44 (two sets) or MCP Silkweight and MCP Midweight	CWU-23/P or CWU-72/P or CWU-81/P and CWU-82/P or MCP Heavyweight	CWU-23/P or CWU-72/P or CWU-81/P and CWU-82/P	CWU-23/P or CWU-72/P or CWU-81/P and CWU-82/P
Note: For proper anti-exposure protection, a CWU-86/P or CWU-87/P Flyers' Anti-Exposure Coveralls must be worn over the recommended underclothing.						

(ORGANIZATIONAL USE) _____ DATE _____
ACTIVITY/SQN. _____ COVERALL SERIAL NO. _____ C.D.I. _____
REMARKS:
_____
_____
_____
(INTERMEDIATE USE)
INSPECTION/TEST REMARKS:
_____
_____
_____
REPAIR REMARKS:
_____
_____
_____
REPAIRED BY _____ INSPECTOR _____ DATE_____

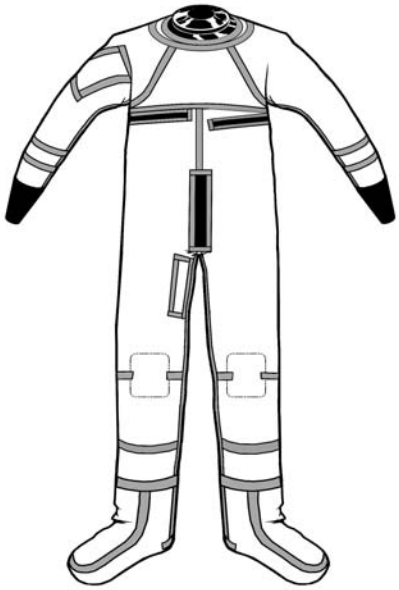

Front View (inside out)

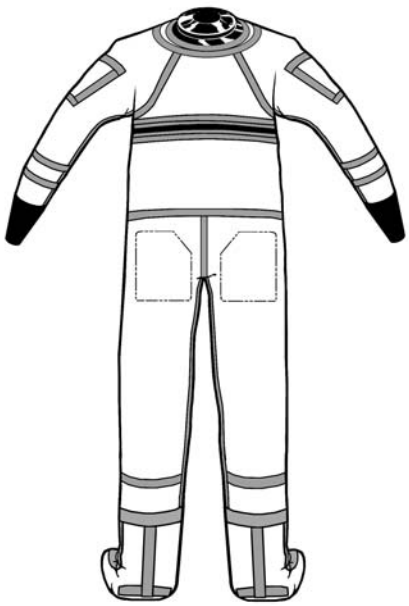

Rear View (inside out)

Figure 5-29. CWU-86/P Flyers' Anti-Exposure Coveralls, Damage Chart

(ORGANIZATIONAL USE) _____ DATE _____
ACTIVITY/SQN. _____ COVERALL SERIAL NO. _____ C.D.I. _____
REMARKS:
_____
_____
_____
(INTERMEDIATE USE)
INSPECTION/TEST REMARKS:
_____
_____
_____
REPAIR REMARKS:
_____
_____
_____
REPAIRED BY _____ INSPECTOR _____ DATE_____

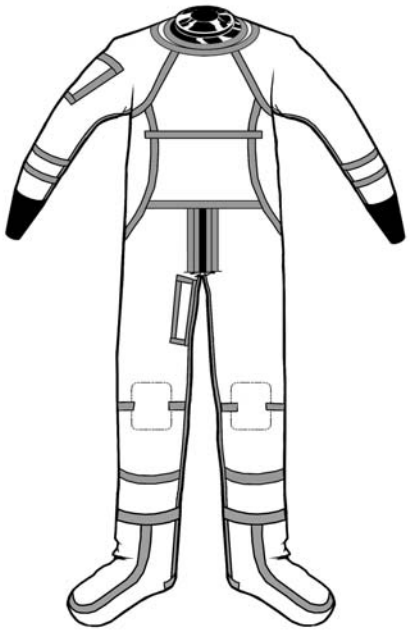

Front View (inside out)

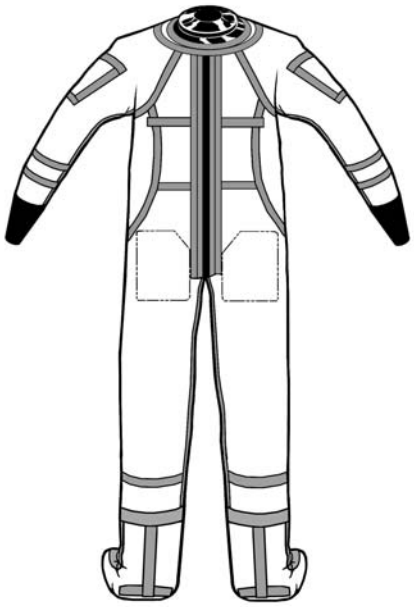

Rear View (inside out)

Figure 5-30. CWU-87/P Flyers' Anti-Exposure Coveralls, Damage Chart

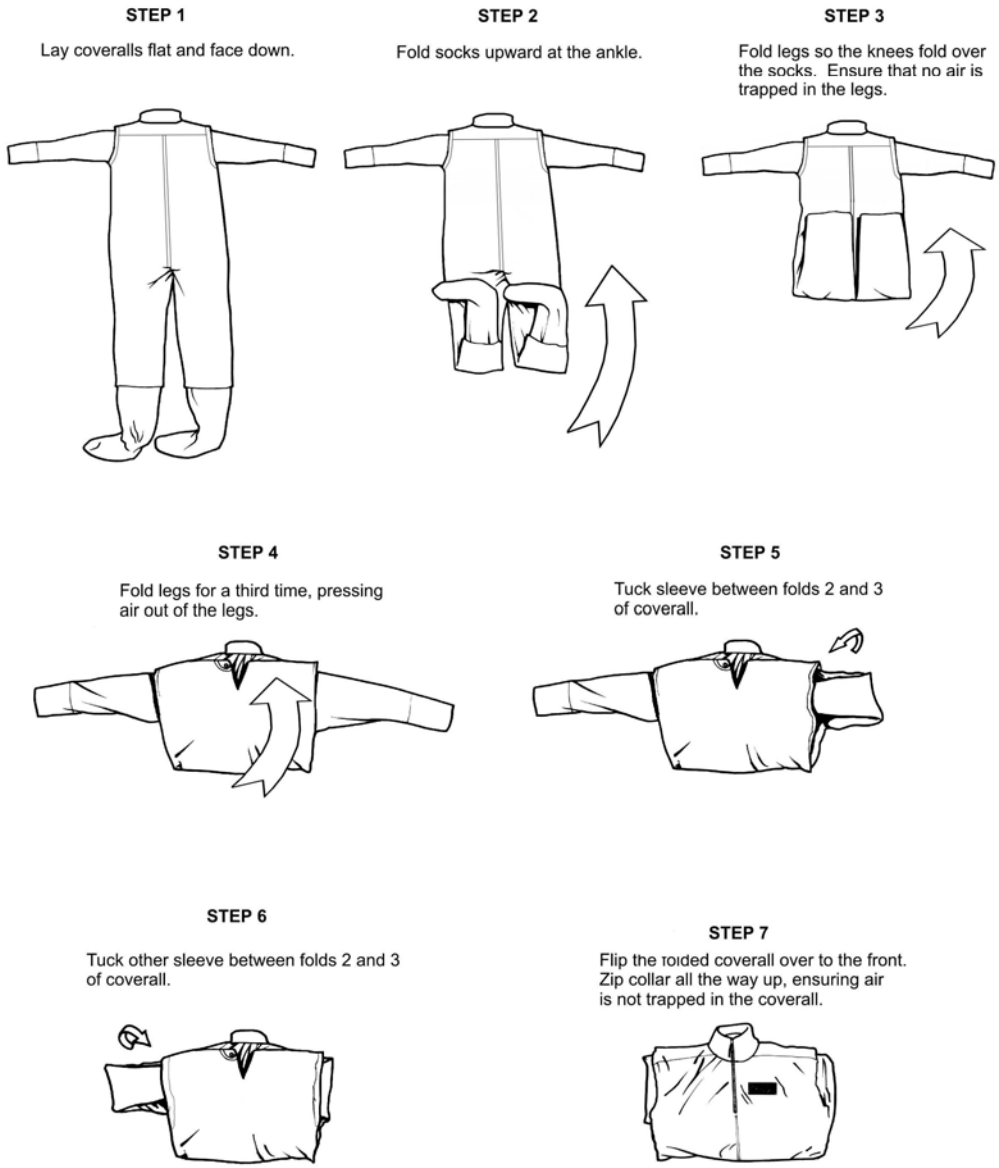

Figure 5-31. CWU-86/P and 87/P Flyers' Ruggedized Coverall, Folding Procedures

Table 5-13. Repairs and Fabrications

Component	Discrepancy	Repair Authorized	Reference
Anti-Exposure Coveralls, CWU-86/P and CWU-87/P	Pinholes, small porous areas, rips or tears less than 1/2” in length	Yes	5-60
	Larger tears or rips up to 7” in length	Yes	5-63
	Small holes up to 3” diameter	Yes	5-66
	Larger porous areas up to 7” x 7”	Yes	5-67
	Tear, continuing through a seam	*No*	5-70
	Reattachment of slide fasteners	Yes	5-72
	Replacement of slide fasteners	Yes	5-73
	Replacement of neck and wrist seals	Yes	5-74
	Replacement of anti-exposure socks	Yes	5-78
	Replacement of loose seam tape	Yes	5-79
	Increasing leg length	Yes	5-82
	Increasing sleeve length	Yes	5-83
Neoprene Wrist Seals	Loose seam tape seal-to-fabric	Yes	5-85
	Small nicks, crack, splits less than 1/2” in length		5-86
	Pinholes, rips or tears less than 1/2” in length		5-88
Latex Neck Seal	Loose seam tape seal-to-fabric	Yes	
	Nicks	*No*	
	Pinholes	*No*	
Anti-Exposure Socks	Pinholes, small porous areas, rips or tears less than 1/2” in length	Yes	5-91
	Small porous areas (less than 1” diameter)	Yes	5-91
	Tear, greater than 1/2” in length	*No*	5-90
	Tear, continuing through a seam	*No*	5-70
	Repair of loose seam tape	Yes	5-92
Anti-Exposure Liners CWU-23/P, CWU-72/P, CWU-81/P, or CWU-82/P	Replacement of slide fastener	Yes	5-94
	Tears or holes up to 2” in length	Yes	5-94
	Replacement of hook and pile tapes	Yes	5-94
	Loose or broken stitching	Yes	5-94
	Tears or rips greater than 2” in length	Yes	5-94
	Tears continuing through a seam	*No*	5-94
	Replacement of wrist insert	Yes	5-95

Table 5-14. Replacement Slide Fasteners

Coveralls Size	Slide Fastener Length (Note 1)	Part Number	NIIN
Entrance Slide Fastener			
CWU-86/P			
1, 2, 3	34	3769AS103-8	TBD
4, 5, 6	38	3769AS103-10	TBD
7, 8, 9	42	3769AS103-12	TBD
10, 11, 12	46	3769AS103-14	TBD
CWU-87/P			
XSmall/Short	34	3769AS103-8	TBD
XSmall/Regular	36	3769AS103-9	TBD
XSmall/Long	38	3769AS103-10	TBD
XSmall/XLong	40	3769AS103-11	TBD
Small/Short	36	3769AS103-9	TBD
Small/Regular	38	3769AS103-10	TBD
Small/Long	40	3769AS103-11	TBD
Small/XLong	42	3769AS103-12	TBD
Medium/Short	38	3769AS103-10	TBD
Medium/Regular	40	3769AS103-11	TBD
Medium/Long	42	3769AS103-12	TBD
Medium/XLong	44	3769AS103-13	TBD
Large/Short	40	3769AS103-11	TBD
Large/Regular	42	3769AS103-12	TBD
Large/Long	44	3769AS103-13	TBD
Large/XLong	46	3769AS103-14	TBD
XLarge/Short	42	3769AS103-12	TBD
XLarge/Regular	44	3769AS103-13	TBD
XLarge/Long	46	3769AS103-14	TBD
XLarge/XLong	48	3769AS103-15	TBD
XXLarge.Short	44	3769AS103-13	TBD
XXLarge/Regular	46	3769AS103-14	TBD
XXLarge/Long	48	3769AS103-15	TBD
XXLarge/XLong	50	3769AS103-16	TBD
Relief Portal Slide Fastener			
CWU-86/P	8	3769AS103-2	TBD
Length is measured from zip stop to 1. Note zip stop (length of teeth).			

Table 5-15. Sizing Guide, CWU-86/P (Men)

Height (inches)	Weight (pounds)	Chest Circumference (inches)	NIIN	Size
63-66	125-149	32-36	TBD	1 - (Small Short)
66-69	125-149	32-36	TBD	2 - (Small Regular)
69-72	125-149	32-36	TBD	3 - (Small Long)
65-67	150-174	37-40	TBD	4 - (Medium Short)
67-70	150-174	37-40	TBD	5 - (Medium Regular)
70-73	150-174	41-44	TBD	6 - (Medium Long)
66-69	175-199	41-44	TBD	7 - (Large Short)
69-72	175-199	41-44	TBD	8 - (Large Regular)
72-75	175-199	45-47	TBD	9 - (Large Long)
67-70	200-224	45-47	TBD	10 - (Extra Large Short)
70-73	200-224	45-47	TBD	11 - (Extra Large Regular)
73-76	200-224	45-47	TBD	12 - (Extra Large Long)

Table 5-16. Sizing Guide, CWU-87/P (Women)

Height (inches)	Hip Size (inches)	NIIN	Size
less than 64.5	less than 32	Custom Fit	1 - (X-Small Short)
64.5-67.5	less than 32	Custom Fit	2 - (X-Small Regular)
67.5--70.5	less than 32	Custom Fit	3 - (X-Small Long)
more than 70.5	less than 32	Custom Fit	4 - (X-Small X- Long)
less than 64.5	32-36	TBD	5 - (Small Short)
64.5-67.5	32-36	TBD	6 - (Small Regular)
67.5-70.5	32-36	TBD	7 - (Small Long)
more than 70.5	32-36	Custom Fit	8 - (Small X-Long)
less than 64.5	36-40	TBD	9 - (Medium Short)
64.5-67.5	36-40	TBD	10 - (Medium Regular)
More than 67.5	36-40	TBD	11 - (Medium Long)
TBD	36-40	Custom Fit	12 - (Medium X-Long)
less than 64.5	40-44	TBD	13 - (Large Short)
64.5-67.5	40-44	TBD	14 - (Large Regular)
67.5-70.5	40-44	TBD	15 - (Large Long)
more than 70.5	40-44	Custom Fit	16 - (Large X-Long)

Table 5-16. Sizing Guide, CWU-87/P (Women) (Continued)

Height (inches)	Hip Size (inches)	NIIN	Size
less than 64.5	44-48	Custom Fit	17 - (X-Large Short
64.5-67.5	44-48	Custom Fit	18 - (X-Large Regular)
67.5-70.5	44-48	Custom Fit	19 - (X-Large Long)
more than 70.5	44-48	Custom Fit	20 - (X-Large X-Long)
less than 64.5	more than 48	Custom Fit	21 - (XX-Large Short)
64.5-67.5	more than 48	Custom Fit	22 - (XX-Large Regular)
67.5-70.5	more than 48	Custom Fit	23 - (XX-Large Long)
more than 70.5	more than 48	Custom Fit	24 - (XX-Large X-Long)

Table 5-17. Neck Seal Sizing

	Pre-Molded Cut Line[1]	Neck Size
MEN'S	1	11.5
	2	12.25
	3	12.75
	4	13.25
	5	13.75
	6	14.25
	7	14.75
	8	15.25
	9	15.75
	10	16.5
	11	17
WOMEN'S	1	9.25
	2	10
	3	10.5
	4	11
	5	11.5
	6	12
	7	12.5
	8	13
	9	13.5
	10	14
	11	15

Note 1: Pre-molded cut lines start at the narrow top opening (1) and work their way down the neck towards the shoulder (11)

Table 5-18. Anti-Exposure Socks

Anti-Exposure Sock Size	Corresponding Boot Size Range
Size 1R	Women's 3-4, Right Foot
Size 1L	Women's 3-4, Left Foot
Size 2R	Women's 5-6, Right Foot
Size 2L	Women's 5-6, Left Foot
Size 3R	Women's 7-8, Right Foot
Size 3L	Women's 7-8, Left Foot
Size 4R	Women's 9-10, Right Foot
Size 4L	Women's 9-10, Left Foot
Size 5R	Men's 6-7, Right Foot
Size 5L	Men's 6-7, Left Foot
Size 6R	Men's 8-9, Right Foot
Size 6L	Men's 8-9, Left Foot
Size 7R	Men's 10-12, Right Foot
Size 7L	Men's 10-12, Left Foot
Size 8R	Men's 13-15, Right Foot
Size 8L	Men's 13-15, Left Foot

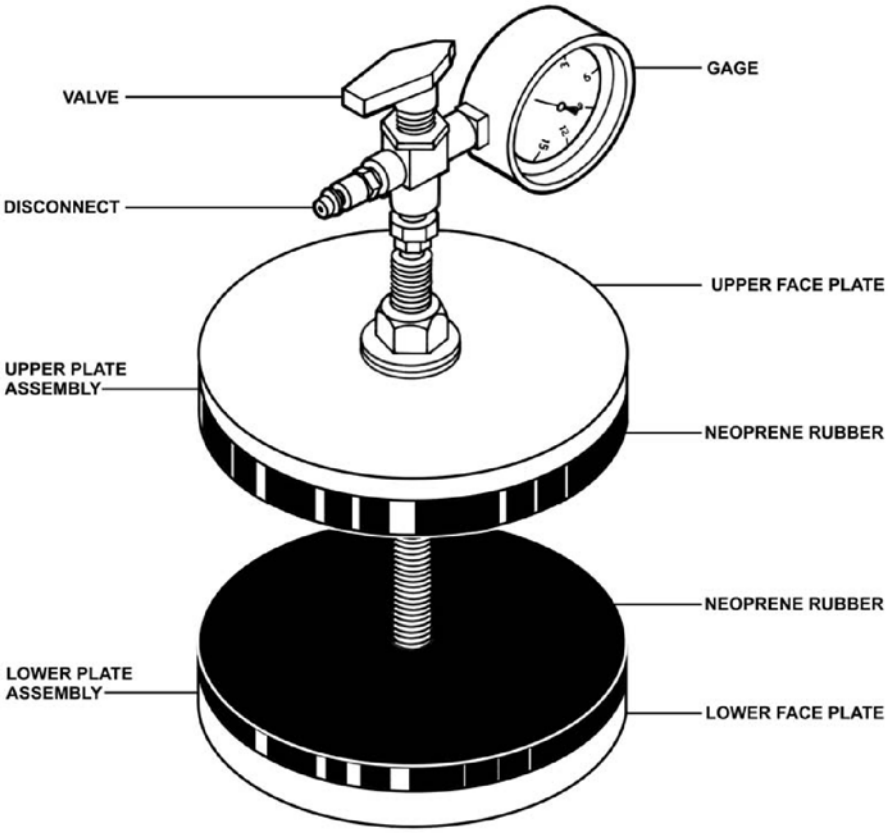

Figure 5-32. Air Leak Test Device, Assembled

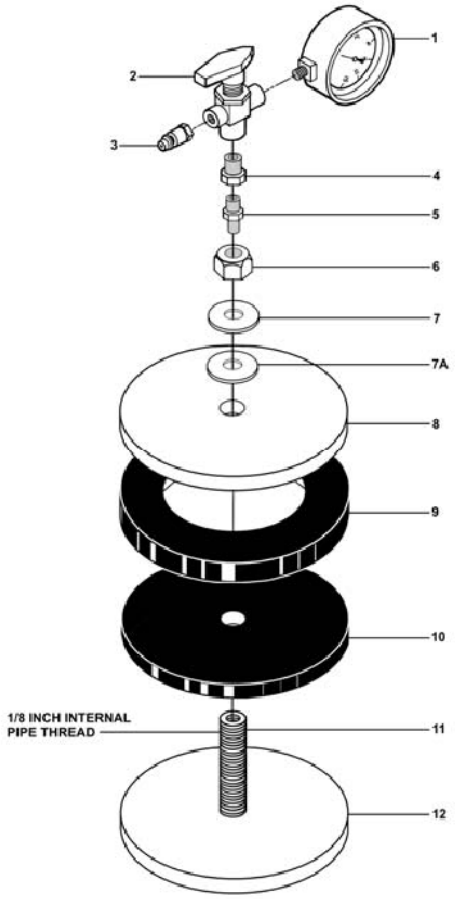

Figure 5-33. Air Leak Test Fixture, Unassembled and Parts List

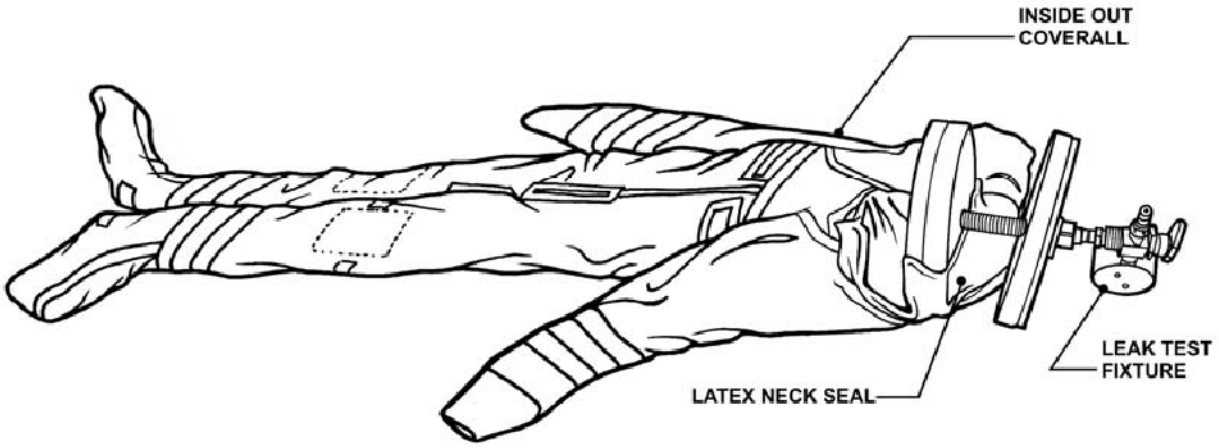

Figure 5-34. Face Plate Assembly (Bottom Plate Inside Suit)

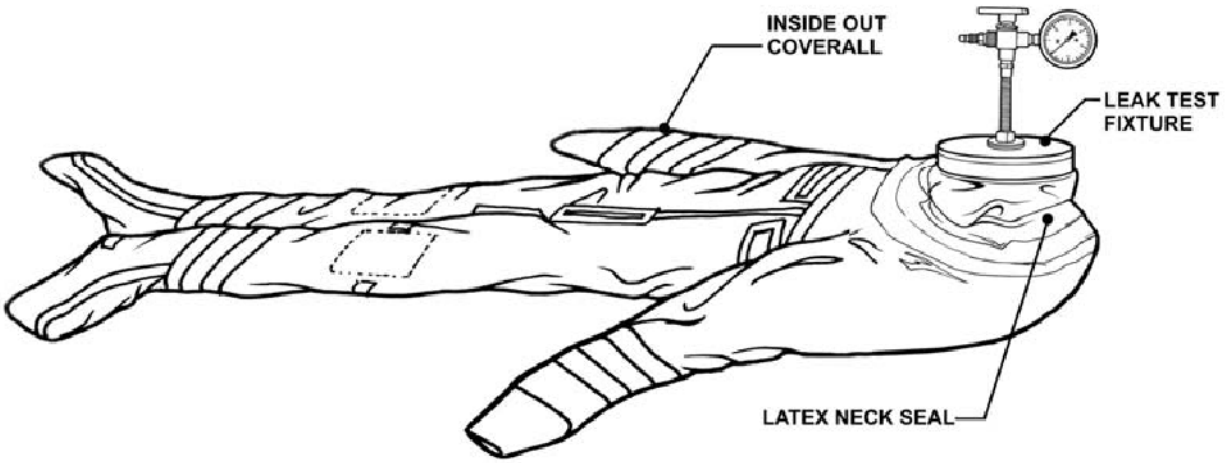

Figure 5-35. Face Plate Assembly (Top and Bottom Plates Fastened Together)

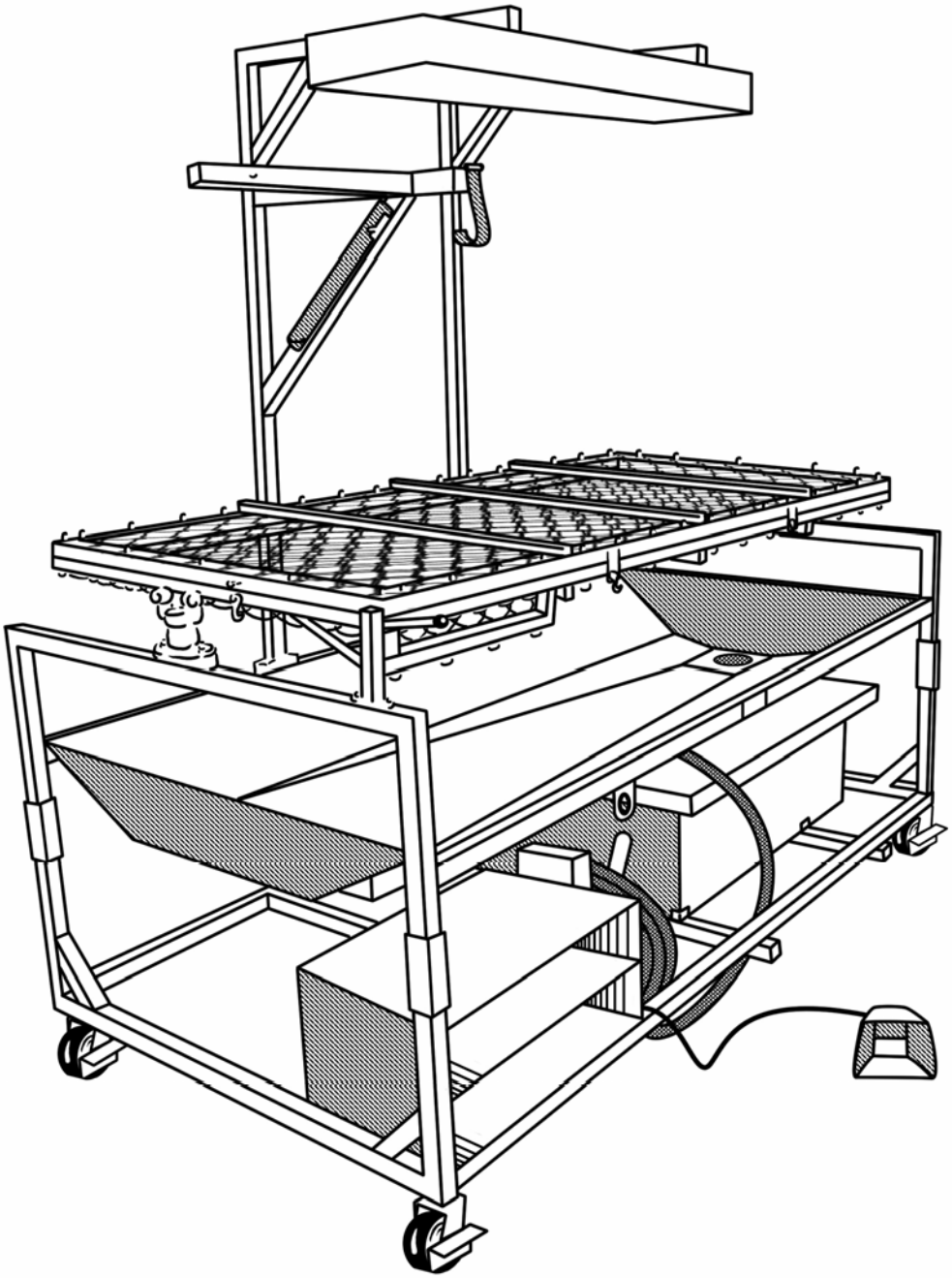

Figure 5-36. Water Test Device

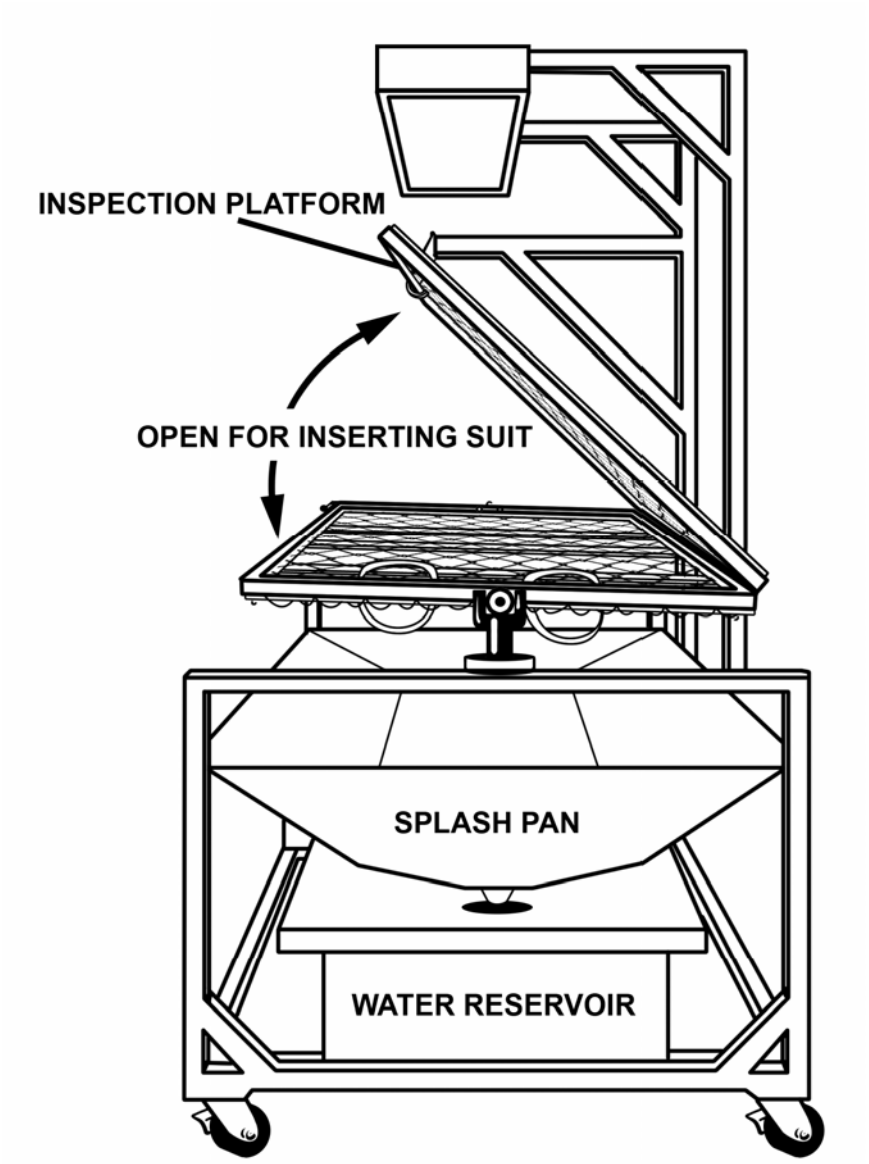

Figure 5-37. Water Test Device (end view)

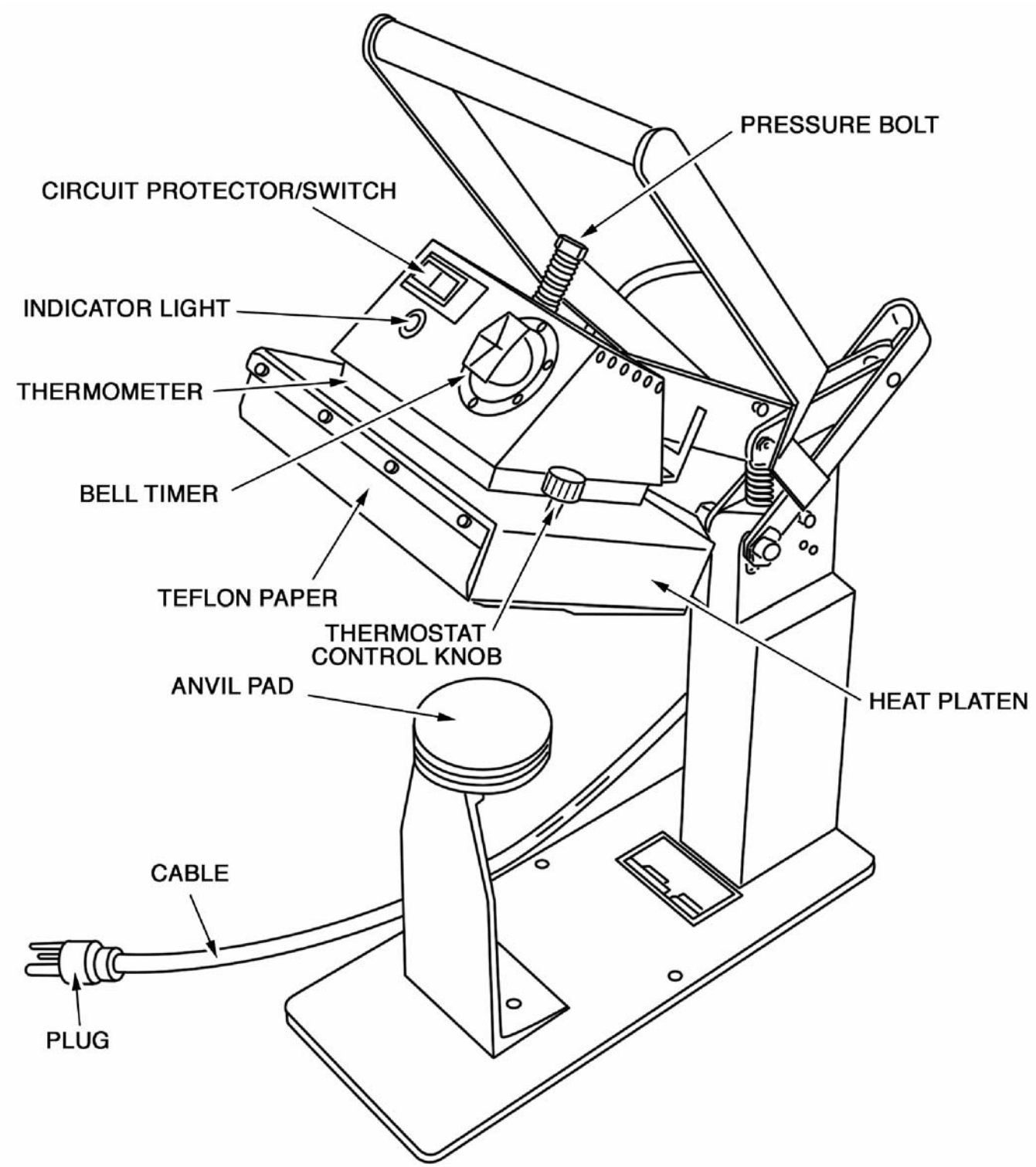

Figure 5-38. Heat Sealer, Seam and Patch

5-99. UNDERCLOTHING. The first layer of underclothing is for cold weather protection (Table 5-12). Undergarments shall always be worn with the CWU-86/P and CWU-87/P Flyers' Anti-Exposure Coveralls. Refer to Chapter 3 for applications, detailed descriptions and sizing information.

5-100. LINERS. When worn, the liner shall be directly under the CWU-86/P and CWU-87/P coveralls and over the underclothing (Table 5-12). The liner provides another layer of thermal protection.

5-101. FLYERS' ANTIEXPOSURE COVERALLS. The CWU-86/P and CWU-87/P Flyers' Anti-Exposure Coveralls are supplied in twelve sizes for men and twenty-four sizes for women, respectively (Table 5-15 and Table 5-16). These coveralls shall not be worn in direct contact with the skin because 1) skin irritation is known to result from wearing the coveralls in direct contact with the skin, and 2) long underwear is always worn between skin and coverall to provide minimum thermal protection. Proper maintenance is essential to the service life and protection of this coverall, as well as proper sizing and fitting. The neck seal is made of latex and the wrist seals are made of neoprene and must be sized to the individual aircrewmember. The entrance and the relief portal slide-fasteners are waterproof to wetting and immersion. Neck and wrist seals come attached from the manufacturer however socks must be procured separately from the coveralls and sized to the individual aircrewmember.

5-102. ANTI-EXPOSURE SOCKS. The anti-exposure socks are supplied in eight sizes (Table 5-18). The antiexposure socks are of sewn and taped construction made of waterproof, breathable, woven fabric. The tops of socks extend above the flight boots to reduce bulk and restriction.

5-103. ANTI-EXPOSURE WRIST SEAL UNITS (NEOPRENE). The wrist seal units are dual manufactured, i.e. they are constructed of a flame resistant fabric panel and a neoprene cone shaped gasket. The fabric panel allows attachment to the coverall by sewing and seam taping. The wrist seal units are trim-to-fit and must be sized to the individual aircrewmember. Both pieces of the wrist seal, the neoprene cone-shaped gasket and the fabric panel are referred to as the wrist seal. The wrist seal itself is covered by aramid cloth (flight suit material) that comes down over the wrist seal so that the visual effect is that of a flight suit. This aramid cloth section of the coverall that covers the wrist seal is referred to as the sleeve cuff.

5-104. ANTI-EXPOSURE NECK SEAL UNITS. The neck seal units are dual manufactured, i.e. they are constructed of a flame resistant fabric panel and a latex bellows shaped gasket. The fabric panel allows attachment to the coverall by sewing and seam taping. The neck seal units are trim-to-fit and must be sized to the individual aircrewmember. Collectively the two pieces of the neck seal, the latex bellows gasket and the fabric panel, are referred to as the neck seal. The neck seal units will be manufactured in two different configurations; Type I for men and Type II for women. The two types of neck seal units are identical except that the Type II neck seal has a smaller neck opening to accommodate smaller neck sizes.

5-105. ANTI-EXPOSURE HEAD WEAR. No hood currently comes with the CWU-86/P or CWU-87/P coveralls. An HGU-32/P inflatable hood may be selected as an optional item with these coveralls. See Section 3-37 and Table 5-11.

5-106. ANTI-EXPOSURE HAND WEAR. Aircrew can choose to use either the one-size-fits-all Neoprene Gloves (NIIN 01-482-1003), or the HAU-12/P Anti-Exposure Mittens (NIIN 8475-01-255-7484) Section 3-33 to complete the Anti-Exposure Apparel Assembly. Neither the gloves nor the mittens come with the CWU-86/P or CWU-87/P coverall; they must be ordered separately from the coverall. At a minimum, the aircrewmember must have either the one-size fits-all neoprene gloves or the HAU-12/P when the Ruggedized anti-exposure coverall is required for flight. However, it is recommended that the aircrewmember have both the neoprene glove and the HAU-12/P to properly insulate the hands and fingers during cold-water immersion. Which ever hand wear is used it shall be installed in the glove pockets provided on the right and left sleeves of the coveralls and both must be modified to add hook fastener tape to the tether line as a means of attaching the hand wear to the coverall.

5-107. APPLICATION. The CWU-86/P and CWU-87/P Flyers' Anti-Exposure Coveralls shall be worn by aircrewmembers for flight operations in accordance with the climatic and operational requirements established by the NATOPS General Flight and Operational Instructions Manual OPNAVINST 3710.7 (Series).

5-108. FUNCTION. The CWU-86/P and CWU-87/P Flyers' Anti-Exposure Coveralls are designed to function like the flight coverall to allow performance of all required flight operations without restricting body movement. The optional anti-exposure gloves, hood, and mittens are not worn during flight but remain stowed in the pockets of the coverall or survival vest for emergency use.

5-109. EMERGENCY. The complete ensemble provides protection from the thermal effects of cold-water immersion in the event of emergency over water aircraft egress. In the event of immersion in water, the seals and fabric of the coveralls will not permit entry of water, keeping the wearer dry and warm. Neoprene gloves help fingers retain warmth during initial operation of emergency equipment. Inflatable mittens help the hands retain warmth for extended periods of time. The inflatable hood, if worn, can help the head retain heat if the cranial or helmet is missing. All components of the assembly (Table 5-11) must be worn to achieve the greatest level of exposure protection.

NOTE

The recommendations in Table 5-12 in the row labeled "Below 50 deg F" have been verified to provide a maximum of 2 hours protection in 45 deg F water temperature without a life raft and/or 32 deg F water temperature with a life raft.

5-110. MODIFICATIONS. The only modifications to the CWU-86/P and CWU-87/P Flyers' Anti-Exposure-Coveralls authorized at this time are increasing or decreasing leg or sleeve length of the coverall, if required. Refer to paragraphs 5-159, 5-160, 5-161 for instructions.

5-111. IDENTIFICATION OF THE CWU-86/P AND CWU-87/P COVERALLS. After the socks and seals have been fitted and installed on the CWU-86/P or CWU-87/P coveralls, the coveralls become personal equipment of the aircrewmember. Use a permanent felt-tipped laundry marker to mark name and/or other desired information on the coverall.

5-112. DONNING.

5-113. To don the anti-exposure Assembly proceed as follows:

NOTE

The anti-exposure gloves, hood and mittens are not worn during flight but remain stowed in the coveralls pockets or survival vest for emergency use.

CAUTION

To ease donning, talc may be applied to the neck and wrist seals of the CWU-86/P and CWU-87/P coveralls, as well as to the neck, wrists and hands of the wearer prior to donning or doffing the coverall. Use care when donning or doffing.

CAUTION

Sharp objects can damage seal and coverall fabric during donning and doffing. Remove watches, rings, earrings and other sharp instruments that can puncture or abrade surfaces.

4. Don underwear/thermal liners, wool socks per recommendations in Table 5-12.

5. Don the coveralls. Use procedures depicted in Figure 5-26 (CWU-86/P) or Figure 5-27 (CWU-87/P).

6. Push excess air out of the coverall manually by squatting at the knees, thighs against chest, and then stretching the neck seal open to vent the excess air.

7. Ensure that anti-exposure hand wear protection is stowed in coverall pockets, in survival vest, or otherwise on the person.

5-114. DOFFING.

5-115. To doff the CWU-86/P coverall, carefully reverse the donning procedures, using procedures depicted in Figure 5-26. To doff the CWU-87/P coverall, use procedures depicted in Figure 5-28.

5-116. MAINTENANCE.

5-117. Repair and replacement functions for the CWU-86/P and CWU-87/P coveralls will be accomplished at the Organizational Maintenance Level (O-Level) and Intermediate Maintenance Level (I-Level) or above.

NOTE

The applicable SM&R code specifies "Repair at I-level". However, authorization is granted to O-level to perform sewing operations on the CWU-86/P and CWU-87/P coveralls, provided heat-sealing and leakage testing are performed at the I-level.

NOTE

Maintenance inspections for all component parts are listed in their respective section of this manual. Although worn as a complete ensemble (e.g. coveralls, hood, mittens, underclothing, liner) the maintenance of each component is covered under its respective individual section of this manual. Each component of the ensemble shall be inspected and documented individually according to the maintenance outline in the appropriate section of this manual.

5-118. Quality Assurance (QA) Representative points are included in inspection, repair, and replacement procedures. When a procedure is underlined, there is a QA requirement. After performing procedure, stop and have the Quality Assurance Representative ensure that the step has been performed correctly.

5-119. MAINTENANCE DOCUMENTS. Documents used to record history and maintenance information consist of those documents described in Chapter 2 of this manual and the CWU-86/P and CWU-87/P coveralls damage chart (see Figure 5-29 and Figure 5-30). The damage chart is intended to aid the organizational level custodians of the coveralls in describing other needed repairs to the I-Level technicians. The damage chart shall be used by the I-Level personnel as an aid during inspections and shall accompany the coverall during the life of the coverall. All maintenance actions and inspections shall be documented in accordance with COMNAVAIRFORINST 4790.2.

5-120. SERVICE LIFE CHECK. The service life is the time period during which the Anti-exposure coverall can be maintained in service without replacement. The service life for the anti-exposure coverall is 12 years, computed from the date of manufacture. When the anti-exposure coveralls lack a legible date of manufacture (DOM) and a service life check cannot be verified, the applicable coverall shall be considered non-RFI and removed from service. If the DOM can be established via records maintained on the coverall, the DOM shall be stenciled in permanent marker on the coverall and shall be considered the DOM for the purpose of service life check. Unless otherwise noted the anti-exposure coverall service life shall start on the first date of the month of the date of manufacture and expire on the last day of that month.

NOTE

If the contract number is legible on a coverall without a legible DOM, the contract number can be used to establish a DOM. For example, a coverall with a contract number of SPO100-98-D-4018 was built sometime after the year 1998 as the contract was awarded in 1998. Thus the DOM for this particular coverall with no legible DOM but a legible contract number SPO100-98-D-4018 could safely be established as JAN 1999.

1. Check markings for completeness, legibility and agreement with assembly records. If manufacturers tag becomes worn, loose or torn, stencil DOM on the inside of the coverall, near the entrance slide fastener, where the manufacturers label would/should normally be located.

2. Check the date of manufacture to ensure that the anti-exposure coverall is not beyond its established 12-year service life. The date of manufacture tag is located on the inside of the suit near the entrance slide fastener. The anti-exposure coverall shall be replaced if service life expires prior to the next inspection cycle, unless the next inspection cycle is shortened to comply with the service life expiration date. When the coverall reaches the service life limit, it shall be returned to supply for disposition.

5-121. CONDEMNING CWU-86/P AND CWU-87/P COVERALLS. See paragraph 5-122 Definitions, 5-124 Damage Dimensions and 5-126 Individual Component Repair Limits and Table 5-13 Repairs and Fabrications for complete list of definitions and repair limitations.

NOTE

If a coverall needs repairs within the repairable dimensions and limits in Table 5-13, and paragraphs 5-122 through 5-126 but because of a combination of coverall age, previous repairs, new damage, and excessive time to repair, the repairing maintenance activity may determine repairing to be economically infeasible.

5-122. DEFINITIONS.

5-123. The following definitions shall be used throughout this section to identify the various functions being performed.

1. Beyond Economical Repair (BER): That point at which a coverall would cost more to repair it than it would cost to replace it with a new coverall. This usually occurs when the coverall is reaching the end of its serviceable life but can also happen to newer coveralls that have been extensively damaged. Determination of BER should take in to account the man-hours and materials that will be expended to repair the coverall. Although wage tables are not available for this calculation it is within the scope of the I-Level technicians to use their judgment, experience and intuition when deciding how much repair is too much.

2. Patching: repairing a tear, rip, or hole by sewing a new piece of fabric or tape along the perimeters of the damage, then heat seal taping those sewn edges.

3. Porous Area: fabric that is visibly intact yet still leaks. During water test the criteria shall be: If one (1) drop of water falls from the underside of the coveralls in 10 seconds or less, the coverall shall be repaired. Coverall shall be repaired if during the air test a soap bubble forms twice in the same spot in 10 seconds or less.

4. Reinforcing: repairing a small tear, small rip, small hole or small porous area by heat seal tape alone.

5. Coverall Panel: an individual section of the coverall, e.g., each sleeve, leg front, leg back, body (above crotch line and below neckline) front, or body back.

6. Original Construction Seam Tape: the original seam tape that was applied at the manufacturing plant in the construction of the coverall.

5-124. DAMAGE DIMENSIONS.

5-125. The following are various dimensions to be used throughout this section when determining damage that can and cannot be repaired.

1. **Hole:** Round damage or puncture; an entire circular or elliptical shape missing from the fabric.

c. Small: Pinhole; less than 1/16-inch diameter.

d. Large: Less than 3-inch diameter.

2. **Nick/Gouge/Pit:** Damage in neoprene layer of a wrist seal:

a. Must be less than 1/2 inch in length.

3. **Split/Crack:** Linear damage at an edge through all layers of a wrist or neck seal:

a. Must be less than 1/2 inch in length.

4. **Porous Area:** Fabric that is visibly intact yet still leaks:

a. Small: Less than 1-inch diameter circle.

b. Large: Less than 7 inches by 7 inches. Patches over large porous areas cannot be within one inch of each other.

5. **Rip:** Linear damage; that is, a long continuous cut with no other adjoining cuts:

a. Small: Up to 1-inch long.

b. Large: Up to 10 inches in length.

6. **Tear:** “L”- or “T” shaped damage; that is, a long continuous cut with a short connected perpendicular cut at one or both ends:

a. Small: Up to a 1-inch long with 1/2- inch long cross-wise cut(s).

b. Large: Less than 7 inch in length with 1/2-inch long cross-wise cut(s).

5-126. INDIVIDUAL COMPONENT REPAIR LIMITS.

5-127. The following are repair limits for the various components of the anti-exposure assembly.

1. **Main coverall panels:**

a. May not have more than one large patched; tear, rip, hole or porous area.

b. May not have more than 25% of any panel area repaired by reinforcement and/or patching - this 25% being a cumulative total of previous and new repairs. This 25% calculation excludes original seam taping and reinforcement.

c. Any damage that intersects a seam is not repairable.

2. **Socks:**

a. May be replaced individually or in pairs.

b. Pinholes, small porous areas, small tear, small rip up to 25% area of sock.

3. **Seam Tape:** Original Construction.

NOTE

Replacement of the original construction seam tape (and subsequent repaired/replaced seam tape) shall be at the discretion of the I-level facility doing the repairs. The 15 continuous inches stated below shall be considered flexible to a certain degree. The integrity of the coverall is the most important factor in deciding how much seam tape to replace. I-level technicians must use their experience and intuition when deciding how much seam tape is safe to replace. If the technician feels that 15 continuous inches in a certain section of the coverall is too much to replace for safety reasons then don't replace the tape and condemn the coveralls. If on the other hand the technician needs to repair over 15 inches and feels that it is safe to do so then replace the tape and return the coverall RFI after leak testing

a. Original Construction Seam Tape: Repairs beyond 15 inches are not normally recommended. However, final determination of repair will be at the discretion of the workcenter.

b. Repairs on seam tape attaching components to the coverall (e.g. anti-exposure socks) are permissible only if the existing item (attached components) remains intact. If component part is damaged remove seam tape and replace component.

4. **Wrist Seal:**

a. Neoprene: Nick/Gouge or Split/Crack less than 1/2 inch long.

b. Neoprene: Only one repair within any 1 sq. inch of seal.

c. Fabric Panel: Up to 25% of the fabric panel may be repaired/reinforced.

5. **Neck Seal:**

a. Fabric Panel: Up to 25% of the fabric panel may be repaired/reinforced.

6. **Slide Fastener:**

a. Repair is limited to reattachment and replacement of the slide fastener unit to the coverall. No repair of slide fastener itself is authorized.

7. **Calf Pockets:**

a. Slide fastener is replaced with Hook and pile tape.

b. O-level repair.

c. Unlimited repair of fabric.

8. **Pencil Pocket:**

a. O-level.

b. Replacement of Hook and pile tape on flap and pocket; flap; replace slide fastener with Hook and pile tape.

9. **Cuff, Wrist:**

a. Patch, replace Hook and pile tape, replace strap.

10. **Knife Pocket:**

a. Replace pile fastener tape O level.

b. Patch/reinforce, I level.

5-128. STORAGE.

5-129. To store the CWU-86/P or CWU-87/P coveralls and CWU/23/P, CWU-72/P, CWU-81/P or CWU-82/P liner the following guidelines and procedures shall be followed:

CAUTION

The CWU-86/P and CWU-87/P coveralls should be stored in a cool, dark place as prolonged exposure to the sun's high heat, ultra-violet rays or other sources of ozone will degrade the adhesives and all types of rubber. Keep coveralls away from gasoline, oil and other petroleum products as they dissolve the adhesives.

NOTE

The gloves and hood shall remain in the pockets of the coveralls and placed with the CWU-86/P and CWU-87/P coveralls during periods of storage. The underwear shall be retained by the individual aircrewmember and not put into seasonal storage.

NOTE

For short-term storage, do not insert hanger through neck seal opening because ends could puncture and possibly damage the neck seal. Insert hanger through the entry zipper, and push hanger head from below through the neck seal opening.

5-130. SHORT TERM STORAGE. Between flights, coverall shall be hung on a plastic or wooden hanger or folded in accordance with Figure 5-31, and stored in a clean protected area.

5-131. SEASONAL STORAGE. Storage during the warmer months when anti-exposure protection is not required for flight. Coveralls in Seasonal Storage shall be maintained on their normal 180/360 day inspection cycles and do not require a Place-In-Service inspection upon removal from seasonal storage. Refer to folding instructions for seasonal storage.

5-132. LONG TERM STORAGE. Coveralls being stored rather than being maintained on a 180/360-day inspection cycle (for whatever reason), shall be considered in Long Term Storage. A coverall that has gone beyond its 180-day inspection shall be considered out of service and in Long Term Storage and must be documented as such. Coveralls being removed from Long Term Storage shall have a complete Place-In-Service Inspection completed and documented in accordance with paragraph 5-154.

1. Ensure that coveralls are clean and completely dry.

2. Open and lubricate entrance slide fastener; slide fastener shall remain open during storage.

3. Fold coveralls in accordance with Figure 5-31. Place coveralls in individual plastic bags and clearly label with aircrewmember's name and organization.

4. Loosely pack bagged coveralls in a cruise box or other appropriate storage container. Clearly label with aircrewmember's name and organization.

5. Store containers in a cool, dark, dry area.

5-133. PREFLIGHT AND POSTFLIGHT INSPECTIONS. The preflight and postflight inspections shall be performed on the coveralls by the aircrewmember to whom the coveralls are issued prior to and after each flight. To perform the inspection, inspect the following:

NOTE

If any discrepancies are noted, return coveralls to PR's for further inspection.

1. Cleanliness of assembly components.

2. Inspect surface of coverall, wrist seals, neck seals, and socks for damaged fabric, holes and loose or broken stitching.

3. Inspect slide fasteners for damaged chain, loose/missing teeth, loose/missing stops, improper chain alignment, damaged or split end seal blocks, damaged or missing pull tabs (metal and fabric), and frayed slide fastener tape.

4. Turn coveralls inside out, repeat steps 1, 2 and 3, and inspect seam tapes for looseness or fraying.

5. Turn coveralls right side out. Inspect slide fastener for proper operation. Inspect overall condition of coverall.

NOTE

Preflight and postflight inspections are performed in exactly the same manner. After aircrew completes postflight inspection, coveralls shall be hung on a wooden or plastic hanger, inside out, allowing coveralls to air-dry in a cool, dry, well-ventilated area away from sunlight. Do not insert hanger through the neck seal opening because the ends could puncture the neck seal. Insert hanger through the entry slide fastener and push hanger head from below through the neck seal opening.

5-134. ORGANIZATIONAL LEVEL (O-LEVEL) MAINTENANCE.

5-135. The following list outlines the procedures covered in the following paragraphs that O-level maintenance activities are authorized/responsible for with regard to the maintenance of the CWU-86/P and CWU-87/P Ruggedized Coveralls. Some of the functions are joint maintenance operations between O-Level and I-level (e.g. replacement of wrist seal); read individual paragraphs carefully:

5-136. Sizing of coveralls.
5-137. Wrist seal unit information.
5-138. Inspecting the wrist seal.
5-139. Fitting the wrist seal unit.
5-140. Repair of the wrist seal unit.
5-141. Replacement of the wrist seal.
5-142. Neck seal unit information.
5-143. Inspecting the neck seal unit.
5-144. Fitting the neck seal unit.
5-145. Repairs of the neck seal.
5-146. Replacement of the neck seal.
5-147. Sizing the anti-exposure sock.
5-148. Fitting the anti-exposure sock.
5-149. Initial installation of the anti-exposure sock.
5-150. Repair of the anti-exposure sock.
5-151. Replacement of the anti-exposure sock.
5-152. Modification of Glove/Mitten tether line.
5-153. Maintenance Inspections.
5-154. Place-In-Service.
5-155. 180-Day.
5-156. 360-Day.
5-157. Repairs and Fabrication.
5-158. Seam Tape.
5-159. Increasing leg length.
5-160. Increasing sleeve length
5-161. Shortening the sleeve length
5-162. Overvest repair
5-163. Cleaning and Treatment

5-136. SIZING OF RUGGEDIZED COVERALLS. Measure the individual for whom the coveralls are to be fitted. Take measurements using the procedures in Chapter 10 of this manual "Custom Fitting." Take measurements with the aircrewmember wearing the correct size and configuration of underwear with liner.

NOTE

Quality Assurance (QA) points are included in inspection, repair, and replacement procedures. When a procedure is underlined, there is a QA requirement. After performing procedure, stop and have Quality a Assurance Representative ensure that step has been performed correctly.

5-137. O-LEVEL WRIST SEAL UNIT INFORMATION. The aramid fabric panel of the wrist seal unit allows attachment to the coverall sleeve by sewing and heat seam taping aramid cloth to aramid cloth thereby eliminating the need to use adhesives in the replacement of wrist seals. The wrist seals units are dual manufactured, i.e. they are constructed of a flame resistant aramid fabric panel and a neoprene cone-shaped gasket. Together the neoprene cone-shaped gasket and the aramid fabric panel are referred to as the wrist seal unit (Figure 5-39). The wrist seal units are manufactured so that each unit can be attached to either the right or left sleeve; there are no left and right sleeve units, just one unit that fits either left or right sleeve.

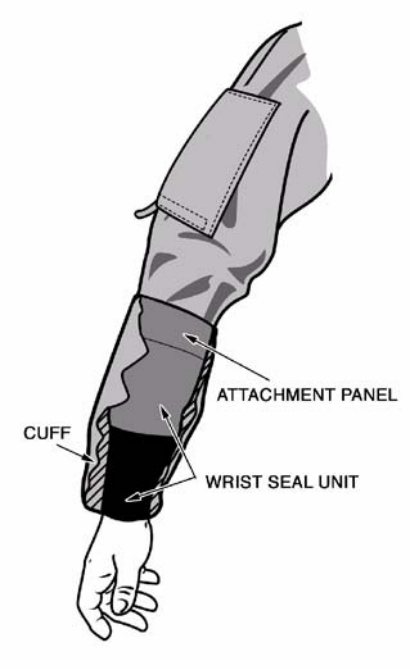

Figure 5-39. Wrist Seal Unit/Sleeve Construction

5-138. O-LEVEL PROCEDURES FOR INSPECTING THE WRIST SEAL UNIT. Removal and replacement of neck seals is an I-Level function. O-Level shall perform preinstallation inspection of wrist seal unit as outlined below and then forward wrist seal and coverall to I-Level for removal and replacement. Wrist seal units for the CWU-86/P and CWU-87/P coveralls are assigned a shelf life of three years. However, they may still be serviceable beyond the assigned expiration date. All wrist seals may be installed regardless of expiration date only after passing the following inspection to determine their usability:

NOTE

Wrist seals for the CWU-86/P Series and the CWU-87/P Series coveralls come individually packaged, not as a pair.

1. Visually inspect each wrist seal for cracking, especially at the top edge of the neoprene and where it is attached to the fabric panel.

2. Lay neoprene gasket on its side and press out flat. Hold neoprene gasket at top and bottom edges and gently stretch vertically. Inspect for cracks and deterioration of the neoprene gasket and attachment point of the neoprene and the fabric panel. Repeat this procedure until the entire circumference of the wrist seal has been inspected, inside and out. If cracks or deterioration are identified, discard wrist seal.

3. Lay neoprene gasket wrist seal on its side and press out flat. Hold neoprene gasket at its sides (folded edge) and gently stretch horizontally. Inspect for cracks and deterioration, especially where heat seal tape reinforces the butted seam on the inside of the neoprene. Repeat this procedure until the entire surface of the neoprene gasket has been inspected, inside and out. If cracks or deterioration are identified, discard wrist seal.

4. Examine wrist seal unit seam tape for integrity. If tape has delaminated, deteriorated or has lost its integrity discard wrist seal unit.

5. Verify inspection and/or repair and/or fit.

6. Document in accordance with COMNAVAIRFORINST 4790.2.

5-139. FITTING OF THE WRIST SEAL UNIT TO THE AIRCREWMEMBER. Wrist seal units are one-size-fits-all, trim-to-fit. The neoprene gasket end of the wrist seal opening must be trimmed, 1/4 inch at a time, until an acceptable fit has been achieved. An acceptable fit is when the seal creates a watertight barrier around the wrist through complete range of motion of the hand about the wrist, without restricting blood flow to the hand, i.e., not too tight. If wrist seal fitting is required, proceed as follows:

NOTE

The neoprene wrist seal gasket opening is very narrow when manufactured in order to accommodate very small wrist sizes. It may not be possible for the aircrewmember to don until some initial trimming is done in accordance with step 1.

1. Have aircrewmember don the unit, if possible, and observe the overall fit of the neoprene gasket of the unit on the aircremember's wrist. Have the aircrewmember doff the unit and if the neoprene wrist seal gasket is too tight trim the wrist seal 1/4 inch at a time. The best technique is to cut in one motion and avoid repeated small snips. Trimming increments shall not exceed 1/4 inch at a time.

2. After trimming wrist seal, have aircrewmember don unit and determine seal restriction and water-sealing characteristics. Make any adjustments in accordance with step 1.a until the neoprene wrist seal gasket fits the aircrewmember.

5-140. O-LEVEL REPAIR OF WRIST SEALS UNIT. O-level repair of wrist seal units is limited to closing small nicks/splits/pits in the in the neoprene gasket. Repairs to the fabric panel and the seam tape attaching the latex gasket to the fabric panel are authorized but is an I-Level function. To repair small nicks/splits/pits in the neoprene gasket proceed as follows:

Materials Required

Quantity	Description	Reference Number
As Required	Brush, Acid, swabbing, disposable	7920-00-514-2417
As Required	Neoprene Adhesive	3497AS108-1 or Aquaseal or Seam Grip
As Required	Toluene, Technical MEK	TT-T-548 6810-00-281-2002

WARNING

Do not use toluene near open flame, heat or electrical sparks. Avoid prolonged contact with skin or breathing of fumes. Use in well ventilated area.

NOTE

Repairing seam tape on the neoprene seal and patching of the fabric panel with seam tape is authorized but is an I-Level function and covered under I-Level repairs.

1. Scrub nicked/split area by brushing surface and nicked edges with toluene. Let dry 20 minutes.

2. Apply neoprene adhesive to nicked edges, overlapping glue on shiny side 1/4-inch. Butt edges and apply hand pressure until bond forms. Allow 24 hours to dry.

3. Document in accordance with COMNAVAIRFORINST 4790.2.

5-141. O-LEVEL REPLACEMENT OF THE WRIST SEAL UNIT. Removal and replacement of the wrist seal unit is an I-Level function. O-Level shall inspect the new wrist seal unit and then forward new wrist seal unit and coverall to I-Level for removal and replacement.

5-142. O-LEVEL NECK SEAL UNIT INFORMATION. The aramid fabric panel of the neck seal unit allows attachment to the coverall neck by sewing and heat seam taping aramid cloth to aramid cloth thereby eliminating the need to use adhesives in the replacement of neck seals. The neck seals units are dual manufactured, i.e. they are constructed of a flame resistant aramid fabric panel and a latex bellows-shaped gasket. Together the latex bellows-shaped gasket and the aramid fabric panel are referred to as the neck seal unit (Figure 5-40). The latex neck seals are trim-to-fit and must be trimmed to the individual aircrewmember. Initial fitting and replacement of a damaged neck seal using the neck seal unit shall be accomplished as outlined below.

Figure 5-40. Neck Seal Unit

5-143. O-LEVEL PROCEDURES FOR INSPECTING THE NECK SEAL UNIT. O-Level shall perform pre-installation inspection of neck seal unit as outlined below and then forward neck seal unit and coverall to I-Level for removal and replacement. Neck seal are assigned a shelf life of three years; however, they may still be serviceable beyond the assigned expiration date. All neck seal units (P/N 3769AS110-1 or -2) may be installed regardless of expiration date only after passing the following inspection to determine their usability:

1. Visually inspect each neck seal for cracking, especially at the open edges of the seal (i.e. top and bottom edges).

2. Lay neck seal latex gasket l on its side and press out flat. Hold latex gasket at top and bottom edges and gently stretch vertically. Inspect for cracks and deterioration. Repeat this procedure until the entire circumference of the latex gasket has been inspected. If cracks or deterioration are identified, discard neck seal.

3. Lay neck seal latex gasket on its side and press out flat. Hold latex gasket at its sides (folded edge) and gently stretch horizontally. Inspect for cracks and deterioration. Repeat this procedure until the entire surface of the latex gasket has been inspected. If cracks or deterioration are identified, discard neck seal.

4. Examine neck seal seam tape for integrity. If tape has delaminated, deteriorated or has lost its integrity discard neck seal.

5. Verify inspection and/or repair and/or fit.

6. Document in accordance with COMNAVAIRFORINST 4790.2.

5-144. O-LEVEL FITTING OF THE NECK SEAL UNIT TO THE AIRCREWMEMBER. Neck seal units come in only one size and are trimmed to fit. Type I neck seal units are for the men's CWU-86/P and type II neck seal units are for the woman's CWU-87/P coverall. The latex gasket of the neck seal unit can be trimmed at the initial fitting if necessary. If no excessive seal restriction exists, and seal fit is acceptable to the aircrewmember, then do not trim the latex gasket. Latex gasket of the neck seal unit shall fit snugly and remain in direct contact with the neck through all normal head movements. Neck seal gaskets are manufactured with the trim lines spaced 1/4 inch apart, pre-molded into the latex rubber of the neck seal. Table 5-17 shows the relationship between the aircrewmember's neck size and the pre-molded trim lines on the latex neck seal. Refer to Table 5-17 for fitting/sizing information. To find the aircrewmembers neck size proceed as follows:

Materials Required

Quantity	Description	Reference Number
As Required	Chalk	7510-00-170-9315 or equivalent/ commercial
	or	
As Required	Pencil, Wax (China Marking)	7510-00-264-4612 or 7510-00-223-6676

CAUTION

Trim neck seal with extreme caution. A smooth trim line is essential. Avoid nicking latex, as this will result in tearing seal when donning and doffing.

1. Neck circumference: Locate voice box (Adam's apple). If having trouble finding it, ask individual to swallow, the voice box will visibly move up and down. Measure neck at level of the voice box. The tape may not be parallel to the floor, since the measurement should be taken with the tape perpendicular to the long axis of the neck. Record the neck measurement.

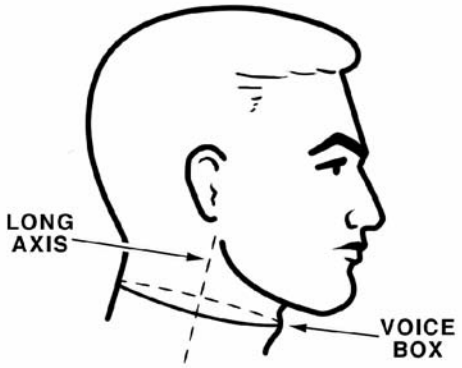

Step 1 - Para 5-144

CAUTION

Excessive trimming could result in loose seals that leak and necessitate replacement. To ensure a well fitting neck seal and to avoid any chance of cutting the neck seal too big, always err on the side of caution when trimming the neck seal. When in doubt about which line would best fit an individual aircrewman, trim the line one size above that which was determined in step 2 and then trim down one additional trim line if necessary.

2. Refer to Table 5-17 to locate the trim line corresponding to the measurement obtained in step 2. Carefully trim neck seal along whichever pre-molded line that best corresponds to the aircrewmember's neck size. The best technique is to cut in one smooth motion and avoid repeated small snips that could nick and ultimately tear the neck seal.

3. After trimming seal, have aircrewmember don coverall to determine seal restriction and water-sealing characteristics.. If neck seal gasket is still too tight continue to trim the neck seal gasket one trim line at a time until the neck seal fits the aircrewmember.

4. Verify fitting.

5. Forward coveralls to I-Level for leak check.

6. Document in accordance with COMNAVAIRFORINST 4790.2.

5-145. O-LEVEL REPAIRS OF NECK SEAL UNIT. Repairs of the latex gasket are not authorized at any level of maintenance. Repairs to the fabric panel and the seam tape attaching the latex gasket to the fabric panel are authorized but is an I-Level function.

5-146. O-LEVEL REPLACEMENT OF THE NECK SEAL UNIT. Removal and replacement of the neck seal unit is an I-Level function. O-Level shall inspect and fit the replacement neck seal unit to the aircrewmember and then forward new neck seal unit and coverall to I-Level for removal and replacement. The neck seals come in two different configurations, Type I for men and Type II for women. Ensure that the correct replacement neck seal unit is ordered for the individual aircrewmember.

5-147. O-LEVEL SIZING THE ANTIEXPOSURE SOCKS TO THE AIRCREWMEMBER. The anti-exposure socks are available in 8 sizes for both the left and right foot. Refer to Table 5-18 for the size that corresponds to the aircrewmember's boot size range.

5-148. O-LEVEL FITTING OF THE ANTI-EXPOSURE SOCKS TO THE AIRCREWMEMBER. The size of the antiexposure socks (Table 5-18) shall be gpverned to the aircrewmember's boot size. To determine the size socks and boots required, the aircrewmember should don a pair of heavy wool socks, and then don a pair of anti-exposure socks corresponding to normal boot size. The socks should fit snugly to prevent wrinkles or bulk in the boot but should not be fitted too tightly. The aircrewmember should then don a boot and assure that the fit is comfortable.

5-149. O-LEVEL INITIAL INSTALLATION OF ANTI-EXPOSURE SOCKS TO THE COVERALL. For initial installation proceed as follows:

Materials Required

Quantity	Description	Reference Number
As Required	Chalk	7510-00-170-9315 or equivalent/ commercial
As Required	Pencil, Wax (China Marking)	7510-00-264-4612 or 7510-00-223-6676
2	Socks, Anti-Exposure	3769AS130 -1 to -7 NIIN TBD
As Required	Thread, Nylon, Aramid, High Temperature Resistant, Aromatic Spun Staple, GREEN	MIL-T-83193 8310-00-405-2252

CAUTION

High temperature resistant thread shall be used unless not available in supply. High temperature resistant thread does not propagate flame; nylon thread does.

WARNING

Sock attachment panel must have at least 1 inch remaining after the measurements in steps 4 through 7.

1. Orient yourself to the various pieces and parts of the CWU-86/P and CWU-87/P coverall leg so that you are very familiar with the coveralls when trying to follow the instructions below.

Step 1 - Para 5-149

2. Have aircrewmember don the assembly (including anti-exposure socks but no hood or gloves), the appropriate torso harness (if applicable), and proper size of heavy wool socks.

3. Mark coveralls legs and socks (L and R) on inside and front and back to ensure socks are matched to correct leg during installation.

4. Have aircrewmember sit in a straight-back chair with legs drawn back, heels directly below kneecaps and feet flat on floor. Fold the outer coverall pant leg up and over the sock attachment panel so that the sock attachment panel is exposed for fitting. Tuck the sock attachment panel into the anti-exposure sock.

Step 4 - Para 5-149

NOTE

If aircrewmembers leg length is such that allowances outlined in steps 4 though 7 are not possible, refer to paragraph 5-159 for coverall leg extending instructions.

Removing top 2 inches of sock at initial installation is intended to ensure adequate coverall leg material remains for future sock replacements.

5. Turn top 2 inches of sock down, forming a temporary cuff.

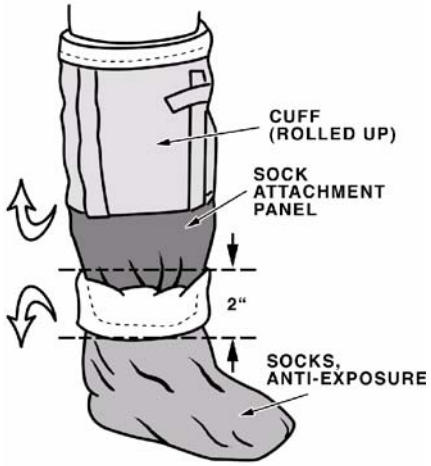

Step 5 - Para 5-149

6. Mark the circumference of the coveralls sock attachment panel where it meets the top of the folded socks.

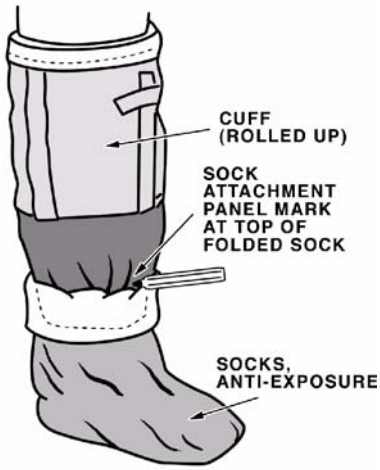

Step 6 - Para 5-149

7. Have aircrewmember doff socks and coveralls.

8. Remove top 2 inches of sock with a pair of sharp scissors.

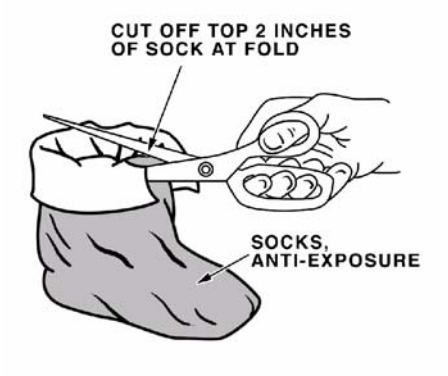

Step 8 - Para 5-149

9. Remove excess material from sock attachment panel by cutting a line 1 inch below the circumferential mark applied in step 5. Ensure sock attachment panel is cut perpendicular to lengthwise direction of leg. Make alignment marks at the front, back and both sides of the sock attachment panel and sock to ensure sock will be properly aligned with panel during attachment.

Step 9 - Para 5-149

NOTE

Due to slight differences in circumference of pant and sock opening, it is recommended that alignment marks be added to both items before sewing. Make marks at front, back and both sides, equally spaced around circumference of both openings. It may be necessary to manually induce an uneven feeding of materials into sewing machine in order to compensate for differences in sock and coveralls leg circumferences, thereby minimizing pleats or puckers.

10. Turn coveralls inside out and push outer pant leg up and out of the way into the coverall leg.

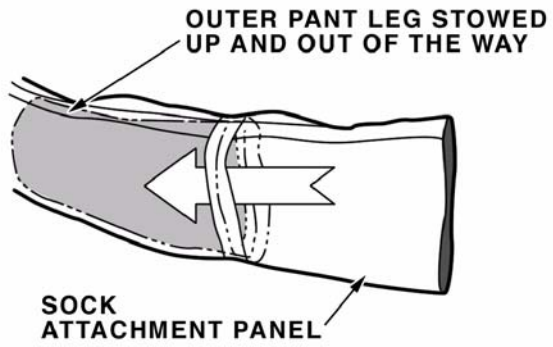

Step 10 - Para 5-149

11. Lay coveralls on a flat surface, face up.

NOTE

When attaching socks to coveralls, ensure right sock is on right coveralls' leg and left sock is on left coveralls' leg, and that sock toes face forward.

12. Insert sock (with right side, color side, out) up into the sock attachment panel so that right sides of sock and sock attachment panel are facing each other and the sock toe is pointing up (toward front of coverall). Orient sock so that front of sock is lined up with center front of leg.

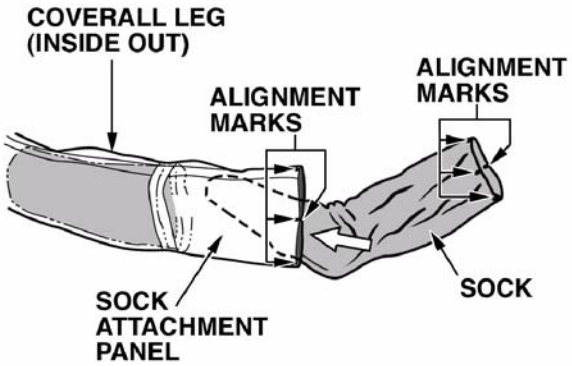

Step 12 - Para 5-149

13. Beginning at front of leg, with leg and sock alignment marks matched, attach sock to sock attachment panel with one row of stitches, 3/8 inch from cut edges, 5 to 7 stitches per inch. Overlap stitching 1 inch. Do not backstitch.

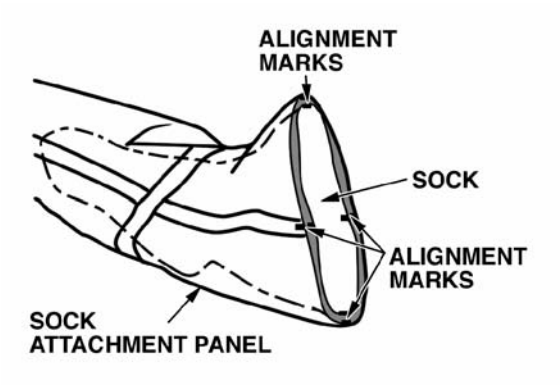

Step 13 - Para 5-149

14. After removing coverall from sewing machine, pull sock out through bottom of leg opening, exposing cut edges of seam. Coverall leg and sock will be inside out.

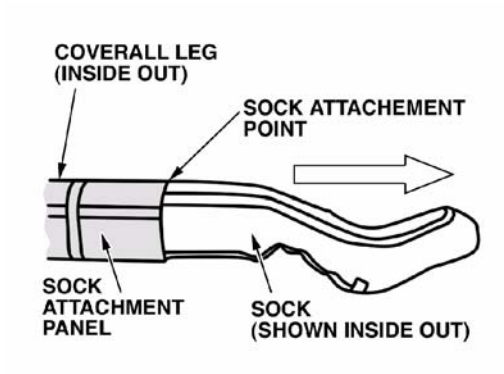

Step 14 - Para 5-149

15. Verify repairs.

16. Forward coverall to I-Level for application of seam tape and the leak test.

17. Document in accordance with COMNAVAIRFORINST 4790.2.

5-150. O-LEVEL REPAIR PROCEDURES FOR ANTI-EXPOSURE SOCK. Repairing and reinforcing pinholes, small tears, small rips and small porous areas of anti-exposure socks is an I-Level function and is covered under I-Level repair. O-Level shall forward coverall to I-Level for repair.

5-151. O-LEVEL REPLACEMENT OF ANTI-EXPOSURE SOCKS. Removal and replacement of anti-exposure socks is an I-Level function and is covered under I-Level repair. O-Level shall select correct size replacement antiexposure sock in accordance with Table 5-18 and forward replacement anti-exposure socks and coverall to I-Level for removal and replacement.

5-152. O-LEVEL MODIFICATION OF THE TETHER LINE ON ANTI-EXPOSURE HANDWEAR. When using the Emergency Neoprene Gloves the retainer snap hook must be removed and replaced with hook fastener tape. When using the HGU-12/P Anti-Exposure Mittens the tie cord must be modified to add hook fastener tape to the cord ends to facilitate storage inside the arm pockets of the coverall. To modify the hand wear proceed as follows:

Materials Required

Quantity	Description	Reference Number
As Required	Fastener Tape, Nylon, Hook, 1-inch Width, GREEN	MIL-F-21840 8315-00-405-2266

NOTE

All stitching shall be in accordance with ASTM-D-6193, Type 301 lockstitch, 5 to 7 stitches per inch with a minimum overstitch of 1/2 inch.

1. Neoprene Gloves. The gloves come from supply with a tether already installed. However, the snap at the end of the tether shall be replaced with hook fastener tape. To replace the tether line retainer snap, proceed as follows:

a. Remove stud/eyelet from tether line end by cutting tether just above the stud/eyelet and sear the edge.

b. Cut a 1-inch by 1-inch length of hook tape and sear the cut edges.

c. Center hook tape over the end of the tether line even at the edge.

d. Sew the hook tape to the tether line webbing using a boxstitch 1/16 inch from the edge of the webbing.

e. Stow the glove in the arm pocket and attach the hook tape to the pile tape at a corner opening of the pocket, where the hook and pile tape ends meet.

f. Close the cover of the glove pocket and mate the hook and pile tape of the pocket to the sleeve.

2. HAU-12/P Anti-Exposure Mittens. The mittens come from supply with tie cords attached to each individual mitten. However the ends of the cord must be modified in order to facilitate attachment to the coverall sleeve pocket. To modify the Mittens proceed as follows:

a. Tie a knot at the end of each mitten cord leaving a 1/2 inch inch length of cord at the end of the cord.

b. Cut a 1-inch by 1-inch piece of hook fastener tape and sear the raw edges.

c. Fold (with hook facing out) in half, sandwiching the cord knot and cord end within and between the two sides of the hook fastener tape.

d. Securely stitch the folded hook fastener tape together ensuring that the cord end and knot are stitched securely in the middle of the hook fastener tape.

e. Stow the glove in the arm pocket and attach the hook tape to the pile tape at a corner opening of the pocket, where the hook and pile tape ends meet.

f. Close the cover of the glove pocket and mate the hook and pile tape of the pocket to the sleeve.

3. Verify inspection and/or repair and/or fit.

4. Document in accordance with COMNAVAIRFORINST 4790.2.

5-153. O-LEVEL MAINTENANCE INSPECTIONS.

5-154. O-LEVEL PLACE-IN-SERVICE (PIS) INSPECTION/PROCEDURES. Upon receipt from supply and/or when removing from Long Term Storage CWU-86/P and CWU-87/P coveralls shall be placed in service as follows:

1. Size and fit assembly to aircrewmember, using procedures in paragraphs 5-136 through 5-149.

2. Perform the 180-Day Inspection in accordance with paragraph 5-155 and forward coverall to I-Level (I-level) for completion of the place-in-service inspection.

3. Document in accordance with COMNAVAIRFORINST 4790.2 as a Place-In-Service Inspection.

4. Verify inspection and/or repair and/or fit.

5. Document in accordance with COMNAVAIRFORINST 4790.2.

5-155. O-LEVEL 180-DAY INSPECTION. The 180-Day Inspection shall be performed by O-Level maintenance as part of the initial Place-In-Service inspection and every 180 days thereafter. To perform the 180-Day Inspection proceed as follows:

Materials Required

Quantity	Description	Reference Number
As Required	Lubricant Stick	Zipperease 9510-00-999-7548

1. Upon receipt from supply, organizational level shall inspect all CWU-86/P and CWU-87/P coveralls in accordance as follows:

2. If required, clean assembly components in accordance with paragraph 5-163.

3. Inspect coveralls assemblies as follows:

a. Inspect surface of coverall, wrist seals, neck seals, and socks for damaged fabric, holes and loose or broken stitching.

b. Inspect slide fasteners for damaged chain, loose/missing teeth and stops, improper chain alignment, damaged or split end seal blocks, damaged or missing pull tabs (metal and fabric), and loose/frayed slide fastener tape.

c. Turn coveralls inside out, repeat steps b and c, and inspect seam tapes for looseness or fraying.

d. Turn coveralls right side out. Inspect slide fastener for proper operation. Inspect overall condition of coverall.

e. If needed, apply a coating of lubricant to slide fasteners using a lubricant stick.

f. If I-Level repairs are necessary, forward coveralls with damage chart (Figure 5-29 or Figure 5-30)

detailing discrepancies to I-Level for repair and/or further testing.

4. If excessive damage is found, the CD/QAR shall determine if repairs shall be completed or the garment shall be considered a quality deficiency.

5. In general, the coveralls are expected to be serviceable off the shelf after seven years of sealed, dark storage.

6. Document Inspection in accordance with COMNAVAIRFORINST 4790.2.

5-156. O-LEVEL 360-DAY INSPECTION. The 360-Day Inspection shall be performed jointly between the O-Level and I-Level on all CWU-86/P and CWU-87/P coveralls as part of the initial place-in-service inspection and every 360 days thereafter. To perform the 360-Day Inspection O-Level shall perform all steps of the 180-Day Inspection in accordance with paragraph 5-155, record any discrepancies on the damage chart, document the inspection IAW COMNAVAIRFORINST 4790.2, and forward the coveralls to I-Level for completion of 360-Day inspection.

5-157. O-LEVEL REPAIR AND FABRICATION PROCEDURES. Repairs and fabrications shall be limited to those listed in Table 5-13. See paragraphs 5-122 "Definitions", 5-124 "Damage Dimensions", 5-126 "Individual Component Repair Limits" and Table 5-13 for complete definitions and repair limitations. Emergency Repair Procedures are outlined in paragraph 5-170.

5-158. O-LEVEL REPAIR/REPLACEMENT OF SEAM TAPE. Repair and replacement of seam tape is an I-Level function and is covered under I-Level repairs.

5-159. O-LEVEL PROCEDURES FOR INCREASING LEG LENGTH OF COVERALLS. Increasing the leg length of coveralls is a joint O-Level and I-Level function. Increasing coveralls leg length shall be accomplished for those individuals whose leg length does not allow adequate sock and coveralls length or, when too much fabric has been removed during sock replacement. In these extreme cases, coveralls legs shall be lengthened as follows:

Materials Required

Quantity	Description	Reference Number
As Required	Chalk	7510-00-170-9315 or equivalent/ commercial
	or	
As Required	Pencil, Wax (China Marking)	7510-00-264-4612 or 7510-00-223-6676
As Required	Cloth, Special	MIL-C-85637, 8475-01-196-0076
As Required	Thread, Nylon, Aramid, High Temperature Resistant, Aromatic Spun Staple, GREEN	MIL-T-83193 8310-00-405-2252

1. Orient yourself to the various pieces and parts of the CWU-86/P and CWU-87/P coverall leg so that you are very familiar with the coveralls when trying to follow the instructions below.

Step 1 - Para 5-159

2. Have aircrewmember don complete assembly (underwear, liner, socks) including PCU-Series torso harness, if applicable, and proper size of CWU-86/87/P anti-exposure socks.

3. Fold outer coverall leg up over the knee of the coverall so that the sock attachment panel is exposed.

4. Turn top 2 inches of sock down forming a temporary cuff.

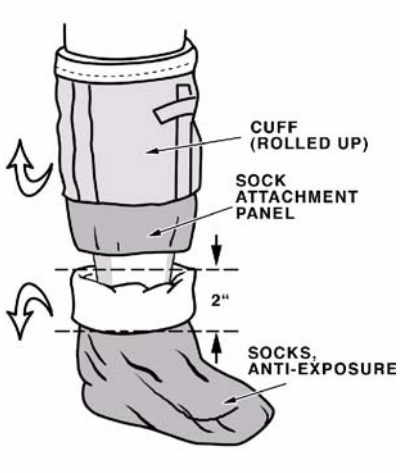

Step 4 - Para 5-159

5. Measure from bottom of sock attachment panel to 3 inches below the sock's temporary fold line. This measurement will be used in cutting material for leg extension.

Step 5 - Para 5-159

6. Have aircrewmember doff coveralls.

7. Measure circumference of bottom of sock attachment panel, and add 3/4 inch to this measurement for seam allowance. The most accurate way to find the circumference is to lay the attachment panel on a flat surface and measure from edge to edge. Double this measurement and you will get the circumference. Add 3/4 inch seam allowance to this measurement. This measurement is second dimension used in cutting material for extension.

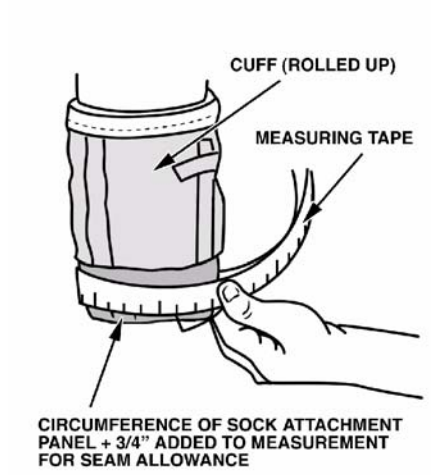

Step 7 - Para 5-159

8. Cut a rectangular piece of fabric from new Special Cloth using dimensions determined in steps 5 and 7. Mark off the leg length measurement (step 5) lengthwise in the warp direction of the fabric. Mark off the leg circumference (step 7) in the crosswise direction (perpendicular to the warp). This will ensure that the fabric in the extension panel will stretch in the same direction as the fabric in the leg of the coverall.

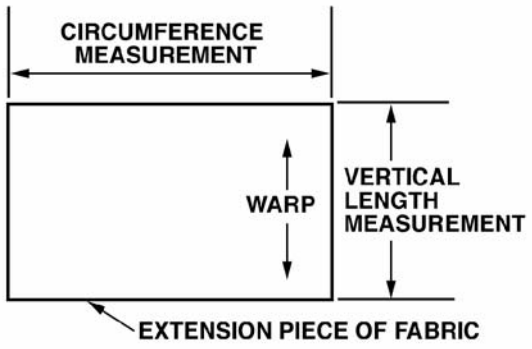

Step 8 - Para 5-159

9. Join short sides of this material by folding in half (face to face) and sewing one row of stitches (5 to 7 stitches per inch), 3/8 inch from cut edges; then sew a row of top stitching, 1/8 inch from folded seam.

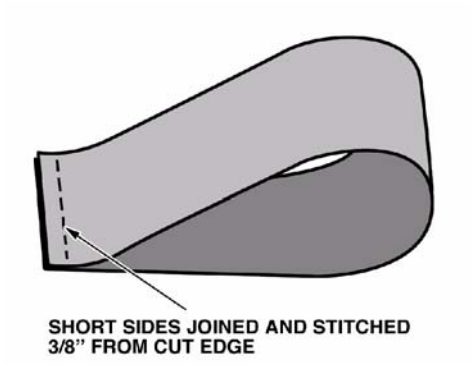

Step 9 - Para 5-159

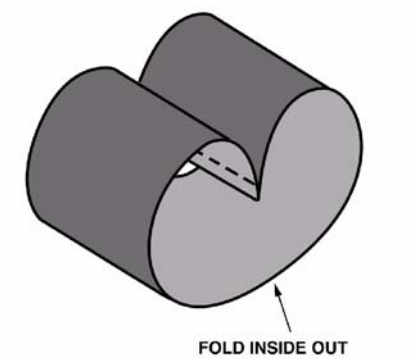

Step 9a - Para 5-159

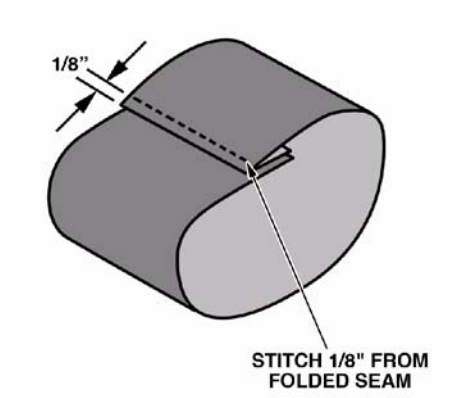

Step 9b - Para 5-159

10. Attach extension to coveralls sock attachment panel with two rows of stitching, (LSq seam) as shown. Place leg extension construction seam adjacent to, but not directly over, sock panel inseam. Make first row of stitches 3/8 inch from cut edges, and top stitching 1/8 inch from folded seam. Stitching shall be 5 to 7 stitches per inch.

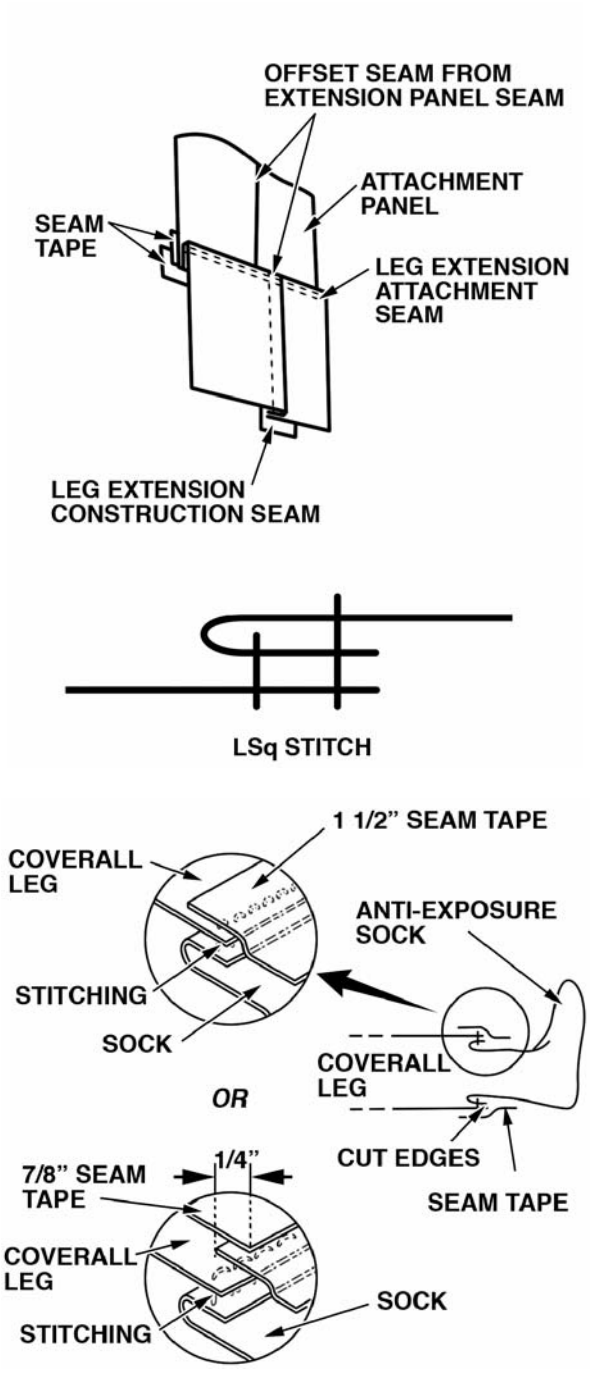

Step 10 - Para 5-159

11. Turn coveralls inside out. Tuck the outer pant leg up in to the coverall leg so that it is up and out of the way.

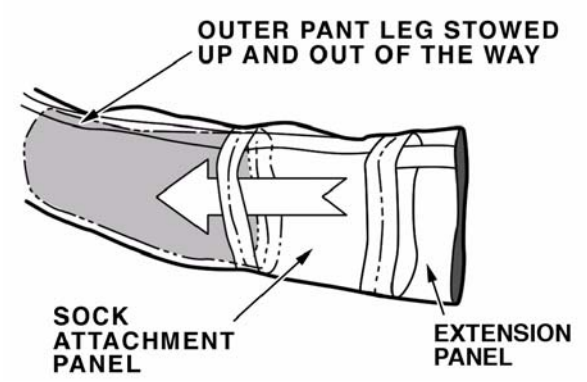

Step 11 - Para 5-159

12. Insert sock with right side (color side) out, up in to the sock attachment panel so that right sides of sock and sock attachment panel are facing each other and the sock toe is pointing up (toward front of coverall). Orient sock so that front of sock is lined up with center front of leg.

CAUTION

Proper positioning of the coverall leg with sock attached is essential. Ensure that the sock is inserted in to the coverall leg with the sock facing up toward front of coverall.

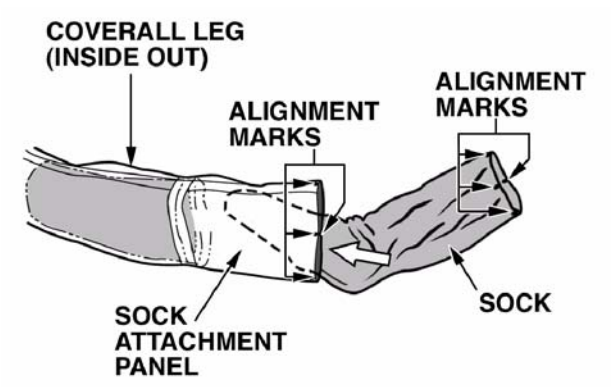

Step 12 - Para 5-159

13. Beginning at front of leg attach sock attachment panel and extension panel to the sock (seams offset) with one row of stitches, 3/8 inch from cut edges, 5 to 7 stitches per inch, using nylon size E thread. Overlap stitching 1 inch. Do not backstitch.

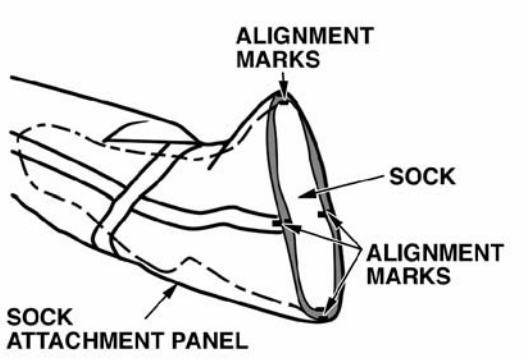

Step 13 - Para 5-159

14. After removing coverall from sewing machine, pull sock out through bottom of leg opening, exposing cut edges of seam. Coverall leg and sock will be inside out.

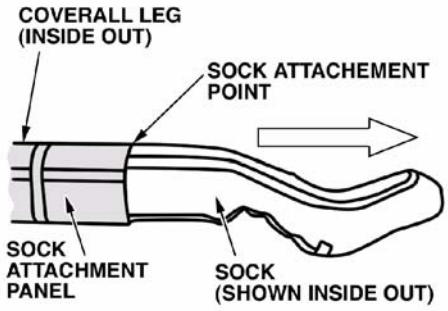

Step 14 - Para 5-159

15. Fold cut edges of seam down over sock. Make fold as near stitch line as possible.

16. After completing leg extensions check for proper fit.

17. Verify repairs.

18. Forward coverall to I-Level for installation of seam tape and Place-In-Service Inspection.

19. Document in accordance with COMNAVAIRFORINST 4790.2.

5-160. O-LEVEL PROCEDURES FOR INCREASING SLEEVE LENGTH OF COVERALLS. Increasing the sleeve length of coveralls is a joint O-Level and I-Level function. Increasing coveralls sleeve length shall be accomplished for those individuals whose sleeve length does not allow adequate sleeve length or, when too much fabric has been removed during wrist seal cuff replacement.

Materials Required

Quantity	Description	Reference Number
As Required	Chalk	7510-00-170-9315 or equivalent/ commercial
	or	
As Required	Pencil, Wax (China Marking)	7510-00-264-4612 or 7510-00-223-6676
As Required	Cloth, Special	MIL-C-85637, 8475-01-196-0076
As Required	Thread, Nylon, Aramid, High Temperature Resistant, Aromatic Spun Staple, GREEN	MIL-T-83193 8310-00-405-2252

1. After the coveralls have been fit, and the need for sleeve extension has been determined, have the aircrewmember doff the coverall.

2. Measure and mark the coverall sleeve midway between the bottom of the glove pocket and the visible seam in the available adjustment area. Using this measurement, continue to mark and measure until the sleeve has a circumference line around the sleeve equidistance from the visible seam.

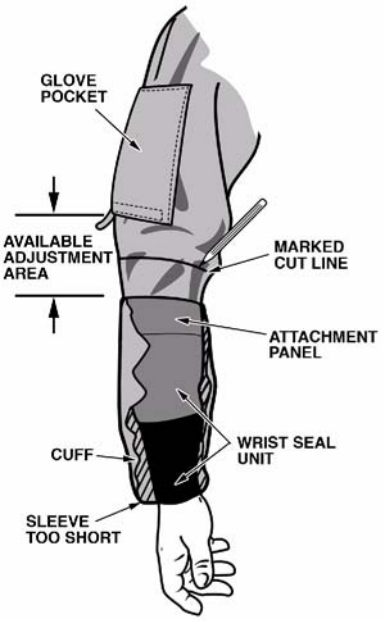

Step 2 - Para 5-160

3. Cut sleeve off at mark, made in step 2.

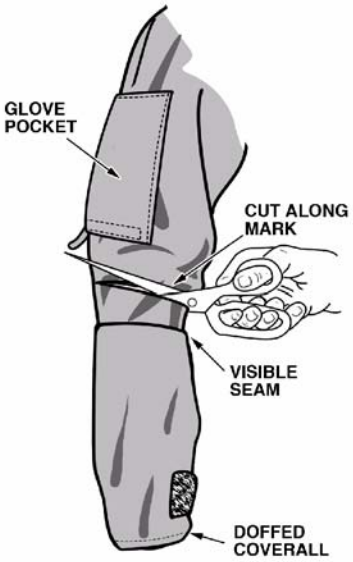

Step 3 - Para 5-160

4. Have aircrewmember don coverall and sleeve with arm extended to side. Measure widest point of gap between cut edges and add 1 inch to this measurement. This total measurement will be used in cutting material for sleeve extension.

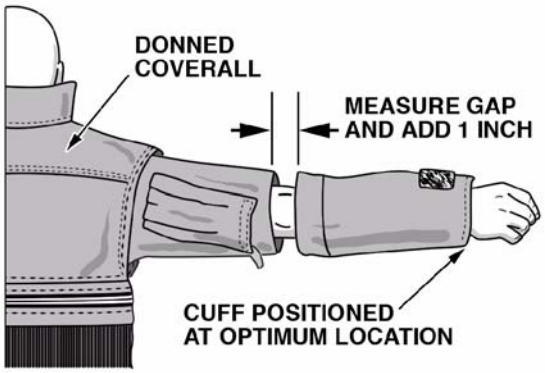

Step 4 - Para 5-160

5. Have aircrewmember doff coverall and sleeves.

6. Measure circumference of cut edge of sleeve and add 3/4 inch to this measurement for seam allowance. The most accurate way to find the circumference is to lay the attachment panel on a flat surface and measure from edge to edge. Double this measurement and you will get the circumference. Add 3/4 inch seam allowance to this measurement. This measurement is second dimension used in cutting material for extension.

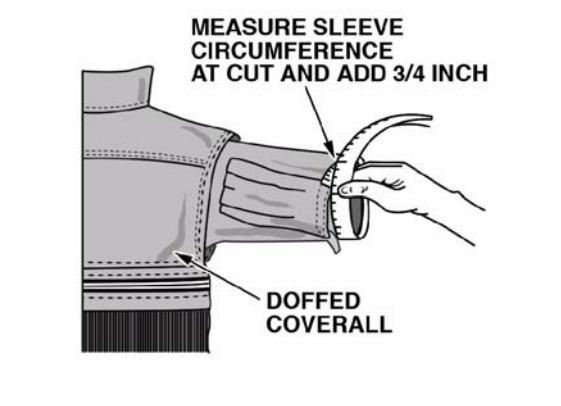

Step 6 - Para 5-160

7. Cut a rectangular piece of fabric using new Special Cloth using dimensions determined in steps 4 and 6. Mark off the arm length measurement (step 4) lengthwise in the warp direction of the fabric. Mark off the arm circumference (step 6) in the cross-wise direction (perpendicular to the warp). This will ensure that the fabric in the extension panel will stretch in the same direction as the fabric in the sleeve of the coverall.

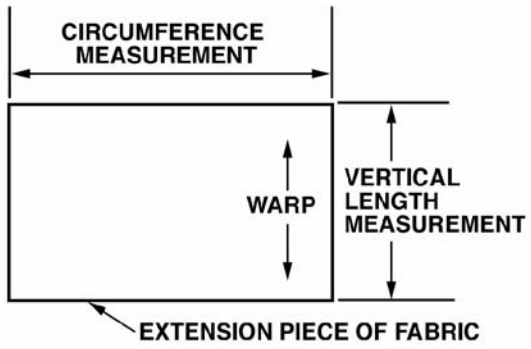

Step 7 - Para 5-160

8. Join short sides of this material by folding in half (face to face) and sewing one row of stitches (8 to 10 stitches per inch), 1/4 inch from cut edges; then apply a row of top stitching, 1/4 inch from folded seam.

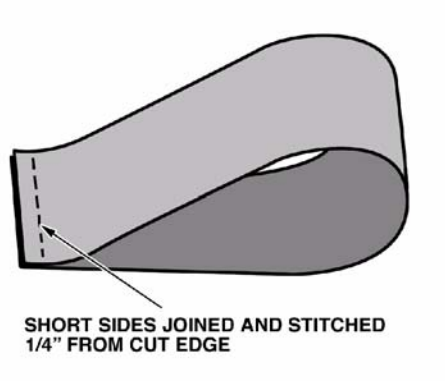

Step 8 - Para 5-160

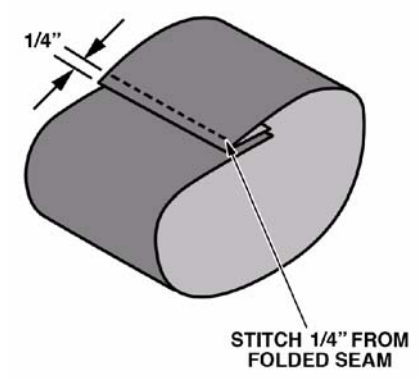

Step 8a - Para 5-160

9. Attach extension to bottom half of sleeve with 2 rows of stitching, (LSq 2 seam) seam as shown. Place sleeve extension construction seam adjacent to, but not directly over sleeve underarm seam. Make first row of stitches 1/4 inch from cut edges, and top stitching 1/4 inch from folded seam. Stitching shall be 5 to 7 stitches per inch.

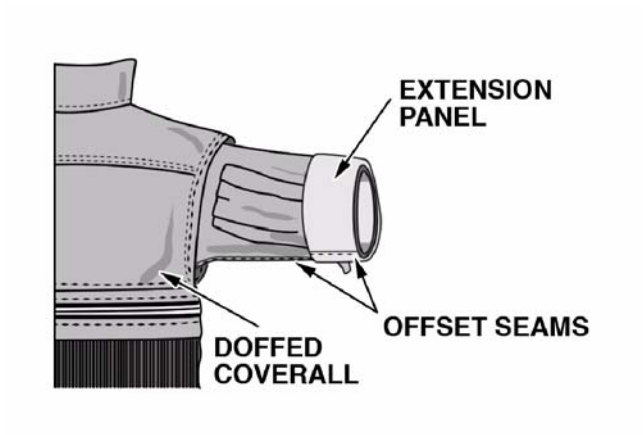

Step 9 - Para 5-160

10. Turn coverall inside out and slide the sleeve bottom (wrist seal first) into to the now lengthened sleeve so that right sides of the material are together. Ensure new sleeve bottom is positioned so that the wrist adjustment strap is in the proper position on the sleeve when pulled right side out.

CAUTION

New cuff bottom piece contains the wrist adjustment strap for tightening the outer wrist cuff around the wrist of the aircrew-member. Ensure that the cuff piece is placed into the sleeve so that the new cuff bottom has the wrist adjustment strap aligned correctly.

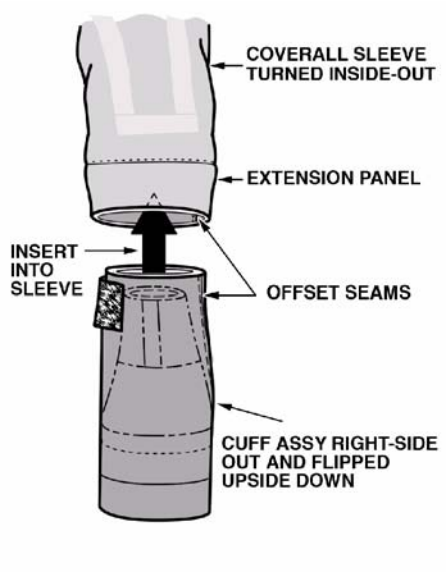

Step 10 - Para 5-160

11. Attach sleeve with extension and cuff assembly to bottom half of coverall sleeve with one row of stitching, Make first row of stitches 1/2 inch from cut edge.

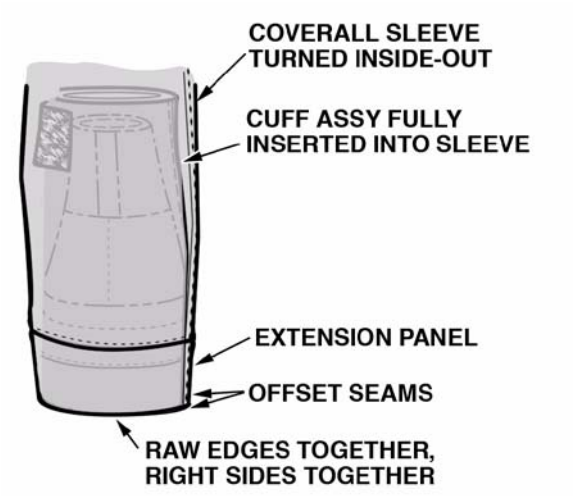

Step 11 - Para 5-160

12. Pull wrist cuff out, and with the sleeve still inside out, fold seam over and topstitch material down, stitching 1/4 inch from raw edges. Stitching shall be 5 to 7 stitches per inch.

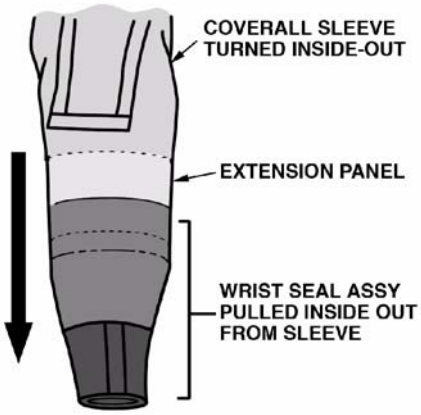

Step 12 - Para 5-160

13. After completing lengthening of sleeves, turn coveralls right side out and check for proper fit.

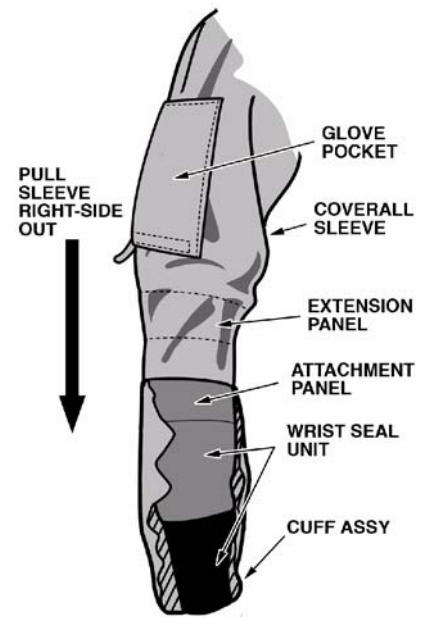

Step 13 - Para 5-160

14. Verify repairs.

15. Forward coveralls to I-Level for application of seam tape and the leak check.

16. Document in accordance with COMNAVAIR-FORINST 4790.2.

5-161. O-LEVEL PROCEDURES FOR SHORTENING SLEEVE LENGTH OF COVERALLS. Shortening shall be accomplished for those individuals with so much excess sleeve length that it is in the way or uncomfortable. In these extreme cases, coverall sleeves shall be lengthened as outlined below.

Materials Required

Quantity	Description	Reference Number
As Required	Chalk	7510-00-170-9315 or equivalent/ commercial
	or	
As Required	Pencil, Wax (China Marking)	7510-00-264-4612 or 7510-00-223-6676
As Required	Thread, Nylon, Aramid, High Temperature Resistant, Aromatic Spun Staple, GREEN	MIL-T-83193 8310-00-405-2252

1. Have aircrewmember don the coverall and stand with hanging down at his/her side slightly extended away from the body.

Step 1 - Para 5-161

2. Create a fold of excess material by overlapping excess material in the "available adjustment area" on the coverall sleeve between the glove pocket and the visible seam. With a china marker or chalk mark the excess length of sleeve material in the two places shown in step 2.

CAUTION

There is very little excess material between the glove pocket and the visible seam to remove. In order to remove excess material and still be able to reattach the sleeve pieces and apply the seam tape there must be a minimum of one inch below the glove pocket and one inch above

the visible seam remaining after completing steps 2 through 6. If these minimums would not be present then do not cut the sleeve off and attempt to reattach; custom order the aircrewmember a coverall in accordance with Chapter 10.

CAUTION

Do not mark coverall with ballpoint pen or lead pencil. Use only china marking pencil or chalk.

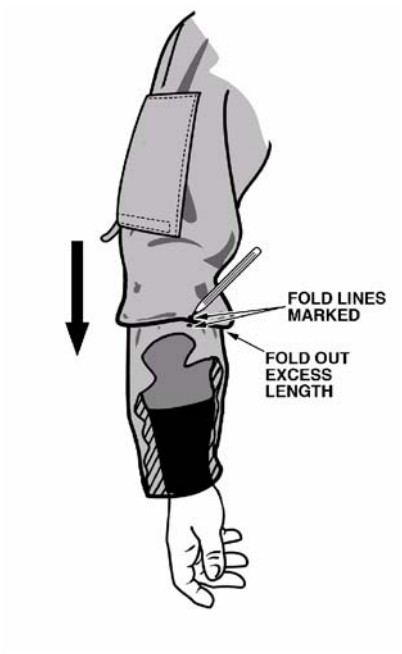

Step 2 - Para 5-161

3. Have aircrewmember doff the coverall.

4. Extend sleeve material exposing the two parallel lines drawn in step 4.

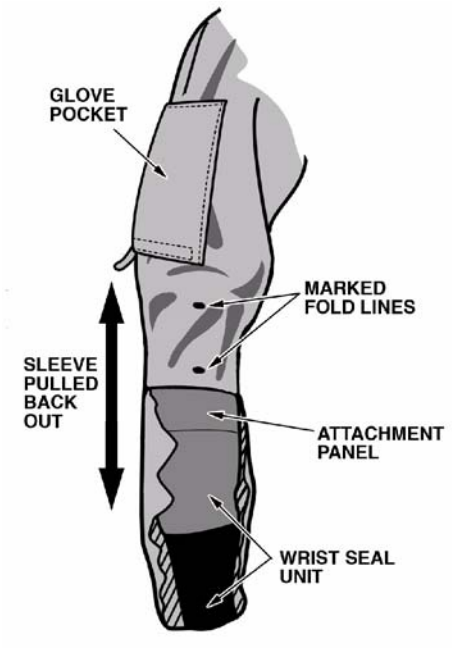

Step 4 - Para 5-161

5. Measure the length between the top mark closest to the glove pocket made in step 2 and the visible seam. Use this length to mark a measured circle completely around the circumference of the sleeve, equidistance from the visible seam. Repeat the procedure for the bottom mark made in step 2 so that the result is two perfectly perpendicular lines around the circumference of the sleeve.

CAUTION

There is very little excess material between the glove pocket and the visible seam to remove. Before cutting any material ensure that a minimum of one full inch of material remains below the glove pocket and one full inch of material remains above the visible seam. If minimum material would not remain after cutting the material then do not cut the sleeve and attempt to reattach; custom order the aircrewmember a coverall in accordance with Chapter 10.

6. Measure and mark 1/2 inch down from the top line and 1/2 inch up from the bottom line for seam allowance.

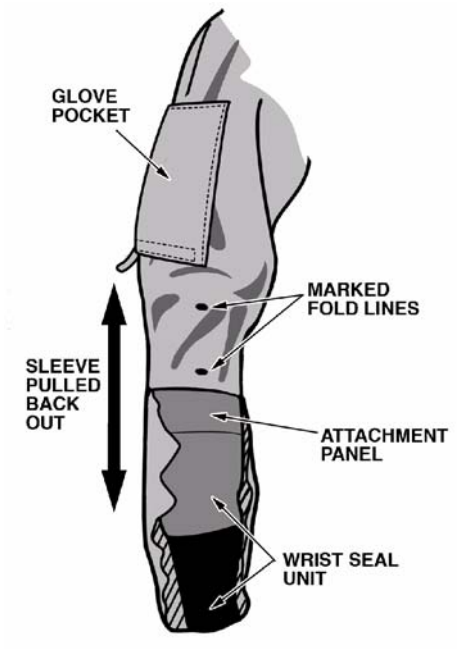

Step 6 - Para 5-161

7. Cut sleeve off at the two cutting lines shown in step 6. Remove and discard the center excess material from the sleeve.

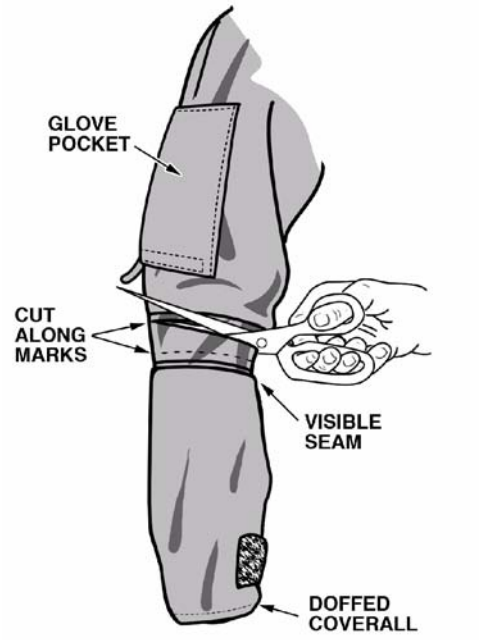

Step 7 - Para 5-161

8. Turn the coverall sleeve inside out.

9. Turn coverall inside out and slide the sleeve bottom (wrist seal first) into to the now shortened sleeve so that right sides of the material are together. Ensure new sleeve bottom is positioned so that the wrist adjustment strap with fastener tape is in the proper position on the sleeve when pulled right side out.

CAUTION

New cuff bottom piece contains the wrist adjustment strap for tightening the outer wrist cuff around the wrist of the aircrewmember. Ensure that the cuff piece is place in to the sleeve so that the new cuff bottom has the wrist strap adjustment aligned correctly.

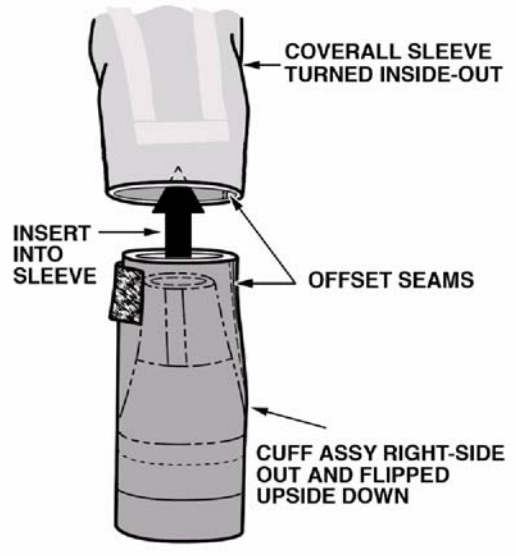

Step 9 - Para 5-161

10. Attach sleeve (cuff attached) to bottom half of coverall sleeve with one row of stitching, Make first row of stitches 1/2 inch from cut edge.

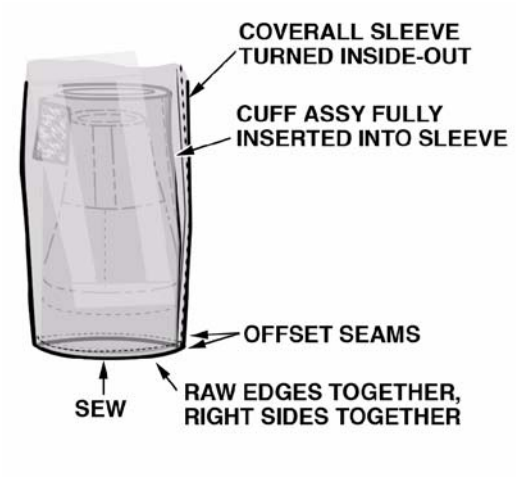

Step 10 - Para 5-161

CAUTION

Ensure that the outer wrist cuff is pulled up and out of the way into the inside out sleeve before top stitching the folded seam.

11. Pull wrist cuff out, and with the sleeve still inside out fold seam over and topstitch material down, stitching 1/4 inch from raw edges. Stitching shall be 5 to 7 stitches per inch.

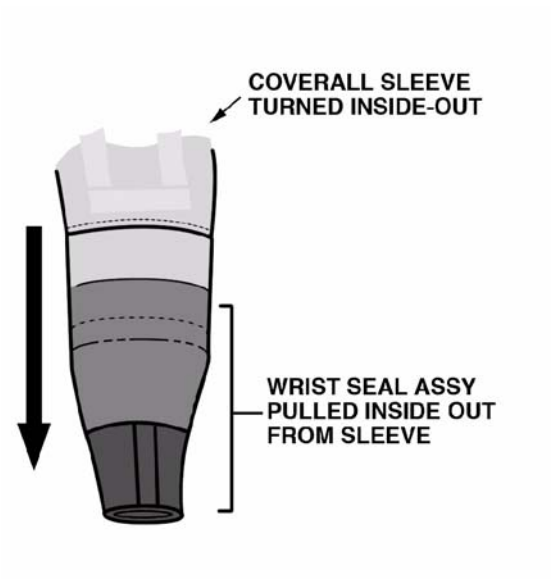

Step 11 - Para 5-161

12. After completing shortening of sleeves, turn coveralls right side out and check for proper fit.

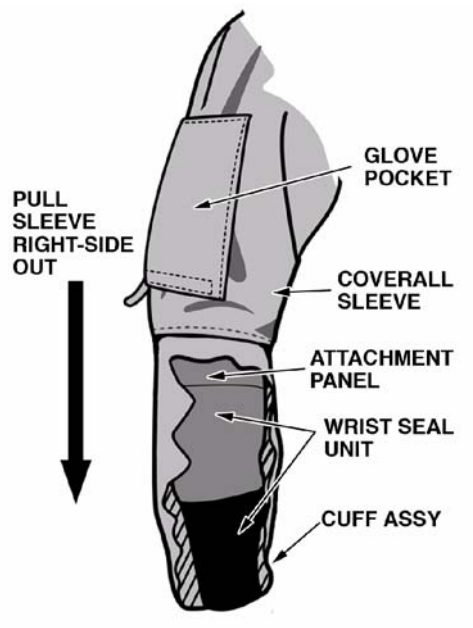

Step 12 - Para 5-161

13. Verify repairs.

14. Forward coveralls to I-Level for application of seam tape and the leak check.

15. Document in accordance with COMNAVAIR-FORINST 4790.2.

5-162. O-LEVEL OVERVEST REPAIR PROCEDURES. Repair is limited to patching holes or tears less than 2-inch in length, replacement of slide fastener, restitching loose or broken stitching, and replacement of hook and pile tapes.

Materials Required

Quantity	Description	Reference Number
As Required	Cloth, Plain Weave, Fire Resistant Aramid, GREEN	MIL-C_83429 8305-01-147-2064
As Required	Fastener Tape, Nylon, Hook, 1-inch Width, BLACK	MIL-F-21840 8315-00-935-6761
As Required	Fastener Tape, Nylon, Hook, 1-inch Width, GREEN	MIL-F-21840 8315-00-405-2266

As Required	Fastener Tape, Nylon, Hook, 2-inch Width, BLACK	MIL-F-21840 8315-00-926-4931
As Required	Fastener Tape, Nylon, Hook, 2-inch Width, GREEN	MIL-F-21840 8315-00-405-2267
As Required	Fastener Tape, Nylon, Pile, 1-inch Width, BLACK	MIL-F-21840 8315-00-978-0113
As Required	Fastener Tape, Nylon, Pile, 1-inch Width, GREEN	MIL-F-21840 8315-00-405-2263
As Required	Fastener Tape, Nylon, Pile, 2-inch Width, BLACK	MIL-F-21840 8315-00-926-4930
As Required	Fastener Tape, Nylon, Pile, 2-inch Width, GREEN	MIL-F-21840 8315-00-405-2265
1	Slide Fastener	See Table 5-14
As Required	Thread, Nylon, Aramid, High Temperature Resistant, Aromatic Spun Staple, NATURAL	MIL-T-83193 8310-01-225-4672
	or	
As Required	Thread, Nylon, Aramid, High Temperature Resistant, Aromatic Spun Staple, GREEN	MIL-T-83193 8310-00-405-2252

1. Repair loose or broken stitching by restitching using type 301 lockstitch, 8 to 10 stitches per inch, with minimum 1-inch back or overstitch.

2. Small holes and tears, up to 2 inches in length or diameter, may be mended and/or darned on a sewing machine. To repair holes or tears larger than 1/2 inch in length or diameter, use patches. To patch, cut two pieces of aramid cloth at least 1 inch larger than the damaged area in all directions. Turn the edges of one patch under 1/4 inch, center the patch on the inside of the liner over the damaged area and sew the patch 1/8 inch from the folded edge. Turn the edges of the second patch under 1/4 inch, center the patch on the outside of the liner over the damaged area and stitch through all thicknesses, 1/16-inch to 1/8-inch from the folded edge.

3. Damaged hook and pile fastener tape shall be replaced with the same type and length of tape, and in the same manner and location as originally installed. Pile tape may be replaced by stitching through all layers of the overvest.

4. Damaged slide fasteners shall be replaced with the same type and length of tape, and in the same manner and location as originally installed.

5-163. O-LEVEL CLEANING AND TREATMENT OF CWU-86/P AND CWU-87/P COVERALLS. Repair is limited to patching holes or tears less than 2-inch in length, replacement of slide fastener, restitching loose or broken stitching, and replacement of hook and pile tapes.

1. For cleaning and treatment of coveralls, proceed as follows:

Materials Required

Quantity	Description	Reference Number
As Required	Detergent, General Purpose	MIL-D-16791 or Equivalent/commercial
As Required	Laundry Bag, Mesh	Commercially available
As Required	Trichloroethylene	O-T-634 6810-00-184-4800

CAUTION

Ensure that slide fasteners are closed prior to laundering to avoid accidental chafing. Do not dryclean and do not use fabric softeners, dryer sheets, bleach, starch or soap. These solutions are flammable and will impart their flammability to even flame resistant fabrics. Do not iron and do not launder or tumble dry in hot temperatures as heat will cause pilling. Do not use general shipboard or commercial laundry facilities. Trichloroethylene (dry cleaning fluid) shall be used for spot cleaning only.

1. Spots and areas suspected of having been in contact with acid compounds, grease, oil, etc., shall be swabbed with trichloroethylene.

2. Close slide fastener. Hand-launder or use an automatic washer that has a delicate cycle. Ensure water used is cold. Follow detergent manufacturer's recommendations for amount of detergent to use. Wash cycle shall not exceed 3 minutes.

3. Rinse garment 3 times. Use clean, fresh water for each rinse. Each rinse cycle shall be a minimum of one minute.

NOTE

If machine laundering and tumble drying, it is strongly recommended that the coverall be placed in a commercial laundry mesh bag to minimize potential abrasive wear.

4. Coveralls may be dried in a tumble dryer on the lowest heat setting for 20 minutes or the coveralls can be hung by shoulders on a wooden or plastic hanger in a well-ventilated area, away from sunlight, until dry.

5. When outside of coverall is dry, turn legs and socks inside out to dry.

6. Verify inspection and/or repair and/or fit.

7. Document in accordance with COMNAVAIRFORINST 4790.2.

5-164. INTERMEDIATE LEVEL (I-LEVEL) MAINTENANCE.

5-165. The following list outlines the procedures covered in the following paragraphs that I-level maintenance activities are authorized/responsible for with regard to the maintenance of the CWU-86/P and CWU-87/P Coveralls. Some of the functions are joint maintenance operations between O-level and I-Level (e.g. replacement of wrist seal); read individual paragraphs carefully for complete instructions.

5-166. I-Level 360-Day.
5-167. Air/Water Test Summarization.
5-168. Air Leak Test.
5-169. Water Leak Test.
5-170. Repairs and Fabrications.
5-172. Emergency Repair Inspection Procedures
5-173. Application of Seam Tape.
5-174. Sm. Rips, Tears, Pinholes, Porous Material.
5-175. Large Rips and Tears.
5-176. Large Holes.
5-177. Large Porous Areas.
5-178. Replacing Original Construction Seam Tape.
5-179. Repairing Loose Seam Tape.
5-180. Reattaching Slide Fasteners (entry/relief).
5-181. Replacement of Slide Fastener (entry/relief).
5-182. Replacement of Wrist Seal.
5-183. Repair of Wrist Seal Fabric Panel.
5-184. Repair of Neoprene Gasket on Wrist Seal.
5-185. Replacement of Neck Seal.
5-186. Repair of Neck Seal Fabric Panel.
5-187. Repair of Neck Seal Fabric Panel.
5-188. Repair of Anti-Exposure Socks.
5-189. Replacement of Anti-Exposure Socks.

5-166. I-LEVEL 360-DAY INSPECTION. The 360-Day Inspection is performed jointly by O-Level and I-Level. O-Level shall perform all the steps of the 180-Day inspection in accordance with paragraph 5-155 and forward the coveralls to I-Level for the leakage test.

NOTE

The 360-Day shall be performed as part of the place-in-service inspection and every 360 days thereafter unless the coverall has been placed in long term storage in accordance with paragraph 5-132.

5-167. I-LEVEL AIR AND WATER LEAK TEST SUMMARIZATION AND SCREENING PROCEDURES. Procedures for the leakage test have been modified for the CWU-86/P and CWU-87/P coveralls. Previously, the Water Test Device was used exclusively for testing and locating leaks in the coveralls. In order to make testing and repair easier and to provide leakage testing at sea, the procedure is now to use the Air Leak Test Fixture (see paragraph 5-168) to test for leaks first and possibly bypassing the water leak test altogether. The following are general guidelines to follow when screening for leaks. Keep in mind that the object here is to test for, isolate and repair leaks. Facilities without an air test fixture should contact their TYCOM to obtain one.

1. All coveralls should be leak tested with the air test fixture first in accordance with paragraph 5-168. If the coveralls pass the air leak test, then the coveralls are RFI and there is no need for further leak testing.

a. Shore Based Leak Test Screening:

(3) If coveralls fail the air leak test, and the location of the leaks cannot be immediately determined by feeling for escaping air or by detecting bubbles with the use of a soapy solution then the location of the leak or leaks shall be isolated with the Water Test Device in accordance with paragraph 5-169.

(4) Once repairs have been completed the repairs shall be verified with either the Air Leak Test Fixture or the Water Test Device. Continue leakage isolation and repair process until coveralls pass either the air or water leakage test and are deemed RFI.

b. Deployed Units Leak Test Screening:

(5) If coveralls fail the air leak testing an attempt shall be made to identify the location of the leak or leaks by feeling for escaping air or detecting bubbles by using a soapy solution to isolate the leaks. If location of leaks can be determined, the coveralls shall be repaired and the repairs verified with the Air Leak Test Fixture. Continue this process until either the coverall passes the Air Leak Test and can be returned as RFI or it is determined that the locations of the leaks cannot be located without use of the Water Test Device.

(6) Coveralls that fail the Air Leak Test and cannot be repaired shall be forwarded to a shore-based I-Level for testing of the location of the leak(s) by the Water Test Device.

5-168. I-LEVEL AIR LEAK TEST PROCEDURES. To perform the air leak test proceed as follows:

Materials Required

Quantity	Description	Reference Number
1	Lubricant Stick zipperease	00-000-7548 or equivalent
1	Wrench, 5/16 inch	commercially available
1	Bottle, Applicator, screw cap with dispensing spout, plastic, 28 oz capacity	8125-00-488-7952 or equivalent
As Required	Clamps, wrist seal and/or neck seal	Supplied with water test device
As Required	Dishwashing Liquid	7930-LH-000-1971 or commercially available
1	Leak Test Fixture (Procured through TYCOM)	1936AS100-1

1. Prepare soapy solution by mixing 1/2-ounce dishwashing liquid to 16 oz of water in spray bottle. Shake contents until foam appears in spray bottle. A large sponge dipped into a basin of soapy water (1/2 oz to one gallon of water) can also be used as a method of finding leaks.

2. Lubricate main body and convenience slide fasteners with zipper ease. Turn coverall inside out. Close all slide fasteners and ensure sliders are tight against top stops. Close chest fastener tight against top stop by reaching through the neck seal.

3. Loosen the locking nut of the test fixture assembly so that the upper plate can be raised approximately 3 inches above the lower plate.

4. Place the test fixture inside the coverall at the center of the neck seal opening, so the lower plate rests on the inside back of coverall.

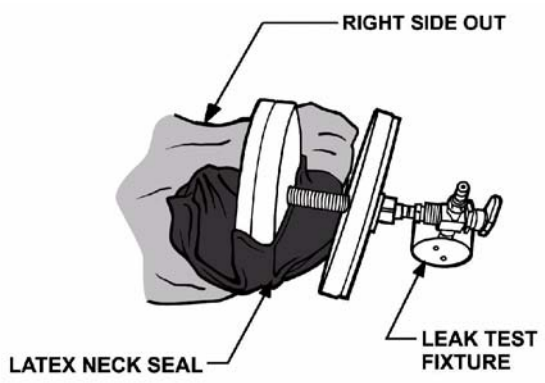

Step 4 - Para 5-168

5. Sandwich the latex neck seal between the upper and lower plates. Avoid creasing or pleating the latex.

6. Tighten the locking nut finger-tight to compress the neck seal flat between the upper and lower plates. Tighten with a wrench 1/2 turn more.

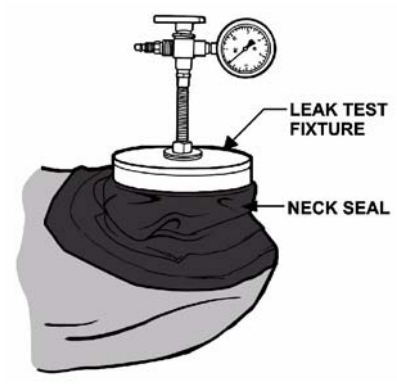

Step 6 - Para 5-168

7. Fold wrist seals twice, and clamp with wrist seal clamps.

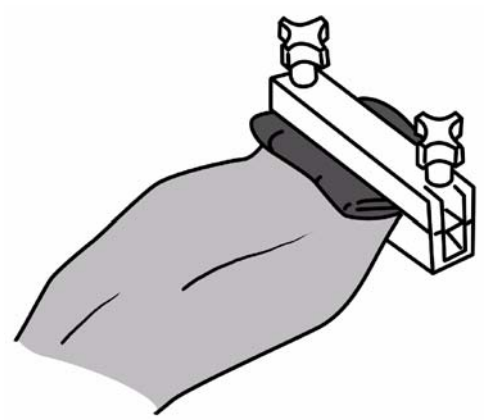

Step 7 - Para 5-168

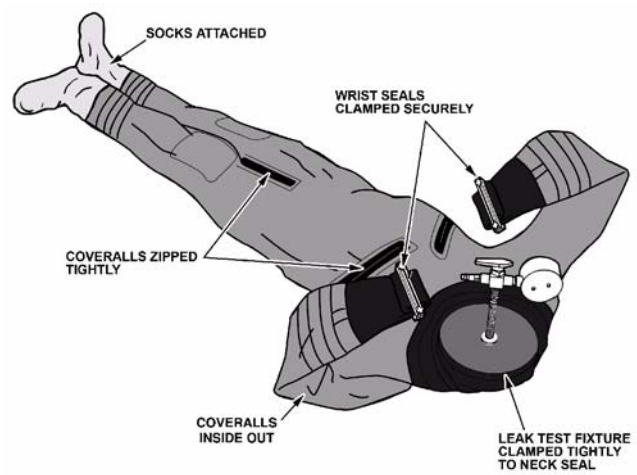

Step 7a - Para 5-168

CAUTION

Ensure pointer on 3-way valve is pointing toward gage when connecting air source.

NOTE

It is recommended that the coverall be filled and deflated three times to allow the air temperature inside the coverall to stabilize. The air temperature will be cold coming out of the compressor and will give a false negative reading (a pressure loss) until it comes to room temperature.

8. Connect a dry, filtered, clean low-pressure air source to the test fixture at the male quick disconnect fitting. Slowly rotate the black pointer on the 3-way valve toward the air inlet and slowly inflate the coveralls to 7.5 inches of water. If you go beyond the 7.5 inches of water pressure rotate the black pointer to the bleed hole in the 3-way valve to bleed excessive pressure down to 7.5 inches of water. Leave pointer facing gage and observe gage for pressure drop. If gage pressure has dropped, ensure the nut on the top plate is secure and not leaking and the wrist seal clamps are secure and not leaking. If pressure continues to drop, apply soapy solution around the outer edge of the upper plate assembly and the latex neck seal. If bubbles form, indicating that a leak is present, deflate coverall and repeat steps 5 through 8. If all clamps are secure and not leaking but the coverall cannot be stabilized at 7.5 inches of water then there is probably a catastrophic leak in the coveralls; the leak needs to be identified and repaired before proceeding with the air test; proceed to step 10. If water pressure is stabilized; proceed to step 9.

9. When confident that a good seal between test fixture and suit is made, and that pressure has been stabilized at 7.5 inches of water pressure, turn off airflow to the coverall by turning the black pointer on 3-way valve towards gage. Leave coverall at pressure for 5 minutes. If pressure drop is less than 1 inch of water pressure after the 5 minute test period the suit is RFI; continue to step 17. If pressure drop is greater than 1 inch of water continue to step 10.

10. If pressure reading drops more than 1 inch of water pressure during the 5 minute test period, visually inspect the coverall for the damaged area. Should the damaged area not be detected, re-inflate the coverall with a continuous airflow pressure of 7.5 inches of water pressure.

NOTE

When step 10 states that if pressure drop is indicated set coverall aside for isolation of leaks by water test it is not implying that obvious and easily detected leaks found during the air leak test cannot first be repaired in accordance with the appropriate repair sections and the coverall air tested again. Step 10 is simply attempting to avoid wasting valuable time and effort trying to locate a pin sized leak with the soapy solution.

11. Using the palm of your hand, cover the complete surface of the suit until the damaged area is detected. Mark damaged area and deflate the suit and repair in accordance with Paragraph 5-170.

12. If no damage can be detected in Steps 10 or 11 then using a sponge cover the suit with a soapy water starting at the neck working your way down to the feet ensuring that the front of the suit is completely covered. Note do not leave suit inflated and covered in soap solution for longer than 5 minutes.

13. Check complete front of suit for any leaks using your waterproof pen, mark any leaks found on the suit (leaks will show as continuous bubbling forming on the suit surface).

14. Once all leaks are recorded, dry the suit using a towel.

15. Turn suit over and repeat test process on the back of the suit.

16. On completion of the test check that all leaks are clearly marked on the suit.

17. Switch off compressor, disconnect air source. rotate pointer toward air inlet and loosen nut to dump pressure. remove air line, wrist clamps and faceplate assembly.

18. Rotate pointer arrow toward gage to return gage reading to zero.

19. If coveralls fail the air leak test and the location of the leaks cannot be immediately determined by feeling for escaping air or by detecting bubbles with the use of a soapy solution then the location of the leak or leaks shall be isolated with the water test device in accordance with Paragraph 5-169.

20. Allow suit to dry.

21. Repair if required in accordance with Paragraph 5-170.

22. Any suit repaired for leakage must be retested in accordance with Steps 1 through 24.

23. Verify repairs.

24. Document inspection in accordance with COMNAVAIRFORINST 4790.2.

5-169. I-LEVEL WATER LEAK TEST PROCEDURES. The water test is a two person operation. To perform the water test, proceed as follows:

Materials Required

Quantity	Description	Reference Number
As Required	Bleach, Laundry (Powder or Liquid)	A-A-1427 6810-00-598-7316
As Required	Chalk	7510-00-170-9315 or equivalent/ commercial
	or	
As Required	Pencil, Wax (China Marking)	7510-00-264-4612 or 7510-00-223-6676
As Required	Clamps, wrist seal and/or neck seal	Supplied with water test device
As Required	Rag, Wiping	A-A-2522 00-205-1711
As Required	Water Test Device	MIL-W-85635

WARNING

Prior to conducting water test, the Aircrew Survival Equipment must be familiar with the water test device operating procedures in NAVAIR 17-15GB-504.

NOTE

Water testing criteria for the CWU-86/P and CWU-87/P coveralls assembly shall be: If one drop of water falls from the underside of the coveralls in 10 seconds or less, the coverall shall be repaired.

NOTE

An alternate neck/wrist seal clamp may be fabricated locally in accordance with paragraph 5-457.

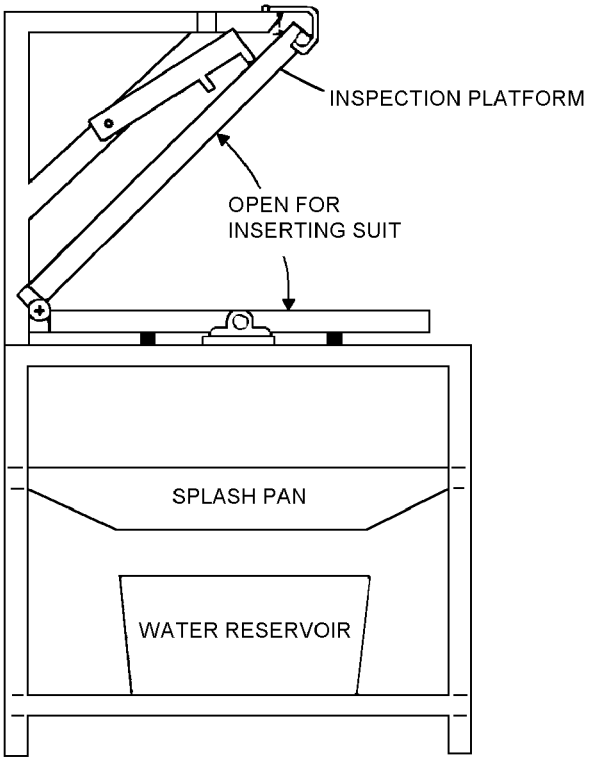

Figure 5-41. Water Test Device (end view)

1. Ensure Water Test Device (Figure 5-36) is ready for operation by checking the following:

a. Fill water reservoir to fill line with (approximately 30 to 35 gallons) clean, fresh water.

CAUTION

Use 1/4 cup of bleach for each water reservoir full of water. Reservoir shall be drained and water replaced at least monthly or more often if water becomes dirty, slimy, or stagnant.

b. Mix one cup of bleach with water at initial filling and at each subsequent refilling of reservoir.

c. Ensure hose is connected to pump.

d. Ensure electrical cord is connected to a three-prong grounded outlet, 115V, 60-Hz power source.

NOTE

Water Test Device is equipped with a ground fault interrupter that will turn electrical power off in the event that electrical circuit is not properly grounded.

2. Lock inspection platform in horizontal position with upper plate open as shown in Figure 5-37.

CAUTION

Prior to handling coverall, remove watches, rings, and any other sharp objects. Care should be taken while placing into inspection platform so that nothing catches the coveralls that might cause punctures or tears to the material. Also, ensure coveralls do not get pinched when platform is closed.

3. Turn coveralls to be inspected inside out and fully close slide fasteners. Lay coveralls on bottom half of inspection platform, positioning neck opening to left and entrance slide fastener facing up.

4. Close off wrist seal (wrist seal closest to platform hinge) and neck opening with clamps provided. Openings should be folded prior to clamping to avoid leakage.

CAUTION

Ensure that there are no twists or folds and garment is not pinched in hinges or latches of device.

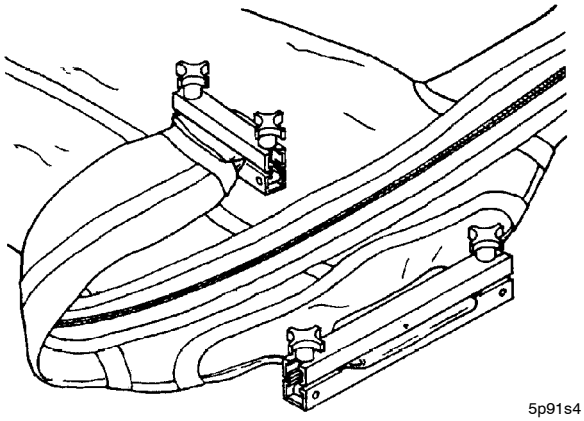

Step 4 - Para 5-169

5. Strips of 2-inch pile tape shall be routed through bottom section of inspection platform and loosely around socks above ankle area prior to filling coverall with water to minimize stretching of socks. Secure in place with hook tape.

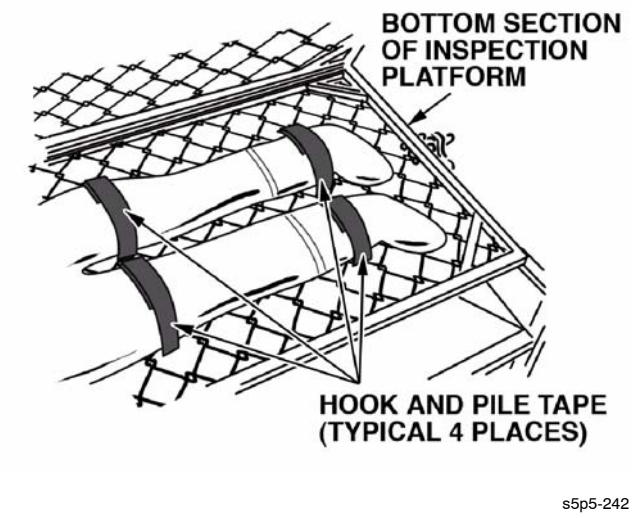

Step 5 - Para 5-169

6. Strips of 2-inch pile tape shall be routed through bottom section of inspection platform and loosely around each thigh, just below crotch, to help separate legs to facilitate visual inspection. Secure in place with hook tape.

7. Extend remaining (right) sleeve of coverall through slot provided in side of inspection platform and close top gate. Secure all four latches.

WARNING

Coveralls must be filled with water as described below. Do not attempt to shortcut filling procedures or overfilling, spillage, and seam rupture could occur.

NOTE

Ensure bottom portion of remaining clamp with knobs is in hanger provided in top of fixture prior to filling coveralls with water. Place top portion of clamp within easy reach of operator. Water test shall be performed in one complete cycle, start to finish, without interruption.

8. Route water hose over the platform hook and place water hose into sleeve opening. Grasp water hose and wrist seal/sleeve firmly making sure to leave an opening in the sleeve to allow air inside the coverall to escape while filling the coverall with water. While holding hose and arm, turn pump on by depressing footswitch and fill coverall until water reaches to the shoulder of the coverall sleeve.

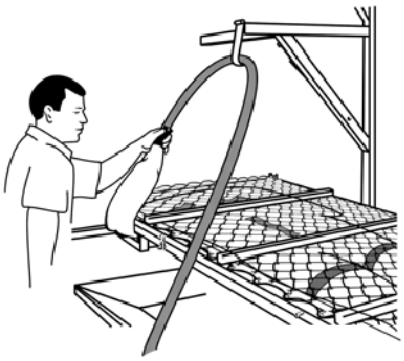

Step 8 - Para 5-169

NOTE

If water does not flow from hose within 5 seconds after operating foot switch, prime pump by switching on and off several times.

9. Remove hose from the sleeve while firmly closing the sleeve opening.

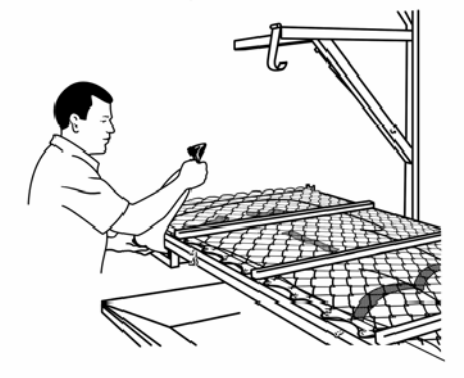

Step 9 - Para 5-169

10. While holding the sleeve opening firmly closed slowly rotate the platform 90.. upward from the horizontal position to the vertical position, lock in place with the platform arm hook.

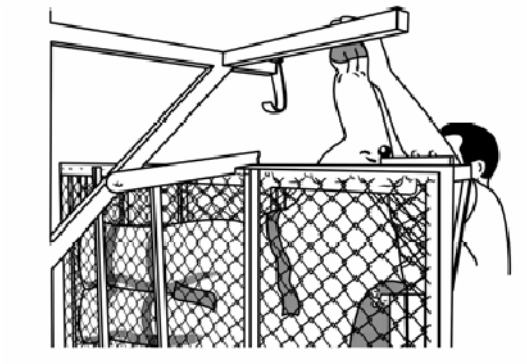

Step 10 - Para 5-169

11. Hold the sleeve up as straight up as possible and continue to fill the coverall until the water reaches to within 6 inches of the sleeve opening. Again, keep an opening in the sleeve as the coverall is filling to allow air to escape from the coverall.

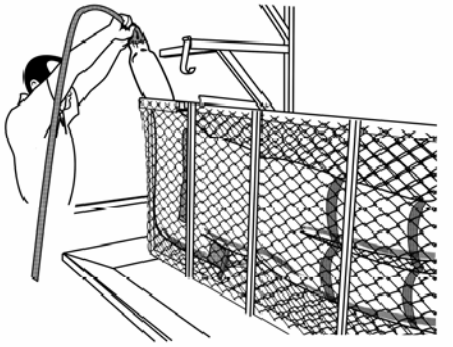

Step 11 - Para 5-169

12. Remove hose and clamp off sleeve opening with the sleeve clamp.

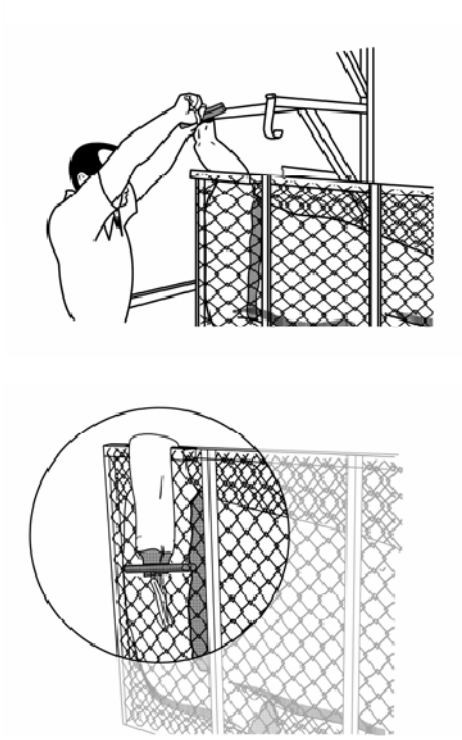

Step 12 - Para 5-169

13. Rotate the inspection platform back to the horizontal (front facing upwards) and lock in place. The coverall should be firm to the touch, (step 13) like a well-inflated helium balloon, not gelatinous or wobbly like an under inflated helium balloon, (step 13a).

Step 13 - Para 5-169

Step 13a - Para 5-169

NOTE

Because of all the different sizes and modifications authorized on the coveralls it is impractical to try to give accurate measurements for the amount of water that each coverall should hold in order to be tested. The concept is to get enough water in to the coverall to have the water pressing hard enough against the fabric and seams to uncover any flaws in the material that would cause the coverall to fail its function; that of keeping an aircrewmember alive until rescue personnel can locate them.

14. While the inspection platform is in the horizontal position (front of coverall facing upwards), inspect back of the coverall (underside) for leaks, including areas under the thigh and ankle securing fastener tapes by temporarily loosening the hook and pile closures. Where water appears on coverall surface, blot area dry with an absorbent material (paper towel, etc.). If water appears and drips within 10 seconds, mark suspect area for patching using only china marking pencil or tailor's chalk.

NOTE

All four sides of the coverall will be inspected in steps 14 through 17. Always push the platform up and away from you, 90° at a time so that each of the four steps completes the entire coverall.

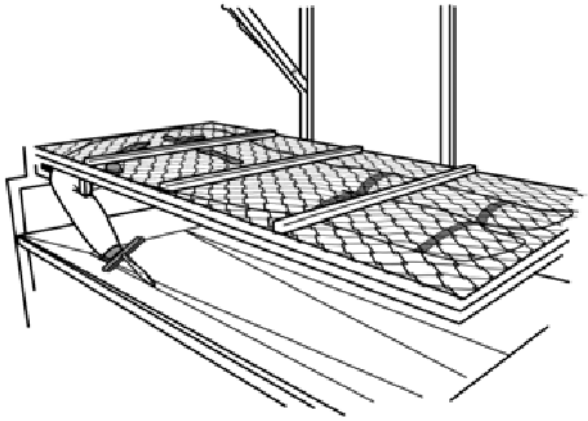

Step 14 - Para 5-169

15. Rotate the platform 90° to the vertical position; lock in place with the platform arm hook. Inspect the portion of the coverall closest to the splash pan. Where water appears on coverall surface, blot area dry with an absorbent material (paper towel, etc.). If water appears and drips within 10 seconds, mark suspect area for patching using only china marking pencil or tailor's chalk.

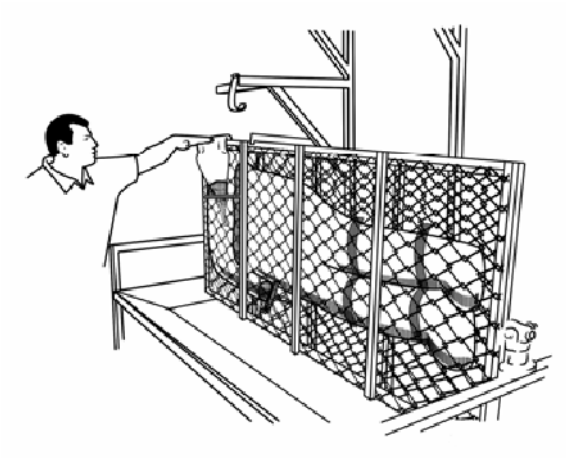

Step 15 - Para 5-169

16. Rotate the platform 90° to the horizontal position again so that the front of the suit is at the bottom closest to the splash pan. Inspect the front of the coverall and slide fastener box stitching near seal block for any water leakage. If water appears and drips within 10 seconds, mark suspect area for patching using only china marking pencil or tailor's chalk.

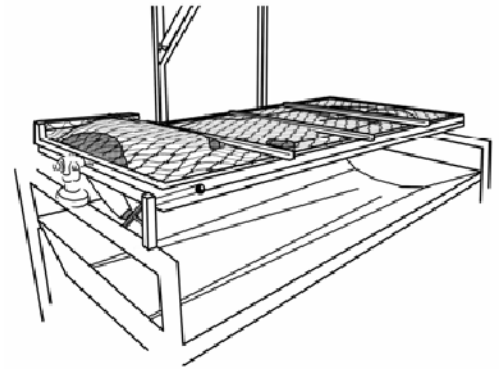

Step 16 - Para 5-169

17. Rotate the platform 90° to the vertical and lock in place with the platform arm hook so that the sleeve with the arm clamp is resting in the bottom of the splash pan. Inspect the final portion of the coverall closest to the splash pan. Where water appears on coverall surface, blot area dry with an absorbent material (paper towel, etc.). If water appears and drips within 10 seconds, mark suspect area for patching using only china marking pencil or tailor's chalk.

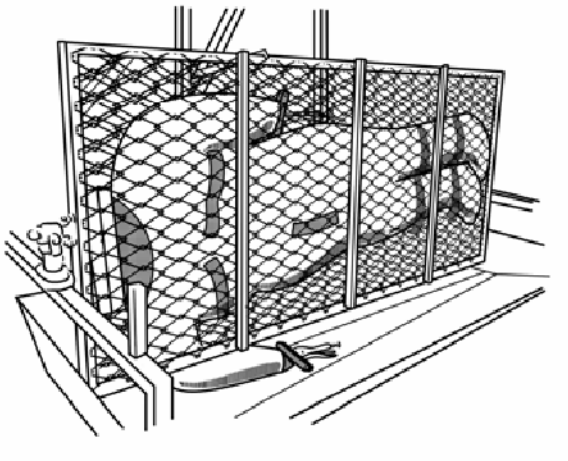

Step 17 - Para 5-169

18. To drain the water from the coverall, release the platform arm hook and rotate the platform up and past the horizontal position (this will get as much pressure off the sleeve opening as possible). While holding the platform in position with one hand grasp the sleeve opening firmly closed with the other and have an assistant slowly release the arm clamp. Slowly allow the sleeve to open and water to drain out in to the splash pan.

NOTE

When the clamp is first released water will gush out of the coveralls and all over the floor unless the sleeve opening is held firmly closed when the clamp is released and opened gradually allowing only a small amount of water to escape at a time. Assistance may be required to hold the platform in place, release the clamp and hold the sleeve closed all at the same time.

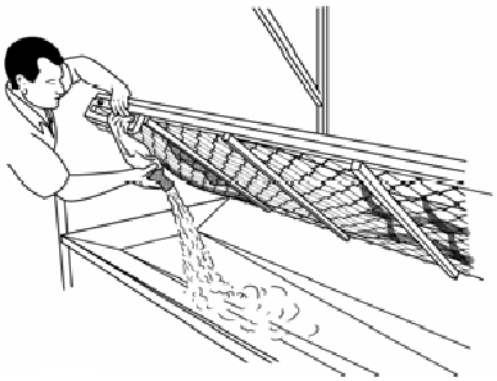

Step 18 - Para 5-169

19. Slowly rotate the platform downwards as the water continues to drain from the coverall.

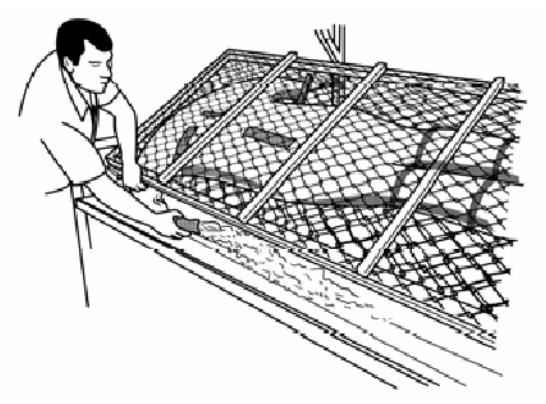

Step 19 - Para 5-169

20. Lock the platform in the vertical position and let the coverall drain as completely as possible.

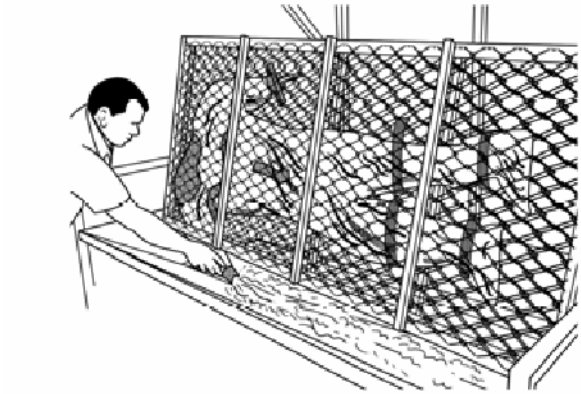

Step 20 - Para 5-169

21. Rotate the platform back to the original horizontal position and lock in place.

22. Open inspection platform, remove hook and pile tape used to secure thighs and ankles, remove clamps, and drain any remaining water.

23. Open entrance slide fastener and turn coverall right side out.

NOTE

When patching of the coverall is required, drying of the defective area of the CWU-86P and CWU-87P can be accomplished by subjecting the area to low-pressure air or by a five second application of the MIL-S-85634 seam and patch heat sealing machine. When drying the full garment in clothes dryer, place the garment in a locally fabricated mesh bag to minimize possible abrasion. An appropriate mesh material can be purchased from: Sterling Net and Twine Co., Inc., 18 Label Street, Montclair, NJ 04042. Phone (201) 783-9800.

24. With slide fasteners open, dry coverall in a clothes dryer set at its lowest temperature setting for 20 minutes, or hang coverall on wooden or plastic hanger and allow to air dry. After hanging for a maximum of 4 hours, check coverall for dryness. If water has collected inside anti-exposure socks, pull socks out through entrance opening and allow to dry.

NOTE

Refer to Chapter 3 for authorized cleaning procedures for the HGU-32/P hood and HAU-12/P mittens.

25. Verify inspection and/or repair and/or fit.

26. Document in accordance with COMNAVAIRFORINST 4790.2.

5-170. I-LEVEL REPAIR AND FABRICATION PROCEDURES.

5-171. Instructions for performing repairs or replacement of components of the Flyers Ruggidized Anti-Exposure Coverall assemblies in Ready For Issue (RFI) condition can be found in the following paragraphs. Repairs and fabrications of the coveralls shall include, but are not limited to, those listed in Table 5-7. All repairs to anti-exposure coveralls shall be followed by an air or leak test. Deployed activities who have an emergency situation where mission readiness would be impacted by not being able to repair and RFI an individuals anti-exposure coverall as per this manual can perform the required repairs in accordance with applicable paragraphs, inspect repaired coveralls in accordance with paragraph 5-172 and conditionally RFI the coveralls. The authorization of these emergency procedures is not intended to act as a catch all loop hole; they are to be used solely for emergencies that impact mission readiness. All coveralls conditionally RFI'd in the above manner shall be leak tested immediately when facilities are available to perform the

leakage test. CWU-79/P Neck and Wrist Seal pinholes can be repaired using Aqua Seal following manufacturer's instructions.

CAUTION

Do not apply adhesive to coverall fabric except where specified.

NOTE

Refer to Chapter 3 for authorized repairs of HGU-32/P Hood, HAU-12/P Mittens, MCP under garments and the CWU-43/P and CWU-44/P under garments.

All stitching shall be in accordance with ASTM-D-6193, Type 301 lockstitch 7 to 10 stitches per inch. Backstitch all ends not less than 3/4-inch.

5-172. EMERGENCY REPAIR INSPECTION PROCEDURES. (See paragraph 5-171 for guidance). After repair and/or patching coverall, perform visual inspection as follows:

WARNING

The following procedure is only to be used by deployed units when water testing is not available. Extreme attention to detail must be followed to prevent injury to personnel assigned the CWU-62 Series or CWU-79/P Anti-Exposure Coverall.

1. Sewing for loose/missing stitches.

2. Heat seal tape for loose ends and edges for separation of tape from coverall.

3. Slide fasteners for proper functioning.

4. All seams for loose tape, separation, cuts, and tears.

5. Neck and wrist seals for damage and proper bonding to the coverall.

6. Socks for proper attachment to coverall.

7. Assembly for cuts, tears, abrasions, and deterioration.

NOTE

Completion of inspection shall Conditionally RFI the coverall until returning to a shore based Intermediate Maintenance Level Activity.

8. Document maintenance actions in accordance with COMNAVAIRFORINST 4790.2.

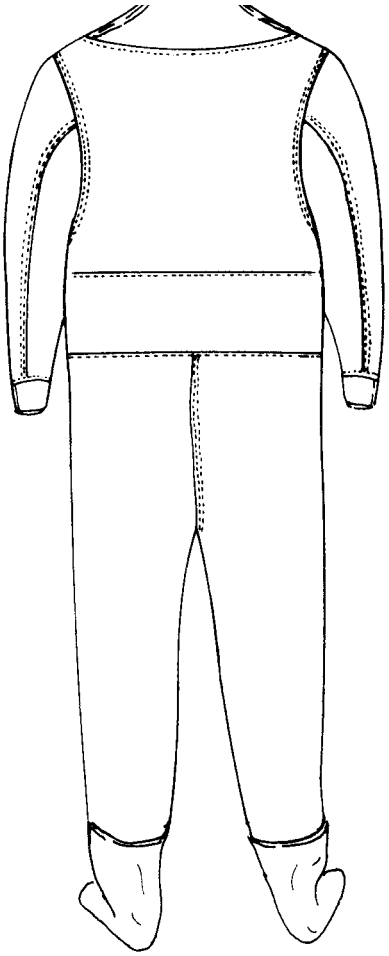

STEP 1

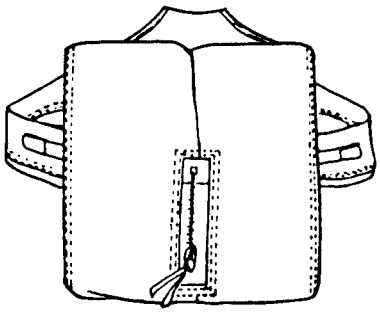

FOLD LEGS
SECOND TIME

STEP 3

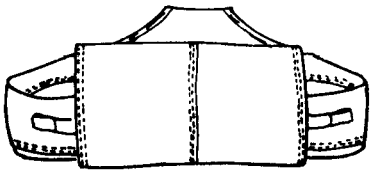

FOLD LEGS
AND BODY OF
COVERALL

STEP 4

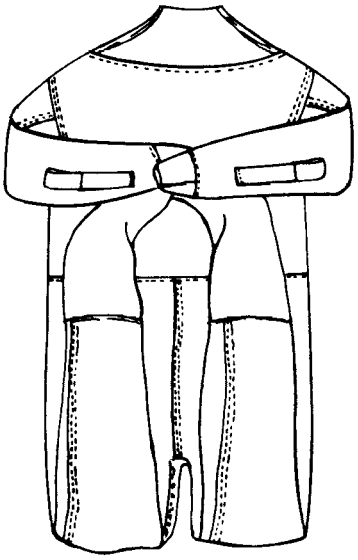

FOLD ARMS IN

FOLD LEGS
FIRST TIME

STEP 2

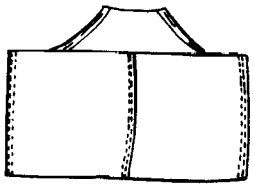

TUCK SLEEVES
BETWEEN FOLDS
2 AND 3 OF
COVERALL

STEP 5

5-15

Figure 5-42. Folding Procedures for the CWU-62/P Series Coveralls

Table 5-19. Repairs and Fabrications

Component	Discrepancy	Repair Authorized	Reference/Note
CWU-62/P Series or CWU-79/P Series or ARSD Series or MSD 560 Series or CWU-83/P or OTS-600	Patching and Reinforcement Limitations	Yes	Para 5-89 (Note 5/6)
	Porous fabric:		(Note 1)
	Small: Less than 1-inch diameter circle	Yes	Para 5-68 (Note 5)
	Large: Less than 7 inches by 7 inches	Yes	Para 5-71 (Note 6)
	Hole:		(Note 2)
	Small: Pinhole; less than 1/16-inch diameter	Yes	Para 5-68 (Note 5)
	Large: Less than 3-inch diameter	Yes	Para 5-70 (Note 6)
	Tear:		(Note 3)
	Small: Up to 1 inch long w/1/2-inch long cross cut.	Yes	Para 5-68 (Note 5)
	Large: Less than 7 inches in length with 1/2-inch long cross-wise cut(s)	Yes	Para 5-69 (Note 6)
	Rip:		(Note 4)
	Small: Up to 1 inch long.	Yes	Para 5-68 (Note 5)
	Large: Less than 10 inches in length	Yes	Para 5-69 (Note 6)
	Hole, Tear or Rip continuing through a seam	No	
	Replacement of slide fasteners	Yes	Para 5-65
	Repair of slide fastener	Yes	Para 5-64
	Repair of water seepage at box stitching	Yes	Para 5-66
	Thumb loop replacement	Yes	Para 5-67
	Loose Construction Seam Tape Replacement	Yes	Para 5-72
	Replacement of wrist seals (CWU-62/P Series)	Yes	Para 5-76
	Replacement of wrist seals (CWU-79/P Series)	Yes	Para 5-349
	Replacement of wrist seals (ARSD)	Yes	Section 5-5
	Replacement of neck seals (CWU-62/P Series)	Yes	Para 5-83
	Replacement of neck seals (CWU-79/P Series)	Yes	Para 5-348
	Replacement of neck seal (ARSD)	No	(Note 7)
	Replacement of Exhaust Valve (ARSD)	Yes	Section 5-5
	Replacement of loose or missing hook/pile tape (ARSD)	Yes	Section 5-5
	Replacement of loose or missing reflective tape (ARSD)	Yes	Section 5-5
	Replacement of Chest Pad (ARSD)	Yes	Section 5-5
Anti-Exposure Sock	Porous Fabric: Small ONLY	Yes	Para 5-68 (Note 5)
	Holes: Small (Pinholes) ONLY	Yes	Para 5-68 (Note 5)
	Tear: Small ONLY	Yes	Para 5-68 (Note 5)
	Hole, Tear or rip continuing through a seam	No	
	Repair/Replacement of loose seam tape	Yes	Para 5-73
	Replacement of sock	Yes	Para 5-74
CWU-23/P Liner	Tears, Rips, Holes	Yes	Para 3-198
	Slide Fastener	Yes	Para 3-198
	Replacement of sleeve insert	Yes	Para 3-199
CWU-72/P,	Tears, Rips, Holes	Yes	Para 3-220
	Slide Fastener	No	
	Replacement of hook and pile tape	Yes	Para 3-220

Table 5-19. Repairs and Fabrications (Cont)

Component	Discrepancy	Repair Authorized	Reference/Note
CWU-81/P, or CWU-82/P Liners	Tears, Rips, Holes	Yes	Para 3-241
	Slide Fastener	No	
	Replacement of hook and pile tape	Yes	Para 3-241

Notes:
1. Porous Area. Fabric that is visibly intact yet still leaks. Criteria shall be: If one (1) drop of water falls from the underside of the coveralls in 10 seconds or less the coverall shall be repaired.
2. Hole, round damage; an entire circular or elliptical shape missing from the fabric.
3. Tear; L or I shaped damage; that is a long continuous cut with a short connected perpendicular cut at one or both ends. Tears of 1/2 inch in length or greater in coverall fabric shall be closed with zigzag stitching prior to application of patches.
4. Rip, linear damage; that is, a long continuous cut with no other adjoining cuts. Rips larger than 1/2 inch.
5. Reinforcing: Repairing a small tear, small rip, small hole or small porous area by heat seal tape alone. See paragraphs 5-122 through 5-126 for definitions and limitations.
6. Patching: Repairing a tear, rip, or hole by sewing a new piece of fabric or heat seal tape along the perimeters of the damage, then taping those sewn edges. See paragraphs 5-122 through 5-126 for definitions and limitations.
7. Neck seal on ARSD must be replaced at either Mustang or Concord in accordance with Section 5-5.
8. Replacement of slide fasteners shall be accomplished at the discretion of the repairing activity.
9. Dimensions and limitations for patching and reinforcing liners is not the same as for the coveralls.

5-173. I-LEVEL PROCEDURES FOR APPLICATION OF SEAM TAPE. To apply seam tape to various coverall components, e.g. wrist/neck seals, anti-exposure socks, coverall extensions/shortenings, and various repairs, e.g. large rips and tears, large porous areas, proceed as follows:

Materials Required

Quantity	Description	Reference Number
As Required	Chalk	7510-00-170-9315 or equivalent/ commercial
	or	
As Required	Pencil, Wax (China Marking)	7510-00-264-4612 or 7510-00-223-6676
As Required	Cloth, Special	MIL-C-85637, 8475-01-196-0076
As Required	Patch, 2-inch Diameter	01-192-2489
1	Roller, Hand 2 inch wide	GGG-R-00620 5120-00-243-9401
1	Sealer, Heat Seam and Patch	MIL-S-85634
As Required	Spatula, Dental	No. 324 6520-00-556-8000 or equivalent
As Required	Tape, Seam 1-inch	TBD
As Required	Torque Wrench	0- to 100 lbs-inch

WARNING

Prior to application of seam tape, Aircrew Survival Equipment must be familiar with heat-sealing machine operating procedures in NAVAIR 17-10DC-1.

NOTE

Tape or patch must extend 1-inch beyond damaged area. Tape or patches may be overlapped to meet the 1-inch requirement. Do not confuse “overlapping” with what is called “overpatching”, which is attempting to repair damage by placing a new patch over an existing patch (basically; patching a patch). Overpatching is not authorized, overlapping patches is authorized.

1. Turn heat-sealing machine (see Figure 5-38) ON and wait 10 minutes for visual thermometer to stabilize at 350 degrees F. If temperature is incorrect, adjust temperature control knob.

CAUTION

Temperature is critical; do not overheat.

NOTE

Normal use requires periodic torque pressure adjustment of bolt to 75 ±2 lb-in.

2. Center area to be repaired on anvil pad, ensuring only one layer of fabric is on anvil and there are no wrinkles in fabric.

NOTE

Do not allow any fabric yarns or sewing thread to protrude from under seam tape.

3. Apply one layer of 1 or 1 1/2-inch seam tape to inside seam, keeping seam line and cut edges as nearly centered under tape as possible. Tape shall extend at least 1/4 inch beyond stitching. Apply heat to sections of tape for 20 seconds. Overlap ends of seam tape 1-inch, trimming the overlapping tape end to a round shape.

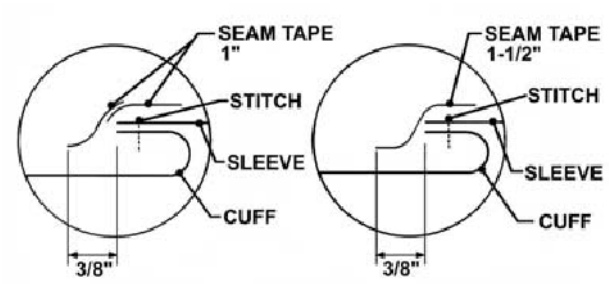

Step 3 - Para 5-173

4. After the heat platen is lifted from the surface, press the tape surface with the hand roller to eliminate air pockets under the heat seal tape and to spread adhesive evenly.

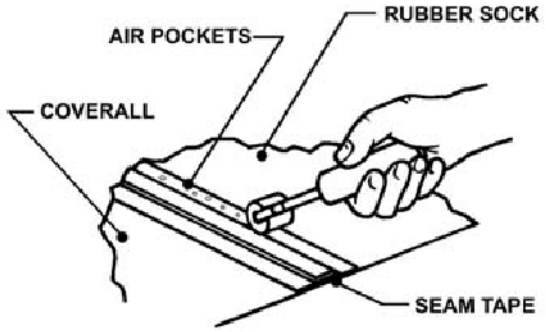

Step 4 - Para 5-173

5. Verify all repairs with either the air leak or water leak test. If no leaks are found coverall shall be returned RFI.

6. Document in accordance with COMNAVAIRFORINST 4790.2.

5-174. I-LEVEL PROCEDURES FOR REPAIRING/REINFORCING SMALL TEARS, SMALL RIPS, SMALL POROUS AREAS AND PINHOLES BY APPLYING HEAT CIRCLES OR SEAM TAPE. To apply 2-inch diameter patches or seam tape reinforcement, proceed as follows using the repairable dimensions below:

Materials Required

Quantity	Description	Reference Number
As Required	Chalk	7510-00-170-9315 or equivalent/ commercial
	or	
As Required	Pencil, Wax (China Marking)	7510-00-264-4612 or 7510-00-223-6676
As Required	Cloth, Special	MIL-C-85637, 8475-01-196-0076
As Required	Patch, 2-inch Diameter	01-192-2489
1	Roller, Hand 2 inch wide	GGG-R-00620 5120-00-243-9401
1	Sealer, Heat Seam and Patch	MIL-S-85634
As Required	Spatula, Dental	No. 324 6520-00-556-8000 or equivalent

Materials Required (Cont.)

Quantity	Description	Reference Number
As Required	Tape, Seam 1-inch	TBD
As Required	Torque Wrench	0- to 100 lbs-inch

WARNING

Prior to application of seam tape, Aircrew Survival Equipmentmen must be familiar with heat-sealing machine operating procedures in NAVAIR 17-10DC-1.

CAUTION

Do not close any tears in antiexposure socks with machine stitching. Use 2-inch diameter circles or seam tape patches only. See paragraph 5-150 for repair of anti-exposure socks.

NOTE

All tape or circles shall extend a minimum of 1/2 inch beyond damaged areas. Tape may be overlapped to achieve 1/2-inch margin.

1. Turn heat-sealing machine (see Figure 5-38) ON and wait 10 minutes for visual thermometer to stabilize at 350 degrees F. If temperature is incorrect, adjust temperature control knob.

CAUTION

Temperature is critical; do not overheat.

2. Center area to be repaired on anvil pad, ensuring only one layer of fabric is on anvil and there are no wrinkles in fabric.

NOTE

Normal use requires periodic torque pressure adjustment of bolt to 75 ±2 lb-in.

3. Center patch, film-side down, on fabric of the coveralls.

4. Bring heat platen down, locking it in place.

5. Set timer for 20 seconds. When timer bell sounds, raise heat platen.

6. Smooth out wrinkles and air pockets with hand roller to prevent water leakage.

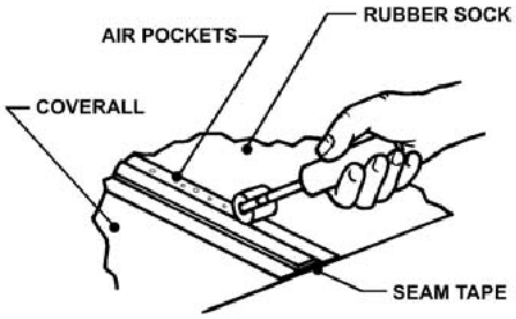

Step 6 - Para 5-174

7. Verify all repairs with either the air leak or water leak test. If no leaks are found coverall shall be returned RFI.

8. Document in accordance with COMNAVAIRFORINST 4790.2.

5-175. I-LEVEL PROCEDURES FOR REPAIRING/PATCHING LARGE RIPS OR TEARS.

Materials Required

Quantity	Description	Reference Number
As Required	Chalk	7510-00-170-9315 or equivalent/ commercial
	or	
As Required	Pencil, Wax (China Marking)	7510-00-264-4612 or 7510-00-223-6676
As Required	Cloth, Special	MIL-C-85637, 8475-01-196-0076

Materials Required (Cont.)

Quantity	Description	Reference Number
	Tape, Seam 14-inch (patches)	TBD
As Required	Thread, Nylon, Aramid, High Temperature Resistant, Aromatic Spun Staple, GREEN	MIL-T-83193 8310-00-405-2252

CAUTION

High temperature resistant thread shall be used unless not available in supply. High temperature resistant thread does not propagate flame; nylon thread does.

NOTE

Straight stitching shall be Type 301 lockstitch, 5 to 7 stitches per inch with minimum backstitch or over-stitch of 1 inch. Stitching shall be 1/8 inch from raw edges.

NOTE

Ensure area of coveralls to be patched has been thoroughly dried prior to patching. Round off corners of seam tape prior to application.

1. Lay coverall on flat surface, with the inside of the damaged (white or gray) area facing up. Butt damaged fabric edges together. With a china marker, mark a rectangular border around damaged area, at least 3/4 inch from raw edges.

2. Measure the dimensions of the damage border and, with a china marker, draw a duplicate shape on a new piece of Special Cloth. Cut out the repair piece.

3. Place repair piece (green side down) on top of the damage area (white or gray side up). Sew repair rectangle to damage rectangle with 1 row of stitches 1/4-inch from rectangle edges.

4. Turn coverall right side out. Sew along raw damaged edges to the repair rectangle using 2 rows of stitches 1/16-inch apart, and keeping 1/8-inch from raw damaged edges.

NOTE

Tape or patch must extend 1-inch beyond damaged area. Tape or patches may be overlapped to meet the 1-inch requirement. Do not confuse ”overlapping” with what is called ”over-patching”, which is attempting to repair damage by placing a new patch over an existing patch (basically; patching a patch). Over-patching is not authorized, however, overlapping patches is authorized.

5. Turn suit inside out and apply 1 or 1 1/2-inch wide heat seal tape over all stitching per paragraph 5-174.

6. Verify all repairs with either the air leak or water leak test. If no leaks are found coverall shall be returned RFI.

7. Document in accordance with COMNAVAIRFORINST 4790.2.

5-176. I-LEVEL PROCEDURES FOR REPAIRING/PATCHING LARGE HOLES.

Materials Required

Quantity	Description	Reference Number
As Required	Chalk	7510-00-170-9315 or equivalent/ commercial
	or	
As Required	Pencil, Wax (China Marking)	7510-00-264-4612 or 7510-00-223-6676
As Required	Cloth, Special	MIL-C-85637, 8475-01-196-0076
As Required	Thread, Nylon, Aramid, High Temperature Resistant, Aromatic Spun Staple, GREEN	MIL-T-83193 8310-00-405-2252

NOTE

If hole is larger than 3-inch diameter, coverall has been exposed to atypical wear, and should be submitted for possible condemning.

1. Turn coverall inside out and lay it on a flat surface, with the inside of the damaged (white or gray) area facing up. With a china marker, mark a circular border around the hole, at least 3/4 inch from raw edges. Do not butt edges together.

2. Draw up to a 4-inch identical circle on a new piece of Special Cloth. Cut out the repair circle.

NOTE

(OPTIONAL) To make hemming easier, stitch 3/8-inch from unhemmed edge of circle, overlapping stitching and not backstitching. Remove from sewing machine, leaving 6-inch tails of thread. Pull gently on the bobbin thread. This will force the outer edge of the circle to fold in on itself along the stitch line. Tie off the bobbin thread when the desired fold edge has been achieved.

3. Hem the repair circle by turning under 3/8-inch and stitching 1/8-inch from folded edge.

4. Turn the coverall right side out. Center the repair circle over the damaged area, and make alignment marks at even quarters on both the repair circle and the coverall.

5. Sew the repair circle to the coverall using one row of stitches 1/16-inch from the hemmed edge, maintaining alignment.

6. Turn coverall inside out. Apply seam tape in accordance with paragraph 5-174, to inside, keeping stitch lines as nearly centered under tape as possible. Tape shall extend at least 1/4 inch beyond stitching and edge of slide fastener tape. Overlap ends of seam tape 1 inch.

7. Verify all repairs with either the air leak or water leak test. If no leaks are found coverall shall be returned RFI.

8. Document in accordance with COMNAVAIRFORINST 4790.2.

5-177. I-LEVEL PROCEDURES FOR REPAIRING/PATCHING LARGE POROUS AREAS.

Materials Required

Quantity	Description	Reference Number
As Required	Chalk	7510-00-170-9315 or equivalent/ commercial
	or	
As Required	Pencil, Wax (China Marking)	7510-00-264-4612 or 7510-00-223-6676
As Required	Cloth, Special	MIL-C-85637, 8475-01-196-0076
As Required	Tape, Seam 1-inch	TBD
As Required	Thread, Nylon, Aramid, High Temperature Resistant, Aromatic Spun Staple, GREEN	MIL-T-83193 8310-00-405-2252

1. Turn coverall inside out and lay it on a flat surface, with the inside of the porous (white or gray side) area facing up. With a china marker, mark a rectangular border around porous area.

2. Measure the dimensions of the porous border and, with a china marker, draw a duplicate shape on a new piece of Special Cloth. Cut out the repair piece.

3. Place repair rectangle (green side down) on top of the porous area (white or gray side up). Sew repair rectangle over porous rectangle with 1 row of stitches 1/4-inch from repair rectangle edges.

NOTE

Patches may not cover more than 25% area of a coverall panel. Patching an existing patch over a large porous area is not authorized. Coveralls requiring over-patching shall be considered Non Ready For Issue; BER.

4. Apply 1-inch seam tape to overlap both stitching and cut edges of repair rectangle on the inside of the coverall per paragraph 5-173.

5. Verify all repairs with either the air leak or water leak test. If no leaks are found coverall shall be returned RFI.

6. Document in accordance with COMNAVAIRFORINST 4790.2.

5-178. I-LEVEL REPLACEMENT OF ORIGINAL CONSTRUCTION SEAM TAPE. Repairs beyond 15 inches are not normally recommended. However, final determination of repair will be at the discretion of the workcenter. See paragraph 5-127 step for further guidance on the replacement of original construction seam tape.

Materials Required

Quantity	Description	Reference Number
1	Sealer, Heat Seam and Patch	MIL-S-85634
As Required	Spatula, Dental	No. 324 6520-00-556-8000 or equivalent
As Required	Tape, Seam 1-inch	TBD

WARNING

Prior to application of seam tape, Aircrew Survival Equipmentmen must be familiar with heat-sealing machine operating procedures in NAVAIR 17-10DC-1.

1. Using the heat sealer, heat the area and gently peel off the loose tape. Remove excess glue by scraping with a spatula or similar flat tool, without damaging the coverall fabric. Continue the process for the length of the loose tape.

2. Apply 1-inch seam tape in accordance with paragraph 5-173, to inside, keeping stitch lines as nearly centered under tape as possible. Tape shall extend at least 1/4 inch beyond stitching. Overlap ends of seam tape 1 inch.

3. Verify all repairs with either the air leak or water leak test. If no leaks are found coverall shall be returned RFI.

4. Document in accordance with COMNAVAIRFORINST 4790.2.

5-179. I-LEVEL REPAIR OF LOOSE SEAM TAPE ATTACHING COMPONENTS TO COVERALL. To repair loose seam tape attaching neck seals, wrist seals, or socks proceed as follows:

Materials Required

From listing: Not applicable

NOTE

Repairs are permissible only if the existing component item remains intact. If item is irreparably damaged, replace the item.

1. Trim loose seam tape from the point of separation.

2. Cut a new strip of seam tape and round the corners. Apply new strip of seam tape over the existing trimmed seam tape using the heat sealer in accordance with paragraph 5-173. Ensure that at least a 1-inch overlap exists between existing and new seam tape.

3. Verify all repairs with either the air leak or water leak test. If no leaks are found coverall shall be returned RFI.

4. Document in accordance with COMNAVAIRFORINST 4790.2.

5-180. I-LEVEL REATTACHING SLIDE FASTENER TO COVERALL. To repair any dried adhesive which may have separated from the inside rubber tape portion of the slide fastener, proceed as follows:

Materials Required

Quantity	Description	Reference Number
As Required	Adhesive, Polychloroprene Adhesive, Polyurethane	MIL-A-5540 UR1092
As Required	Brush, Acid, swabbing, disposable	7920-00-514-2417
As Required	Rag, Wiping	A-A-2522 00-205-1711
1	Sealer, Heat Seam and Patch	MIL-S-85634
As Required	Spatula, Dental	No. 324 6520-00-556-8000 or equivalent
As Required	Talc	8510-00-817-0295 or equivalent
As Required	Tape, Seam 1-inch	TBD
As Required	Toluene, Technical MEK	TT-T-548 6810-00-281-2002

WARNING

Prior to application of seam tape, Aircrew Survival Equipmentmen must be familiar with heat-sealing machine operating procedures in NAVAIR 17-10DC-1.

WARNING

Do not use toluene near open flame, heat or electrical sparks. Avoid prolong contact with skin or breathing of fumes. Only use in well-ventilated area.

NOTE

Repairs are required only if water leakage occurs.

1. Remove old seam tape with heat sealer.

2. With dental spatula or appropriate tool, clean adhesive off rubber.

3. Clean area to be repaired with toluene. Wipe with a soft rag. Let cleaned area dry for 20 minutes.

4. Brush one coat of adhesive on the loosened seam tape area and on the back portion of the cleaned area of the slide fastener.

NOTE

Ensure that adhesive is getting into the seam area between the dried adhesive and the slide fastener.

5. When tacky press surfaces together with a roller and allow 48 hours to dry.

6. Verify the repair with either the air leak test or the water leak test.

7. Seam leakage around slide fasteners can be corrected by applying two layers of adhesive over the heat seal tape and slide fastener rubber.

a. Mark a perimeter around the affected area such that once applied, the adhesive will extend out 2-inches in all directions from the point of leakage.

b. Apply first layer of adhesive in a right-to-left application, remaining within the perimeter established in step 7a.

c. Apply second layer of adhesive in an up-and-down application directly over the previous layer of adhesive. Let dry.

d. Apply a light coat of talc over the adhesive area when completely dry.

8. Verify all repairs with either the air leak or water leak test. If no leaks are found coverall shall be returned RFI.

9. Document in accordance with COMNAVAIRFORINST 4790.2.

5-181. I-LEVEL REPLACEMENT OF SLIDE FASTENER. To replace entrance or relief portal slide fastener, see Table 5-14 for sizes, then proceed as follows:

NOTE

Replacement of the Slide Fasteners will be at the discretion of the work center. If the CDI determines that the suit is old and approaching BER it may not be cost effective to replace the slide fastener. Other variables, such as supply system availability, funding, and overall condition of the suit should be taken into consideration when determining whether to replace the slide fastener or the suit.

Materials Required

Quantity	Description	Reference Number
As Required	Adhesive, Polychloroprene Adhesive, Polyurethane	MIL-A-5540 UR1092
As Required	Brush, Acid, swabbing, disposable	7920-00-514-2417
As Required	Chalk	7510-00-170-9315 or equivalent/ commercial
	or	
As Required	Pencil, Wax (China Marking)	7510-00-264-4612 or 7510-00-223-6676
As Required	Rag, Wiping	A-A-2522 00-205-1711
1	Sealer, Heat Seam and Patch	MIL-S-85634
1	Slide Fastener	See Table 5-14
As Required	Spatula, Dental	No. 324 6520-00-556-8000 or equivalent
As Required	Talc	8510-00-817-0295 or equivalent
As Required	Thread, Nylon, Aramid, High Temperature Resistant, Aromatic Spun Staple, GREEN	MIL-T-83193 8310-00-405-2252
As Required	Toluene, Technical MEK	TT-T-548 6810- 00-281-2002
As Required	Webbing, Nylon, 9/16” wide	MIL-W-4088, Type I

WARNING

Do not use toluene near open flame, heat or electrical sparks. Avoid prolong contact with skin or breathing of fumes. Use in well ventilated area.

1. Remove old seam tape surrounding the defective slide fastener by softening adhesive with heat sealer and peeling tape off.

2. Prior to removing defective slide fastener, make alignment marks on coveralls and slide fastener using a china marking pencil. Marks should be made at quarter, half, and three-quarter length sections on both sides of the slide fastener and both sides of the coverall opening.

3. To remove existing slide fastener from coverall, cut stitching being careful not to nick or damage fabric. Remove any remaining stitches or threads from the area around the slide fastener.

CAUTION

Use care when removing stitches and scraping off adhesive to avoid damaging the fabric.

4. Apply heat, using heat sealer, to soften remaining adhesive. Gently scrape off as much adhesive as possible using a dental spatula or equivalent.

5. Select correct size slide fastener from Table 5-14. Clean the tapes of the new slide fastener with toluene. Wipe with a soft rag. Let cleaned area dry for five minutes. Transfer alignment marks from the used slide fastener to the new one. Place new slide fastener in the opening left from the previous fastener, face out, making sure to match the alignment marks. Slide fastener may close from right to left or left to right, depending on aircrew preference.

6. Sew one row of stitches (5 to 7 stitches per inch) around opening, stitching through all layers (fabric and slide fastener tape) 1/16 inch from folded

edge of fabric, following the pattern left by previous stitching. Sew a second row of stitches 1/8 inch from first row of stitches.

7. On inside, apply two thin coats of adhesive to all four edges of slide fastener tape, covering and extending at least 3/8 inch beyond rows of stitching. Seam tape will not adhere properly to slide fastener tape without the use of adhesive. Allow 15 minutes between each coat. Allow a minimum of 48 hours drying time for adhesive before heat sealing. Let dry completely.

NOTE

When applying seam tape, ensure tape and coveralls material are not wrinkled or bunched before lowering heat platen. If using 1 1/2 inch seam tape, only one layer of seam tape shall be applied. If 1 inch tape is used, two overlapping layers of seam tape shall be applied.

8. Apply seam tape in accordance with paragraph 5-173, to inside, keeping stitch lines and edge of slide fastener tape as nearly centered under tape as possible. Tape shall extend at least 1/4 inch beyond stitching and edge of slide fastener tape. Overlap ends of seam tape 1 inch.

9. Ensure that a thong is looped through the slide fastener pull and securely tied using a larks head knot (see Glossary in rear of this manual). If thong is missing, fabricate the thong using 10 1/4 inches of 9/16-inch wide nylon webbing. The ends of the thong shall be cut on an angle of approximately 60 degrees. Sear ends of thong and allow no sharp edges to be formed.

10. Verify all repairs with either the air leak or water leak test. If no leaks are found coverall shall be returned RFI.

11. Document in accordance with COMNAVAIRFORINST 4790.2.

5-182. I-LEVEL REPLACEMENT OF WRIST SEAL. Replacement of wrist seal unit consists of removing the old wrist seal unit and installing a new wrist seal unit to the wrist seal attachment panel. To remove and replace unserviceable wrist seal unit proceed as follows:

Materials Required

Quantity	Description	Reference Number
1	Sealer, Heat Seam and Patch	MIL-S-85634
As Required	Spatula, Dental	No. 324 6520-00-556-8000 or equivalent
As Required	Thread, Nylon, Aramid, High Temperature Resistant, Aromatic Spun Staple, GREEN	MIL-T-83193 8310-00-405-2252
As Required	Toluene, Technical MEK	TT-T-548 6810- 00-281-2002
As Required	Torque Wrench	0- to 100 lbs-inch
2	Wrist Seal, Neoprene	3769AS120-1 NIIN TBD

1. Configuration of the Wrist Seal: Coverall Sleeve (section with glove pocket), wrist seal attachment panel, wrist seal unit and outer sleeve cover (section with flight suit) type fabric and fastener tape strap adjustment that covers the wrist seal and attachment panel.

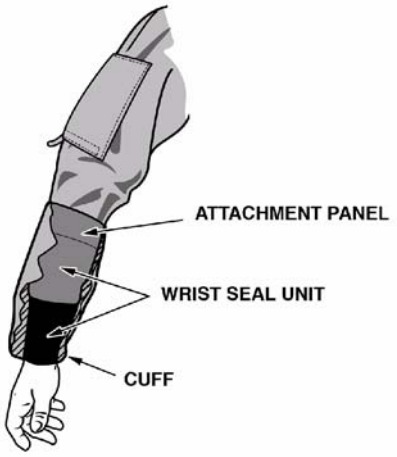

Step 1 - Para 5-182

WARNING

Do not use toluene near open flame, heat or electrical sparks. Avoid prolong contact with skin or breathing of fumes. Use in well ventilated area.

NOTE

Seam tape will be on the inside of coveralls when finished.

2. Remove old seam tape from coverall wrist seal unit and attachment panel by softening adhesive with heat sealer and peeling tape off.

3. Remove stitching by carefully cutting stitches with scissors or knife.

4. Use the old wrist seal unit as a guide to the correct length of the new wrist seal unit. Slide the new wrist seal unit inside the old wrist seal unit ensuring the neoprene/aramid fabric seams are aligned. Mark the new wrist seal unit along the raw edge circumference of the old wrist seal unit with a china marker.

5. Remove excess length of the new replacement wrist seal unit by cutting along the line marked in step 3. Discard old wrist seal unit and excess material from new wrist seal unit.

6. Fold outer sleeve cover cuff up and out of the way. Turn the wrist seal unit inside out and slide the new wrist seal unit over the sleeve (right sides together) and align the raw edges of the wrist seal unit and the sleeve attachment panel. Offset the seams of the wrist seal unit and the attachment panel. Sew inside-out wrist seal unit to the end of the right-side-out sleeve, (right sides together) using a 3/8 inch seam allowance, seam type LSq, 8 stitches per inch. Offset seams.

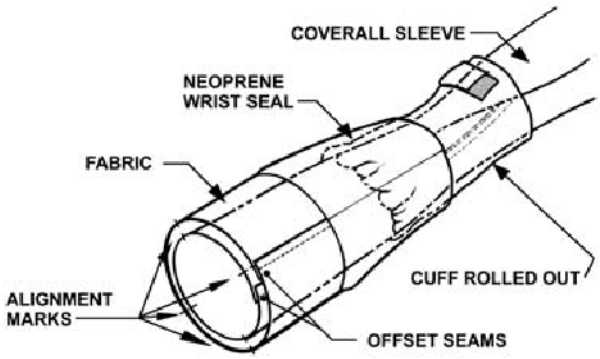

Step 6 - Para 5-182

7. Turn sleeve inside out. Trim off loose fabric yarns and sewing thread ends.

8. Apply one layer of 1 inch seam tape to inside seam in accordance with paragraph 5-173, keeping seam line and cut edges as nearly centered under tape as possible. Apply heat to sections of tape for 20 seconds. Overlap ends of seam tape 1 inch, trimming the overlapping tape end to a round shape to prevent peeling.

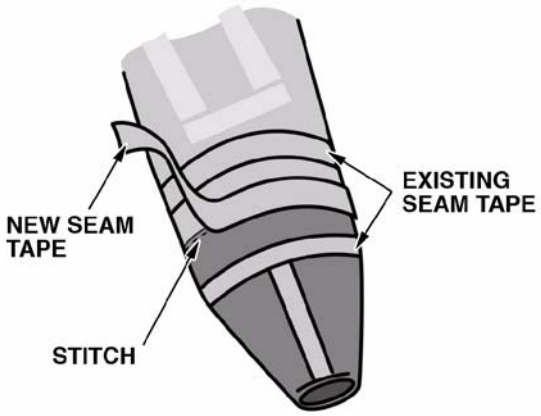

Step 8 - Para 5-182

9. Verify all repairs with either the air leak or water leak test. If no leaks are found coverall shall be returned RFI.

10. Document in accordance with COMNAVAIRFORINST 4790.2.

5-183. REPAIR OF WRIST SEAL FABRIC PANEL. To repair wrist seal fabric panel, patch in accordance with paragraph 5-174.

5-184. I-LEVEL REPAIR OF NICKS/GOUGE, SPLIT/CRACK OR PITS IN NEOPRENE GASKET OF WRIST SEAL UNIT.

Materials Required

Quantity	Description	Reference Number
As Required	Brush, Acid, swabbing, disposable	7920-00-514-2417
As Required	Neoprene Adhesive	3497AS108-1 or Aquaseal or Seam Grip
As Required	Toluene, Technical MEK	TT-T-548 6810-00-281-2002

1. Scrub nicked area by brushing surface and nicked edges with toluene. Let dry 20 minutes.

2. Apply neoprene adhesive to damaged edges, overlapping glue on shiny side 1/4-inch. Butt edges and apply hand pressure until bond forms. Allow 24 hour drying time.

3. Verify all repairs with either the air leak or water leak test. If no leaks are found coverall shall be returned RFI.

4. Document in accordance with COMNAVAIRFORINST 4790.2.

5-185. I-LEVEL REMOVAL AND REPLACEMENT OF THE NECK SEAL UNIT WITH A NEW NECK SEAL UNIT. To replace a damaged neck seal with a new neck seal unit proceed as follows:

Materials Required

Quantity	Description	Reference Number
As Required	Chalk	7510-00-170-9315 or equivalent/ commercial
	or	
1	Neck Seal, Latex	3769AS110-1 or -2 NIIN TBD
As Required	Pencil, Wax (China Marking)	7510-00-264-4612 or 7510-00-223-6676
1	Sealer, Heat Seam and Patch	MIL-S-85634
As Required	Spatula, Dental	No. 324 6520-00-556-8000 or equivalent
As Required	Thread, Nylon, Aramid, High Temperature Resistant, Aromatic Spun Staple, GREEN	MIL-T-83193 8310-00-405-2252

1. Turn coveralls inside out and push over-vest down in the coveralls so that it is out of the way.

2. Turn coveralls inside out and lay coveralls on a flat surface, face up.

CAUTION

Use caution when removing the seam tape as damage can occur to the coverall fabric if you try to remove the tape without sufficiently heating the seam tape.

a. Remove old seam tape from latex neck seal/ coverall fabric by softening adhesive with heat sealer and peeling tape gently away from the coverall.

b. Remove old neck seal by cutting and removing the attachment seam stitches with sharp, long bladed shears, being careful not to damage the coverall fabric.

Step 2.b. - Para 5-185

c. To aid in aligning the neck seal unit to the coverall neck seal opening during placement and sewing, fold coveralls in four equal parts at neckline and draw alignment marks on the coverall neckline opening at the center front, center back center right (right shoulder seam) and center left (left shoulder seam).

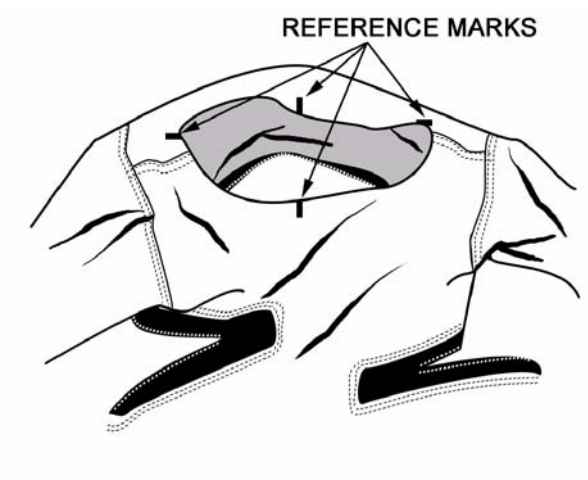

Step 2.c. - Para 5-185

d. Fold neck seal assembly in 4 equal parts. Mark center front, left and right shoulder of fabric.

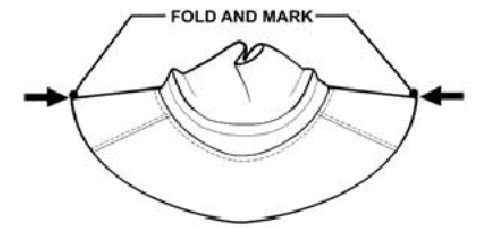

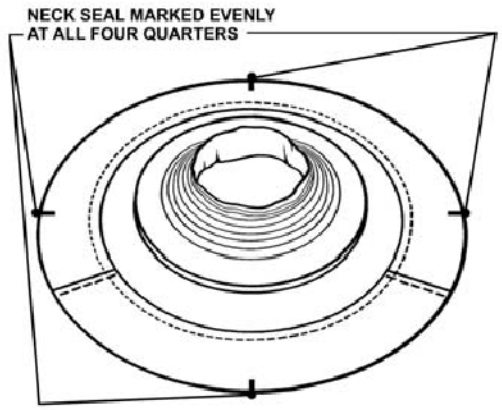

Step 2.d. - Para 5-185

NOTE

Circumference of neck seal and neck opening may not be the same. When sewing the neck seal to the coverall, it may be necessary to stretch the curves of the neck seal fabric slightly to avoid pleats and puckers in the seam. Pleats and puckers will result in leaks.

e. Place neck seal unit inside the neck seal opening (right sides together) so that the 4 alignment marks are matched; front, back, left and right. Starting at one of the alignment marks sew neck seal unit to coverall neck opening). Sew using 5-7 spi, seam type LSq, and allow 3/8inch seam gauge. Over stitch one inch.

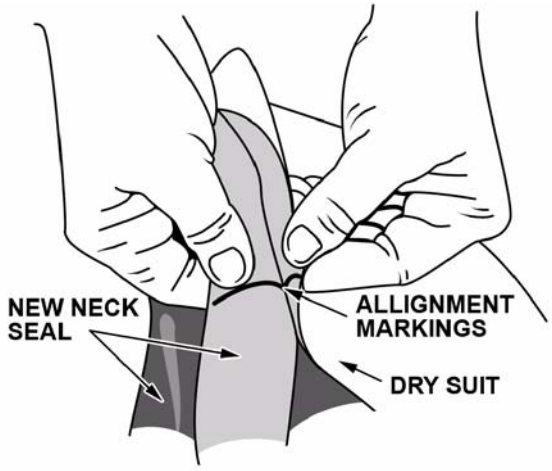

Step 2.e. - Para 5-185

f. If necessary, after removing coveralls from sewing machine trim excess material from neck seal unit so that neckline is clean and even.

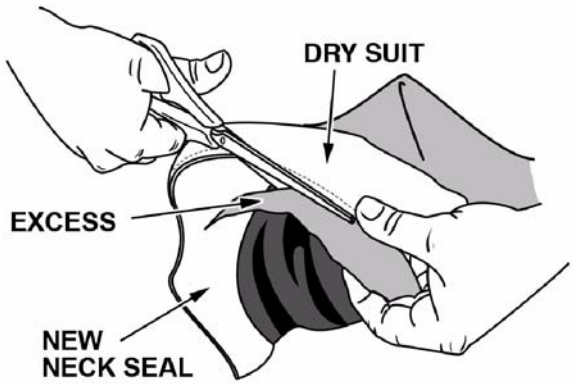

Step 2.f. - Para 5-185

g. Turn right side out. Press seam toward neck. Topstitch in place, 1/4 inch from seam line.

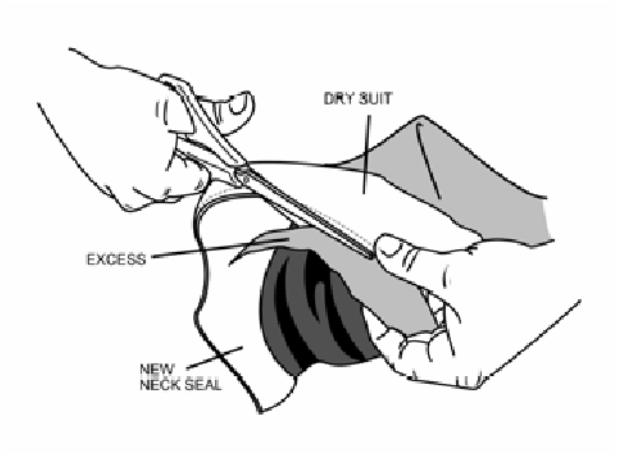

Step 2.g. - Para 5-185

h. Apply seam tape in accordance with paragraph 5-173.

i. Turn coverall right side out.

j. Verify all repairs with either the air leak or water leak test. If no leaks are found coverall shall be returned RFI.

k. Document in accordance with COMNAVAIRFORINST 4790.2.

5-186. I-LEVEL REPAIR OF NECK SEAL UNIT FABRIC PANEL. To repair neck seal unit fabric panel, patch in accordance with paragraph 5-174.

5-187. I-LEVEL REPAIR OF NECK SEAL UNIT LATEX GASKET. Damaged latex gaskets on the neck seal unit cannot be repaired. Replace the neck seal unit if the latex gasket is damaged.

5-188. I-LEVEL REPAIR OF ANTIEXPOSURE SOCKS. Pinholes, small porous areas, small rips or tears and loose seam tape can be repaired in as outlined in Table 5-13 and in accordance with paragraph 5-176.

5-189. I-LEVEL REPLACEMENT OF ANTI-EXPOSURE SOCKS AND APPLICATION OF ANTI-EXPOSURE SOCK SEAM TAPE. Replacement of socks consists of removing the old sock and installing a new sock to the coverall leg. The coverall leg length should already be accurate for the aircrewmember as it was sized during the initial installation procedure when the coverall was placed in to service. To remove and replace unserviceable socks, proceed as follows:

Materials Required

See Materials Required Listing for: AB

NOTE

Socks may be replaced individually or in pairs.

1. Turn coveralls inside out. Reach inside the coverall, down the leg and pull the outer pant leg up into the coverall leg so that it is up and out of the way.

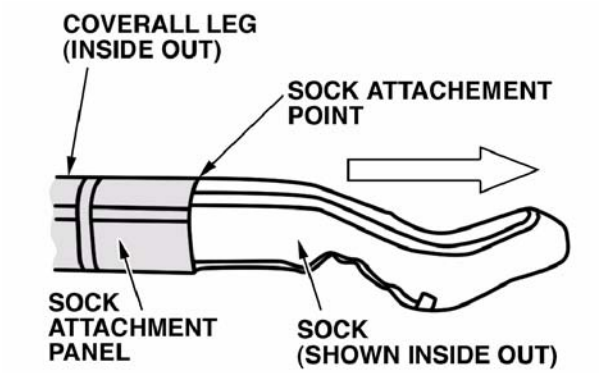

Step 1 - Para 5-189

2. Remove old seam tape from coveralls leg by softening adhesive with heat sealer and peeling tape off.

3. Remove stitching by cutting stitches with scissors or knife.

4. Mark coveralls legs and socks (L and R) on inside and front and back to ensure socks are matched to correct leg during installation.

5. Remove top 2 inches of replacement sock with a pair of sharp scissors.

NOTE

Due to slight differences in circumference of pant and sock opening, it is recommended that alignment marks be added to both items before sewing. Make marks at front, back and both sides, equally spaced around circumference of both openings. It may be necessary to manually induce an uneven feeding of materials into sewing machine in order to

compensate for differences in sock and coveralls leg circumferences, thereby minimizing pleats or puckers.

6. Lay coveralls on a flat surface, face up.

7. Insert sock with right side (color side) out, up in to the sock attachment panel so that right sides of sock and sock attachment panel are facing each other and the sock toe is pointing up (toward front of coverall). Orient sock so that front of sock is lined up with center front of leg.

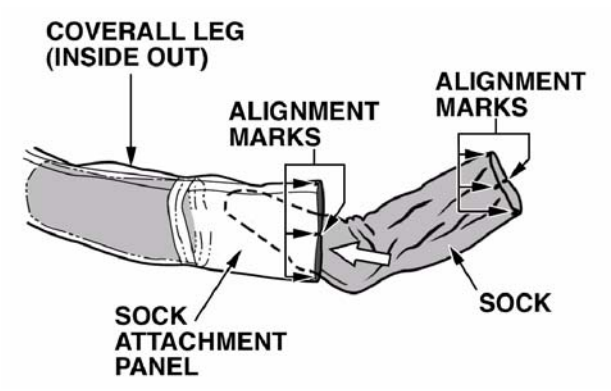

Step 7 - Para 5-189

8. Beginning at front of leg, with leg and sock alignment marks matched, attach sock to sock attachment panel with one row of stitches, 3/8 inch from cut edges, 5 to 7 stitches per inch, using nylon size E thread. Overlap stitching 1 inch. Do not backstitch.

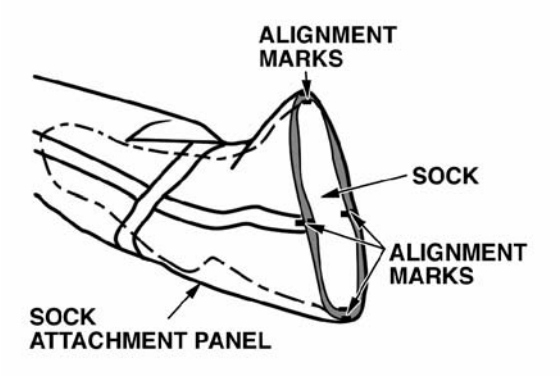

Step 8 - Para 5-189

9. After removing coverall from sewing machine, pull sock out through bottom of leg opening, exposing cut edges of seam. Coverall leg and sock will be inside out.

10. Fold cut edges of seam down over sock as close to the stitch line as possible.

11. Apply one layer of 1-inch seam tape to seam in accordance with paragraph 5-173, keeping stitch line and cut edges as nearly centered under tape as possible. Overlap ends of seam tape 1 inch.

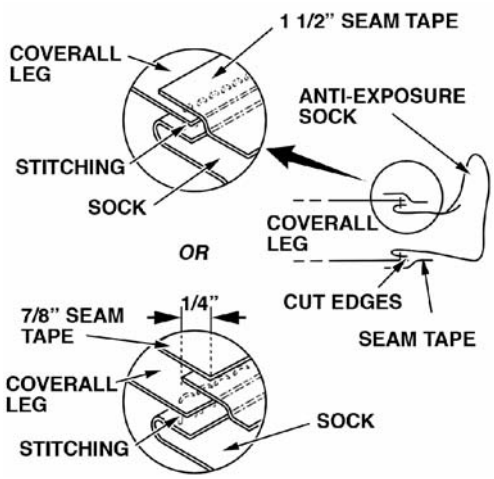

Step 11 - Para 5-189

12. Verify all repairs with either the air leak or water leak test. If no leaks are found coverall shall be returned RFI.

13. Document in accordance with COMNAVAIRFORINST 4790.2.

Section 5-4. OTS-600 Dry Suit, Style 601GBR005B

5-190. GENERAL.

5-191. OTS-600 Dry Suit Style 601BR005B is a Commercial-Off-The-Shelf (COTS) open-purchase undergarment type anti-exposure suit, manufactured by Multifabs Survival Ltd. (Figure 5-43). The OTS-600 was designed to be worn under more durable and abrasion resistant layers (flyer's coverall) and has no reinforcements for high wear areas. The OTS-600 is worn under the flight suit with approved underwear and liners worn underneath (see Chapter 3 for approved undergarments) to provide cold immersion protection. The OTS-600 is composed of a flame retardant, waterproof, breathable fabric that prevents water from leaking in, but allows sweat vapor to evaporate, alleviating heat stress and moisture build-up.

5-192. PROCUREMENT.

5-193. The OTS-600, style 601GBR005B is available from Aerostar Incorporated via open purchase, and through GSA under #GS-07F-0371N. The standard lead-time for delivery is 60 days, however, they offer expedited delivery for in-stock items. Manufacture contact information: Aerostar Inc., 1814 F Avenue, Sioux Falls, SD 51704, Phone (866) 235-5354, FAX (605) 335-0287, email: mail@aerostar.com.

5-194. The OTS-600 has been assigned Work Unit Code (WUC): TBD

5-195. Warranty information is available in paragraph 5-210.

5-196. Repair services are not available from Aerostar Inc.

5-197. Replacement parts are available from Aerostar Inc. in accordance with Table 5-25 and paragraph 5-238.

5-198. CONFIGURATION.

5-199. The OTS-600, Style 601GBR005B (Figure 5-43) is composed of a polychlal/goretex/polyester fleece tri-laminate fabric. It is a one-piece coverall with a front diagonal waterproof main entry zipper, running right shoulder to left hip, a vertical waterproof urine relief zipper closing upwards, and a latex bellows neck seal, neoprene wrist seals on carriers, and stretch waterproof socks in multiple sizes (see paragraph 5-202).

5-200. APPLICATION.

5-201. The OTS-600, Style 601GBR005B is currently authorized for use by male only TACAIR pilots and aircrew. (The OTS-600 is currently not available in women's sizes.) The OTS-600 is not authorized to be used as an outer garment.

5-202. SIZING.

5-203. The OTS-600 shall be properly sized to the aircrewmember based on height and chest measurements shown in Table 5-20. The neck seal size shall be based on the wearer's neck circumference in Table 5-21. The wrist seal size shall be based on the wearer's wrist circumference in Table 5-22. The sock size shall be based on the wearer's shoe (not boot) size in Table 5-23. Take measurements using the procedures in Chapter 10 with aircrewmember wearing the correct size underwear with liner.

Figure 5-43. OTS-600 Dry Suit, Style 601BR005B

Table 5-20. Sizing Guide for OTS-600 Style 601GBR005B.

Height In Ft/In	Chest In Inches	Garment Size
5’0 - 5’4	32 - 34	X-Small Short
5’5 - 5’9	32 - 34	X-Small Regular
5’5 - 5’9	36 - 38	Small Regular
5’10 - 6’3	36 - 38	Small Tall
5’5 - 5’9	40 - 42	Medium Regular
5’10 - 6’3	40 - 42	Medium Tall
5’5 - 5’9	44 - 46	Large Regular
5’10 - 6’3	44 - 46	Large Tall
5’5 - 5’9	48 - 50	X-Large Regular
5’10 - 6’3	48 - 50	X-Large Tall
5’5 - 5’9	52 - 54	XX-Large Regular
6’2 - 6’7	52 - 54	XX-Large X-Tall
5’5 - 5’9	56 - 58	XXX-Large Regular
6’4 - 6’7	56 - 58	XXX-Large X-Tall

Table 5-21. Sizing Guide for Neck Seals

Circumference In Inches	Size
13	1
14 - 15	2
15 - 16.5	3
17 - 17.5	4
18 - 18.5	5
19 - 19.5	6

Table 5-22. Sizing Guide for Wrist Seals

Circumference In Inches	Color Code	Size
5.25 - 5.75	2 White Dots	X-Small
525 - 5.75	1 White Dot	Small
6.5 - 7.25	1 Blue Dot	Medium
7.25 - 8	1 Green Dot	Large
8 - 8.75	2 Green Dots	X-Large

Table 5-23. Sizing Guide for Socks

Sock Size U.S.	Shoe Size
XS	8
S	8.5
M	9
L	10
XL	10.5
XXL	11
XXXL	12

5-204. FITTING.

5-205. OTS-600 NECK AND WRIST SEALS. The OTS-600 Neck and Wrist Seals shall be ordered in accordance with the size chart, and will come installed by the manufacturer in the sizes specified at the time of ordering. Neck and wrist seals shall fit snugly buy not tightly, and shall be in contact with the skin throughout all movements. Neck seals may be trimmed to fit if needed. Wrist seals cannot be trimmed; cutting can damage the integrity of the bonded seam.

CAUTION

Trim neck seals with extreme caution. A smooth trim line is essential, avoiding nicks. Small nicks will turn into large tears during donning and doffing.

1. If neck seal trimming is necessary, mark a line around the circumference of opening. Trimming increments shall not exceed 1/4-inch at a time.

2. After aircrewmember has doffed suit carefully cut along marked line with a sharp pair of scissors.

3. After trimming neck seals, have aircrewmember don suit with closed zipper to determine seal restriction and water-sealing characteristics. Make any further adjustments to the seals in accordance with steps 1 through 3.

5-206. OTS-600 ANTI-EXPOSURE SOCKS. The OTS-600 comes from the manufacturer with a pair of socks attached in the size specified at the time of ordering. If the aircrewmember finds the socks too large or too small, the socks can be removed and replaced in accordance with paragraph 5-242.

5-207. DONNING AND DOFFING.

5-208. Donning the OTS-600 is accomplished by first donning legs, pulling suit crotch up against the groin; then inserting the left arm into its sleeve through the wrist seal, then the right arm; then pulling neck seal over the head from behind. Ensure that entry zipper is completely closed.

5-209. Doffing the OTS-600 is accomplished with assistance. First, unzip the entry zipper and pull the neck seal backward off the head. Next, have a helper pull the suit shoulders off the wearer's shoulders, pulling the sleeves off the arms inside out. The wearer can now step out of the suit.

5-210. WARRANTY INFORMATION.

5-211. Upon initial delivery, Aerostar International, Inc., warrants all garments to be free of defects in material and workmanship. Defective garments will be either repaired or replaced, at manufacturer's option. Freight charges for repaired or replacement product shall be paid by the Fleet activity. Returns shall be shipped to Aerostar International Inc., 200 East 6th Street, Sioux Falls, SD 57104. Please include: name, return shipping address, telephone number and information detailing exactly the nature of the problem.

5-212. MODIFICATIONS.

5-213. There is no authorized modifications for the OTS-600.

5-214. MAINTENANCE.

NOTE

Quality Assurance (QA) Inspection Requirements are included in inspection, repair and replacement procedures. When a procedure is identified with (QA), an authorized quality assurance representative shall verify that the procedure was correctly accomplished before the next step can be performed.

5-215. Repair and replacement function for the OTS-600 will be accomplished at the Organizational (O-Level) and Intermediate (I-Level) level or above. Maintenance of the OTS-600 consists of inspection, cleaning, repair and replacement. All maintenance actions shall be documented in accordance with COMNAVAIRFORINST 4790.2. In addition, a damage chart shall be used in accordance with paragraph 5-216.

NOTE

OTS-600 shall be inspected in the same manner as the A/P22P-6 Series assemblies.

5-216. MAINTENANCE DOCUMENTS. Documents used to record history and maintenance information consists of those documents described in Chapter 2 of this manual and the damage chart (Figure 5-53). The damage chart is also intended to aid the O-Level custodians of the coverall in describing other needed repairs to the I-Level technicians. All maintenance actions and inspections shall be documented in accordance with COMNAVAIRFORINST 4790.2.

5-217. SERVICE LIFE. The OTS-600 shall remain in service 10 years from date of manufacture or until beyond economical authorized repair, whichever comes first.

5-218. INSPECTION.

5-219. PREFLIGHT INSPECTION. The preflight inspection shall be performed by the aircrewmember to whom the OTS-600 is issued prior to each flight. To perform the inspection, proceed as follows:

1. Slide fasteners for proper functioning.

2. Seam tape for loose tape, separation, cuts, tears, and worn areas.

3. Neck and wrist seals for nicks, cuts, tears, holes and proper bonding to suit.

4. Socks for loose tape, separation, cuts, tears, and worn areas.

5. Assembly for cuts, tears, worn areas, and deterioration.

5-220. POSTFLIGHT INSPECTION. To perform the postflight inspection, perform a preflight inspection in accordance with paragraph 5-219 and then proceed as follows:

1. Hang OTS-600 on a plastic hanger and allow to air-dry in a cool, dry, well-ventilated area.

5-221. PLACE-IN-SERVICE INSPECTION (PIS). A PIS inspection shall be accomplished upon receipt of the OTS-600. Prior to initial issue of the OTS-600

5-61to the aircrewmember or when removing from long-term storage. The PIS inspection is at times an exclusively O-Level function, and at other times is a joint, O-Level and I-Level effort. The differences are outlined below. To perform the PIS inspection, proceed as follows below:

5-222. INITIAL ISSUE PIS INSPECTION.

NOTE

Initial PIS does not require a leak check as the OTS-600 comes with a documented and warranted leak check. If the official documentation of the manufacturer's leak check does not accompany the OTS-600 do not place the OTS-600 in service until documented leak check has been received from the manufacturer.

1. O-Level shall:

a. Size/fit OTS-600 in accordance with paragraphs 5-202 through 5-206.

b. Perform 180-day in accordance with paragraph 5-224.

c. Clearly print the aircrewmember's last name and initials inside the OTS-600 centered on the back below the neck seal, using white indelible ink. The inside of the OTS-600 is a dark blue, it is important to ensure that the name can be clearly read.

CAUTION

Do not use ballpoint pens or pencils, as they will puncture suit.

d. If discrepancies are found during any point in the initial PIS inspection, see warranty information in paragraph 5-210.

e. Document new PIS in accordance with COMNAVAIRFORINST 4790.2. Attach factory certification directly to the OPNAV 4790/159 card and place in aircrewmember's personal aircrew flight equipment record as a permanent part of this historical records.

5-223. PIS INSPECTION FOR REMOVAL FROM LONG TERM STORAGE.

1. O-Level shall:

a. Have aircrewmember Don the OTS-600 to ensure the OTS-600 still fits properly in accordance with paragraph 5-204.

b. Perform all the steps of the 180-day special inspection in accordance with paragraph 5-224.

c. Forward the OTS-600 to I-Level for leakage test.

2. I-Level shall:

a. Perform leak check in accordance with paragraph 5-226 or 5-227.

b. Heat-seal tape and patch as required in accordance with paragraph 5-61.

c. Document new PIS in accordance with COMNAVAIRFORINST 4790.2.

5-224. 180-DAY SPECIAL INSPECTION. The 180-day special inspection shall be performed at the O-Level, on all in-service OTS-600, upon PIS and every 180/360 days thereafter. To perform the 180-day inspection proceed as follows:

Materials Required

Quantity	Description	Reference Number
As Required	Silicone Lubricant	Table 5-25, Note 2

1. If required, clean assembly components in accordance with paragraph 5-233.

2. Inspect as follows:

a. Place OTS-600 on flat clean surface.

b. Inspect surface of OTS, wrist seals, neck seals, and socks for damaged fabric, holes, and loose/broken stitching.

c. Inspect slide fasteners for damaged chain, loose/missing teeth and stops, improper chain alignment, damaged or split end seal blocks, damaged or missing pull tabs (metal and fabric), loose/frayed seam tape. Inspect slide fasteners for proper operation. Inspect overall condition of OTS.

d. Inspect seam tapes for looseness or fraying.

e. Chart any discrepancies on damage chart (Figure 5-53) and forward to I-Level for repair or further testing.

f. When 360-day inspection is required, forward OTS-600 to I-Level for inspection.

g. Document inspection in accordance with COMNAVAIRFORINST 4790.2.

NOTE

Authorization is granted to O-Level to stitch wrist and neck seals and socks onto the OTS-600 provided heat-sealing and leakage tests are performed at I-Level.

5-225. 360-DAY SPECIAL INSPECTION. The special 360-day inspection is performed jointly by O-Level and I-Level every 360 days as follows:

1. O-Level shall perform all steps of the 180-day special inspection in accordance with paragraph 5-224.

2. I-Level shall perform the water leakage test on the OTS-600 in accordance with paragraph 5-227 or the air leakage test (recommended method of testing the OTS-600) in accordance with paragraph 5-226 using the 1936AS100-1 air tester.

5-226. AIR TEST USING LEAK TEST FIXTURE 1936AS100-1. To test the OTS-600 drysuit proceed as follows:

Materials Required

Quantity	Description	Reference Number
As Required	Bottle, Applicator, Screw Cap with dispensing spoiut, or equivalent plastic, 28 oz capacity or Sponge, Large	NIIN 00-448-7952 or commercial
As Required	Clamps, Wrist Seal and/or Neck Seal	Supplied with Water Test Stand
As Required	Dish Washing Liquid Palmolive or equivalent	Commercial
As Required	Leak Test Fixture procrued through TYCOM	1936AS100-1
As Required	Lubricant Stick, Zipperease	00-999-7548

1. Prepare soapy solution by mixing 1/2 ounce dish washing liquid to 16 oz. of water is spray bottle. Shake contents until foam appears in spray bottle. A large sponge dipped into a basin of soapy water 1/2 fl. oz. to one gallon of water) can also be used as a method to find leaks.

2. Lubricate main body and convenience slide fasteners with Zipperease. Close all slide fasteners and ensure sliders are tight against top stops. Do not turn the OTS-600 inside out, test with grey knit face outermost.

3. Loosen the locking nut of the test fixture assembly so that the upper plate can be raised approximately 3 inches above the lower plate.

4. Place the test fixture inside the coverall at the center of the neck seal opening so the lower plate rests on the inside back of coverall.

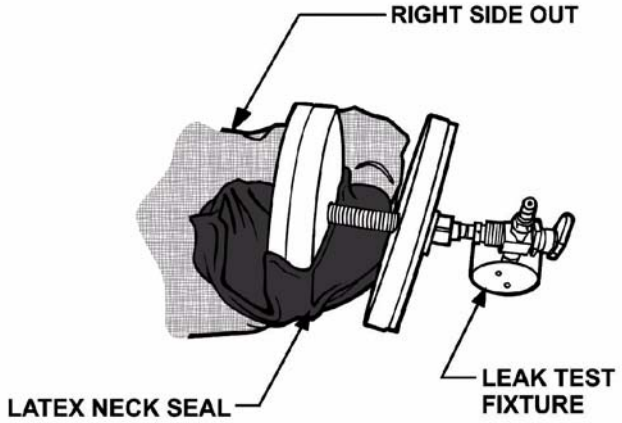

Step 4 - Para 5-226

5. Sandwich the latex neck seal between the upper and lower plates. Avoid creasing or pleating the latex.

6. Tighten the locking nut finger-tight to compress the neck seal flat between the upper and lower plates. Tighten with a wrench 1/2 turn more.

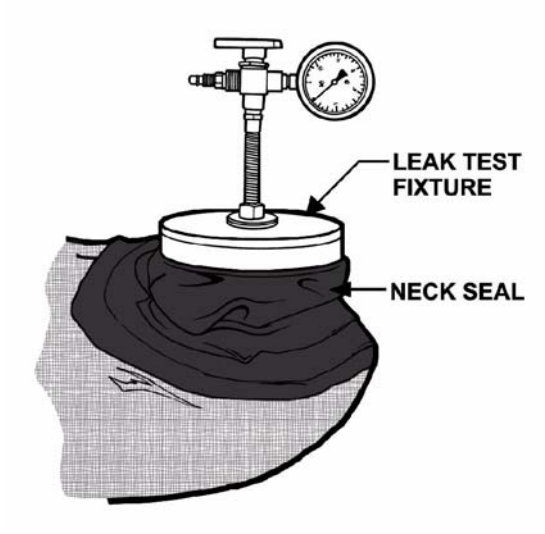

Step 6 - Para 5-226

7. Fold wrist seals over twice, and clamp with wrist seal clamps.

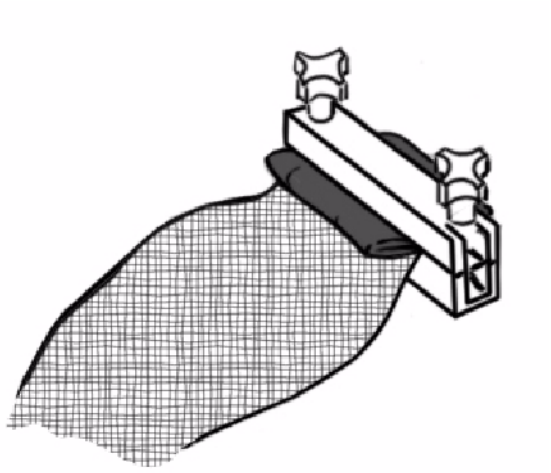

Step 7 - Para 5-226

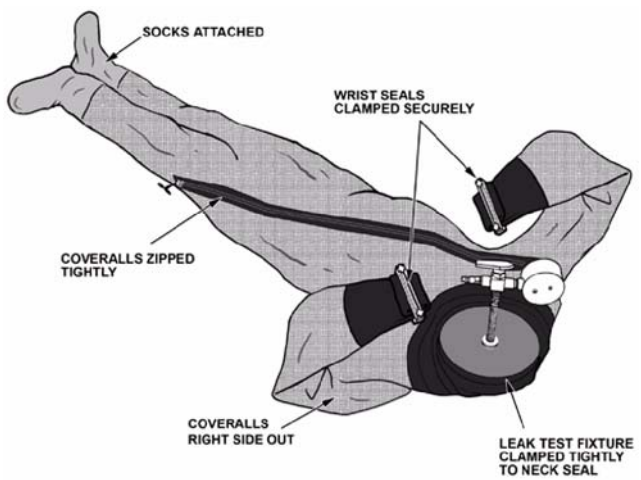

Step 7a - Para 5-226

CAUTION

Ensure pointer on 3-way valve is pointing toward gauge when connecting air source.

NOTE

It is recommended that the coverall be filled and deflated three times to allow the air temperature inside the coverall to stabilize. The air temperature will be cold coming out of the compressor and will give a false negative reading (a pressure loss) until it comes to room temperature.

8. Connect a dry, filtered, clean low-pressure air source to the test fixture at the male quick disconnect fitting. Slowly rotate the black pointer on the 3-way valve toward the air inlet and slowly inflate the coveralls to 7.5 inches of water. If you go beyond the 7.5 inches of water pressure rotate the black pointer to the bleed hole in the 3-way valve to bleed excessive pressure down to 7.5 inches of water. Leave pointer facing gage and observe gage for pressure drop. If gage pressure has dropped, ensure the nut on the top plate is secure and not leaking and the wrist seal clamps are secure and not leaking. If pressure continues to drop, apply soapy solution around the outer edge of the upper plate assembly and the latex neck seal. If bubbles form, indicating that a leak is present, deflate coverall and repeat steps 5 through 8. If all clamps are secure and not leaking but the coverall cannot be stabilized at 7.5 inches of water then there is probably a catastrophic leak in the coveralls; the leak needs to be identified and repaired

before proceeding with the air test; proceed to step 10. If water pressure is stabilized; proceed to step 9.

9. When confident that a good seal between test fixture and suit is made, and that pressure has been stabilized at 7.5 inches of water pressure, turn off airflow to the coverall by turning the black pointer on 3-way valve towards gage. Leave coverall at pressure for 5 minutes. If pressure drop is less than 1 inch of water pressure after the 5 minute test period the suit is RFI; continue to step 17. If pressure drop is greater than 1 inch of water continue to step 10.

10. If pressure reading drops more than 1 inch of water pressure during the 5 minute test period, visually inspect the coverall for the damaged area. Should the damaged area not be detected, re-inflate the coverall with a continuous airflow pressure of 7.5 inches of water pressure.

11. Using the palm of your hand, cover the complete surface of the suit until the damaged are is detected. Mark damaged area and deflate the suit and repair in accordance with paragraph 5-61.

12. If no damage can be detected in steps 10 or 11 then using a sponge cover the suit with soapy water starting at the neck working you way down to the feet ensuring that the front of the suit is completely covered.

CAUTION

Do not leave suit inflated and covered in soap solution for longer than 5 minutes.

13. Check complete front of suit for any leaks using you waterproof pen. Mark any leaks found on the suit (leaks will show as continuous bubbling forming on the suit surface).

14. Once all leaks are recorded, dry the suit using a towel.

15. Turn suit over and repeat test process on the back of the suit.

16. On completion of the test, check that all leaks are clearly marked on the suit.

17. Switch off compressor and disconnect air source. Rotate pointer toward air inlet and loosen nut to dump pressure. Remove air line, wrist clamps and faceplate assembly.

18. Rotate pointer arrow toward gauge to return gauge reading to zero.

19. If coveralls fail the air leak test and the location of the leaks cannot be immediately determined by feeling for escaping air or by detecting bubbles with the use of a soapy solution, then the location of the leak or leaks shall be isolate with the water test device in accordance with paragraph 5-227.

20. Allow suit to dry.

21. Repair if required in accordance with paragraph 5-61.

22. Any suit repaired for leakage must be retested in accordance with steps 1 through 23.

23. Document inspection in accordance with COMNAVIARFORINST 4790.2.

5-227. WATER TEST DEVICE.

WARNING

Prior to conducting water test the Aircrew Survival Equipmentman must be familiar with the water test device operating procedures in NAVAIR 17-15GB-504.

NOTE

Replacement water pumps, annotated in the 17-15GB-504, are no longer available. To replace a failed water pump, use 4320-01-384-0773 as a suitable substitute.

5-228. WATER TEST. The water test is a two-person operation. To perform the water test, proceed as follows:

NOTE

Water Testing criteria for the OTS-600 Series Coveralls shall be: One (1) drop of water falling from the underside of the coverall in 10 seconds or less shall be repaired.

Materials Required

Quantity	Description	Reference Number
1	Water Test Device	MIL-W-85635
As Required	Bleach, Laundry (Powder or Liquid)	A-A-1427 NIIN 00-598-7316 or commercial
1	Pencil, China Marking	SS-P-196
1	Chalk	SS-C-266
2	Wrist Clamp	Supplied with Water Test Device (See Note)
1	Neck Clamp	Supplied with Water Test Device (See Note)
As Required	Fastener Tape, Hook, Type II, Class 1, 2 Inches Wide	MIL-F-21840 NIIN 00-450-9837 NIIN 00-926-4931 NIIN 00-405-2267
As Required	Fastener Tape, Pile, Type II, Class 1, 2-Inches Wide	MIL-F-21840 NIIN 00-405-2265 NIIN 00-498-6631 NIIN 00-926-4930
As Required	Rag, Wiping	A-A-2522 NIIN 00-205-1711 or equivalent

Note: An alternate neck/wrist seal clamp may be fabricated locally in accordance with paragraph 5-458.

1. Ensure water test device (Figure 5-44) is ready for operation by checking the following:

a. Fill water reservoir to fill line with (approximately 30 to 35 gallons) clean, fresh water.

CAUTION

Do not exceed 1/4 cup of non-chlorine-bleach for each water reservoir full of water. Reservoir shall be drained and water replaced at least monthly or more often if water becomes dirty, slimy, or stagnant. OTS-600 coverall shall be tested with a commercial non-chlorine bleach only as the gray outer layer of the coverall is vulnerable to bleach.

NOTE

Clean fresh water or non-chlorine bleach shall be used when testing OTS-600 drysuits. Non-chlorine bleach can be used as an alternative to chlorine bleach with all other drysuits.

b. One-quarter cup of non-chlorine bleach shall be mixed with water at initial filling and at each subsequent refilling of the reservoir when testing the OTS-600 coverall.

NOTE

Due to the unique construction of the OTS-600, the suit is not turned inside out for testing. All repairs to the OTS-600 are made on the outside of the coverall, on the external gray knit face.

c. Ensure hose is connected to pump.

d. Ensure electrical cord is connected to a three-prong grounded outlet, 115V, 60-Hz power source.

NOTE

Water test device is equipped with a ground fault interrupter that will turn electrical power off in the event that electrical circuit is not properly grounded.

2. Lock inspection platform in horizontal position with upper platform open as shown in Figure 5-45.

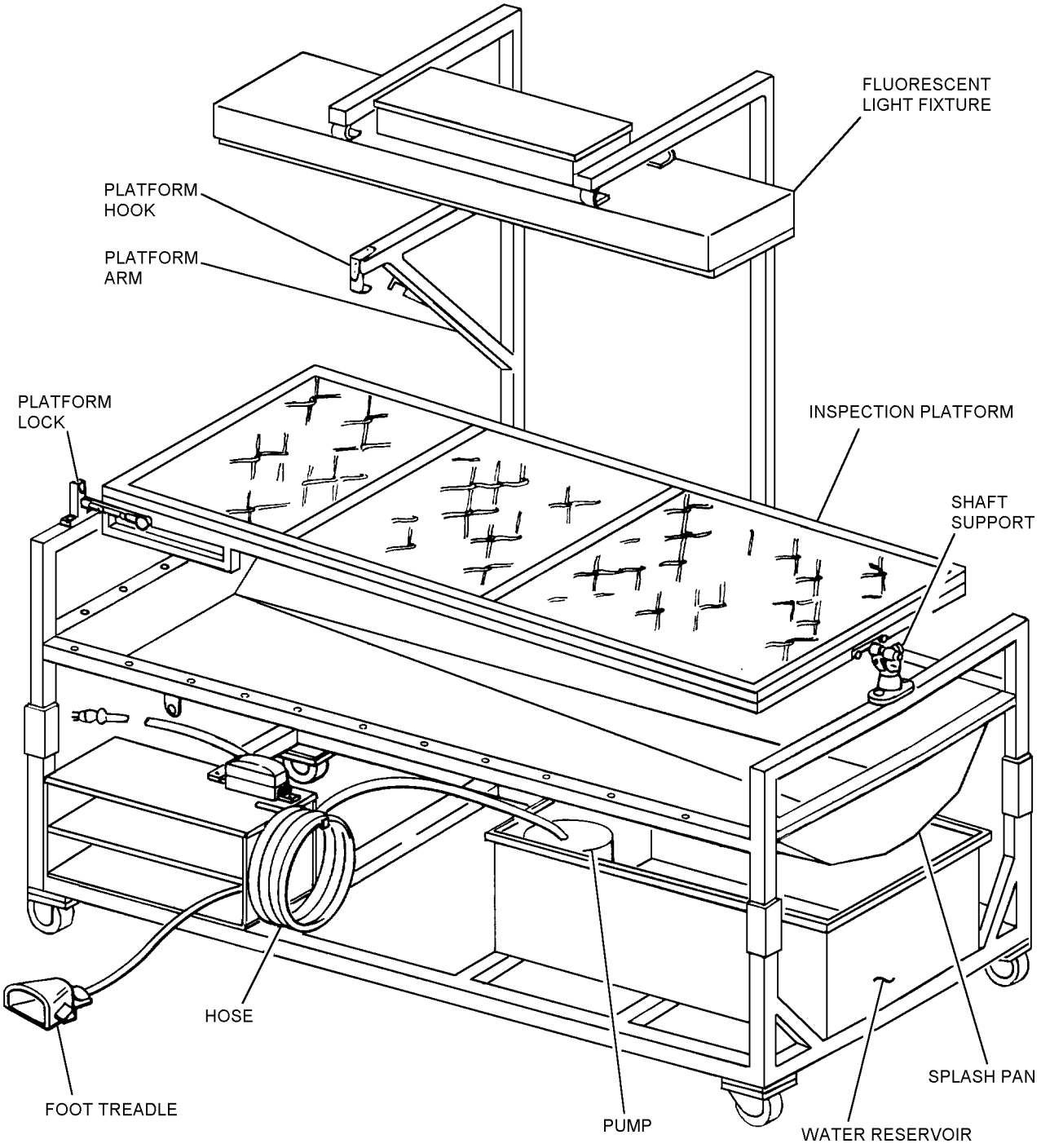

5-13

Figure 5-44. Water Test Device

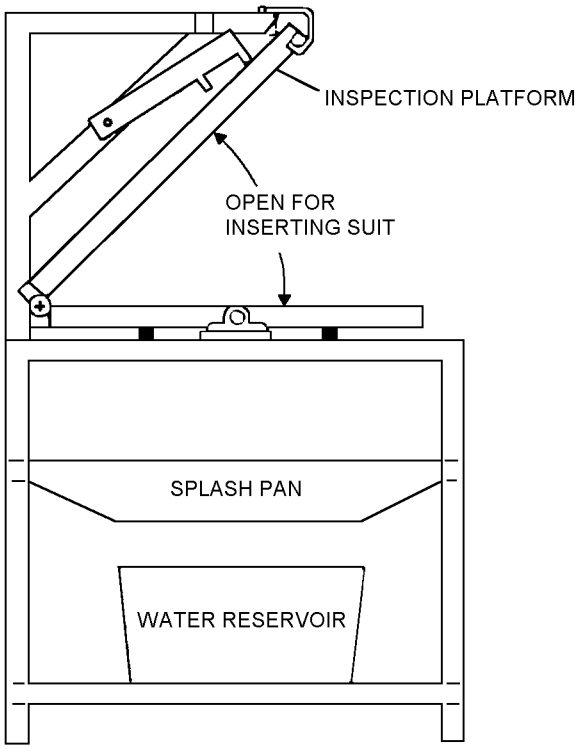

5-14

Figure 5-45. Water Test Device (End View)

CAUTION

Prior to beginning test, remove watches, rings, and any other sharp objects. Care should be taken while placing coverall into inspection platform so that nothing catches the coverall that might cause punctures or tears to the material. Also, ensure coverall does not get pinched when platform is closed.

3. OTS-600 coverall is water-tested right side out. Close both slide fasteners tightly. Lay coverall on bottom half of inspection platform, positioning neck opening to left and entrance slide fastener facing up.

4. Close off left wristlet (wristlet closest to platform hinge) and neck opening with clamps provided. Openings should be folded prior to clamping to avoid leakage.

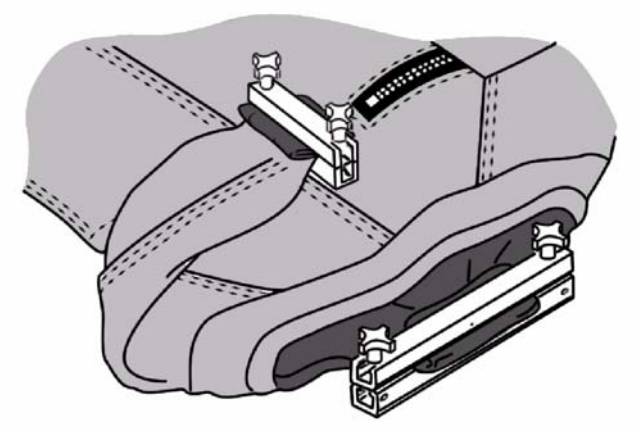

Step 4 - Para 5-228

CAUTION

Ensure that there are no twists or folds and garment is not pinched.

5. Strips of 2-inch pile tape shall be routed through bottom section of inspection platform and loosely around socks above ankle area prior to filling coverall with water to minimize stretching of socks. Secure in place with hook tape.

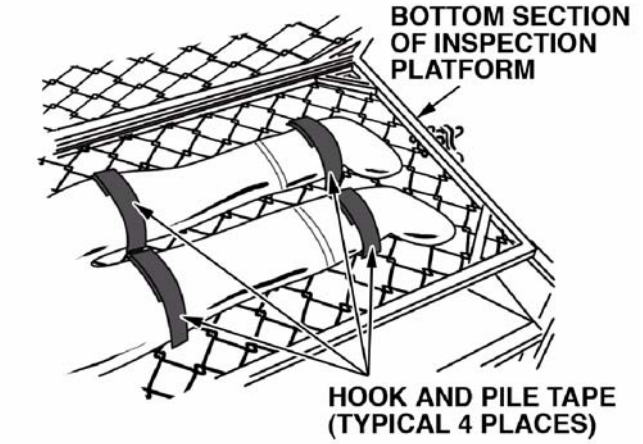

s4p5-129

Step 5 - Para 5-228

6. Strips of 2-inch pile tape shall be routed through bottom section of inspection platform and loosely around each thigh, just below crotch, to help separate legs to facilitate visual inspection. Secure in place with hook tape.

7. Extend sleeve of coverall through opening provided in side of inspection platform and close top gate. Secure all four latches.

WARNING

Coveralls must be filled with water as described below. Do not attempt to shortcut filling procedures.

NOTE

Ensure bottom portion of remaining clamp with knobs is in hanger provided in top of fixture prior to filling coverall with water. Place top portion of clamp within easy reach of operator. Water test shall be performed in one complete cycle, start to finish, without interruption.

8. Insert two fingers into sleeve opening. Place hose in sleeve.

NOTE

If water does not flow from hose within 5 seconds after operating foot switch, prime pump by switching on and off several times.

9. While holding hose and arm, turn pump on by depressing footswitch and fill coverall to within 6 inches of sleeve opening. Allow trapped air to escape through sleeve opening while filling.

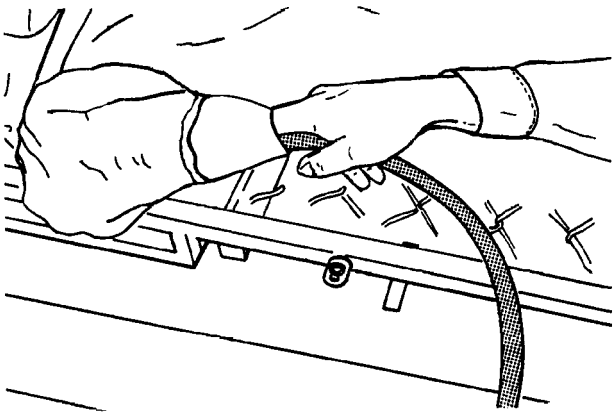

5p91s9

Step 9 - Para 5-228

10. Turn pump off. Remove hose. Gently rock the coverall back and forth in the test stand to dislodge any stray air pockets that may be inside the suit. Close sleeve opening with clamp.

CAUTION

Do not mark coverall with ballpoint pen or lead pencil.

11. While the inspection platform is in the horizontal position, inspect back of the coverall for leaks, including areas under the thigh and ankle securing tapes by temporarily loosening the hook and pile closures. Where water appears on coverall surface, blot area dry with an absorbent material (paper towel, etc). If one (1) drop of water falls from the underside of the coveralls in 10 seconds or less, the coverall shall be repaired. Mark suspect area for patching using only china marking pencil or tailor's chalk.

NOTE

Assistance may be required to hold the platform in position during step 12. Ensure that securing tapes at thighs and ankles are closed prior to rotating platform.

12. Rotate the inspection platform 180° and inspect the front of the coverall and slide fastener box stitching near seal block for any water leakage. If water appears, mark area for repair. Inspect and mark leak areas in accordance with step 11 procedures.

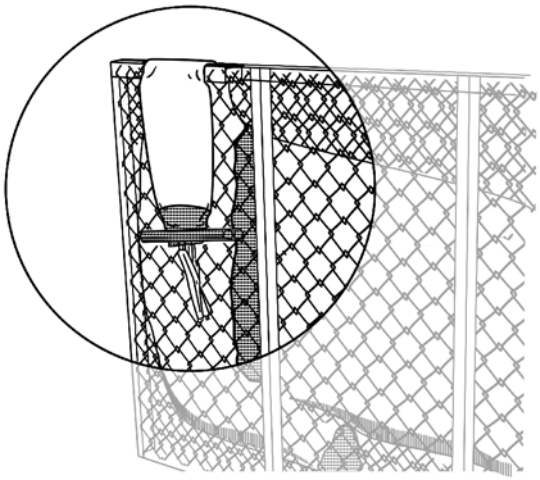

Step 12 - Para 5-228

13. Rotate the inspection platform back to the horizontal (front facing upward) and lock in place. The coverall should be firm to the touch, (step 13) like a well-defined helium balloon, not gelatinous or wobbly like an under inflated helium balloon, (step 13A).

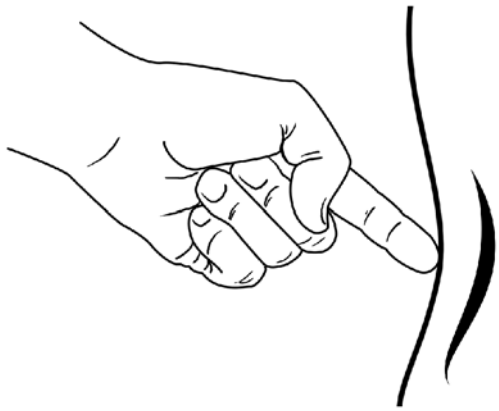

Step 13 - Para 5-228

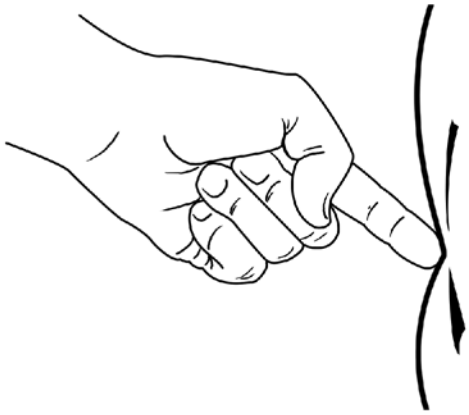

Step 13A - Para 5-228

NOTE

Because of all the different sizes and modifications authorized on the coveralls it is impractical to try to give accurate measurements for the amount of water that each coverall should hold in order to be tested. The concept is to get enough water in to the coverall to have the water pressing hard enough against the fabric and seams to uncover any flaws in the material that would cause the coverall to fail it's function; that of keeping an aircrewmember alive until rescue personnel can locate them.

14. While the inspection platform is in the horizontal position (front of coverall facing upwards), inspect back of the coverall (underside) for leaks, including areas under the thigh and ankle securing fastener tapes by temporarily loosening the hook and pile closures. Where water appears on coverall surface, blot area dry with an absorbent material (paper towel, etc.). If one (1) drop of water falls from the underside of the coveralls in 10 seconds or less, the coverall shall be repaired. Mark suspect area for patching using only china marking pencil or tailor's chalk.

NOTE

All four sides of the coverall will be inspected in steps 14 through 17. Always push the platform up and away from you, 45° at a time so that each of the four steps completes the entire coverall.

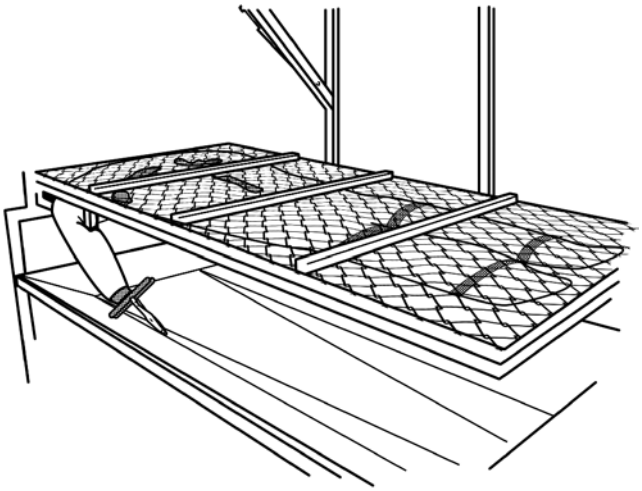

Step 14 - Para 5-228

15. Rotate the platform 45° to the vertical position; lock in place with the platform arm hook. Inspect the portion of the coverall closest to the splash pan. Where water appears on coverall surface, blot area dry with an absorbent material (paper towel, etc.). If one (1) drop of water falls from the underside of the coverall in 10 seconds or less, the coverall shall be repaired. Mark suspect area for patching using only china marking pencil or tailor's chalk.

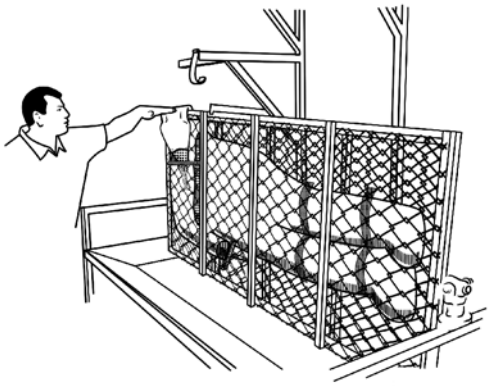

Step 15 - Para 5-228

16. Rotate the platform 45° to the horizontal position again so that the front of the suit is at the bottom closest to the splash pan. Inspect the front of the coverall and slide fastener box stitching near seal block for any water leakage. Where water appears on coverall surface, blot area dry with an absorbent material (paper towel, etc.). If one (1) drop of water falls from the underside of the coverall in 10 seconds or less, the coverall shall be repaired. Mark suspect area for patching using only china marking pencil or tailor's chalk.

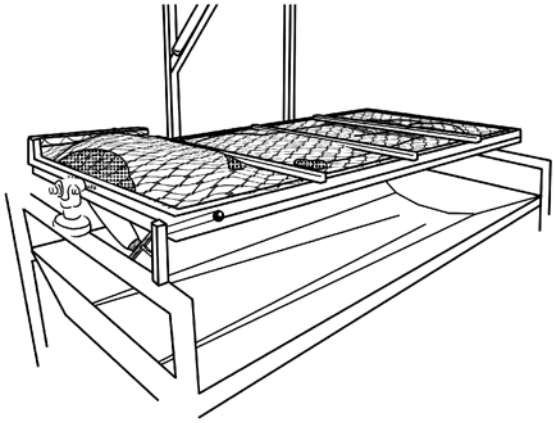

Step 16 - Para 5-228

17. Rotate the platform 45° to the vertical and lock inplace with the platform arm hook so that the sleeve with the arm clamp is resting in the bottom of the splash pan. Inspect the final portion of the coverall closest to the splash pan. Where water appears on coverall surface, blot area dry with an absorbent material (paper towel, etc.). If one (1) drop of water falls from the underside of the coveralls in 10 seconds or less, the coverall shall be repaired. Mark suspect area for patching using only china marking pencil or tailor's chalk.

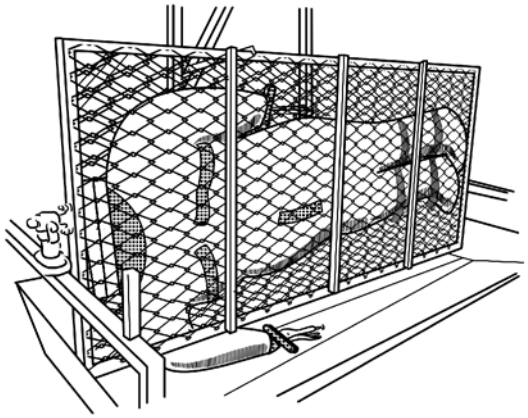

Step 17 - Para 5-228

18. To drain the water from the coverall, release the platform arm hook and rotate the platform up and past the horizontal position (this will get as much pressure off the sleeve opening as possible). While holding the platform in position with one hand grasp the sleeve opening firmly closed with other hand have an assistant slowly release the arm clamp. Slowly allow the sleeve to open and water to drain out into the splash pan.

NOTE

When the clamp is first released, water will gush out of the coveralls and all over the floor unless the sleeve opening is held firmly closed. When the clamp is released and opened gradually allowing only a small amount of water to escape at a time.

Assistance may be required to hold the platform in place, release the clamp and hold the sleeve closed all at the same time.

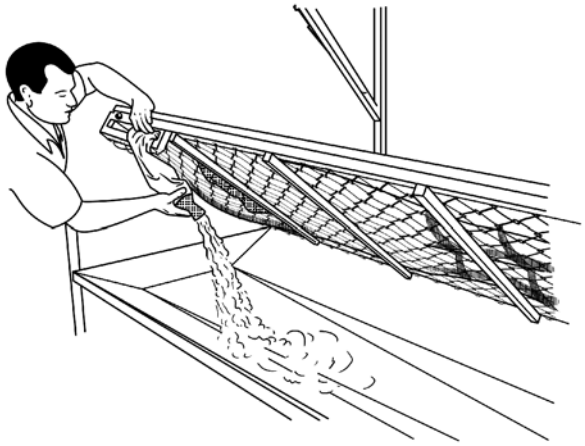

Step 18 - Para 5-228

19. Slowly rotate the platform downwards as the water continues to drain from the coverall.

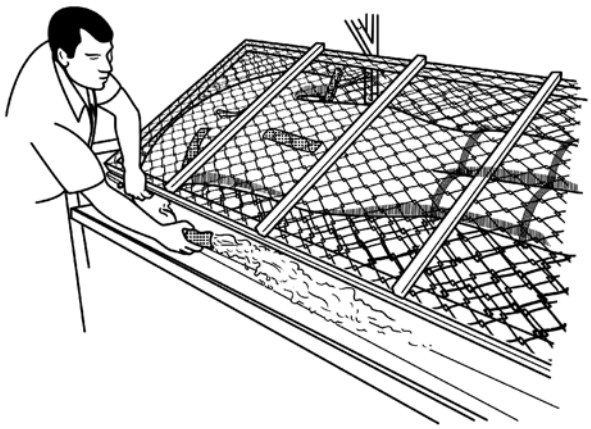

Step 19 - Para 5-228

20. Lock the platform in the vertical position and let the coverall drain as completely as possible.

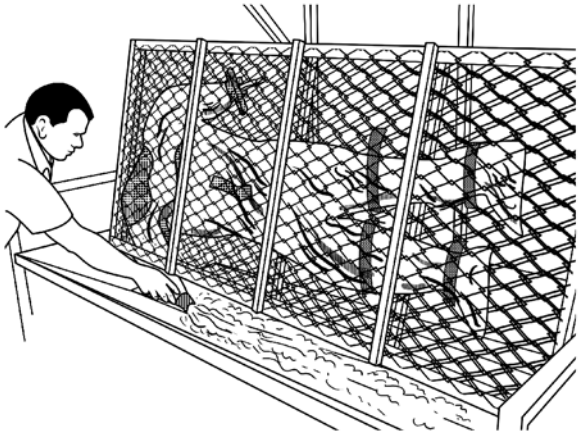

Step 20 - Para 5-228

21. Rotate the platform back to the original horizontal position and lock in place.

22. Open inspection platform, remove hook and pile tape used to secure thighs and ankles, remove clamps, and drain any remaining water.

23. Open entrance slide fastener and turn coverall right side out.

NOTE

When patching of the coverall is required, drying of the defective area of the CWU-62/P can be accomplished by subjecting the area to low-pressure air or by a five second application of the MIL-S-85634 seam and patch heat sealing machine. When drying the full garment in clothes dryer, place the garment in a locally fabricated mesh bag to minimize possible abrasion. An appropriate mesh material can be purchased from: Sterling Net and Twine Co., Inc., 18 Label Street, Montclair, NJ 04042. Phone (201) 783-9800.

24. With slide fasteners open, dry coverall in a clothes dryer set at its lowest temperature setting for 20 minutes, or hang coverall on wooden or plastic hanger and allow to air dry. After hanging for a maximum of 4 hours, check coverall for dryness. If water has collected inside anti-exposure socks, pull socks out through entrance opening and allow to dry.

5-229. STORAGE.

CAUTION

The OTS-600 should be stored in a cool dark place as prolonged exposure to ultraviolet rays, other sources of ozone, and high heat and humidity will degrade adhesives and all types of rubber. Keep the OTS-600 away from oil and grease products as they dissolve adhesives. Do not insert hanger through neck seal opening when preparing coveralls for short-term storage. Ends of hangers can puncture and tear the neck seal. Insert hanger through the entry zipper from below the neck seal opening.

5-230. SHORT TERM STORAGE. Between flights, the OTS-600 shall be hung on a plastic hanger or folded in accordance with Figure 5-14 and stored in a clean well-ventilated protected area.

5-231. SEASONAL STORAGE. Seasonal storage is storage during warmer months when anti-exposure protection is not required for flight. OTS-600 in seasonal storage shall be maintained on its normal 180/360-day inspection cycles and does not require a new PIS inspection upon removal from seasonal storage. Seasonal storage does not require documentation as "seasonal storage". Store in accordance with paragraph 5-232.

5-232. LONG TERM STORAGE. OTS-600 being stored rather than being maintained on a 180/360-day inspection cycle for whatever reason shall be considered out of service and in long term storage and must be documented as such. OTS-600 being removed from long term storage shall have a PIS inspection completed and documented. To place the OTS-600 in seasonal or long term storage, proceed as follows:

1. Ensure that OTS-600 is clean and completely dry.

2. The manufacturer advises that zippers be open for long term storage.

3. Fold OTS-600 in accordance with Figure 5-14. Place OTS-600 in individual plastic bags and clearly label with aircrewmember's name.

4. Loosely pack the bagged OTS-600 in storage bins, cruise boxes, or other appropriate storage containers.

5. Stow closed containers in a cool dry area.

5-233. CLEANING.

5-234. For cleaning and treatment of OTS-600 coveralls proceed as follows:

Materials Required

Quantity	Description	Reference Number
As Required	Detergent, General Purpose	MIL-D-16791 NIIN 00-282-9699 or Equivalent or Commercial*
As Required	Simple Green	Commercially obtained

*Cold Power, low sudsing powdered detergent, or equivalent, recommended for cold water.

CAUTION

Ensure that slide fasteners are closed prior to laundering/cleaning. Do not dry-clean coveralls. Do not use bleaches or similar additives for cleaning. Do not use commercial laundry facilities. Simple Green- shall be used, for spot cleaning only. Do not use hot air tumble dryers - they will damage the OTS-600.

1. Spots and areas suspected of having been in contact with acid compounds, grease, oil, etc, shall be swabbed with Simple Green.

2. Close slide fastener. Hand launder or use an automatic washer that has a delicate cycle. Ensure water used is cold. Follow detergent manufacturer's recommendations for amount of detergent to use. Wash cycle shall not exceed 3 minutes.

3. Rinse garment three times. Use clean, fresh water for each rinse. Each rinse cycle shall be a minimum of 1 minute.

5-235. REPAIRS AND FABRICATIONS.

5-236. Instructions for performing repairs, replacement or fabrications of the OTS-600 shall be limited to

those listed in Table 5-7, and paragraphs 5-235 through 5-246. All repairs shall be verified RFI with the leakage test in accordance with paragraph 5-226 or 5-227 after repairs.

5-237. OTS-600's are purchased with a warranty as outlined in paragraph 5-210. Before attempting any repairs of the OTS, check the warranty.

5-238. Table 5-25 lists the OTS-600 replacement parts, which are available from Aerostar Inc. For any repairs or replacement aprts that require the use of seam tape, the seam tape used on the CWU-62 series drysuits is authorized for use on the OTS-600 drysuit. The seam tape supplied in the repair kit by fultifabs (Table 5-25) can be used but is not mandatory.

5-239. REPLACEMENT OF NECK SEAL, FIRST REPLACEMENT.

1. Place suit on flat table.

2. Carefully cut off existing neck seal around the edge of the seam seal tape, as close to the black knit tape as possible.

3. Select the required neck seal size from Table 5-21.

NOTE

Authorization is granted to O-Level to stitch wrist and neck seals and socks onto the OTS-600 provided heat-sealing and leakage tests are performed at I-Level.

4. Install new neck seal in accordance with steps 4 through 13 of paragraph 5-86 with the exception that the neck seal seam shall be on the outside (the taped side) of the OTS.

5. Forward to I-Level for leakage inspection.

6. Document repair and inspection in accordance with COMNAVAIRFORINST 4790.2.

5-240. REPLACEMENT OF NECK SEAL, SUBSEQUENT REPLACEMENT.

CAUTION

Neck seal replacement is accomplished with the seam tape on the outside of the garment not the inside like the 62, 86 and 87 series anti-exposure coveralls.

1. Select neck seal from Table 5-21 and forward OTS-600 to I level for removal and replacement in accordance with paragraph 5-83 ensuring that the neck seal seam is on the outside (the taped side) of the OTS-600.

5-241. REPLACEMENT OF WRIST SEALS.

CAUTION

Wrist seal replacement is accomplished with the seam tape on the outside of the garment not the inside like the 62, 86 and 87 series anti-exposure coveralls.

1. Select wrist seal from Table 5-22 and forward OTS-600 to I level for removal and replacement in accordance with paragraph 5-76 ensuring that the wrist seal seam is on the outside (the taped side) of the OTS-600.

5-242. REPLACEMENT OF ANTI-EXPOSURE SOCKS.

CAUTION

Anti-exposure sock replacement is accomplished with the seam tape on the outside of the garment not the inside like the 62, 86 and 87 series anti-exposure coveralls.

1. Select sock from Table 5-23 and forward OTS-600 to I level for removal and replacement in accordance with paragraph 5-74 ensuring that the anti-exposure sock seam tape is on the outside (the taped side) of the OTS-600.

5-243. REPAIR OF SLIDE FASTENERS. Repair slide fasteners in accordance with paragraph 5-64.

5-244. REPLACEMENT OF SLIDE FASTENERS. Slide fastener replacement shall be in accordance with paragraph 5-65 using slide fastener lengths in Table 5-24.

Table 5-24. Lengths of Slide Fastener

Suit Size	Slide Fastener Length
XS-S, SR, MR	32”
ST, MT, LR	34”
LT, XLR, XLT, XLXT, XXLR, XXXLR	35 1/2”
XXXLXT	37”
ALL SIZES, RELIEF	10”

5-245. REPLACEMENT OF SLIDE FASTENER T-PULLS. Replace with fabricated thong in accordance with paragraph 5-65.

5-246. REPAIR OF FABRIC BODY. Repair body fabric in accordance with paragraph 5-61. All repairs to the OTS-600 shall be to the outside of the coveralls. Repairs will be made using fabric from the same fabric material used on the CWU-62/P series coveralls. Although the fabric of the OTS-600 and CWU-62/P are not the same, they are compatible for repairs. Document in accordance with COMNAVAIRFORINST 4790.2.

NOTE

Authorization is granted to O-Level to stitch wrist and neck seals and socks onto the OTS-600 provided heat-sealing and leakage tests are performed at I-Level.

Table 5-25. Parts List

Nomenclature Remark	Part Number	Cost/UI	Remarks
Neck Seals	SP601LNC	$61.52 EA.	Note 1
Wrist Seals	SP601NWC	$71.26 PR.	Note 1
Entry Zipper	SP601MAINZIP	$80.03 EA.	Note 1
Relief Zipper	SP601-ZIP	$45.34 EA.	Note 1
Socks	SP601SOCK	$112.59 EA.	Note 1
Zipper Lubricant	R1351	$2.20 EA.	Notes 1, 2, 4
Repair Kit	PRP001	$41.19 EA.	Notes 1, 2, 3

Notes:
1. Available from Aerostar Inc. paragraph 5-193.
2. Any silicone-based lubricant may be used, ie. McNett Corporation’s zip care, 2 oz. for approximately $2.20 ea., GSA Contract GS-07F-5815R.
3. Repair kit contains sixteen 4-inch long strips of 1 1/4-inch wide, AOF101 stretch seam tape and one 0.3 oz. tube of silicone lubricant #R1351. However, see Note 2 and 4.
4. Seam tape used to repair CWU-62 Series coveralls is compatible.

Section 5-5. Aviation Rescue Swimmer's Drysuit (ARSD), MSD560 and MSD565

5-247. GENERAL.

5-248. Aviation Rescue Swimmer's Drysuit (ARSD) is a commercial off-the-shelf (COTS) open purchase garment used as an outer garment with approved un-derwear and liners worn underneath (see Chapter 3 for approved undergarments). The Mustang MSD560 Search and Rescue (SAR) Swimmer's Drysuit (Figure 5-46) differs from the MSD565 (Figure 5-47) only in that reflective tape was added to the arms of the MSD565 and the MSD565 comes in 4 sizes instead of just one. All ARSDs shall be maintained in accordance with this section.

5-249. PROCUREMENT.

5-250. The ARSD is manufactured at this time by Mustang Survival Manufacturing, Inc. The MSD560 is no longer available for purchase. The MSD565 is procured in four sizes from either Mustang Survival directly (address below) or via the supply system (NIINs in Table 5-27).

Mustang Survival USA
3870 Mustang Way
Bellingham, WA 98226
Phone: 1-800-526-0532
Fax: 360-676-5014
Email: mustangusa@mustangsurvival.com

5-251. All references to the ARSD shall be Work Unit Code (WUC) 96A3F.

5-252. Warranty information is available in accordance with paragraph 5-268.

5-253. Repair services are available for the ARSD from commercial sources in accordance with paragraph 5-293 and Table 5-28.

5-254. Replacement parts are available in accordance with paragraph 5-297 and Table 5-28.

5-255. CONFIGURATION.

5-256. The ARSD was designed to meet requirements for in-water rescue operations for SAR Swimmers. The ARSD is composed of a nylon Gortex laminate that prevents water from leaking in, but allows sweat vapor to evaporate and alleviate heat stress and moisture buildup. The ARSD has latex neck and wrist seals, which stretch to fit each of the four sizes - Small, Medium, Large and Extra Large and come with internal suspenders that adjust to accommodate a range of sizes. The ARSD comes with one-size-fits-all anti-exposure socks factory installed see Table 5-26 and paragraph 5-270. To expel air trapped in the ARSD, the ARSD is equipped with a self-burping exhaust valve on the top of the lower right arm of the ARSD. To assist in locating the rescue swimmer, the ARSD has reflective tape from the shoulder to the upper arm. To provide durability during helicopter aircrew operations, the ARSD has cushioning in the knee, chest, and underside of the forearm. Abrasion protection is provided at the underside of the arm, top of the boot to the knee, seat area, upper thigh, shoulders and lower leg behind the knee.

5-257. APPLICATION.

5-258. The ARSD is worn by aviation rescue swimmers for rescue operations in accordance with NWP 3-50.1.

5-259. SIZING.

5-260. The ARSD shall be properly sized to the aircrewmember based on the height and chest measurements shown in Table 5-27. Take measurements using the procedures in Chapter 10 with aircrewmember wearing the correct size underwear with liner.

Table 5-26. ARSD Directives

Modification Description	Application	Modification Code
Check for proper installation of Exhaust Valve	All ARSDs MSD560 and MSD565.	67-1003

Table 5-27. Sizing Guide for ARSD

Size	Height	Chest	NIIN
Small	62 - 65	36 - 38	01-499-3351
Medium	66 - 69	39 - 42	01-499-3353
Large	70 - 73	43 - 46	01-499-3354
X-Large	74 - 76	47 - 50	01-499-3357

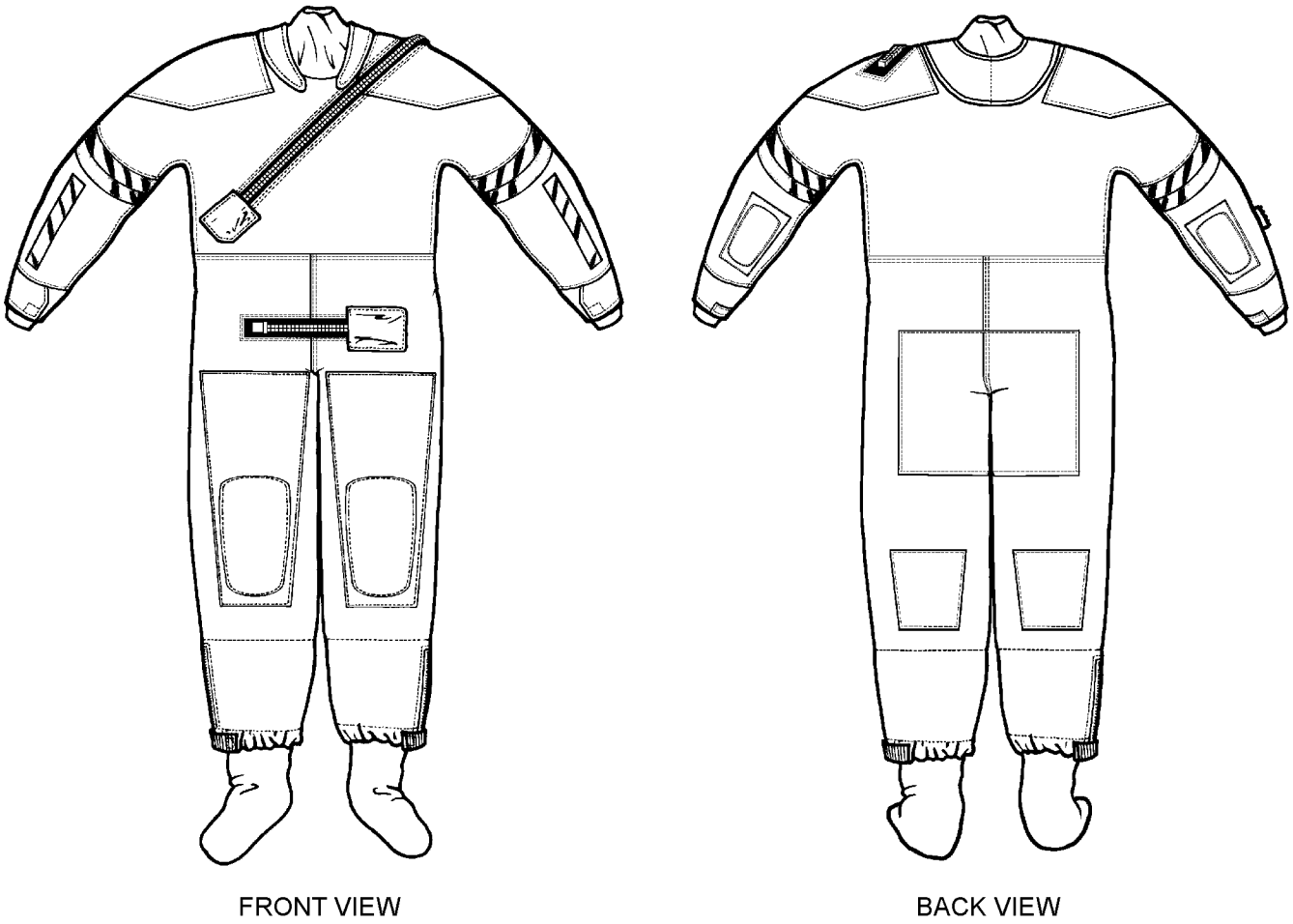

005030a

Figure 5-46. Aviation Rescue Swimmer's Drysuit (ARSD) MSD560

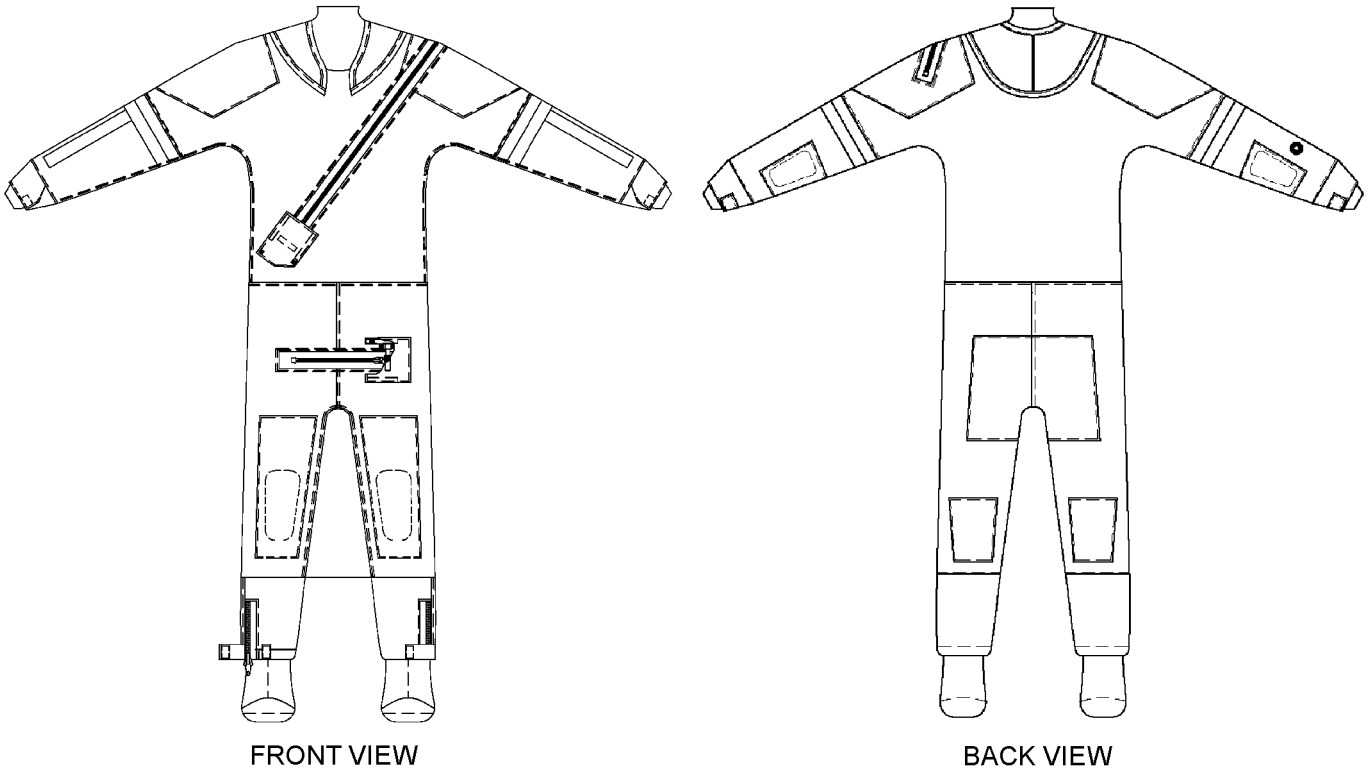

005030b1

Figure 5-47. Aviation Rescue Swimmer's Drysuit (ARSD) MSD565 (Sheet 1 of 2)

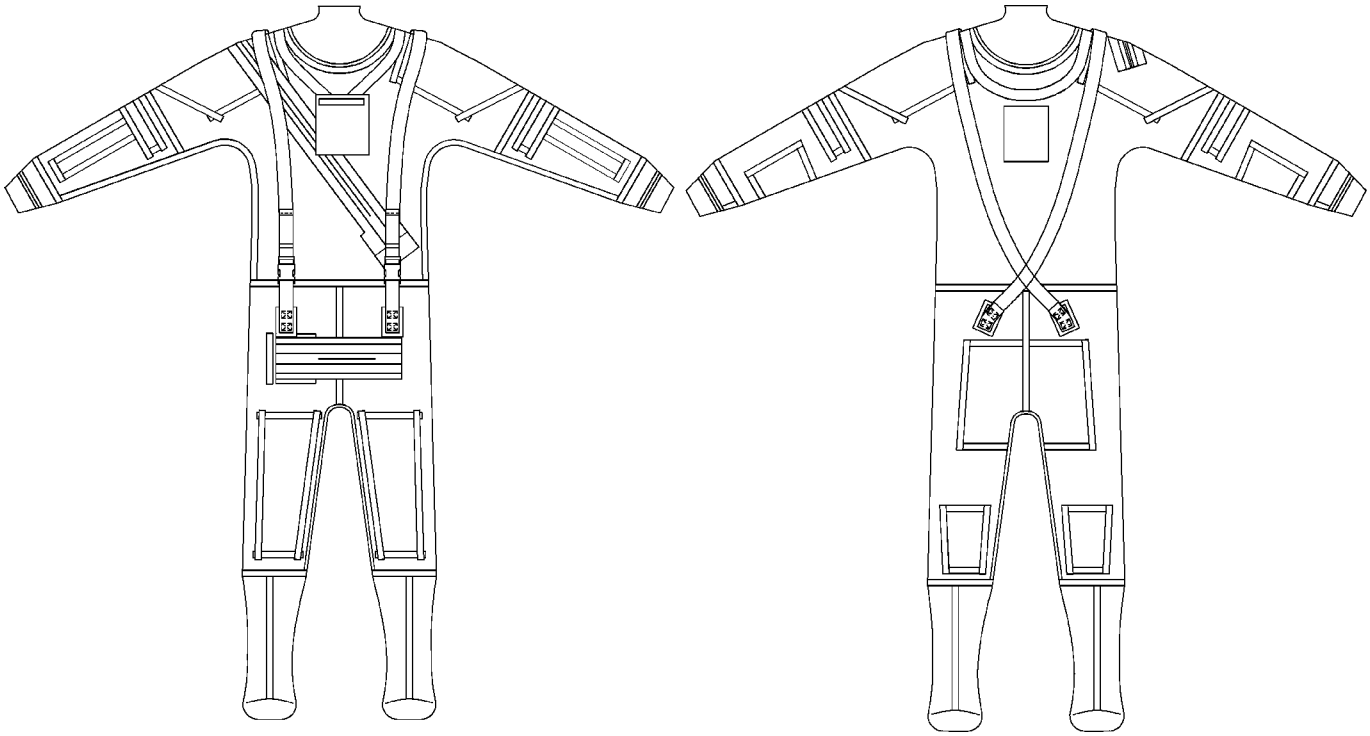

INSIDE-OUT FRONT VIEW

INSIDE-OUT BACK VIEW

005030b2

Figure 5-47. Aviation Rescue Swimmer's Drysuit (ARSD) MSD565 (Sheet 2)

5-261. FITTING.

5-262. ARSD NECK AND WRIST SEALS. The ARSD Neck Seals and Wrist Seals may be trimmed at the initial fitting, but the seals tend to adjust to the wearer after a short period of time. If no excessive seal restriction exists, and seal fit is acceptable to the aircrewmember, the seals should be left as issued. Neck seals shall fit snugly and remain in direct contact with the neck through all normal head movements. Wrist seals shall fit tightly enough to prevent water entry, but not tight enough to restrict blood flow. If seal sizing is required, proceed as follows:

CAUTION

Trim neck seals with extreme caution. A smooth trim line is essential. Excessive or careless trimming could result in loose seals that leak and necessitate expensive replacement at Mustang or Concorde repair facilities. Avoid nicking seal fabric, as this could result in tearing seal when donning and doffing, and also could result in skin irritation.

1. If neck seal trimming is necessary, mark a line around circumference of neck opening. Trimming increments shall not exceed 1/4 inch at a time.

2. Carefully cut along this line with a sharp pair of scissors.

3. Trim wrist seals in same manner as neck seals, except trimming increments shall not exceed 1/8 inch at a time.

4. After trimming seals, have aircrewmember don ARSD to determine seal restriction and water-sealing characteristics. Make any adjustments in accordance with steps 1 through 3.

5-263. ARSD ANTI-EXPOSURE SOCKS. The ARSD comes from the manufacturer with a pair of one-size-fits-all anti-exposure socks attached. One-size-fits-all socks are expected to fit the most common range of sizes. However, if the aircrewmember being fitted finds the socks either too large or too small, the socks can be removed and replaced in accordance with paragraph 5-301.

5-264. DONNING.

5-265. Donning of the ARSD shall be in accordance with paragraph 5-39. Internal suspenders are adjusted to the individual aircrewmember wearing the suit.

5-266. DOFFING.

5-267. Doffing of the ARSD shall be in accordance with paragraph 5-41.

5-268. WARRANTY INFORMATION.

5-269. Mustang Survival warrants Mustang products to be free from defects in materials and workmanship for one year (12 months) from date of manufacture. Mustang Survival will arrange for shipping defective product back to its factory for repair or replacement and will prepay shipping to have the product returned to the end user. Contact Mustang for any questions about the warranty or to arrange a return at 1-800-526-0532. Mustang will issue a Product Return Authorization upon notification. Contact Mustang for any questions about the warranty or to arrange a return. See paragraph 5-294 for contact information.

5-270. MODIFICATIONS.

5-271. The ARSD shall be updated by comparing the configuration of the assembly with the directives listed in Table 5-26.

5-272. MAINTENANCE.

NOTE

Quality Assurance (QA) inspection requirements are included in inspection, repair, and replacement procedures. When a procedure is underlined, an authorized QA representative shall verify that the procedure was correctly accomplished before the next step can be performed.

5-273. Repair and replacement functions for the ARSD will be accomplished at the Organizational (O-level) and Intermediate (I-level) level or above. Maintenance of the ARSD consists of inspection, cleaning, repair and replacement. All maintenance actions shall be documented in accordance with COMNAVAIRFORINST 4790.2. In addition, a damage chart shall be maintained for ARSD. The damage chart is intended as an aid to O-Level maintenance technicians

in describing needed repairs by I-level personnel. I-level technicians shall use the damage chart as an aid during inspection.

NOTE

ARSD and applicable Undergarments shall be inspected in the same manner as the A/P22P-6 Series assemblies.

5-274. MAINTENANCE DOCUMENTS. Documents used to record history and maintenance information consist of those documents described in Chapter 2 of this manual and the CWU-62/P series coveralls damage chart (Figure 5-9, Figure 5-10 and 5-12A). The damage chart is also intended to aid the organizational level custodians of the coverall in describing other needed repairs to the I-level technicians. It shall be used by the I-level personnel as an aid during inspections. All maintenance actions and inspections shall be documented in accordance with COMNAVAIRFORINST 4790.2.

5-275. SERVICE LIFE. ARSD shall remain in service until beyond economical authorized repair.

5-276. INSPECTION.

5-277. PREFLIGHT INSPECTION. The Preflight Inspection shall be performed by the aircrewmember to whom the ARSD is issued prior to each flight. To perform the inspection, proceed as follows:

1. Slide fasteners for proper functioning.

2. Seams for loose tape, separation, cuts and tears.

3. Neck and wrist seals for damage and proper bonding to the ARSD.

4. Socks for proper attachment to ARSD.

5. Assembly for cuts, tears, abrasions and deterioration.

6. Exhaust valve for tightness and overall condition. Ensure blue flange is visible through the 8 black cap circular vents.

7. Reflective tape for loose or separated tape.

8. Internal suspenders for condition and wear.

5-278. POSTFLIGHT INSPECTION. To perform the Postflight Inspection, perform a Preflight Inspection in accordance with paragraph 5-277 and then proceed as follows:

1. Hang ARSD inside out on a wooden or heavy-duty plastic hanger.

2. Allow ARSD to air-dry in a cool, dry, well-ventilated area.

5-279. PLACE-IN-SERVICE INSPECTION. Prior to initial issue of the ARSD to the aircrewmember or when re-issuing after Repair Return from repair facility or when removing from Long Term Storage, a Place-In-Service Inspection shall be completed. The Place-In-Service Inspection is at times an exclusively O-level function and at other times the Place-In-Service Inspection is a joint O-level and I-level effort. The differences are outlined below. To perform the Place-In-Service Inspection, proceed as follows:

5-280. Initial Issue Place-In-Service Inspection.

Materials Required

Quantity	Description	Reference Number
1	Laundry Marking Ink	NIIN 00-161-4229

1. O-Level shall:

a. Size/fit ARSD in accordance with paragraphs 5-259 and 5-261.

b. Perform 180-Day in accordance with paragraph 5-283.

c. Clearly print the Aircrewmembers last name and initials inside the ARSD near the manufacturer's label using Laundry Marking Ink, or indelible ink only.

d. If discrepancies are found during any point in the Place-In-Service Inspections, see Warranty Information in paragraph 5-268 before attempting any repairs. If warranty has gone beyond its expiration date and no longer applies or the repair needed is beyond the scope of the warranty, perform repairs in accordance with paragraph 5-293 and leak check in accordance with paragraph 5-285.

e. Document Place-In-Service in accordance with COMNAVAIRFORINST 4790.2. Attach factory certification directly to the OPNAV 4790/159 CARD and place in aircrewmembers personal Aircrew Flight Equipment Record as a permanent part of his historical records.

5-281. Place-In-Service Inspection for Repair Re- turn of ARSD from Factory Repair Facility (Mustang or Concorde).

1. O-level shall:

a. Perform 180-Day Inspection in accordance with paragraph 5-283 except for step k (leak check). If no discrepancies are found during the 180-Day Inspection, and if the factory certification of the RFI status of the ARSD is present, then issue the ARSD directly back to the aircrewmember without leak checking the ARSD. The ARSD was leaked checked at the repair facility during the repair procedures and there is no need to repeat the leak test if no discrepancies are noted during the 180-Day Inspection.

NOTE

If production facility re-certification documenting the repair and leak test does not accompany the ARSD, then the ARSD must be leak checked in accordance with paragraph 5-285 before returning to aircrewmember.

b. If discrepancies are found during any point in the Place-In-Service Inspections, see Warranty Information in paragraph 5-268 before attempting any repairs. If warranty has gone beyond its expiration date and no longer applies, or the repair needed is beyond the scope of the warranty, perform repairs in accordance with applicable paragraphs.

c. Document new Place-In-Service in accordance with COMNAVAIRFORINST 4790.2. Attach factory re-certification directly to the OPNAV 4790/138 card and place in aircrewmember's personal Aircrew Flight Equipment Record as a permanent part of his historical records.

5-282. PLACE-IN-SERVICE INSPECTION FOR REMOVAL FROM LONG TERM STORAGE.

1. O-Level shall:

a. Have aircrewmember don the ARSD to ensure the ARSD still fits properly in accordance with paragraph 5-261.

b. Perform all the steps of the 180-Day Special Inspection in accordance with paragraph 5-283.

c. Forward the ARSD to I-level for leakage test.

2. I-Level shall:

a. Perform leak check in accordance with paragraph 5-285.

b. Document new Place-In-Service in accordance with COMNAVAIRFORINST 4790.2.

5-283. 180-DAY SPECIAL INSPECTION. The 180-Day Special Inspection shall be performed at the O-level, on all in-service ARSD series assemblies upon Place-In-Service and every 180/360 days thereafter. To perform the 180-Day Inspection, proceed as follows:

Materials Required

Quantity	Description	Reference Number
As Required	Lubricant Stick	Zipperease NIIN 00-999-7548

1. If required, clean assembly components in accordance with paragraph 5-291.

2. Inspect as follows:

a. Place ARSD on a flat, clean surface.

b. Inspect surface of ARSD, wrist seals, neck seals, socks, and reflective tape for damaged fabric, holes and loose or broken stitching.

c. Inspect slide fasteners for damaged chain, loose/missing teeth and stops, improper chain alignment, damaged or split end seal blocks, damaged or mission pull tabs (metal and fabric), and loose/frayed slide fastener tape.

WARNING

If blue flange is not visible through the top cap, then the blue flange is either missing or the valve has been installed backwards. See paragraph 5-298 for information on the exhaust valve.

d. Inspect exhaust valve, located on the right sleeve just below the elbow, for tight fit, condition of valve plastic and visibility of blue flange through the black cap 8 circular vent holes. Valve is properly installed if the male portion of the exhaust valve (knurled vented black cap with 8 small top circular vents) is located and visible on the outside of the coverall and the female portion (solid black cap with four vents on the underside stem) is located inside the coverall.

e. Inspect chest pad for damage.

f. Inspect internal suspenders for damaged fabric, holes, loose or broken stitching, damaged or broken buckles, and loose anchor patch.

g. Turn ARSD inside out and repeat steps b and c, and inspect seam tapes for looseness or fraying.

h. Apply a coating of lubricant to slide fasteners using a lubricant stick.

i. Turn ARSD right side out. Inspect slide fastener for proper operation. Inspect overall condition of ARSD.

j. If I-level repairs are necessary, forward ARSD with damage chart (Figure 5-9 or Figure 5-10) detailing discrepancies, to I-level for repair and/or further testing.

k. When 360-Day Inspection is required, forward ARSD to I-level for inspection.

l. Document inspection in accordance with COMNAVAIRFORINST 4790.2.

NOTE

Authorization is granted at O-level to stitch wrist and neck seals and socks onto the ARSD provided heat sealing and water tests are performed at the I-level.

5-284. 360-DAY SPECIAL INSPECTION. The Special 360-Day Inspection is performed jointly by O-level and I-level every 360 days as follows:

1. O-level shall perform all steps of the 180-Day Special Inspection in accordance with paragraph 5-283.

2. I-level shall perform the water leakage test on the ARSD in accordance with paragraph 5-285.

5-285. WATER LEAK TEST.

NOTE

Water shall not leak out of the exhaust valve during the leak check performed in accordance with paragraph 5-56. If the exhaust valve leaks, the valve is bad, not tightened down snug enough, or the valve is installed backward. Replace bad exhaust valves in accordance with paragraph 5-298.

1. Before turning the ARSD inside out for the leak test, visually check that the exhaust valve is installed properly with the male portion of the valve on the outside of the ARSD and the female portion on the inside of the ARSD.

2. Perform leak test in accordance with paragraph 5-56. When the ARSD is turned inside out for the leak test, the male portion of the exhaust valve will now be situated on the inside of the ARSD for the duration of the leak test. There is no need to disassemble the valve during the leak test; the male portion will automatically be in the correct position for the test after the suit is turned inside out.

5-286. STORAGE.

CAUTION

The coveralls should be stored in a cool, dark place as prolonged exposure to the sun's ultra-violet rays or other sources of ozone will degrade the adhesives and all types of rubber. Keep coveralls away from gasoline, oil, and other petroleum products as they dissolve adhesives.

Do not insert hanger through neck seal opening when preparing coveralls for short term storage. Ends of hangers could puncture and damage the neck seal. Insert hanger through entry zipper and push hanger head from below through the neck seal opening.

5-287. SHORT TERM STORAGE. Between flights, ARSD shall be hung on a heavy-duty plastic or wooden hanger or folded in accordance with Figure 5-14, and stored in a clean, well-ventilated, protected area.

5-288. SEASONAL STORAGE. Seasonal storage is storage during the warmer months when anti-exposure protection is not required for flight. ARSD in Seasonal Storage shall be maintained on its normal 180/360-day inspection cycles and do not require a new place in service inspection upon removal from seasonal storage. Seasonal Storage does not require documentation as "Seasonal Storage".

5-289. LONG TERM STORAGE. ARSDs being stored, rather than being maintained on a 180/360-day inspection cycle, (for whatever reason) shall be considered in Long Term Storage. An ARSD that has gone beyond either its 180-Day or 360-Day Inspection shall be considered out of service and in Long Term Storage and must be documented as such. ARSDs being removed from Long Term Storage shall have a Place-In-Service Inspection completed and documented. To place the ARSD in Short or Long Term Storage, proceed as follows:

CAUTION

ARSD should be stored in a cool, dark place as prolonged exposure to the sun's ultra-violet rays or other sources of ozone will degrade the adhesives and all types of rubber products (latex, neoprene). Keep ARSD away from gasoline, oil and other petroleum products as petroleum dissolves the cement.

1. Ensure that ARSDs are clean and completely dry.

2. Lubricate slide fasteners. Slide fasteners shall remain completely open during storage.

3. Fold ARSDs in accordance with Figure 5-14. Place ARSDs in individual plastic bag and clearly label with aircrewmember's name.

4. Loosely pack bagged ARSDs in storage bins, cruise boxes or other appropriate storage containers.

5. Store closed containers in a cool, dry area.

5-290. CLEANING.

5-291. Clean in accordance with paragraph 5-59.

5-292. REPAIRS AND FABRICATIONS.

5-293. Instructions for performing repairs, replacement or fabrications of the assembly shall be limited to those listed in Table 5-7, Table 5-28 and Table 5-29 and paragraphs 5-292 thru 5-315. All repairs shall be verified RFI with the leakage test in accordance with paragraph 5-285 after repairs.

5-294. ARSDs are purchased with a warranty as outlined in paragraph 5-268. Before attempting any repairs of the ARSD, check its warranty. All ARSD repairs being performed at commercial repair facilities shall be reported to NAVAIR Fleet Support Team (FST) via Naval Message. Send message reporting a) Repairs completed and b) final cost of the repairs to COMNAVAIRWARCENACDIV PATUXENT RIVER MD//4.6.8.3//. The cost of repairs shall not exceed 50% of cost of ARSD. The only repair facility authorized to do repairs on the ARSD is: Mustang Survival Mfg. Inc., Fleet activities must call customer service at 1-800-526-0532 to speak to a Mustang representative, receive a repair authorization number and shipping information.

5-295. Commercial repair services are listed in Table 5-28. At this time, the neck seal shall be replaced at a commercial repair facility in accordance with paragraph 5-299. All other repairs can be accomplished in accordance with this section by O- and I-level aircrew survival equipmentmen. The services listed are provided for extreme circumstances such as no I-level support, material shortages (e.g. slide fasteners), etc. Table 5-28 lists repairs and a cost range of repairs available from the commercial repair facility.

5-296. The repair facility requires a Base Inspection be accomplished upon receipt/return of the ARSD in order to warranty the repair. The Base Inspection is not accomplished as part of the repair, but is a separate cost that must be factored into the decision about the most cost effective way to deal with repairs/replacement of the ARSD. The inspection covers an initial leak test upon receipt to establish the condition of the ARSD, a second test to confirm all repairs were completed properly, and a certification that the ARSD is free of leaks prior to leaving the facility. Any leaks found in the ARSD will be repaired at a cost to be determined by the repair facility depending on the extent of the repairs involved.

NOTE

ARSDs sent for factory repairs shall be removed from service first and have a Place-In-Service Inspection upon return. Document both actions in accordance with COMNAVAIRFORINST 4790.2.

5-297. Table 5-29 lists ARSD replacement parts, which are available from Mustang Survival.

5-298. REMOVAL AND REPLACEMENT OF EXHAUST VALVE. The exhaust valve is a one-way check valve that allows air inside the ARSD to be vented out while preventing water entry when swimmer is in the water. The exhaust valves are designed to be easily replaceable.

NOTE

The exhaust valve is comprised of four (4) major pieces: (1) A knurled black cap with 8 small top circular vents (blue flange visible through the 8 holes) with a threaded stem on the underside (male portion) (2) A solid black cap with four vents on the underside stem (female portion) (3) Rubber gasket and (4) Rubber gasket (rubber gaskets are identical and interchangeable). Number (1) above, the male portion of the exhaust valve can be further broken down into (1) cap piece (knurled black cap with 8 circular vent holes) (2) Blue flange (3) Threaded stem assembly that the blue flange attaches to and sits in. When removing and replacing the exhaust valve, if the cap piece and the threaded stem assembly becomes separated, simply twist cap piece clockwise onto the threaded stem and tighten until snug; do not over tighten and do not remove the blue flange.

1. To remove the exhaust valve, proceed as follows:

a. Locate the exhaust valve on the right sleeve just below the elbow.

CAUTION

Process of removing exhaust valve is untwisting and removing by hand. However, if non-RFI valve is hard to remove by hand use large pliers on the male portion to remove the valve. Thread damage as a result of removal is not a concern because the valve is to be discarded. Be sure not to pinch and damage the fabric of the ARSD during the process.

b. To access the underside of the exhaust valve, open and enter the ARSD through the front entry slide fastener. Insert hand down though the right sleeve and firmly grasp and hold the female portion of the exhaust valve.

c. Grasp the male portion of the exhaust valve and twist counter-clockwise until valve is loosened enough to remove.

d. Once the exhaust valve is completely removed from the sleeve of the ARSD, discard all 4 pieces.

2. To install new exhaust valve, proceed as follows:

NOTE

The exhaust valve is installed properly if the male portion of the valve is visible on the outside of the ARSD. The solid black cap with four vents on the underside stem is the female portion of the valve and is located on the inside of the ARSD.

a. Twist apart new valve keeping one rubber gasket with the outer male portion and one with the inside female portion.

b. Enter ARSD through the front entry slide fastener and down through the right sleeve. Place the female portion (solid cap) and rubber gasket on the inside of the ARSD so that the rubber gasket is layered between the garments' fabric and the cap. Center the assembly in the hole of the sleeve.

CAUTION

Over tightening may cause damage to the exhaust valve threads. When installing, hand tighten with enough force to ensure a proper seal, but not so much that the valve is damaged.

c. Place remaining rubber gasket over the front side of the sleeve hole. While holding bottom cap firmly, twist the male portion clockwise until hand tight. Use enough force to ensure a proper seal, but not so much that the valve threads are damaged.

3. Perform leak check in accordance with paragraph 5-285.

4. Document maintenance action in accordance with COMNAVAIRFORINST 4790.2.

5-299. REPLACEMENT OF NECK SEAL. Replacement of the neck seal can only be accomplished by an authorized repair facility. See Table 5-28 for more information.

5-300. REPLACEMENT OF WRIST SEALS. Wrist seals can be replaced with the wrist seals found in Table 5-9. Select and install correct wrist seal in accordance with paragraph 5-76 as a guide.

NOTE

O-level is authorized to stitch wrist seals and socks onto the ARSD provided heat sealing and water tests are performed at I-level.

5-301. REPLACEMENT OF ANTI-EXPOSURE SOCKS. Anti-exposure socks can be replaced with the one-size- fits-all black socks listed in Table 5-29 or the CWU-75/P socks found in Table 5-6. Both types of socks shall be replaced in accordance with paragraph 5-74. The CWU-75/P comes in 13 sizes and shall be fitted in accordance with paragraph 5-33.

5-302. REPAIR OF SLIDE FASTENERS. Repair slide fasteners in accordance with paragraph 5-64.

5-303. REPLACEMENT OF SLIDE FASTENERS. Slide fastener replacement shall be in accordance with paragraph 5-65 using slide fasteners in Table 5-29.

NOTE

Measure chest slide fastener to determine appropriate length (24 to 32 inches depending on the size of the ARSD being repaired). Length is measured from zip stop to zip stop (length of teeth).

5-304. Slide fasteners, part number 110-1731, can be open purchased from OEB Inc. State the length of the slide fastener you need, 8 inches for the relief portal slide fastener and from 24 to 32 inches on the entry slide fastener depending on the size of the ARSD. See Table 5-29 for more information.

5-305. REPLACEMENT OF LOOSE OR MISSING HOOK AND PILE TAPE.

5-306. Replacement of loose hook and pile tape on the wrist and ankle closures as well as the zipper toggle securing flap shall be accomplished using standard sewing procedures.

5-307. Replacement of pile tape located directly on the ARSD to hold the zipper toggle securing flap against the body of the ARSD breaks the integrity of the suit and shall be accomplished as follows:

1. Remove damaged hook tape from ARSD, being careful not to damage ARSD fabric.

2. Cut correct length of hook fastener tape. Position hook tape on ARSD, using original stitching lines as a guide. Attach hook tape to ARSD with a single row of stitching, 1/8-inch from edge on all sides.

3. On inside of ARSD, apply seam tape over stitching lines in accordance with paragraph 5-68.

4. Leak test in accordance with paragraph 5-285.

5. Document in accordance with COMNAVAIRFORINST 4790.2.

5-308. REPLACEMENT OF SLIDE FASTENER TOGGLE PULLS. Obtain toggle pull from Mustang as listed in Table 5-29 or replace with fabricated thong in accordance with paragraph 5-65.

5-309. REPLACEMENT OF LOOSE OR MISSING REFLECTIVE TAPE. Use standard cementing procedures to replace or reattach loose or missing reflective tape. NIIN for the 3M 8910 Reflective Tape is 00-481-3424.

5-310. REPAIR OF FABRIC BODY. Repair fabric body in accordance with paragraph 5-61 and paragraph 5-89 and Table 5-7. Repairs will be made from the same material as used on the CWU-62/P Series coveralls. Although the materials of the ARSD and the CWU-62/P are not the same they are compatible and since patches are applied on the inside of the ARSD the matching colors is not important.

5-311. REPAIR OF INTERNAL SUSPENDERS. Repair internal suspender by replacing worn/damaged elastic and plastic buckles.

NOTE

When replacing worn/damaged the elastic, do not remove the anchored patch piece that attaches the suspenders to the ARSD. If anchored patch becomes loose or damaged, replace in accordance with paragraph 5-313 or 5-314.

5-312. REPLACEMENT OF INTERNAL SUSPENDER ELASTIC. To replace internal suspender elastic, proceed as follows:

1. Mark and cut new piece of replacement elastic adding 2 inches to the length needed for a box stitch on either end of the repair. See Table 5-29 for information on the type of elastic to use in the repair.

2. Remove worn or broken elastic by cutting elastic just below the point of wear/damage. Attach new replacement piece to old elastic, overlapping 1 inch.

3. Stitch the two pieces together with a 3/4 inch box stitch.

4. Perform leak check in accordance with paragraph 5-285.

5. Document maintenance action in accordance with COMNAVAIRFORINST 4790.2.

5-313. REPAIR OF INTERNAL SUSPENDERS ANCHOR PATCH. Use standard cementing procedures to repair loose internal suspenders anchor patch.

5-314. REPLACEMENT OF INTERNAL SUSPENDERS ANCHOR PATCH. Internal suspenders are anchored inside the ARSD with a patch cemented directly on to the fabric of the ARSD (it is not sewn on). Internal suspenders are sewn to the patch and then the patch is cemented to the fabric of the ARSD. Replace internal suspenders anchor patch as follows:

1. Carefully remove suspender elastic from the anchor patch.

2. Measure and cut a 4-inch long by 2-1/2 inch wide anchor patch from polyurethane coated cloth (Table 5-29).

3. Sew the elastic of the internal suspenders to anchor patch with two separate box stitches using the original anchor patch and suspenders as a guide for placement of the elastic on the new anchor patch.

4. Attach anchor patch to ARSD in the same spot that the anchor patch was previously attached. Use standard cementing techniques to apply new patch to the inside of the ARSD.

5. Perform leak check in accordance with paragraph 5-285.

6. Document maintenance action in accordance with COMNAVAIRFORINST 4790.2.

5-315. REPLACEMENT OF DAMAGED BUCKLE. To remove and replace a damaged buckle, use standard sewing techniques. See Table 5-29 for more information on the buckle.

Table 5-28. Repair Facility Services and Costs

ARSD (Note 1)		Mustang (Note 2)		
	Where is repair accomplished?	Repair?	Price (Notes 3 and 4)	Parts/Labor
Base Inspection (Note 6)	Commercial repair facility only	Yes	$70	Labor
Final Processing Inspection	Commercial repair facility only	No	—	—
Neck Seal Replacement	Commercial repair facility only	Yes	$77	Both
Wrist Seal	In accordance with paragraph 5-300 or at commercial repair facility	Yes	$35	Both
Wrist Seal (2)	In accordance with paragraph 5-300 or at commercial repair facility	Yes	$68	Both
Sock	In accordance with paragraph 5-301 or at commercial repair facility	Yes	$55	Both
Sock (2)	In accordance with paragraph 5-301 or at commercial repair facility	Yes	$110	Both

Table 5-28. Repair Facility Services and Costs (Continued)

ARSD (Note 1)		Mustang (Note 2)		
	Where is repair accomplished?	Repair?	Price (Notes 3 and 4)	Parts/Labor
Entry Zipper Replacement	In accordance with paragraph 5-303 or at commercial repair facility	Yes	$190	Both
Relief Zipper Replacement	In accordance with paragraph 5-303 or at commercial repair facility	Yes	$108	Both
Tear/Hole (Jagged, less than 3″)	In accordance with paragraph 5-310 or at commercial repair facility	Yes	$55	Both
Tear (Straight, less than 4″)	In accordance with paragraph 5-310 or at commercial repair facility	Yes	$13	Both
Pinholes (up to 3)	In accordance with paragraph 5-310 or at commercial repair facility	Yes	$21	Both

Notes:
1. Before any repairs are conducted on the ARSD, see the Warranty Information in paragraph 5-268 to see if the original warranty from Mustang will cover the cost of the repair. Repairs done at both facilities are warranted; make sure to keep all original paperwork with the ARSD History Card to ensure proof of repair so that the warranty will be honored if the repair works should fail during the warranty period. Contact Mustang Survival at 1-800-526-0532 to obtain a repair/return authorization number and shipping information before sending any coveralls to the repair facility.
2. Repair prices do not include freight charges.
3. All prices are approximate as of the publishing date of this section, and will change over time.
4. Mustang will contact requesting activity if needed repairs are beyond the scope of the initial repair requested. Activities must give repair facilities a current and easily accessible POC for decisions authorizing or rejecting the repairs involved and the prices quoted.
5. A Base Inspection is required for the ARSD to be certified as leak free when the ARSD leaves the factory. ARSDs that have the Base Inspection done will have a written re-certification accompany the ARSD when returned. Original, and re-certifications must be kept in the aircrewmember's personal Aircrew Flight Equipment Records as a permanent part of his historical file.
6. Parts are not included; activity must send sock/socks with ARSD for repair.

Table 5-29. Parts List

Nomenclature	Part Number/NIIN	Cost	Contact Information
Sock	MA8831	$31	Mustang Survival - 304-275-3306
Chest Pad	MA8832	$8	Mustang Survival - 304-275-3306
Red Toggle	HD7711	$1	Mustang Survival - 304-275-3306
Exhaust Valve	HD7017	$28	Mustang Survival - 304-275-3306
Entry Slide Fastener, Size 24 (Notes 1 and 2)	110-1731-24	$87.11	(Note 3)
Entry Slide Fastener, Size 26 (Notes 1 and 2)	110-1731-26	$89.23	(Note 3)
Entry Slide Fastener, Size 28 (Notes 1 and 2)	110-1731-28	$91.35	(Note 3)
Entry Slide Fastener, Size 30 (Notes 1 and 2)	110-1731-30	$93.68	(Note 3)
Entry Slide Fastener, Size 32 (Notes 1 and 2)	110-1731-32	$96.02	(Note 3)
Relief Slide Fastener, Size 8 (Notes 1 and 2)	110-1731-8	$68.03	(Note 3)
Side Release Buckle	None (Note 4)	Varies	YKK
Reflective Tape	00-481-3424	Varies	Supply System
Internal Suspenders Elastic, Black	None (Note 5)	Varies	—
Internal Suspenders Anchor Patch Material, Cloth, Coated Polyurethane	01-335-3129 or equivalent	Varies	Supply System

Notes:
1. Comes with red pull toggle attached to slide fastener.
2. Length (or size) of the slide fastener is measured from zip stop to zip stop (length of teeth).
3. To open purchase slide fasteners, contact YKK Inc. via Diversified Marketing Group. Please keep in mind that the individual contact person may change from time to time but the basic contact information is consistent and you will be able to open purchase the slide fasteners in Table 5-29 from the contact information provided. Call Julie A. Murray, Diversified Marketing Group, 109 Forrest Avenue, Narberth, PA 19072. Telephone number: 610-667-5589. Fax number: 610-667-4666. Email: Julie@dmgroup.org.
4. 1 1/2 inch Side Release Buckle is made by YKK USA INC and is LBRU UL approved. Buckles are not available directly from the YKK nor are they in the supply system, but they can be found via the internet and in fabric and craft stores. The cost varies greatly from place to place (e.g. $.38 to $15 for one). Do research for the best price. If buckles cannot be obtained locally, contact the NAVAIR Fleet Support Team 13-1-6.7-2 manual manager at 301-342-8379 as limited supplies of buckles are on hand with the clothing team.
5. Elastic used in manufacturing the internal suspenders is 38mm CAM 4192 Black Elastic 100% polyester, woven.

Section 5-6. A/P22P-17 Anti-Exposure Apparel Assembly

5-316. GENERAL.

5-317. The A/P22P-17 Anti-Exposure Apparel Assembly, which is comprised of the CWU-79/P Passenger Anti-Exposure Survival System (PAESS), is designed to provide cold weather/water protection for non-combat equipped passengers. The ensemble will be used on Carrier Onboard Delivery (COD) and Vertical Onboard Delivery (VOD) aircraft on flights over water or where cold climatic conditions could be hazardous or fatal should emergency egress be necessary.

5-318. There are two sources providing the PAESS to the fleet. Four hundred fifty (450) ensembles were fabricated in accordance with Aircrew Systems Change 613 by selected fleet activities and designated CWU-79/P1. One thousand (1000) size 12 CWU-62/P Series Coveralls were modified to CWU-79/P configuration by commercial contract. All reference to the ensemble shall be CWU-79/P Series. When all stocks of the CWU-79/P are depleted and/or CWU-79/P coveralls become overage as per the service life, the CWU-83/P can be used (Section 5-7).

5-319. CONFIGURATION.

5-320. CWU-79/P PASSENGER ANTI-EXPOSURE SURVIVAL SYSTEM (PAESS) (Figure 5-48). The PAESS was designed to meet OPNAV requirements for anti-exposure protection for non-troop, non-aircrew personnel on Carrier Onboard Delivery/Vertical Onboard Delivery (COD/VOD) missions when anti-exposure protection is required for the aircrew. The suit is a modified size 12 CWU-62A/P anti-exposure coverall. It is made of a laminate composed of inner and outer layers of fire-resistant aramid cloth. It is a lightweight coverall that will prevent water from leaking through it from the outside, but which will allow body moisture to pass out, thereby lessening heat and moisture buildup. The CWU-79/P has an attached hood and there are adjustment straps on each side of the torso which will enable the coverall to fit passengers of various sizes. The coverall has wrist seals and a neck seal that are made of gas-expanded neoprene which are adjustable to most sizes. A pocket on the right thigh provides stowage for the HAU-12/P Anti-Exposure Mittens and HGU-32/P Anti-Exposure Hood. CWU-75/P Anti-Exposure Socks are attached as an integral part of the assembly. The PAESS will provide protection from immersion hypothermia when worn over regular winter uniforms or civilian street clothing.

5-321. CWU-75/P ANTI-EXPOSURE SOCKS. Anti-exposure socks made of waterproof, stretchable fabric are attached to the legs of the CWU-79/P coverall.

5-322. PAESS SUPPLEMENTAL COMPONENTS. The HGU-32/P Anti-Exposure Hood (Section 3-37) and HAU-12/P Anti-Exposure Mittens (Section 3-35) are supplemental components of the PAESS system.

NOTE

The anti-exposure hood and mittens may need to be added to the CWU-79/P Series coveralls prior to issue.

5-323. APPLICATION.

5-324. When authorized by the Type Commander, the A/P22P-17 Anti-Exposure Apparel Assembly shall be worn aboard COD/VOD aircraft when anti-exposure protection is required for the aircrew. The A/P22P-17 assembly shall be worn by passengers for flight operations in accordance with the climatic and operational requirements established by the NATOPS General Flight and Operational Instructions Manual OPNAVINST 3710.7 Series.

5-325. MODIFICATIONS.

5-326. There currently are no modifications for the A/P22P-17 Anti-Exposure Apparel Assembly.

5-327. FITTING.

5-328. The CWU-79/P coverall is available in one size only, but it can be adjusted to fit by use of adjustable straps located on either side of the waist area. These straps help to maintain the best possible fit and to reduce bulk. Further, both the neck and wrist seals are adjustable and will minimize water entry when properly tightened.

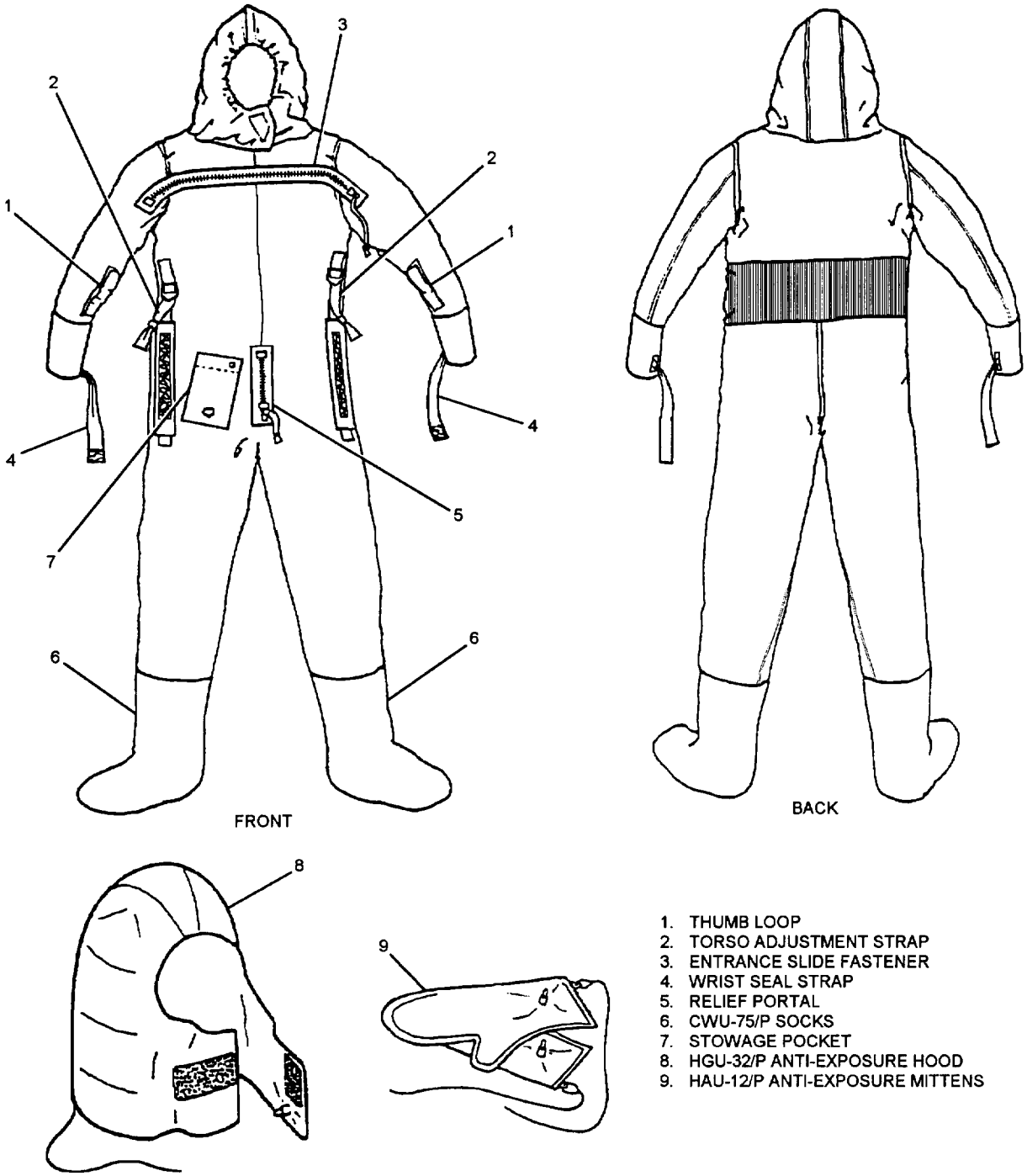

5-4

Figure 5-48. CWU-79/P Passenger Anti-Exposure Survival System (PAESS)

5-329. DONNING.

5-330. Don the A/P22P-17 assembly as follows:

NOTE

The A/P22P-17 is worn over passenger clothing. The anti-exposure hood and mittens are not worn during flight but remain stowed in the coverall thigh pocket.

1. Remove shoes/boots.

2. Don CWU-79/P coverall by first inserting feet into anti-exposure socks, then pull coverall up past waist.

3. Insert arms into sleeves.

4. Grasp upper part of coverall (behind head) and pull neck seal over head. Adjust neck seal so it is comfortable and seam tapes are aligned with shoulders.

5. Release thumb loops from hook and pile fastener tapes on sleeves.

d. Place right loop over right thumb and extend right arm horizontally to side of body. Grasp entrance opening slide fastener with left hand and close fastener to a point past center of chest. Remove right thumb from loop.

e. Place left thumb in left sleeve loop and extend arm horizontally to side of body. Grasp slide fastener pull tab in right hand and completely close entrance slide fastener. Ensure pull tab is firmly seated into seal block and butted against end block.

f. Remove thumb from thumb loop and mate fastener tapes of both loops with fastener tapes on sleeves.

6. Ensure relief portal slide fastener is closed. Ensure pull tab is firmly seated into seal block and butted against end block.

7. Manually vent air from the suit by squatting at the knees and bending forward while pulling the neck seal away from the neck as you squat.

8. If coverall appears baggy, take up excess material by pulling straps located on either side of the torso and secure straps in position using hook and pile fastener.

9. Adjust tightness of wrist seals by using straps on each wrist.

10. Don life preserver and helmet in accordance with aircrewman's instructions.

5-331. DOFFING.

5-332. To doff the A/P22P-17/P assembly carefully proceed as follows:

1. Remove life preserver, hood, and mittens, as applicable.

a. Stow hood and mittens in coverall thigh pocket.

2. Loosen adjustment straps on each side of torso.

3. Loosen wrist seal adjustment straps.

4. Release thumb loops on each sleeve from hook and pile fasteners.

a. Insert left thumb in left loop and extend left arm horizontally to side.

b. Grasp entrance slide fastener pull tab in right hand and open slide fastener past center of chest. Remove left thumb from loop.

c. Insert right thumb in right loop and extend right arm horizontally to side.

d. Grasp entrance slide fastener pull tab in left hand and completely open slide fastener. Remove right thumb from loop.

5. Grasp upper portion of coverall and pull up over head.

6. Pull sleeves inside out while pulling arms from sleeves.

7. Peel coverall down, turning it inside out down below the waist.

8. Remove legs and feet from coverall.

5-333. MAINTENANCE.

5-334. Maintenance of the CWU-79/P consists of inspection, cleaning, repair and replacement. Repair and replacement functions for the CWU-79/P shall be accomplished at the intermediate level or above. All maintenance actions shall be documented in accordance with COMNAVAIRFORINST 4790.2. In addition, a Damage Chart (Figure 5-49) shall be maintained for each CWU-79/P coverall. The damage chart is intended as an aid to organizational maintenance technicians in describing needed repairs by intermediate level personnel. Intermediate level technicians shall use the damage chart as an aid during inspection.

NOTE

Stitching wrist seals, neck seals, and attaching CWU-75/P socks to the CWU-79/P coveralls may be performed at organizational level providing heat sealing and water tests are performed at intermediate level.

Quality Assurance Inspection (QA) requirements are included in inspection, repair, and replacement procedures. When a procedure is underlined, an authorized QA representative shall verify that the procedure was correctly accomplished before the next step can be performed.

5-335. INSPECTION. Inspection requirements of the CWU-79/P Passenger Anti-Exposure Survival System (PAESS) shall include Preflight, Postflight, Place-In- Service, and 360-Day inspections.

5-336. PREFLIGHT INSPECTION. The Preflight Inspection is a visual inspection which shall be performed by an assigned aircrewmember who will inspect and issue a coverall assembly to each passenger prior to each flight as follows:

1. Slide fasteners for proper function and ease of operation.

2. Turn coverall outside in so that blue lining is showing. Seams for loose tape, separation, cuts and tears.

3. Neck and wrist seals for damage and proper bonding to coverall.

4. Socks for attachment to coverall.

5. The overall assembly for cuts, tears, abrasions, and deterioration.

5-337. PERFORM PREFLIGHT INSPECTION. Perform Preflight Inspection in accordance with paragraph 5-336, Preflight Inspection, and as follows:

1. After inspection hang coverall on a wooden or plastic hanger, inside out.

2. Allow to air dry in a cool, dry, well ventilated area.

NOTE

Although there is no requirement for anti-exposure suits to be inspected at certain times of the year, the best maintenance practices for the suits is to time the inspections of the anti-exposure suits so that the 360-Day Inspection is being done as the suit is taken out of seasonal storage in the fall. See paragraph 5-60 for storage requirements and storage clarification.

5-338. PLACE-IN-SERVICE INSPECTION The Place-In- Service Inspection shall be performed prior to placing in service when issued and upon removal from any long term storage. The Place-In-Service Inspection shall be performed in accordance with paragraph 5-339, 360-Day Inspection.

(ORGANIZATIONAL USE)_____DATE_____
ACTIVITY/SQN._____COVERALL SERIAL NO.C.D.I._____
REMARKS:_____
_____

(INTERMEDIATE USE)

INSPECTION/TEST REMARKS:_____
_____
_____
REPAIR REMARKS:_____
_____
REPAIRED BY_____INSPECTOR_____DATE_____

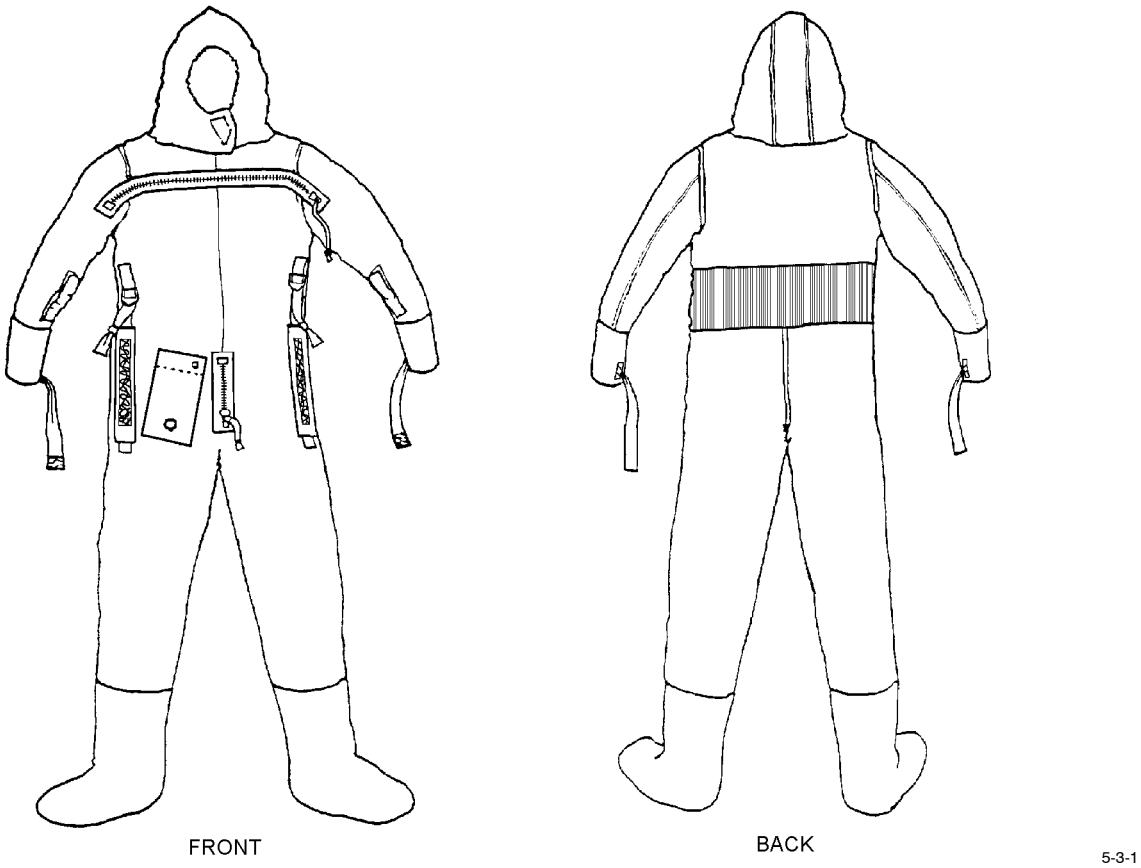

Figure 5-49. CWU-79/P Series PAESS Coverall Damage Chart (Sheet 1 of 2)

(ORGANIZATIONAL USE)_____DATE_____
ACTIVITY/SQN._____COVERALL SERIAL NO. _____ C.D.I._____
REMARKS:_____
_____

(INTERMEDIATE USE)

INSPECTION/TEST REMARKS:_____
_____
_____
REPAIR REMARKS:_____
_____
REPAIRED BY_____INSPECTOR_____DATE_____

COVERALL SHOWN INSIDEOUT

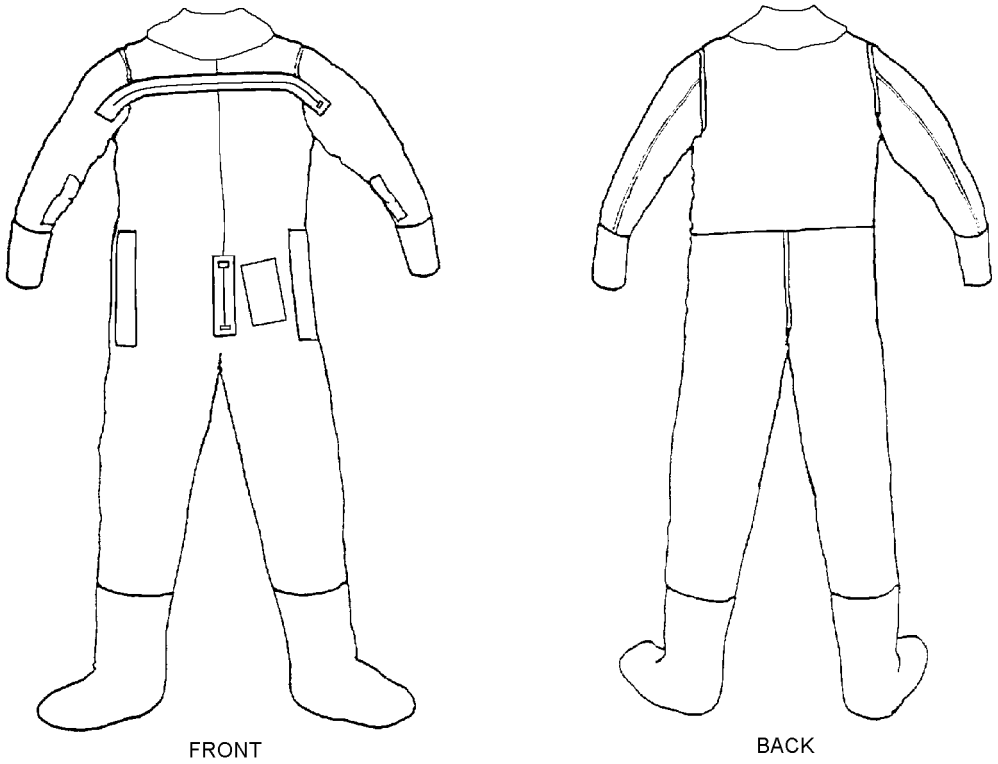

5-3-2

Figure 5-3. CWU-79/P Series PAESS Coverall Damage Chart (Sheet 2 of 2)

5-339. 360-DAY SPECIAL INSPECTION. The 360-Day Inspection shall be performed at intermediate level on all in-service A/P22P-17 assemblies as follows:

Materials Required

Quantity	Description	Reference Number
As Required	Lubricant Stick	Zipperease NIIN 00-999-7548

NOTE

For inspection of HGU-32/P Anti-Exposure Hood refer to Section 3-20 and Section 3-34 for inspection of HAU-12/P Anti-Exposure Mittens.

1. If required, clean components in accordance with paragraph 5-59.

2. Place coverall assembly on clean, flat surface and inspect as follows:

a. Inspect coverall surface, wrist seals, neck seal, and socks for damaged fabric, holes, and loose or broken stitching.

b. Inspect slide fasteners for damaged chain, loose teeth, improper chain alignment, damaged or split end seal blocks, damaged or missing pull tabs (metal and fabric), ease of operation, and loose slide fastener tape.

c. Turn coverall inside out, repeat steps a and b, and inspect seam tapes for security and fraying. Check the service life in accordance with paragraph 5-340.

d. Using lubricant stick, apply coating of lubricant to slide fastener.

e. Repair in accordance with paragraph 5-61, 5-116, and Table 5-7.

f. Water test in accordance with paragraph 5-57.

3. Document inspection and maintenance actions in accordance with COMNAVAIRFORINST 4790.2.

5-340. SERVICE LIFE CHECK. The service life is the time period during which the anti-exposure coverall can be maintained in service without replacement. The service life for the anti-exposure coverall is 12 years, computed from the date of manufacture. When the anti-exposure coveralls lack a legible date of manufacture (DOM) so that age of the coveralls cannot be verified, the applicable coverall shall be considered non-RFI and removed from service. If the DOM can be established via records maintained on the coverall, the DOM shall be stenciled in permanent marker on the coverall and shall be considered the DOM for the purpose of service life check. Unless otherwise noted the anti-exposure coverall service life shall start on the first date of the month of the date of manufacture and expire on the last day of that month.

NOTE

If the contract number is legible on a coverall without a legible DOM, the contract number can be used to establish a DOM. For example, a coverall with a contract number of SPO100-98-D-4018 was built sometime after the year 1998 as the contract was awarded in 1998. Thus the DOM for this particular coverall with no legible DOM, but a legible contract number SPO100-98-D-4018 could safely be established as JAN 1999.

1. Check markings for completeness, legibility and agreement with assembly records. If manufacturers tag becomes worn, loose or torn, stencil DOM on the inside of the coverall, near the entrance slide fastener, where the manufacturers label would/should normally be located.

2. Check the date of manufacture to ensure that the anti-exposure coverall is not beyond its established 12-year service life. The date of manufacture tag is located on the inside of the suit near the entrance slide fastener. The anti-exposure coverall shall be replaced if service life expires prior to the next inspection cycle unless the next inspection cycle is shortened to comply with the service life expiration date. When the coverall reaches the service life limit, it shall be returned to supply for disposition.

5-341. CLEANING. Clean and treat the CWU-79/P coveralls in accordance with paragraph 5-59. Refer to Sections 3-37 and 3-35 for cleaning requirements of HGU-32/P Hood and HAU-12/P Mittens.

5-342. STORAGE

5-343. Store ensemble in accordance with paragraph 5-60. Fold in accordance with Figure 5-50.

CAUTION

Do not store coveralls or spare parts in a lighted area (sunlight or fluorescent) or near power generators. Sunlight, fluorescent light, and generators produce ozone, which will degrade any rubber parts.

5-344. REPAIRS/REPLACEMENT/FABRICATIONS. Repairs, replacements, and fabrications shall be performed at intermediate level of maintenance.

5-345. REPAIRS. Fabric repairs shall be in accordance with paragraph 5-61.

5-346. CWU-79/P PRE-INSTALLATION INSPECTION OF REPLACEMENT NECK AND WRIST SEALS. Replacement neck and wrist seals for the CWU-79/P anti-exposure coveralls are assigned a shelf life of three years. How- ever, they may still be serviceable beyond the assigned expiration date. All neck seals (P/N 3497AS105-1, NIIN 01-449-8918) and wrist seals (Pair P/N 3497AS104-3, NIIN 01-449-8920) may be installed regardless of expiration date only after passing the following inspection to determine their usability.

1. Inspect wrist seal in the following manner:

a. Visually inspect each wrist seal for cracking, especially at the open edges of the seal (i.e., top and bottom edges).

b. Lay wrist seal on its side and press out flat. Hold seal at top and bottom edges and stretch vertically. Inspect for cracks and deterioration. Repeat this procedure until the entire circumference of the seal has been inspected. If cracks or deterioration are identified, discard seal.

c. Lay wrist seal on its side and press out flat. Hold seal at its sides (folded edges) and stretch horizontally. Inspect for cracks and deterioration. Repeat this procedure until the entire surface of the seal has been inspected. If cracks or deterioration are identified, discard seal.

d. Examine the stitching for security and the attachment of the adjustment straps to the seal. Discard seal if broken stitches are evident or if the adhesive on the wrist seal has deteriorated.

2. Inspect neck seal using procedures described in steps a through d above.

3. Neck and wrist seals shall be used only after passing the above inspection.

5-347. REMOVAL OF CWU-79/P NECK/WRIST SEALS.

CAUTION

Use care not to damage coverall fabric when removing neck and wrist seals. Use of a heat seal machine and/or application of toluene to the adhesive can aid in removal of old neck/wrist seals.

1. Turn neck/wrist seal area of coveralls inside out.

NOTE

Aquaseal was used in modification in accordance with ACC 613 and heat seal tape was used in contractor modification.

2. Apply toluene to aquaseal/adhesive or apply heat to heat seal tape/adhesive using heat machine to soften adhesive.

NOTE

When using toluene in the removal process, allow time for the aquaseal/adhesive to soften.

3. Lift/pull old neck/wrist seal away from cloth fabric.

4. Remove old aquaseal by dabbing with toluene and scraping excess off with a fid.

5. Carefully cut stitching holding old neck/wrist seal together and peel remainder of old neck/wrist seal from the neck of the coverall.

6. Clean the cloth side of the neck seal attachment area approximately 1 1/2 inches from the outside edge using toluene solvent. Repeat until clean. Allow 20 minutes for toluene to dry.

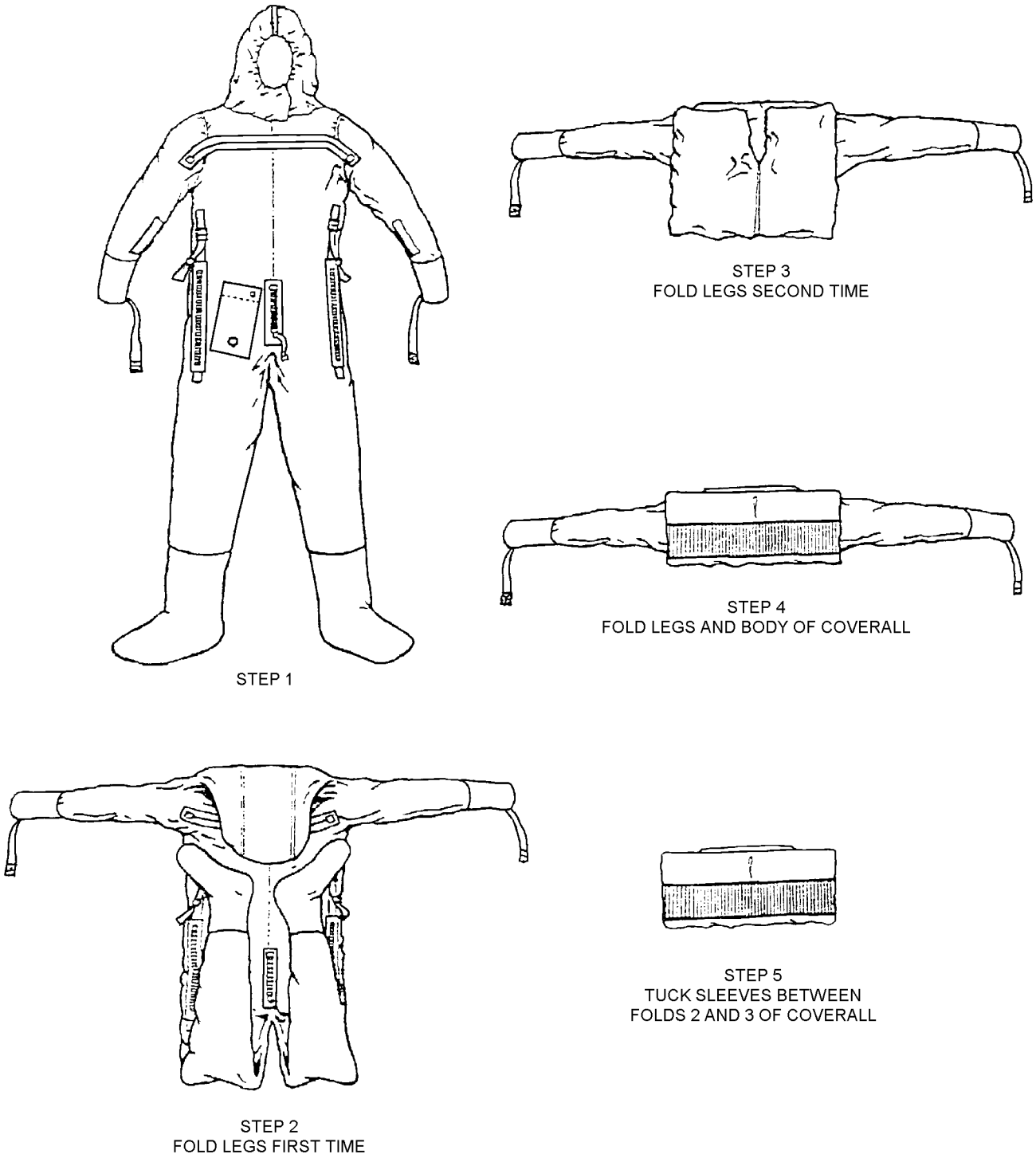

5-4

Figure 5-50. Folding Procedure for CWU-79/P Anti-Exposure Coverall

5-348. REPLACEMENT CWU-79/P NECK SEAL. To replace neck seal, proceed as follows:

Materials Required

Quantity	Description	Reference Number
As Required	Adhesive, Polychloroprene (Note 1)	MIL-A-5540 NIIN 00-515-2246
1	Hand Roller	GGG-R-00620 NIIN 00-243-9401
1	CWU-79/P Neck Seal	3497AS105-1 NIIN 01-449-8918
1	Pencil, Grease	SS-P-196 NIIN 00-181-7267
As Required	Aquaseal, Neoprene Cement	Commercial (Note 2)
As Required	Toluene	TT-T-548 NIIN 00-281-2002 -or- NIIN 00-579-8431
As Required	Tape Seam, 1 1/2-Inch	NIIN 01-193-0469
As Required	Tape Seam, 7/8-Inch	NIIN 01-189-6361

Notes: 1. Adhesives may come from supply that contain both a base adhesive and an accelerator. Mixing of the accelerator with the base adhesive is not recommended for use on any items requiring adhesive in this manual. Use only the base adhesive.

2. Aquaseal Neoprene Cement may be purchased from:

McNett Corporation
Bellingham, WA
1-800-221-7325

1. Before installing replacement neck seal on the CWU-79/P, inspect each new seal in accordance with paragraph 5-346.

2. Remove neck seal in accordance with paragraph 5-347.

3. Mark a 1 1/4-inch adhesive application line parallel to the coverall neck opening and a 1-inch neck seal application line from the outside edge of the neck opening.

4. Apply double-sided tape to the top of the neck attachment. Fold the side seams of the neoprene neck seal together to find center front and back, mark on the inside (rubber) of the seal. Place/align the seal on the plastic ring, cloth side down, keeping 1/4 inch inside the ring edge so the alignment marks on the ring are visible. Align sides, front and back to the marks on the ring. Transfer all marks from the ring to the seal. Remove the seal and transfer marks to the cloth side. Reattach seal to the ring, rubber side down, and align, keeping 1/4 inch inside the ring edge.

5. Use the neck seal ring as backing under the coverall neck opening by placing it inside the opening with the inside (white) of the coverall neck opening facing up. Once in place, clamp down the material with binder clips so that the neck opening lays flat on the ring. On the cloth slide of the seal, mark a 1-inch adhesive application line parallel to the seal edge, at 1/8 increments as identified in step 4. Apply polychloroprene adhesive in the areas marked on the coverall (to the 1 1/4-inch mark), and on the neck seal (to the 1-inch mark) including the edge of the seal. Apply three coats of adhesive, observing proper dry time/procedures between each coat. When dry, remove seal from the ring.

NOTE

Do not stretch seal while attaching or folds will form.

6. Align the seal to the coverall (cloth side of seal to inside of coverall) orienting front and back of each. At side marks, dampen the adhesive with a light coat of toluene. Follow seal attachment line while attaching seal to coverall (1 inch mark). As seal is being attached, fold/roll seal edge to coverall adhesive application line (1 1/4 inch mark) so that the seal presents a flat finish. Use roller if needed. Once in place, allow the adhesive to dry a minimum of 24 hours.

5-349. REPLACEMENT OF CWU-79/P WRIST SEAL.

Materials Required

Quantity	Description	Reference Number
As Required	Adhesive, Polychloroprene (Note 1)	MIL-A-5540 NIIN 00-515-2246
1	Hand Roller	GGG-R-00620 NIIN 00-243-9401
1	Wrist Seal	3497AS104-3 NIIN 01-449-8920
1	Pencil, Grease	SS-P-196 NIIN 00-181-7267
As Required	Aquaseal, Neoprene Cement	Commercial (Note 2)
As Required	Toluene	TT-T-548 NIIN 00-281-2002 -or- NIIN 00-579-8431
As Required	Tape Seam, 1 1/2-Inch	NIIN 01-193-0469
As Required	Tape Seam, 7/8-Inch	NIIN 01-189-6361

Notes: 1. Adhesives may come from supply that contain both a base adhesive and an accelerator. Mixing of the accelerator with the base adhesive is not recommended for use on any items requiring adhesive in this manual. Use only the base adhesive.

2. Aquaseal Neoprene Cement may be purchased from:

McNett Corporation
Bellingham, WA
1-800-221-7325

NOTE

The following procedure requires the use of a minimum of two tubes three inches in diameter and 8 inches long. The tubes must be inserted into the sleeves of the coveralls to stabilize the sleeves and cuffs during installation of wrist seals.

1. Before installing replacement wrist seal on the CWU-79/P, inspect each new seal in accordance with paragraph 5-346.

2. Remove wrist seal in accordance with paragraph 5-347.

3. Orient left and right wrist seal by the direction for the pile fastener tape location. The hook fastener tape strap should be closest to the seal opening end. The pile fastener tape will mate by pulling toward the body, up and around the wrist, to the back of the hand.

4. Turn wrist seal inside out, apply toluene approximately 1 1/2 inches from the outside edge, rubber side of wrist seal. (The end without the hook and pile fastener.) Let area dry and repeat.

5. Mark an adhesive application line on the wrist seal at 1 1/4 inches on the edge prepared in step 4.

6. Install 3-inch diameter tube into coverall sleeve edge on the green side of cloth.

7. Mark an adhesive application line 1 1/2 inches from the coverall sleeve edge on the green side seam.

8. Install the wrist seal over the tube overlapping the coverall sleeve approximately 1 1/4 inches from the coverall sleeve opening, with hook and pile fastener furtherest away from sleeve opening. Line up coverall underarm sleeve seam with wrist seal seam.

9. Fold wrist seal back on itself at coverall sleeve end 1 1/2 inches.

10. Apply adhesive in the areas marked on the coverall sleeve. Apply three coats observing proper drying time/procedures between each coat.

NOTE

Dampen sleeve adhesive as required using light coat of toluene.

11. Before third coat of adhesive is dry, roll cuff over the adhesive on coverall sleeve to the 1 1/4 inch marks and turn down edge to the 1 1/2 inch marks.

12. Using roller or fid, apply pressure to the cuff and sleeve adhesive area and bond together.

13. Allow to dry for a minimum of 24 hours.

14. After dry, work tube out of coverall sleeve by rolling fabric off the tube.

15. Turn sleeve inside out and apply coat of aquaseal to wrist seal and coverall covering an area

approximately 3/8 inch on either side of the seam edge. Using an acid brush, smooth the aquaseal along the seam. If heat seal tape is applied over adhesive, it shall extend 1/2 inch over the edge of the cloth onto the neck/wrist seal area with remaining tape applied to the coverall fabric. Aquaseal or heat seal tape shall be acceptable.

16. Allow to dry a minimum of 24 hours.

17. Water test in accordance with paragraph 5-57.

5-350. HGU-32/P ANTI-EXPOSURE HOOD ASSEMBLY AND HAU-12/P ANTI-EXPOSURE MITTENS STOWAGE. Refer to Sections 3-37 and 3-35 for procedures required to place the HGU-32/P hood and HAU-12/P mittens in service. To stow the hood and mittens in the CWU-79/P coverall proceed as follows:

Materials Required

Quantity	Description	Reference Number
As Required	Cord, Nylon, Type I (with core strands removed)	MIL-C-5040, NIIN 00-240-2154

1. Cut three 60-inch lengths of nylon cord.

2. Tie one cord to the grommet of each mitten and the hood using a 2-inch bowline knot.

3. Tie the other end of each cord to the grommet in the thigh pocket of the CWU-79/P coverall.

4. Fold hood and mittens to fit the thigh pocket. Accordion fold cords, secure with rubber band and stow in thigh pocket.

Section 5-7. CWU-83/P Passenger Anti-Exposure Coverall Ensemble

5-351. GENERAL.

5-352. The CWU-83/P Passenger Anti-Exposure Coverall Ensemble, which is comprised of the CWU-83/P Passenger Anti-Exposure Coverall (PAEC), neoprene gloves, neoprene hood, and worn with the LPU-32/P or LPP-lA life preserver unit and HGU-24/P cranial, is designed to provide cold weather/water protection for non-combat equipped passengers. The ensemble will be used on Carrier Onboard Delivery (COD) and Vertical Onboard Delivery (VOD) aircraft on flights over water or where cold climatic conditions could be hazardous or fatal should emergency egress be necessary. When worn over regular winter uniforms or winter civilian clothing, the CWU-83/P can provide 1 hour protection from hypothermia in 40°F seas. The CWU-83/P is a replacement for the CWU-79/P.

5-353. Fleet activities can order the CWU-83/P through the supply system (Table 5-30) or GSA. All references to the ensemble shall be CWU-83/P Series, Work Unit Code (WUC) 96K1100.

5-354. CONFIGURATION.

5-355. The CWU-83/P Passenger Anti-Exposure Coverall (PAEC) (Figure 5-51) was designed to meet requirements for anti-exposure protection for non-troop, non-aircrew personnel on Carrier Onboard Delivery (COD) and Vertical On-Board Delivery (VOD) missions when anti-exposure protection is required for the aircrew. The suit is a commercial coverall composed of a Nylon/Goretex™ laminate that prevents water from leaking in, but allows sweat vapor to evaporate and alleviate heat stress and moisture buildup. The CWU-83/P has a neoprene hood stowed in the right thigh pocket and neoprene five-finger gloves stowed in each of the forearm pockets. The hood and each glove are secured to the suit with a snap-off ribbon lanyard. Three sizes of coverall are available to passengers and have color-coded labels on the chest area. The Size Small coverall has contrasting yellow trim; the Size Large has no contrasting color trim; the Size XXXLG has contrasting green trim. Neoprene wrist and neck seals stretch to fit each of the small, large and XXXLG size range. To expel trapped air in the suit, the suit is equipped with a self-burping exhaust valve on each shoulder, and air-blocking zip panels (gaiters) on each calf. To assist with search and rescue, a lifejacket retention loop is installed on the center front and a grab panel is installed across the center upper back.

5-356. APPLICATION.

5-357. The CWU-83/P shall be worn by non-combat equipped passengers for flight operations in accordance with the climatic and operational requirements established by the NATOPS General Flight and Operational Instructions Manual OPNAVINST 3710.7 Series.

5-358. MODIFICATIONS.

5-359. Currently there are no modifications for the CWU-83/P Ensemble.

Table 5-30. CWU-83/P Ordering Information

Size	Part Number	NIIN	Color	Contrasting Trim Color
Small	3666AS100-1	01-517-7796	Orange	Yellow
Large	3666AS100-2	01-517-7801	Orange	None
XXXLG	3666AS100-3	01-517-7802	Orange	Green

5-360. FITTING.

5-361. The Ensemble should be issued to passengers using Table 5-31 for guidance.

Table 5-31. Sizing Guide (CWU-83/P Anti-Exposure Ensemble)

Size	Chest	Collar	Height
Small	32 - 42	11 - 14	5 ft - 5 ft 10 in
Large	44 - 54	14 - 17.5	5 ft 10 in - 6 ft 3 in
XXX Large	56 - 58	17 3/8 - 19	5 ft 5 in - 5 ft 9 in
Dimensions in inches, unless otherwise noted.			

5-362. DONNING.

NOTE

The CWU-83/P is sized to be worn over the passenger's winter clothing. The anti-exposure hood and mittens should remain stowed in the pockets and donned after egress unless passengers are otherwise advised by the crew chief.

1. Remove shoes/boots and sharp objects (jewelry, eyeglasses, and watches) (Figure 5-52). Sharp objects and jewelry shall be carried in the passenger's pocket to prevent damage to the coverall.

2. Tuck pant legs in socks.

3. Step into suit through large zipper.

4. Pull suit up to waist and push each arm through each sleeve.

5. Reach behind back and pull neck seal over head.

6. Zip closed, being sure that zipper is completely seated against zipper stop.

7. Zip calf panels closed.

8. Don life preserver.

9. Don cranial.

10. Put on shoes/boots. Watches and eyeglasses may be replaced after donning.

5-363. DOFFING.

1. Remove life preserver, cranial, and if worn, hood and gloves.

2. Stow hood and gloves in appropriate pockets.

3. Open zipper.

4. Remove watch and eyeglasses, if worn.

5. Grasp chest area of coverall and pull up and back over head.

6. Pull wrist seals off hands.

7. Peel coverall down.

8. Step out of coverall.

9. If gaiters have turned inside out (i.e., are on the front side of the calf, turn right side out (i.e., are on the back side of the calf).

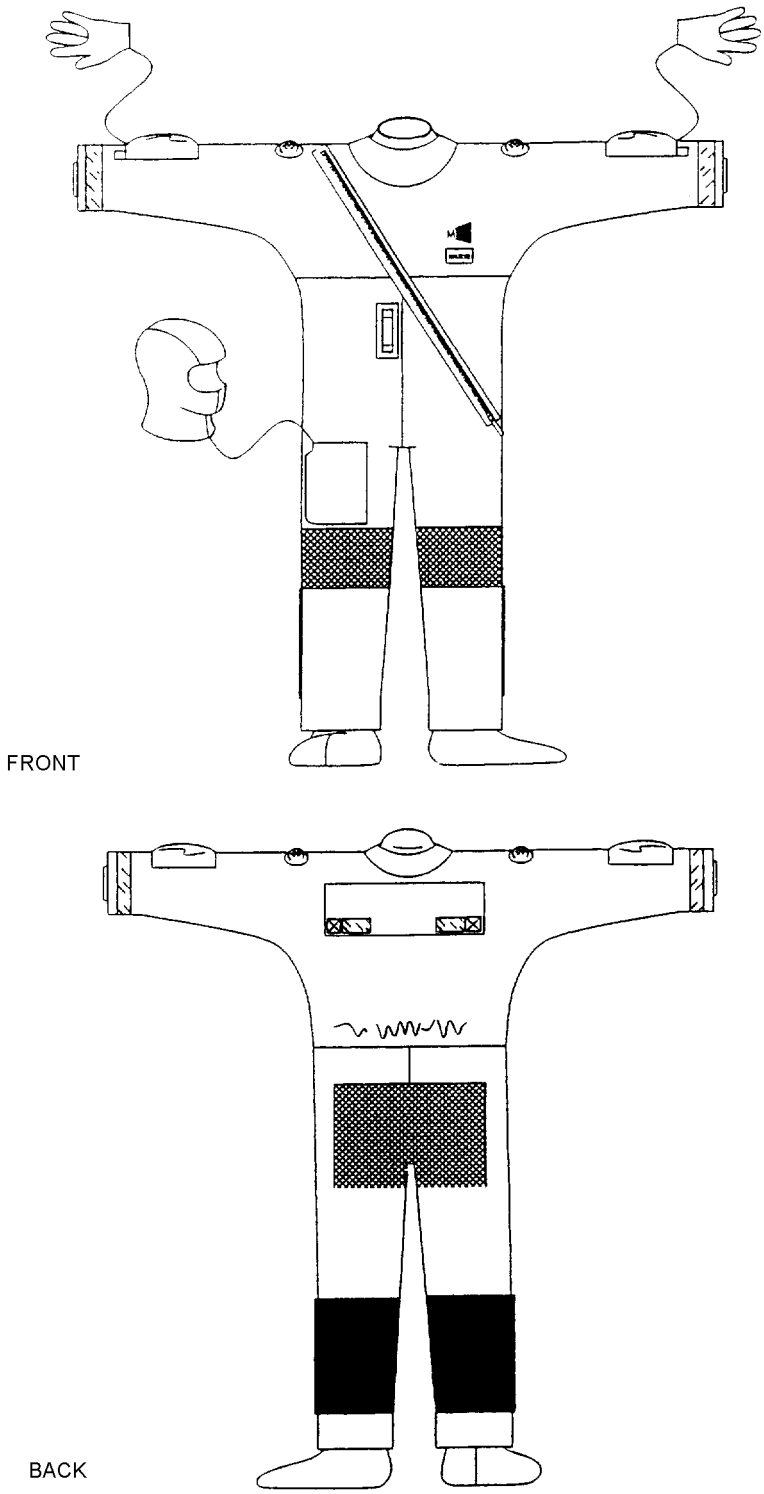

005004a

Figure 5-51. CWU-83/P Passenger Anti-Exposure Ensemble

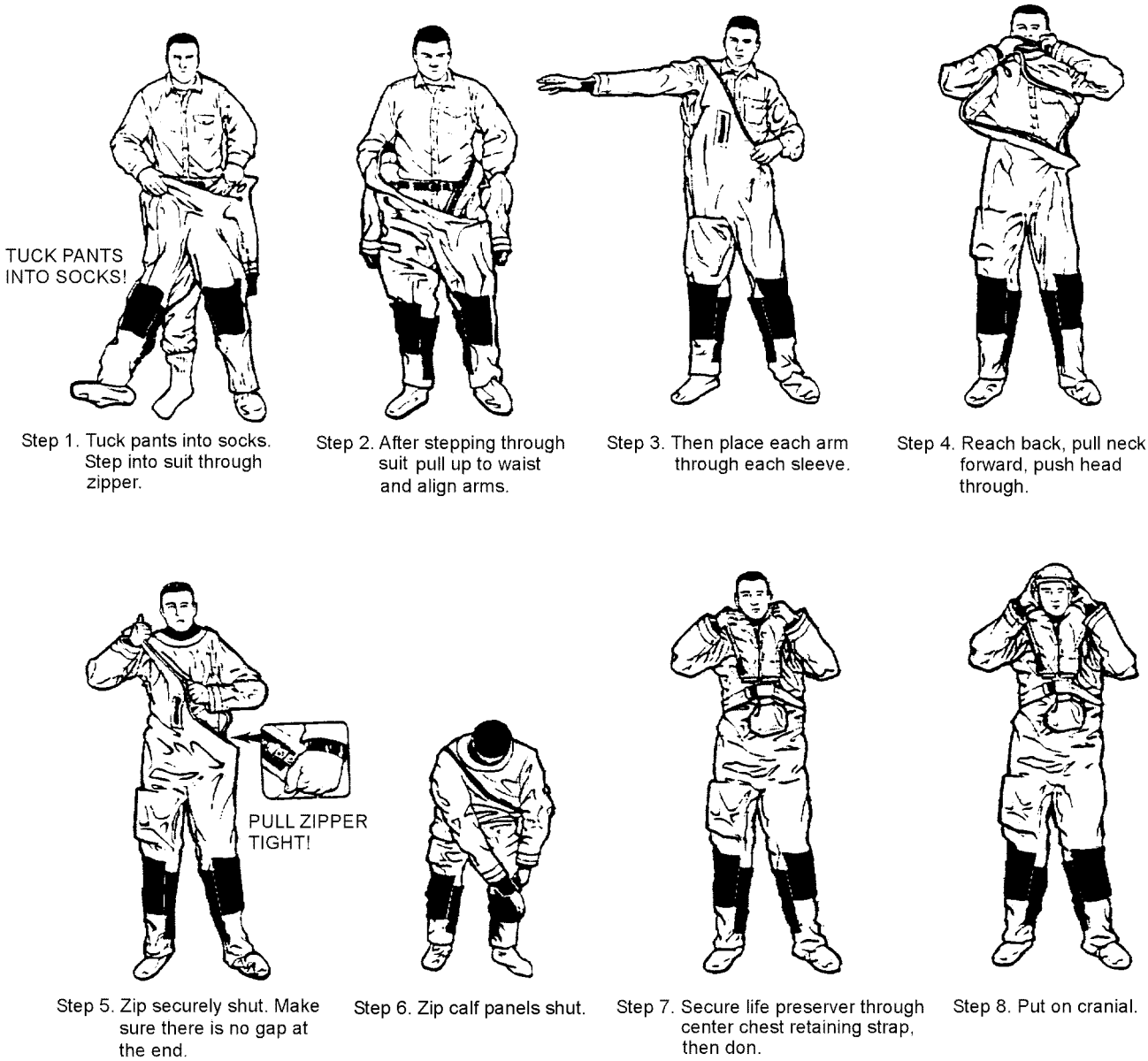

Step 1. Tuck pants into socks. Step into suit through zipper.

Step 2. After stepping through suit pull up to waist and align arms.

Step 3. Then place each arm through each sleeve.

Step 4. Reach back, pull neck forward, push head through.

Step 5. Zip securely shut. Make sure there is no gap at the end.

Step 6. Zip calf panels shut.

Step 7. Secure life preserver through center chest retaining strap, then don.

Step 8. Put on cranial.

005004b

Figure 5-52. Donning Steps for CWU-83/P Passenger Anti-Exposure Ensemble

5-364. MAINTENANCE.

NOTE

Quality Assurance (QA) inspection requirements are included in inspection, repair, and replacement procedures. When a procedure is underlined, an authorized QA representative shall verify that the procedure was correctly accomplished before the next step can be performed.

5-365. Maintenance of the CWU-83/P consists of inspection, cleaning, repair, and replacement. Repair and replacement functions for the CWU-83/P shall be accomplished at organizational (O) and intermediate (I) level or above. All maintenance actions shall be documented in accordance with COMNAVAIRFORINST 4790.2. In addition, a damage chart (Figure 5-53) shall be maintained for each CWU-83/P coverall. The damage chart is intended as an aid to O-level maintenance technicians in describing needed repairs by I-level personnel. I-level technicians shall use the damage chart as an aid during inspection.

5-366. INSPECTION. Inspection requirements of the CWU-83/P Passenger Anti-Exposure Coverall shall include Place-In-Service, Preflight, Postflight, and 360-Day inspections.

5-367. Place-In-Service Inspection. The Place-In-Service inspection shall be performed prior to placing in service when issued and upon removal from storage. Inspection shall be performed in accordance with paragraph 5-370, 360-Day inspection.

NOTE

Although there is no requirement for anti-exposure suits to be inspected at certain times of the year, the best maintenance practice for the suit is to time the inspections of the anti-exposure suits so that the 360-Day Inspection is being done as the suit is taken out of seasonal storage in the fall. See paragraph 5-60 for storage requirements and storage clarification.

5-368. Preflight Inspection. The preflight inspection is a visual inspection that shall be performed by an assigned aircrewmember who will inspect and issue a coverall assembly to each passenger prior to each flight as follows:

1. Zippers for proper function and ease of use.

2. Seams for loose tape or separation.

3. Fabric for tears, cuts, worn areas, and other deterioration resulting in leakage.

4. Neck and wrist seals for damage and proper bonding to coverall.

5. Socks for attachment to coverall.

6. Arm pockets for gloves. Right and left as appropriate.

7. Thigh pocket for hood.

5-369. Postflight Inspection. Perform the Postflight inspection as follows:

1. Perform the preflight inspection in accordance with paragraph 5-368.

2. After inspection, hang coverall on a hanger inside out.

3. Allow to air dry in a cool, dry, well ventilated area.

INSPECTING ACTIVITY _____ DATE _____

INSPECTOR _____ COVERALL SERIAL # _____

INSPECTION/TEST REMARKS: _____

_____

_____

_____

REPAIR REMARKS: _____

_____

_____

REPAIRED BY _____ INSPECTOR _____ DATE _____

(COVERALL DEPICTED INSIDE OUT)

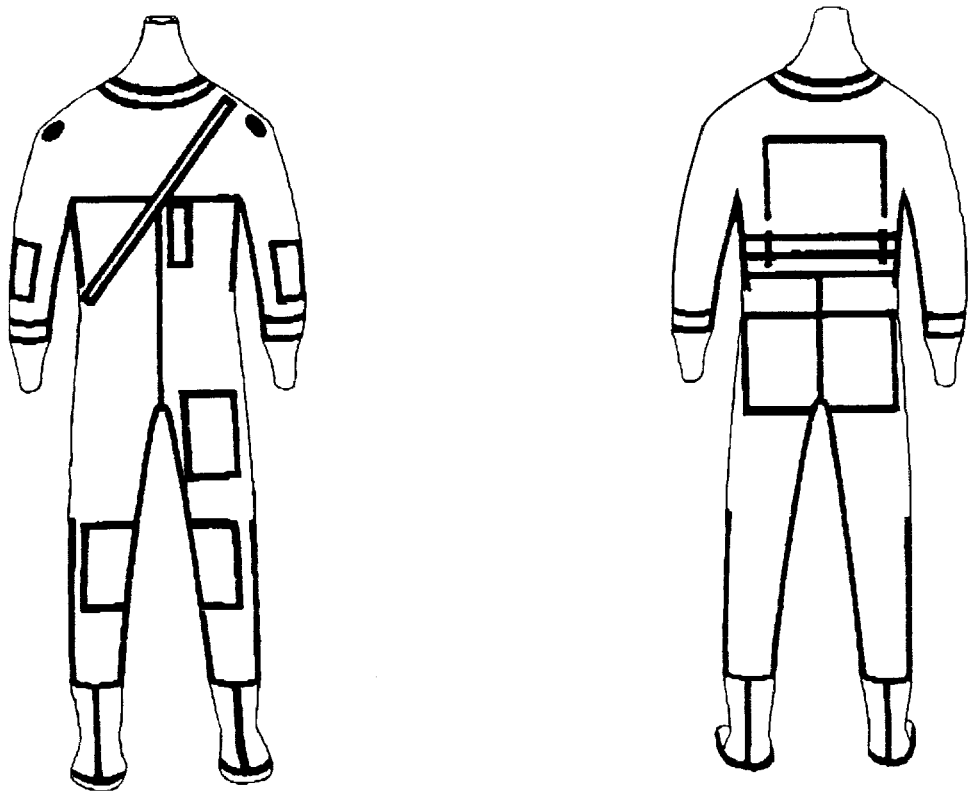

005004c

Figure 5-53. CWU-83/P Anti-Exposure Coverall Damage Chart

5-370. 360-Day Special Inspection. The 360-Day inspection shall be performed prior to placing in service and every 360 days thereafter at intermediate level as follows:

Materials Required

Quantity	Description	Reference Number
As Required	Lubricant Stick	Zipperease NIIN 00-999-7548

1. Remove suit from box and bag if applicable.

2. If required, clean fabric in accordance with paragraph 5-59.

3. Lay coverall right side out on clean flat surface or suspend from a hanger, and inspect as follows:

a. Inspect coverall surface, wrist seals, neck seal, and socks for damaged fabric, holes, and loose or broken stitching. Mark any defective areas on damage chart.

b. Inspect slide fasteners for damaged chain, loose teeth, improper chain alignment, damaged or split end seal blocks, damaged or missing pull tabs (metal and fabric), ease of operation, and loose slide fastener seam tape. Mark any defective areas on damage chart.

c. Turn coverall inside out, repeat steps a and b, and inspect seam tapes for peeling, wear, and fraying. Check the service life in accordance with paragraph 5-371.

d. Using lubricant stick, apply coating of lubricant to slide fastener.

e. Repair in accordance with paragraph 5-61.

4. Leak test in accordance with paragraph 5-57.

5. Inspect neoprene hood and gloves for deterioration, cracking, seam separation or tears.

6. Document inspection and maintenance actions on damage chart (Figure 5-49) and in accordance with COMNAVAIRFORINST 4790.2.

5-371. SERVICE LIFE CHECK. The service life is the time period during which the anti-exposure coverall can be maintained in service without replacement. The service life for the anti-exposure coverall is 12 years, computed from the date of manufacture. When the anti-exposure coveralls lack a legible date of manufacture (DOM) and a service life check cannot be verified, the applicable coverall shall be considered non-RFI and removed from service. If the DOM can be established via records maintained on the coverall, the DOM shall be stenciled in permanent marker on the coverall and shall be considered the DOM for the purpose of service life check. Unless otherwise noted the anti-exposure coverall service life shall start on the first date of the month of the date of manufacture and expire on the last day of that month.

NOTE

If the contract number is legible on a coverall without a legible DOM, the contract number can be used to establish a DOM. For example, a coverall with a contract number of SPO100-98-D-4018 was built sometime after the year 1998 as the contract was awarded in 1998. Thus the DOM for this particular coverall with no legible DOM, but a legible contract number SPO100-98-D-4018 could safely be established as JAN 1999.

1. Check markings for completeness, legibility and agreement with assembly records. If manufacturers tag becomes worn, loose or torn, stencil DOM on the inside of the coverall, near the entrance slide fastener, where the manufacturers label would/should normally be located.

2. Check the date of manufacturer to ensure that the anti-exposure coverall is not beyond its established 12-year service life. The date of manufacture tag is located on the inside of the suit near the entrance slide fastener. The anti-exposure coverall shall be replaced if service life expires prior to the next inspection cycle unless the next inspection cycle is shortened to comply with the service life expiration date. When the coverall reaches the service life limit, it shall be returned to supply for disposition.

5-372. CLEANING. Clean in accordance with paragraph 5-59. When needed, close zippers and launder in cold water with low sudsing detergent (NIIN 00-282-9699 or commercial equivalent) in delicate cycle.

NOTE

Do not bleach; do not dry-clean; do not iron; do not tumble dry.

5-373. STORAGE. Store ensemble in accordance with paragraph 5-60.

CAUTION

Do not store coveralls or spare parts in a lighted area (sunlight or fluorescent) or near power generators. Sunlight, fluorescent light, and generators produce ozone, which will degrade any rubber parts.

5-374. REPAIRS, REPLACEMENT, AND FABRICATIONS. Repairs, replacements, and fabrications shall be performed at I-level maintenance. However, sewing wrist and neck seals, socks, reinforcement fabric, and gaiters to the CWU-83/P coveralls may be performed at O-level as long as seam sealing and leakage testing are performed at I-level. Repairs shall be made in accordance with paragraphs 5-61 and 5-89.

NOTE

All stitching shall be in accordance with ASTM-D-6193, Type 301 lockstitch, 5 to 7 stitches per inch with a minimum backstitch and/or overstitch of 1 inch.

5-375. Removal of Original Neck and Wrist Seals and Socks. Remove neck and wrist seals and socks from CWU-83/P ensemble as follows:

CAUTION

Use care not to damage coverall fabric when removing neck and wrist seals.

1. Turn coveralls inside out.

2. Apply heat to seam tape (to break adhesion bond).

3. Lift/pull old seam tape away from inner cloth.

WARNING

Do not use toluene near open flames, heat, or electrical sparks. Avoid prolonged contact with skin or breathing fumes. Use only in well ventilated area.

CAUTION

Toluene may damage equipment if not used with care. Avoid all contact with areas not to be cleaned. Wipe up excess or spills immediately.

4. Clean fabric by brushing lightly with toluene.

5-376. Removal of Replacement Neck and Wrist Seals and Socks.

1. Turn coveralls inside out.

2. Apply heat to seam tape to break adhesion bond.

3. Lift/pull seam tape away from inner cloth.

CAUTION

When removing stitching, be careful not to poke holes or slice body of coverall.

4. Remove stitching from seam using razor or seam ripper.

5. Cut off sleeve or leg extension (the fabric cuff that normally hangs over and covers the wrist seal or sock) along the seam line. Discard.

5-377. Pre-installation inspection and cleaning of replacement neck and wrist seals. Replacement neoprene neck and wrist seals shall be obtained from TYCOM.

NOTE

Installed and replacement neck and wrist seals may exhibit a greenish powdery manufacturing residue and shall be cleaned prior to installation.

Materials Required

Quantity	Description	Reference Number
As Required	Acetone	ASTM-D-329 NIIN 01-003-0262
As Required	Paper Towels, White	A-A-696 NIIN 01-359-0798 or equivalent

Support Equipment Required

Quantity	Description	Reference Number
PR	Gloves, Rubber	DELTA-392 NIIN 01-463-5934
1	Safety Goggles	UVEX Splash Guard 9305 NIIN 01-292-2818 or equivalent
1	Respirator, NIOSH Organic Vapor Particulate Filter	808074 NIIN 01-312-8701 or equivalent

1. Service life of the replacement neoprene neck and wrist seals is three years from date of manufacture. Check service life before proceeding with cleaning or installation of the wrist and/or neck seals.

WARNING

Use acetone in well ventilated area.

2. Dampen a paper towel with acetone and gently scrub the residue from the inside shiny surface of seal. Be careful not to use too much acetone. Shrinking and wrinkling of shiny neoprene skin indicates that too much acetone is being used. Be careful not to wet the adhesives, seam tapes or other fabric parts. Wetting these areas may result in parts becoming unglued and detached.

3. Wipe scrubbed area off using clean white paper towels until no more green film comes off on paper towel.

4. Dispose of all used paper towels in appropriate flammable waste container.

5. Let neck or wrist seals air dry prior to installation or use.

6. If using as replacement seal, install in accordance with paragraph 5-378 or 5-379.

5-378. Installation of Neck Seals. Inspect replacement seal for secure attachment to fabric carrier, damage, cracks, and deterioration. If damaged, discard.

Materials Required

Quantity	Description	Reference Number
As Required	Tape, Seam, 1 1/2-Inch or 7/8-Inch	NIIN 01-193-0469 NIIN 01-189-6361
As Required	Thread, Nylon, Size E	NIIN 00-244-0609
1	Roller, Hand	GGG-R-00620 or commercial
1	Pencil, Grease	SS-P-196 NIIN 00-181-7267
1	Neck Seal, Small	3666AS101-1
	-or-	
1	Neck Seal, Large	3666AS101-2

CAUTION

Do not use lead pencil or ball-point pen to mark coverall fabric; both will cause leakage.

1. Clean replacement neck seal in accordance with paragraph 5-377.

2. Lay coverall flat, right side out and mark right and left shoulder front-to-back folds at neck edge. Next, fold coverall in half down length of body. Mark coverall at center front and center back folds at neck edge.

3. Fold right side out carrier in quarters; mark carrier at folds.

4. Turn carrier inside out. Overlap coverall at marks.

5. Sew carrier to neck edge with 3/8-inch seam allowance.

6. Heat seal with seam tape, pressing seam toward neck ensuring that tape overlaps seam allowance 1/4 inch each side of the seam allowance. Overlap ends of seam tape by 1 inch. Round seam tape edges to prevent peeling.

7. Leakage test in accordance with paragraph 5-57.

5-379. Installation of Wrist Seals. Inspect replacement seal for secure attachment, damage, cracks, and deterioration to fabric carrier. If damaged, discard.

Materials Required

Quantity	Description	Reference Number
As Required	Tape, Seam, 1 1/2-Inch or 7/8-Inch	NIIN 01-193-0469 NIIN 01-189-6361
As Required	Thread, Nylon, Size E	NIIN 00-244-0609
1	Roller, Hand	GGG-R-00620 or commercial
1	Pencil, Grease	SS-P-196 NIIN 00-181-7267
1 Pr	Wrist Seal, Small	3666AS102-1
1 Pr	Wrist Seal, Large	3666AS102-2

CAUTION

Do not use lead pencil or ball-point pen to mark coverall fabric; both will cause leakage.

1. Clean replacement wrist seals in accordance with paragraph 5-377.

2. Fold sleeve in half, right side out, front to back. Mark in quarters at center front, center back, and the center of the left and right sides at folds.

3. Fold carrier in half, mark carrier in quarters at folds.

4. Turn carrier inside out. Match carrier marks to sleeve marks.

5. Sew carrier to wrist edge with 3/8 inch seam allowance.

6. Apply 1 inch heat seal tape over seam, pressing seam toward neck. Make sure you overlap seam 1/4 inch on either side of seam allowance. Overlap ends of seam tape by 1 inch. Round seam tape edges to prevent peeling.

7. Leakage test in accordance with paragraph 5-57.

5-380. Installation of Socks.

Materials Required

Quantity	Description	Reference Number
As Required	Tape, Seam, 1 1/2-Inch or 7/8-Inch	NIIN 01-193-0469
As Required	Thread, Nylon, Size E	NIIN 00-244-0609
1	Roller, Hand	GGG-R-00620 or commercial
1	Pencil, Grease	SS-P-196 NIIN 00-181-7267
1	SRU-75/P Sock,	
	Small Size 10	NIIN 01-315-9401
	Large Size 13	NIIN 01-311-0315

1. Install sock in accordance with paragraph 5-74, steps 11 thru 19.

2. Leakage test in accordance with paragraph 5-57.

5-381. Repair of Neoprene Seals, Hood and Mittens.

1. To repair holes, tears, and cracks, apply a small amount of neoprene adhesive (P/N 1041, NIIN 00-440-5603, (CAGE 31711) or MIL-A-5540 or MIL-A-1357) to the torn edges.

2. Allow 10-minutes for adhesive to become tacky. Butt edges together.

3. Surface cracking can be repaired by applying cement to affected areas.

4. Document in accordance with COMNAVAIRFORINST 4790.2.

5-382. Repair of Loose Seam Tape. Repair loose seam tape in accordance with paragraph 5-61 and 5-116.

5-383. Repair of Fabric Body. Repair fabric body in accordance with paragraph 5-61 and 5-116.

5-384. Repair of Slide Fasteners. Repair slide fasteners in accordance with paragraph 5-64.

5-385. Replacement of Slide Fasteners. Replace slide fasteners in accordance with paragraph 5-65.

Table 5-32. Slide Selection Table for CWU-83/P Anti-Exposure Ensemble

CWU-83/P Size	Entrance Slide Fastener Length	Part Number	NIIN
Small	34	1370AS501-4	01-323-8118
Large	34	1370AS501-4	01-323-8118
Note: Length excludes top and end stops.			

5-386. Replacement of Gaiters.

Materials Required

Quantity	Description	Reference Number
As Required	Thread, Nylon, Size E	NIIN 00-244-0609
1	Pencil, Grease	SS-P-196 NIIN 00-181-7267
As Required	Gaiter	3666AS103

1. Cut off old gaiter about 1 inch from original seam lines.

2. Sew new gaiter to remains of old gaiter with a 1/2 inch seam allowance, being careful to keep suit free. Unzip slide fastener if needed.

3. Sew again with a 1/4 inch seam allowance.

4. Document in accordance with COMNAVAIRFORINST 4790.2.

5-387. Repair of Reinforcement Fabric. Repair reinforcement fabric in accordance with paragraph 5-68.

5-388. Replacement of Relief Valve Diaphragm. Replace relief valve diaphragm as follows:

Materials Required

Quantity	Description	Reference Number
1	Diaphragm, Relief Valve	3666AS104 NIIN 4220-01-481-3668 or Style Number 9012

NOTE

The diaphragm can be purchased via normal supply system and they are listed in the GSA catalogue. If problems are encountered purchasing the diaphragm they can be open purchased from Aerostar International Inc. by contacting Ms. Mary Van Emmerik at (605) 331-3520. A minimum order of 6 diaphragms must be ordered at a price of approximately $4.83 each.

1. Open zipper and find the defective relief valve diaphragm.

2. Pull the diaphragm rubber away from the hole and cut the stem.

CAUTION

Do not damage the relief valve when removing the diaphragm.

3. Remove diaphragm by pulling it through the center hole on the outside of the relief valve using a pair of tweezers or needle nose pliers.

CAUTION

Do not damage the diaphragm when installing it through the center hole in the relief valve.

4. Install new diaphragm by inserting the replacement through the center hole on the outside of the relief valve and pull diaphragm stem through the inside center hole of the relief valve.

5. Pull on the diaphragm stem until the shoulder of the diaphragm is through and seats on the inside hole of the relief valve.

6. Cut excess diaphragm stem leaving approximately 3/16 inch of the diaphragm stem.

7. Install outside diaphragm by pushing the diaphragm through the center hole in the relief valve.

8. Document in accordance with OPNAVINST 4790 Series.

5-389. Repair Procedures For Defective Male/ Female Glove Tether Line Retainer Snaps.

NOTE

All stitching shall be in accordance with ASTM-D-6193, Type 301 lockstitch, 5 to 8 stitches per inch with a minimum overstitch of 1/2 inch.

Defective female snaps shall be removed without replacement.

Materials Required

Quantity	Description	Reference Number
As Required	Tape, Fastener, Pile, 1 inch wide	MIL-F-21840 NIIN 00-151-6484 or equivalent
As Required	Thread, Nylon, Size E	V-T-295 NIIN 00-204-3884 or equivalent

1. Remove defective stud and eyelet from tether line end.

2. Let the fold remain in the tether line webbing.

3. Cut a 1 inch length of pile tape.

4. Center pile tape over the end of the tether line even at the folded edge.

5. Sew the pile tape to the tether line webbing using a boxstitch 1/16 inch from the edge of the webbing.

6. Stow the glove in the arm pocket and attach the pile tape to the hook tape at the hook tape corner opening where the hook tape ends meet.

7. Close the cover of the glove pocket and mate the hook and pile tape of the pocket to the sleeve.

8. If it is suspected that the integrity of the suit has been compromised by the damage to or the replacement of the tether line, the suit must be inspected and water leak tested in accordance with paragraph 5-370.

5-390. MAINTENANCE.

5-391. Repair and replacement functions for the CWU-62/P series coverall will be accomplished at the intermediate maintenance level or above.

NOTE

Authorization is granted at organizational level to stitch wrist and neck seals and socks onto the CWU-62/P series coveralls, provided heat sealing and water tests are performed at the intermediate level.

Quality Assurance Representative (QA) points are included in inspection, repair, and replacement procedures. When a procedure is underlined, there is a QA requirement. After performing procedure, stop and have Quality Assurance Representative ensure that step has been performed correctly.

5-392. MAINTENANCE DOCUMENTS. Documents used to record history and maintenance information consist of those documents described in Chapter 2 of this manual and the CWU-62/P series coverall damage chart (Figure 5-9, Figure 5-10, and Figure 5-11). The damage chart is also intended to aid the organizational level custodians of the coverall in describing other needed repairs to the intermediate level technicians. It shall be used by the intermediate level personnel as an aid during inspections. All maintenance actions and inspections shall be documented in accordance with COMNAVAIRFORINST 4790.2.

5-393. SERVICE LIFE CHECK. The service life is the time period during which the anti-exposure coverall can be maintained in service without replacement. The service life for the anti-exposure coverall is 12 years, computed from the date of manufacture. When the anti-exposure coveralls lack a legible date of manufacture (DOM) and a service life check cannot be verified, the applicable coverall shall be considered non-RFI and removed from service. If the DOM can be established via records maintained on the coverall, the DOM shall be stenciled in permanent marker on the coverall and shall be considered the DOM for the purpose of service life check. Unless otherwise noted the anti-exposure coverall service life shall start on the first date of the month of the date of manufacture and expire on the last day of that month.

Section 5-8. A/P22P-7(V) Quick Donning Flyer's Anti-Exposure Apparel Assembly CWU-60/P

5-394. GENERAL.

5-395. The A/P22P-7(V) Quick Donning Anti-Exposure Apparel Assembly is an emergency use assembly designed to keep the wearer warm and dry. The complete assembly provides protection from the thermal effects of cold water immersion in the event of emergency over water aircraft egress.

5-396. CONFIGURATION.

5-397. The A/P22P-7(V) Quick Donning Anti-Exposure Apparel Assembly consists of the components listed in Table 5-33 and is available through the TYCOM's direction only. P/N 1510AS102-1, NIIN 01-277-2899, consists of the CWU-60/P coverall and the stowage bag that the coverall is stored in. The coverall only is P/N 1510AS103-1 (no NIIN assigned for the coveralls only). Work Unit Code (WUC) is 96A2N.

5-398. UNDERCLOTHING. Wear CWU-43/P and CWU-44/P aramid cold weather underwear. Refer to Chapter 3 for detailed descriptions and sizing information for underwear.

5-399. CWU-45/P JACKET AND CWU-18/P TROUSERS. The CWU-45/P jacket and CWU-18/P trousers provide thermal insulation for winter flights over land and over water and can be worn under the CWU-60/P coverall in an emergency. Refer to Chapter 3 for detailed descriptions of these items. The CWU-64/P cold weather flyer's coverall is a one-piece lined coverall and is an authorized alternative to these two garments for winter flights. Refer to chapter 3 for a detailed description of this item.

5-400. CWU-60/P QUICK DONNING ANTI-EXPOSURE COVERALLS. Refer to Figure 5-54. The CWU-60/P is a one piece coverall constructed of a gas expanded, closed cell neoprene foam body, mittens, boots, face seal, an aramid laminated microporous poly tetrafluoroethylene (PTFE) hood, and neoprene coated cotton gloves. These neoprene gloves are located adjacent to the mittens and provide dexterity when needed. The outside of the coverall also has removable reflective tape to aid in search and rescue operations. Two types of reflective tape are provided: fluorescent red-orange for maximum daytime detection and bright silver for maximum nighttime detection. The tape provides passive detection and enables the aircrewmember to remove the reflective tape if evasion is desired. The coverall also includes ankle and waist straps and an entrance slide fastener which extends from the crotch up the center front. The suit also features a recovery harness which includes a D-ring providing the capability for helicopter pick up in case the survival vest is not being worn at the time of rescue. A pocket located on the right thigh of the coverall contains the HGU-32/P anti-exposure hood. CWU-60/P are maintained in the ALSS bond rooms and are available only through the TYCOM.

Table 5-33. Components of the A/P22P-7(V) Assembly

Component	Nomenclature	Paragraph
CWU-43/P	Drawers	3-283
CWU-44/P	Undershirt	3-283
CWU-45/P	Cold Weather Flyer's Jacket	3-139
CWU-18/P	Cold Weather Trousers	3-101
CWU-60/P	Quick Donning Anti-Exposure Coverall	5-397
CMU-21/P22P-7(V)	Survival Vest	6-51
LPU-27/P22P-7(V)	Life Preserver	5-401
HGU-32/P (optional)	Anti-Exposure Hood	3-713
HGU-68(V)2/P	Helmet	5-402

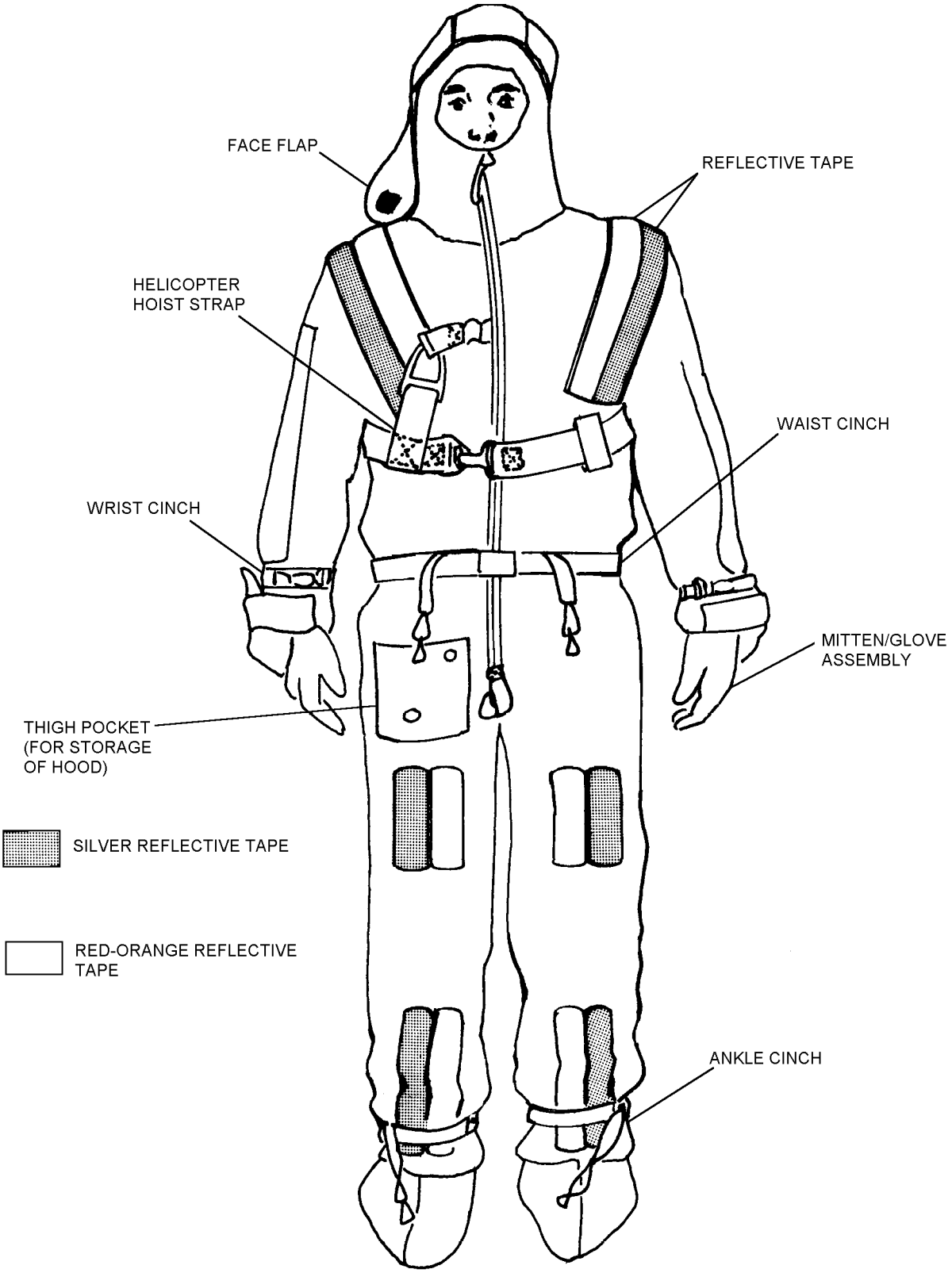

5-24

Figure 5-54. CWU-60/P Quick Donning Anti-Exposure Coverall

5-401. CMU-21/P22P-7(V) MODIFIED SURVIVAL VEST. The CMU-21/P22P-7(V) survival vest provides maximum useful storage for survival equipment, consistent with minimal bulk and weight. It is identical to the SV-2 survival vest, but has the addition of an expansion panel for use over the CWU-60/P.

5-402. LPU-27/P22P-7(V) LIFE PRESERVER UNIT. The LPU-27/P22P-7(V) is identical to the LPU-21B/P life preserver but has the addition of an expansion panel for use over the CWU-60/P. It is integrated with the CMU-21/P22P-7(V) in order to provide flotation for in-water survival situations. Refer to NAVAIR 13-1-6.1-2 for a detailed description of the LPU-27 life preserver.

5-403. HGU-32/P ANTI-EXPOSURE HOOD (OPTIONAL). The HGU-32/P hood is stowed in the thigh pocket of the CWU-60/P coverall. It is to be used whenever the helmet is removed during a cold water survival situation. Refer to Section 3-37 for a detailed description of the HGU-32/P hood.

5-404. HGU-68(V)2/P HELMET. The HGU-68(V)2/P helmet is worn by aircrew personnel of P-3 aircraft. The helmets are worn with the anti-exposure assembly and over the hood of the CWU-60/P coverall. Refer to NAVAIR 13-1-6.7-3 for detailed descriptions of the helmets.

NOTE

C-130 aircrews are not required to wear helmets.

5-405. APPLICATION.

5-406. The A/P22P-7(V) assembly is designed to provide a minimum of 6 hours of thermal protection against hypothermia and enough buoyancy to keep a downed aircrewman afloat should he be unable to board a liferaft. The CWU-60/P component is not worn continuously, but is stowed onboard the P-3 and C-130 aircraft for emergency use. In general, the coverall will be used by aircrewmembers in an emergency in accordance with climatic and operational requirements as established by NATOPS General Flight and Operational Instructions Manual (OPNAVINST 3710.7 Series).

5-407. FITTING.

5-408. FITTING. The CWU-60/P coverall is available in one size only but is adjusted to fit through use of ankle, wrist and waist straps to help maintain the proper fit and reduce the bulk. The other components of the assembly are fitted in accordance with procedures specified in their respective sections.

5-409. DONNING. To don the CWU-60/P coverall proceed as follows:

1. Remove your survival vest/life preserver unit and helmet, if applicable.

2. Insert feet into the coverall legs and cinch the ankle straps.

3. Pull the suit up and insert your arms into the sleeves. The hands should enter the glove side of the glove/mitten configuration. Cinch the wrist straps. Ensure hood is outside of coverall.

4. Close the entrance slide fastener, utilizing the thumb loop provided in the crotch/groin area. Pull down on the suit's crotch thumb loop, while pulling up on the slide fastener.

5. Cinch the waist straps and connect the helo-hoist strap.

6. Put your survival vest/life preserver on utilizing the extension panels provided if necessary. Secure survival vest leg straps.

NOTE

The CWU-60/P is worn over all flight clothing, including boots, but under the life preserver and survival vest.

5-410. MODIFICATIONS.

5-411. See Table 5-34 for applicable directives. Refer to Table 5-35 for repairs and fabrications to maintain serviceability.

Table 5-34. CWU-60/P Directives

Description of Modification	Application	Modification Code
Installation of Face Shield Repair Fabric	CWU-60/P Coveralls	67-1007 and 67-1007 AM 1

5-412. MAINTENANCE.

5-413. Maintenance of the CWU-60/P coverall shall consist of inspection, leakage testing, storage, repair, cleaning, and packing. All maintenance and repair operations shall be performed by Aircrew Survival Equipmentmen. All maintenance actions shall be documented in accordance with COMNAVAIRFORINST 4790.2.

NOTE

Inspections shall be performed during the aircraft's inspection cycle designated in Planned Maintenance Systems publications for the aircraft to which assigned.

In no case shall the inspection interval of inservice coveralls exceed 224 days, whether the coveralls are aircraft installed, shop spares or maintained in a flight gear pool.

5-414. PLACE-IN-SERVICE INSPECTION OF THE CWU-60/P COVERALL. The inspection shall be performed at intermediate level. To perform an inspection examine for the following:

1. Assembly for cuts, tears, abrasions, and deteriorations.

2. Seams for broken or loose stitching, seam separations and loose or damaged seam tapes.

3. Entrance slide fastener for proper operation and corrosion.

4. All hook and pile tape for damage and security.

5. Recovery harness for frayed webbing, deformed or missing hardware and security of attachment.

6. Inspect waist, wrist and ankle cinches for frayed straps and deformed or missing hardware.

7. Inspect all hardware for damage, wear, corrosion, and security of attachment.

8. Inspect for damaged or missing reflective tape patches.

9. Inflatable hood for cuts, tears, abrasion, deterioration, and proper attachment.

10. Conduct a leakage test of the HGU-32/P Hood in accordance with Section 3-37.

11. Stowage bag for broken stitching, tears, abrasion, holes, illegible printed data, and damaged/broken snaps.

12. Reinforce the hood face shield in accordance with paragraph 5-425.

13. Conduct a leak test in accordance with paragraph 5-418.

14. Document maintenance actions in accordance with COMNAVAIRFORINST 4790.2.

15. Verify inspection and/or repair and/or fit.

16. Document in accordance with COMNAVAIRFORINST 4790.2.

5-415. 224-DAY SPECIAL INSPECTION. The Special Inspection shall be performed by intermediate level or above prior to stowing the CWU-60/P onboard the aircraft and at the aircraft inspection cycle (every 224 days) thereafter. Only authorized repairs shall be made. To perform the Special Inspection proceed as follows:

NOTE

Refer to Section 3-37 for inspection, cleaning and repair of the HGU-32/P Hood.

1. If required, clean the CWU-60/P in accordance with paragraph 5-419.

2. Conduct a Place-In-Service Inspection of the CWU-60/P coveralls in accordance with paragraph 5-414.

3. Repair the CWU-60/P, if required, in accordance with paragraph 5-421. Repair other components of the assembly as detailed in their specific sections.

4. Attach inflatable hood using 60-inch length of Type I nylon cord, seared at both ends.

a. Tie one end to hood eyelet using approximate 2-inch loop and a bowline knot.

b. Tie other end of nylon cord to coverall at top pocket small hole using approximate 3-inch loop and bowline knot.

5. Verify inspection and/or repair and/or fit.

6. Document in accordance with COMNAVAIRFORINST 4790.2.

5-416. LEAKAGE TEST.

NOTE

The leak test will be performed by an Aircrew Survival Equipmentman at the intermediate level.

5-417. TEST FIXTURE. Test fixture, P/N 1936AS100-1, shall be procured through the TYCOM.

NOTE

Commercially available petroleum jelly may be used on the threaded pipe to prevent leakage around the nut, gasket, and washer.

Neoprene rubber gasket can be locally manufactured as per Figure 5-55.

7. Verify inspection and/or repair and/or fit.

8. Document in accordance with COMNAVAIRFORINST 4790.2.

5-418. TEST PROCEDURE. To test the CWU-60/P Quick Donning Anti-Exposure Coverall for leakage, proceed as follows:

Materials Required

Quantity	Description	Reference Number
1	Test Fixture	See Para 5-417
As Required	Leak Tec Solution	MIL-L-25567 NIIN 00-621-1820

1. Loosen all straps.

2. Place test fixture inside suit at center of hood opening, with lower plate resting on inside of back of hood.

3. Loosen locking nut to allow upper portion of test fixture to be raised above the lower plate assembly. Pull slide fastener closed with the slider tight against the top stops. Lay the facial area opening of the suit flat against the lower plate assembly with the slider and pull tab as close to the center threaded rod as possible. See Figure 5-58.

4. Tuck slide fastener tab closed to the internal pipe thread (Figure 5-56) so that it lays in the circular opening in the rubber surrounding the internal pipe thread.

NOTE

Assure green cloth portion of hood is not caught between the rubber pads of the upper and lower plates.

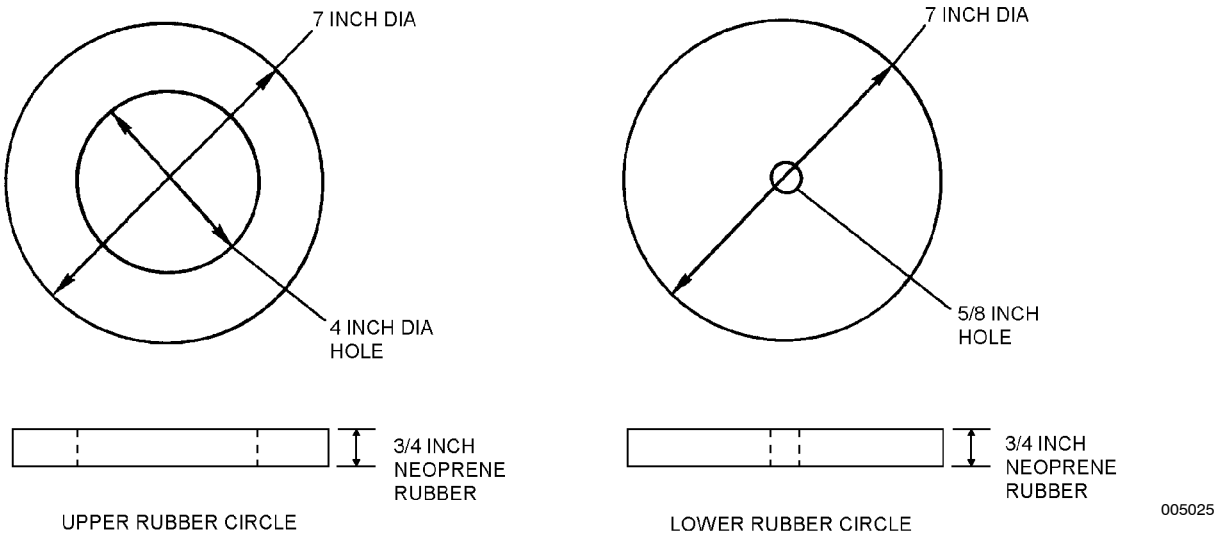

Figure 5-55. Rubber Circle Dimensions

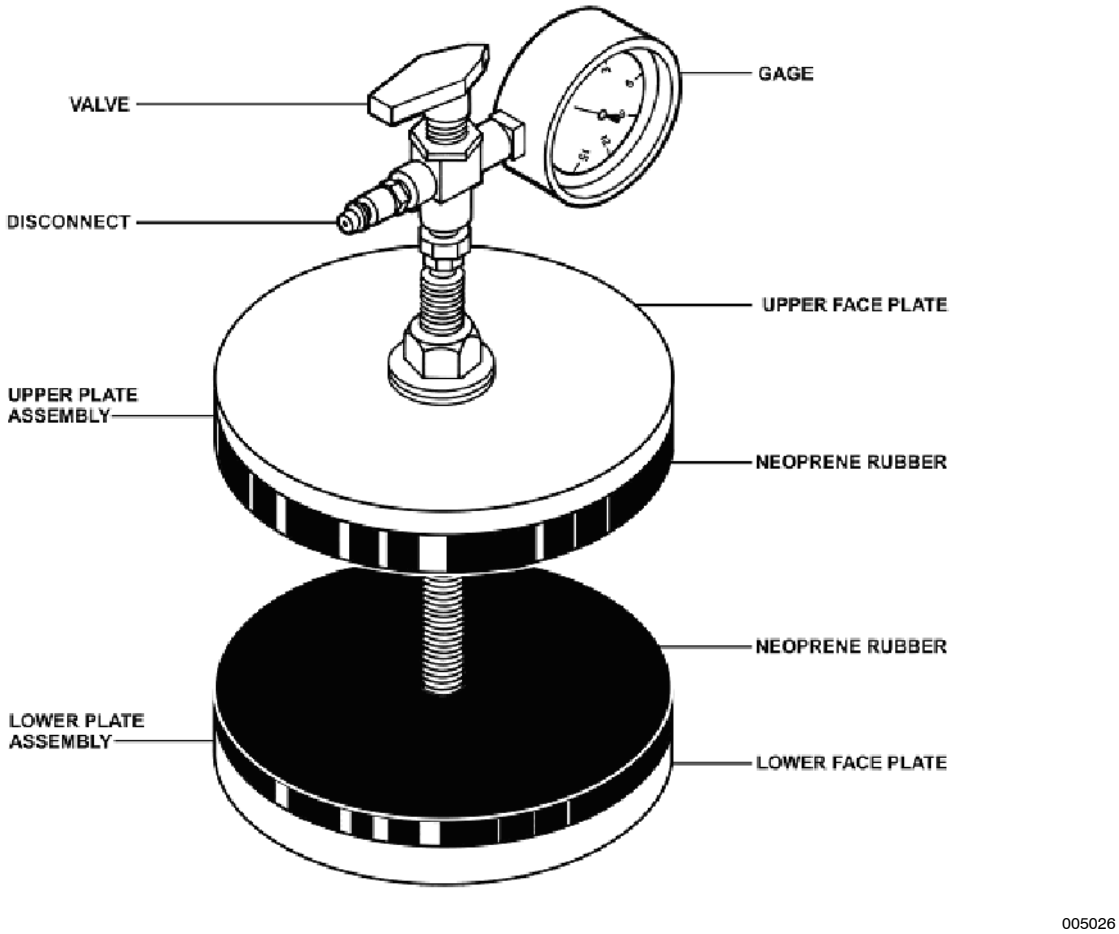

Figure 5-56. Leak Test Fixture (Assembled)

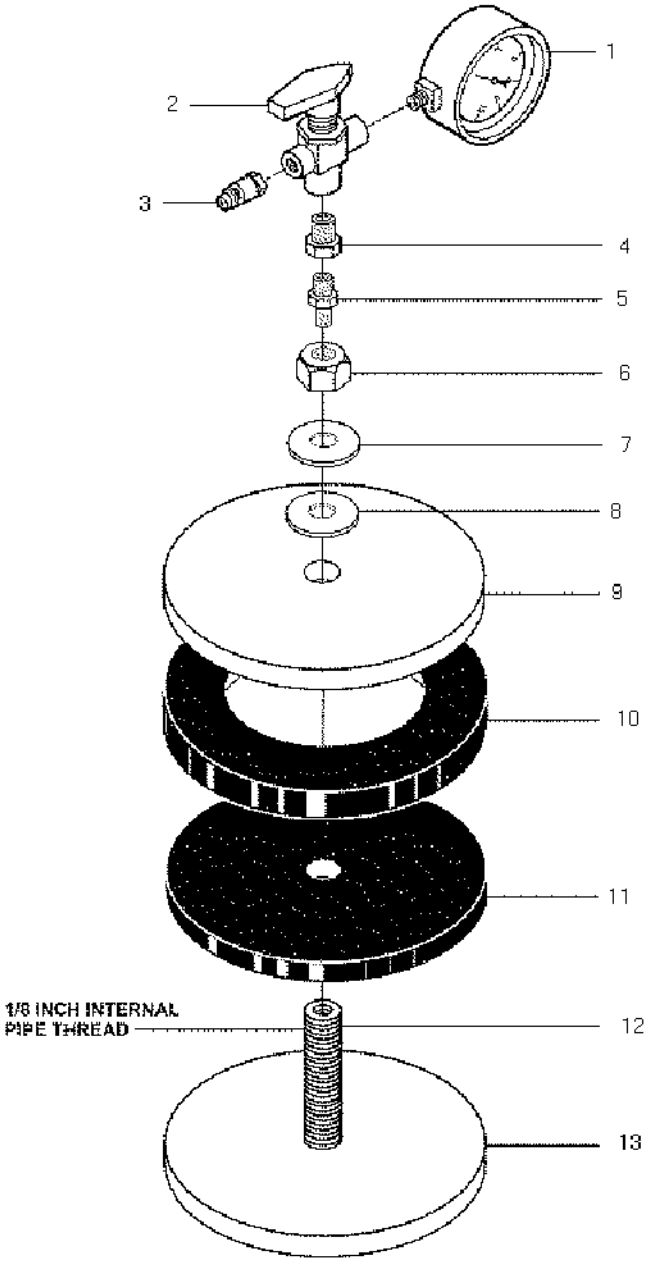

005027

Figure 5-57. Leak Test Fixture

Figure and Index Number	Part Number	Description 1 2 3 4 5 6 7	Units Per Assembly	Usable On Code
5-62	1936AS100-1	LEAK TEST FIXTURE	1	
-1	00-187-3143 or 00-919-3784	GAGE, Water Press., 0-15 Inches, 2 1/2 Inch Dial	1	
-2	B43XVF4	VALVE, 3-Way With Vent (12623)	1	
-3	MIL-C-4109	COUPLING, Air Hose (Male)	1	
-4	00-186-3024	BUSHING, Pipe Reducer	1	
-5	AN911-1J	NIPPLE, Pipe	1	
-6	MS51967-20	NUT, Hex, 5/8 Inch 11-UNC-2B	1	
-7	MS51412-12	WASHER	1	
-8	—	GASKET, Rubber, 1 5/8 Inch Outer Diameter, 1/2 Inch Inner Diameter (Note 1)	1	
-9	QQ-A-250/11	PLATE, 1/2 Inch x 7 Inch, Aluminum	1	
-10	7X.750-20-1	CIRCLE, Rubber, 3/4 Inch x 7 Inch, 4-Inch Center (76385)	1	
-11	7X.750-20-2	CIRCLE, Rubber, 3/4 Inch x 7 Inch, 5/8 Inch Center (76385)	1	
-12	98790A035	ROD, Steel, Threaded, 5/8 Inch, Hollow	1	
-13	QQ-A-250/11	PLATE, 1/2 Inch x 7 Inch, Aluminum	1	
	Notes: 1. Replacement for rubber gasket is locally manufactured of solid rubber (NSN 9230-00-241-9746). To manufacture replacement gasket, use a 1/2 inch punch, cutting, double bow (NSN 5110-00-180-0932) for the inner diameter and 1 5/8 inch punch, cutting, double bow (NSN 5110-00-540-5786) for the outside diameter.			

CAUTION

Assure pointer on 3-way valve is pointing toward gage when connecting air source.

5. Connect a dry, filtered, clean low pressure air source to the test fixture at the male quick disconnect fitting. Rotate the black pointer on the 3-way valve toward the air inlet and inflate the coverall for no more than 20 seconds. Rotate the black pointer in the direction of the gage to check the pressure in the coverall. (See Figure 5-59.) If the pressure is below six inches of water, turn pointer back toward air inlet letting in a small amount of air. If pressure is above six inches of water, turn the pointer to the bleed hole in the 3-way valve to bleed excessive pressure down to six inches of water. Check gage reading after 15 seconds. Leave pointer facing gage and observe gage for pressure drop. If gage pressure has dropped, tighten down nut on top plate.

6. If pressure continues to drop, apply Leak Tec solution around the outer edge of upper plate assembly and slide fastener. If a leak is present, deflate suit following steps 8 and 9 below and repeat steps 1 through 5. When confident that a good seal between test fixture and suit is made and pressure has been stabilized at 6 inches water pressure, leave suit at pressure for 5 minutes.

7. If pressure reading drops below 5 inches of water pressure during the 5 minute test period, check for leaks and structural damage over the entire outer surface area of the coverall with leak detection solution or soapy water. Mark any leak area.

8. Disconnect air source. Rotate pointer toward air inlet to release pressure in suit, loosen nut to dump pressure.

9. Remove faceplate assembly. Rotate pointer arrow toward gage to return gage reading to zero.

10. Allow suit to dry.

11. Repair if required in accordance with paragraph 5-421.

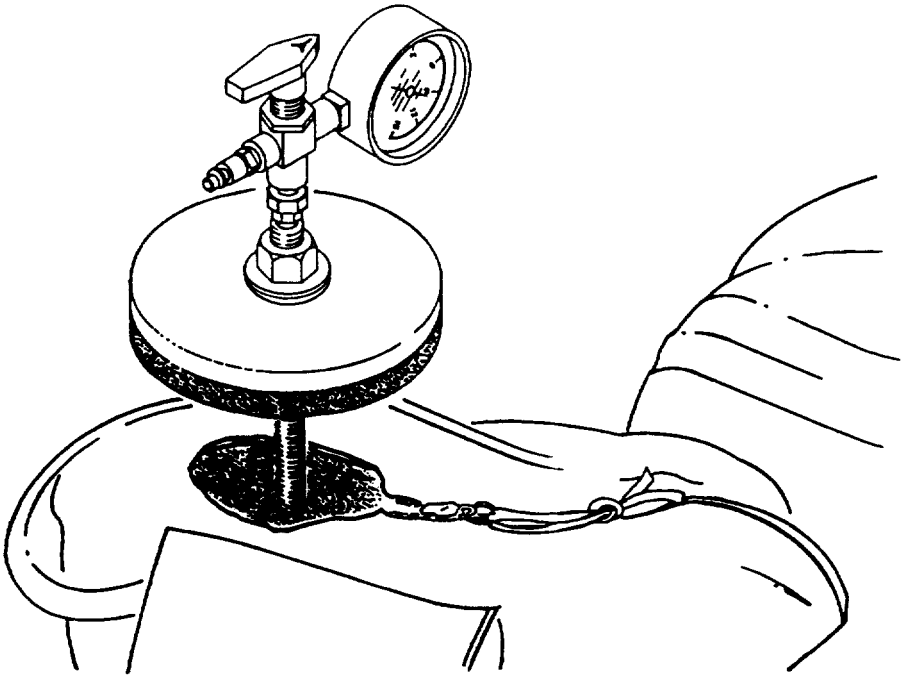

005028

Figure 5-58. Face Plate Assembly (Bottom Plate Inside Suit)

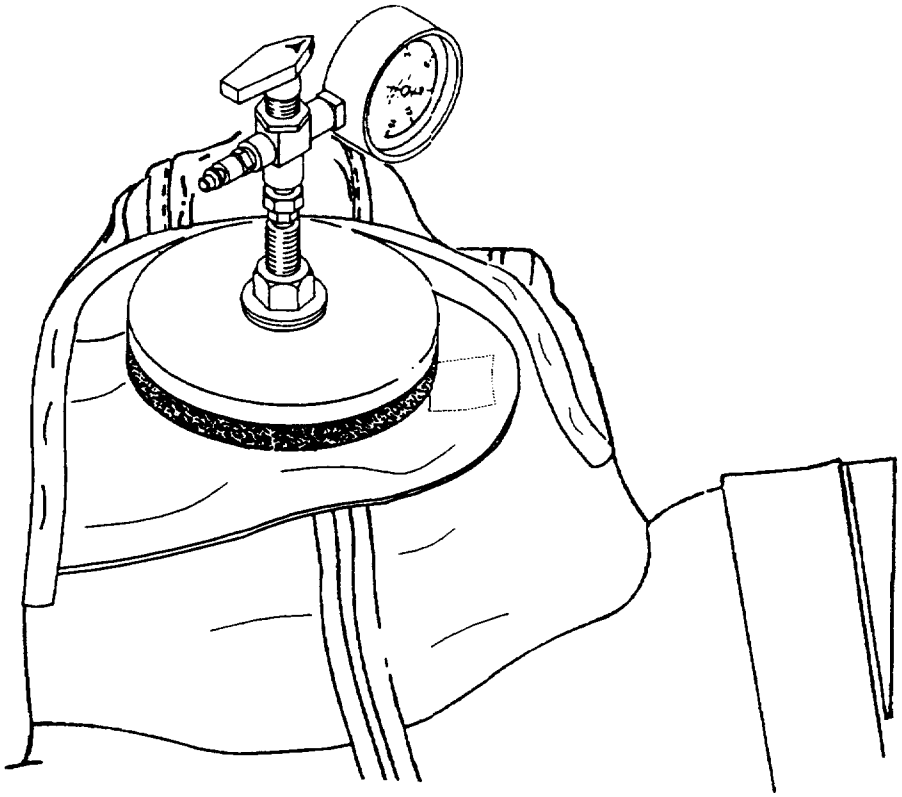

005029

Figure 5-59. Face Plate Assembly (Top and Bottom Plates Fastened Together)

12. Any suit repaired for leakage must be retested in accordance with steps 1 through 5.

13. Verify inspection and/or repair and/or fit.

14. Document in accordance with COMNAVAIRFORINST 4790.2.

5-419. CLEANING. To clean the CWU-60/P coverall, proceed as follows:

1. Hang coverall from a wooden hanger. Close entrance slide fastener.

2. Use 1/4 cup detergent to 3 gallons of water and scrub coverall with a soft non-metal bristle brush.

3. Rinse well with clean water.

4. Leak test in accordance with paragraph 5-418.

5. Open slide fastener and leave coverall hanging in a well ventilated area to dry.

CAUTION

Do not wring or squeeze suit to remove water.

6. After suit is dry, check for cleanliness.

5-420. STORAGE. When placing the CWU-60/P in seasonal storage, proceed as follows:

NOTE

CWU-60/P coverall shall be stored in an area where threat of contamination by fuel/oil is not present and where temperature will not exceed 150°F.

1. Open entrance slide fastener.

2. Close face flap.

Table 5-35. Repairs and Fabrications

Repair/Fabrication	Paragraph
Repairing Snags, Tears, and Punctures	5-422
Repairing Seam Tape	5-423
Repairing Stowage Bag	5-424
Patching CWU-60/P Hood	5-425
Fabricate Reflective Tape Assemblies	5-426
Repair Cinches and Thumb Loop	5-427

3. Confirm that waist, wrist, and ankle cinches are loosened to their maximum length.

4. Hang from wooden coat hanger.

5. Verify inspection and/or repair and/or fit.

6. Document in accordance with COMNAVAIRFORINST 4790.2.

5-421. REPAIRS AND FABRICATIONS. Instructions for performing authorized repairs and fabrications to maintain the CWU-60/P in the Ready For Issue (RFI) condition can be found in the following paragraphs. Only the repairs listed in Table 5-35 are authorized.

5-422. REPAIRING SNAGS, TEARS AND PUNCTURES. To repair damaged neoprene foam material, proceed as follows:

Materials Required

Quantity	Description	Reference Number
As Required	Toluene	TT-T-548 NIIN 00-579-8431
As Required	Cloth, Nylon Chloroprene Coated Type I, USAF Green No. 1511	MIL-C-19002 NIIN 00-935-1759
As Required	Sheeting, Anti-Exposure Neoprene, 1/8-Inch Thick	NIIN 00-009-0451
As Required	Adhesive, Class 3, Polychloroprene (Note 1)	MIL-A-5540 NIIN 00-515-2246
As Required	Coat Hanger	—
As Required	Adhesive, Neoprene Color: Neutral	P/N 1041 NIIN 00-440-5603
1	Hand Roller	GGG-R-00620 NIIN 00-243-9401

Notes: 1. Adhesives may come from supply that contain both a base adhesive and an accelerator. Mixing of the accelerator with the base adhesive is not recommended for use on any items requiring adhesive in this manual. Use only the base adhesive.

WARNING

Do not use toluene near heat, sparks or open flame. Avoid prolonged contact with skin or breathing of fumes. Use only in a well ventilated area.

CAUTION

Clean only coated side of cloth with toluene. Toluene may damage equipment if not used with care. Avoid all contact with areas not to be cleaned. Wipe up excess spills immediately.

NOTE

All snags, tears and punctures which do not exceed length limitations shall be cemented as well as patched.

For repairs on glove/mitten assembly see Table 5-36.

1. Repair of Linear Tears. Linear tears may be repaired if tear does not exceed 2 1/2 inches in length.

a. Measure and ensure tear is 2 1/2 inches or less.

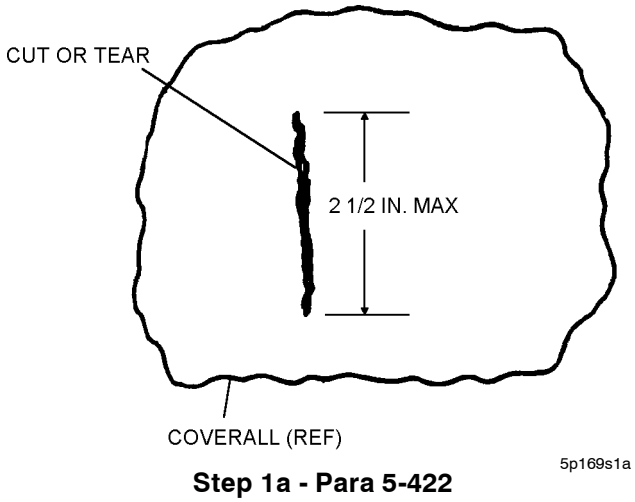

Step 1a - Para 5-422

b. Using MIL-C-19002, cut a rectangular patch with rounded edges 1 inch larger than the damaged area on all sides.

c. Turn coverall inside out and clean patch and area around damage with toluene.

d. Apply three coats of seal adhesive to each side of the linear tear.

e. While the third coat of adhesive is still tacky, butt the torn edges together. Let adhesive dry for about 15 minutes.

f. Apply three coats of MIL-A-5540 adhesive to the coverall and the coated side of the patch, allow adhesive to extend slightly beyond the damaged area. Allow 15 minutes drying time between coats.

g. When last coat is tacky, apply patch to damaged area.

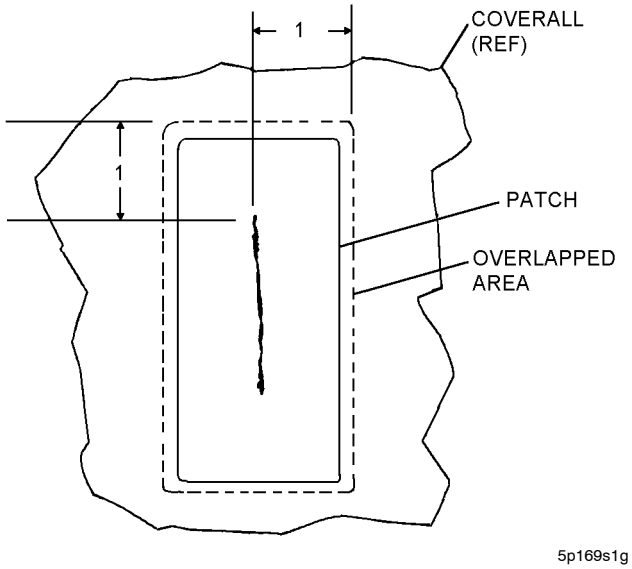

Step 1g - Para 5-422

h. Roll out bubbles with roller.

NOTE

Talcum powder prevents adhesive from bonding. If other areas are to be cemented, avoid getting talcum on those areas. If in doubt about presence of talcum powder, sponge the area with water first and allow to dry before cementing.

i. Dust cemented area with talcum powder and turn suit right side out.

j. Allow adhesive to cure 48 hours before performing leak test.

k. Perform leakage test in accordance with paragraph 5-416.

2. Verify inspection and/or repair and/or fit.

3. Document in accordance with COMNAVAIRFORINST 4790.2.

4. Repair of Snags and Three Corner Tears. Snags or three corner tears may be repaired if they do not exceed 1 inch in length on the long leg of the tear.

a. Measure and ensure snag is 1 inch or less in length in all directions.

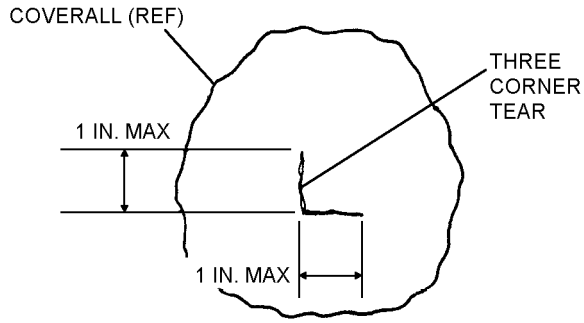

Step 2a - Para 5-422

b. Using MIL-C-19002, cut a square with rounded corners 1 inch larger than the damaged area in all directions.

c. Turn coverall inside out and clean patch and area around damage with toluene.

d. Apply three coats of seal adhesive to each edge of the three-corner tear.

e. While the third coat is still tacky, butt the turn edges together. Let adhesive dry for about 15 minutes.

f. Apply three coats of MIL-A-5540 adhesive to coverall and coated side of patch. Allow adhesive to extend slightly beyond the damaged area. Allow 15 minutes drying time between coats.

g. When last coat is tacky apply patch to damaged area.

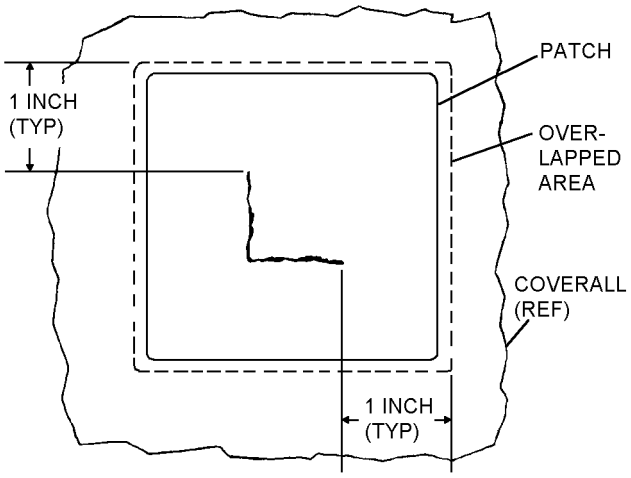

Step 2g - Para 5-422

h. Roll out bubbles with wooden roller.

NOTE

Talcum powder prevents adhesive from bonding. If other areas are to be cemented, avoid getting talcum on those areas. If in doubt about presence of talcum powder, sponge the area with water first and allow to dry before cementing.

i. Dust cemented area with talcum powder and turn suit right side out.

j. Allow adhesive to cure 48 hours before performing leak test.

k. Perform leakage test in accordance with paragraph 5-416. Verify leak test results, pressure and leakage, if any.

5. Verify inspection and/or repair and/or fit.

6. Document in accordance with COMNAVAIRFORINST 4790.2.

7. Repair of Punctures. Punctures or circular holes may be repaired if they do not exceed 1 inch in diameter.

a. Measure and ensure puncture or circular hole is 1 inch in diameter or less.

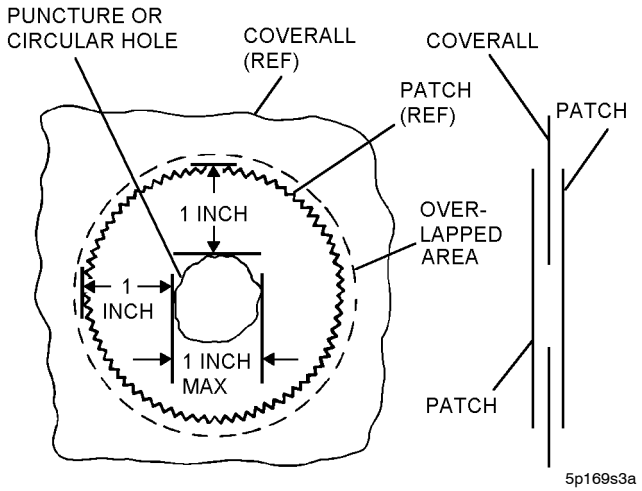

Step 3a - Para 5-422

b. Cut two circular patches of MIL-C-19002, one for each side of the fabric. Cut the patches one inch larger than the hole. If the hole is larger than 1/2 inch, cut a plug of neoprene the size of the hole.

c. Turn coverall inside out and clean patch and area around damage with toluene.

d. If a plug is to be used, apply three coats of seal adhesive to the edges of the hole and to the sides of the plug. When the third coat is still tacky, butt the edges of the neoprene together. Let dry for 15 minutes.

e. Apply three coats of adhesive to coverall, and coated side of patch, allow adhesive to extend slightly beyond the damaged area. Allow 15 minutes drying time between coats.

f. When last coat is tacky apply patch to damaged area.

g. Roll out bubbles with roller.

NOTE

Talcum powder prevents adhesive from bonding. If other areas are to be cemented, avoid getting talcum on those areas. If in doubt about presence of talcum powder, sponge the area with water first and allow to dry before cementing.

h. Dust cemented area with talcum powder and turn suit right side out.

i. Apply outside patch in same manner. Dust area with talcum powder.

j. Allow adhesive to cure 48 hours before performing leak test.

k. Perform leakage test in accordance with paragraph 5-416.

8. Verify inspection and/or repair and/or fit.

9. Document in accordance with COMNAVAIRFORINST 4790.2.

5-423. REPAIRING SEAM TAPE (SUPPORTED OR UNSUPPORTED). To recement or replace tape, proceed as follows:

Materials Required

Quantity	Description	Reference Number
As Required	1-Inch Cloth Supported Polychloroprene Tape, Type III	MIL-C-19002 NIIN 00-078-2958
As Required	3/5-Inch Unsupported Polychloroprene Tape, Type III	MIL-C-23926 NIIN 00-045-8113
As Required	Adhesive, Polychloroprene Class 3 (Note 1)	MIL-A-5540 NIIN 00-515-2246
As Required	Talcum Powder	MIL-T-50036

Notes: 1. Adhesives may come from supply that contain both a base adhesive and an accelerator. Mixing of the accelerator with the base adhesive is not recommended for use on any items requiring adhesive in this manual. Use only the base adhesive.

NOTE

On all repairs, apply three coats of adhesive to both tape and coverall. Allow 15 minutes between coats. When areas are tacky, apply tape (supported or unsupported). Roll entire tape down firmly ensuring any trapped air is forced out. Apply a light coat of talcum powder.

1. If tape is loose and undamaged, recement tape to coverall.

NOTE

When replacing damaged or missing tape ensure replacement tape ends are rounded off.

2. If tape is missing, measure and fit a replacement tape to the area, and cement in place. Overlap tape ends a minimum of 1 inch.

NOTE

If seam being repaired is straight, use the cloth-supported tape. Use the unsupported tape if the seam being repaired is curved. This helps make the application easier. Use care when applying. Do not stretch the tape.

3. If tape is damaged, peel damaged tape from coverall. Replace with new tape. Overlap tape ends a minimum of 1 inch.

4. If seams leak, repair leak and apply new tape to area.

5. Allow adhesive to cure 48 hours before performing leak test.

6. Perform leak test in accordance with paragraph 5-416.

7. Verify inspection and/or repair and/or fit.

8. Document in accordance with COMNAVAIRFORINST 4790.2.

5-424. REPAIRING THE STOWAGE BAG. To repair the stowage bag, proceed as follows:

NOTE

If a damaged area exceeds 6 inches in any direction or if the markings are damaged, procure a new storage bag through supply. P/N 1510AS200-1.

Materials Required

Quantity	Description	Reference Number
As Required	Fabric, Type III Class III	MIL-C-7129 NIIN 01-173-4436
As Required	Thread, Nylon, Size E, Sage Green	V-T-295 NIIN 00-204-3884
As Required	Snap, Nickel, Cap	NIIN 00-276-4953
As Required	Snap, Nickel, Post	NIIN 00-276-4969
As Required	Snap, Nickel, Socket	NIIN 00-276-4946
As Required	Snap, Nickel, Stud	NIIN 00-175-2923
As Required	Webbing, Nylon, Sage Green Type IV, 1 Inch Wide	MIL-T-5038 NIIN 00-261-8579

NOTE

All stitching shall be in accordance with ASTM-D-6193, Type 301 lockstitch using 7 to 10 stitches per inch with 1-inch minimum backstitching or overstitching.

1. Loose or broken stitching shall be repaired by restitching.

2. Small holes and tears, up to 1/2 inch in length or diameter may be mended and/or darned on a sewing machine.

NOTE

To repair holes and/or tears larger than 1/2 inch in diameter or length, use patches.

3. To patch, cut two pieces of cloth at least 1 inch larger than the damaged area in all directions. Turn the edges of first patch under 1/4 inch. Center the patch over the damaged area on inside of bag and sew 1/8 inch from the folded edge. Turn the edges of the second patch under 1/4 inch. Center over damaged area on outside of bag and stitch through all thicknesses 1/8 to 1/16 of an inch from the edge.

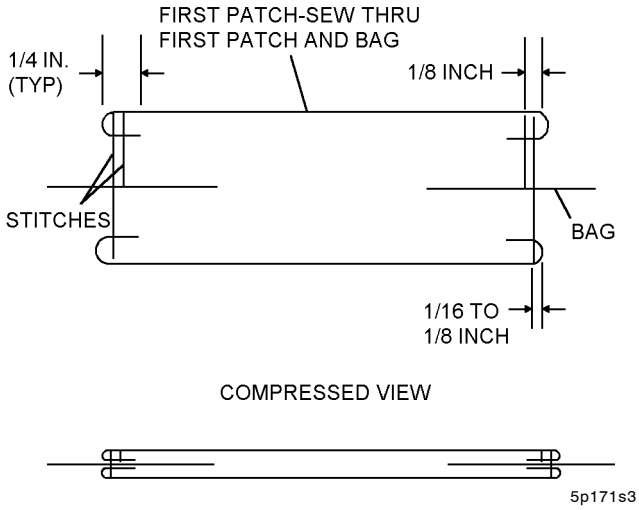

Step 3 - Para 5-424

4. To replace snaps, patch damaged areas as shown in step 3. Replace the portion of the missing snap using the snap crimper.

5. If handle of the stowage bag is broken, remove old handle.

NOTE

If the attachment area is damaged, repair in accordance with step 3.

6. If the attachment area is not damaged, cut 8 1/2 inches of 1-inch wide MIL-T-5038 webbing and cross-box stitch onto bag 6 inches apart at the base.

7. Verify inspection and/or repair and/or fit.

8. Document in accordance with COMNAVAIRFORINST 4790.2.

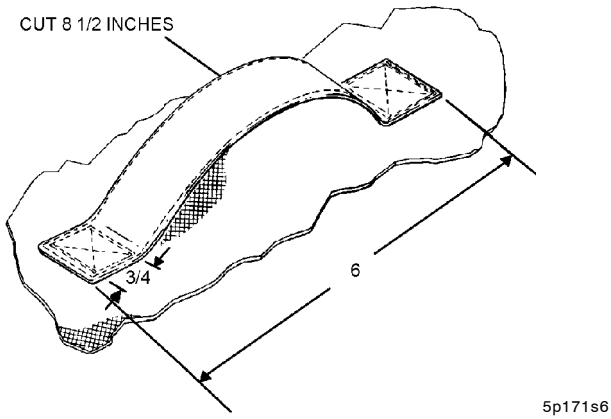

Step 6 - Para 5-424

5-425. PATCHING CWU-60/P HOOD. To apply 2-inch diameter patches or seam tape patches, proceed as follows:

Materials Required

Quantity	Description	Reference Number
1	Sewing Machine, zigzag single or double throw	—
As Required	Thread, Nylon, Size E, Sage Green, Olive Drab	V-T-295 NIIN 00-204-3884 or equivalent
1	Sealer, heat, seam and patch	MIL-S-85634 NIIN 01-186-7869
As Required	Patch, 2-inch diameter	NIIN 01-192-2489
As Required	Seam Tape, 1 1/2 -or- 7/8-Inch	NIIN 01-193-0469 -or- NIIN 01-189-6361

Materials Required (Cont)

Quantity	Description	Reference Number
1	Hand Roller	GGG-R-00620
1	Torque Wrench 0-100 lb-in	

NOTE

Ensure coverall is thoroughly dry prior to patching. Round off corners of seam tape prior to application. All patching shall extend a minimum of 1/2 inch beyond damaged areas. Patches may be overlapped to achieve this margin. Tears 1/2 inch or greater in length will be closed with zigzag stitching prior to application of patches. Zigzag stitching shall be single or double throw, 5 to 7 stitches per inch (measured on one side of throw), using size E, sage green nylon thread. Width of stitches shall vary with smoothness of the tear.

1. Close tears with Type 301 zigzag machine stitching.

WARNING

Prior to application of seam tape, Aircrew Survival Equipmentman must be familiar with heat sealing machine operating procedures in NAVAIR 17-10DC-1. Do not allow any coverall material threads or sewing machine thread to protrude from under the seam tape.

2. Turn the heat sealer on and wait 10 minutes for the thermometer to stabilize at 300°F. Do not overheat.

NOTE

Temperature is critical. Do not overheat. Cement may evaporate/deteriorate.

3. Center the area to be patched on the anvil pad, ensuring only one layer of fabric is on the anvil and there are no wrinkles in the fabric.

4. Center the patch, film side down, on the damaged hood fabric.

5. Lower the heat platen and lock it in place.

6. Smooth out wrinkles and air pockets with a hand roller.

NOTE

Patches may be overlapped and shall extend at least 1/2 inch beyond the damaged area.

7. Verify inspection and/or repair and/or fit.

8. Document in accordance with COMNAVAIRFORINST 4790.2.

5-426. FABRICATION OF REFLECTIVE TAPE ASSEMBLIES. To fabricate the reflective tape assemblies, proceed as follows:

Materials Required

Quantity	Description	Reference Number
As Required	Nylon Thread, Size E, Sage Green, Olive Drab, or Black	V-T-295 NIIN 00-616-0079 or equivalent
As Required	Reflective Sheeting 2-Inch Wide, Silver	NIIN 01-398-6939
As Required	Reflective Sheeting 2-Inch Wide, Red-Orange	NIIN 01-283-7890
As Required	Fastener Tape, Hook Class 2, 2-Inch Wide	NIIN 00-926-4931

1. Select the desired piece of adhesive backed reflective sheeting and cut a piece of Hook Fastener Tape to equal the length of the reflective sheeting.

NOTE

There should be one silver and one red-orange reflective tape assembly on each pile fastener area. (See Figure 5-54.)

2. Neatly attach them (reflective sheeting and hook tape) together back to back. Make all corresponding reflective sheeting and hook tape edges aligned with each other.

3. Using Type 301 lockstitch, sew the tape and adhesive backed sheeting together to obtain a stronger permanent attachment. Round the corners to approximately a 1/4-inch radius.

4. Verify inspection and/or repair and/or fit.

5. Document in accordance with COMNAVAIRFORINST 4790.2.

5-427. REPAIRING CINCHES AND THUMB LOOPS.

Materials Required

Quantity	Description	Reference Number
As Required	Nylon Webbing Type IV	NIIN 00-261-8579
As Required	Nylon Thread, Size E, Sage Green, Olive Drab, or Black	V-T-295 NIIN 00-616-0079 or equivalent
As Required	Bead Cinch	SK23112-1, -2, or -3 Conax Corp, 2300 Walden Ave. Buffalo, NY 14225 or equivalent

1. Repair cinches as follows:

a. Cut off the damaged webbing. Leave as much original material as possible to attach a replacement piece to.

b. Make the replacement webbing long enough to equal the original length of the cinch after loose ends are overlapped and crossbox stitched (1/2-inch crossbox stitch or larger) together. (See Figure 5-60.)

2. Repair thumb loop as follows:

a. Cut off the worn/damaged nylon webbing. Leave as much old material as possible to attach a replacement piece to.

b. The replacement webbing shall be cut long enough so that the original length of the Thumb Loop can be maintained when the loose ends are overlapped and crossbox stitched. Sear ends of webbing.

3. Verify inspection and/or repair and/or fit.

4. Document in accordance with COMNAVAIRFORINST 4790.2.

Table 5-36. Types of Repairs on Glove/Mitten Assembly

Type of Damage	Condition	Procedure
1. Tears on glove	1-inch or less in palm area or in the back	Repair by placing a patch on the inside of the damaged area. Refer to para 5-422.
2. Rips or tears in Mitten Assembly	2 inches or less	Repair by butting damaged areas together with adhesive. Refer to para 5-422.
3. Wrist pad elastic hold down		Repair as need with (MIL-C-85163) Elastic by box-stitching the replacement elastic onto old remains of hold down. Use essentially the same procedure as para 5-427.

5-428. REPAIR AND REINFORCEMENT OF FACE SHIELD FOR CWU-60/P, QUICK DONNING ANTI-EXPOSURE COVERALL.

NOTE

Due to the inherent weakness of the neoprene face shield fabric, all CWU-60/P Anti-exposure Coveralls shall have this reinforcement procedure completed.

Materials Required

Quantity	Description	Reference Number
As Required	Fabric, Patching (Notes 1 and 2)	—
As Required	Adhesive, Polychloroprene (Note 3)	MIL-A-5540 NIIN 00-515-2246
As Required	Talc	MIL-T-55036 NIIN 01-080-9589
As Required	Pencil, Wax Orange Red White Yellow	A-A-87 NIIN 00-268-9483 NIIN 00-282-3375 NIIN 00-240-1525 NIIN 00-264-4612 or equivalent
As Required	Brush, Acid	A-A-289 NIIN 00-514-2417

Notes: 1. Precut face shield patching fabric shall be procured at no cost to the requesting activity from:
NAWCAD
Code 4.6.3.3, Bldg. 2187, Suite 1240
48110 Shaw Road, Unit 5
Patuxent River, MD 20670-1906

2. Requesting activities shall provide their return address and quantity required.
3. Adhesives may come from supply that contain both a base adhesive and an accelerator. Mixing of the accelerator with the base adhesive is not recommended for use on any items requiring adhesive in this manual. Use only the base adhesive.
4. Photographs of the modified CWU-60/P can be found at https://pma202.navair.navy.mil, personal protective equipment "DOCUMENTS".

1. Lay coverall on a flat surface in a well ventilated area, with the head positioned toward the technician with the face shield facing up.

2. Using locally available newspaper, foam, etc., fill the hood of the coverall to provide a smooth surface for applying repair patch.

3. Remove face flap (Figure 5-54) from the face shield at the base of the face flap. Be careful not to cut the face flap off to close to the seam.

4. Place precut repair patch over face shield with the white side toward the coverall face shield, green side up, and trace outline of outer edge of patch onto face shield, using chalk or china marking pencil.

5. Using polychloroprene adhesive, coat the surface of the face shield with 2 coats of adhesive.

a. Apply first layer of adhesive in a right to left application.

b. Apply second layer of adhesive in an up and down application. Let dry. See adhesive container for correct drying time.

6. Apply 2 layers of adhesive to the white surface of the repair patch using the procedures noted in step 5a and 5b.

7. Let both surfaces get tacky.

NOTE

In order to properly apply the repair patch, it is recommended that 2 people are used to complete the repair from this point forward.

8. Ensure that the adhesive coated patch does not to come in contact with the face shield prior to proper alignment. Start at the top of the face shield and slowly work one side of the repair patch down at a time.

9. Use the previously traced markings on the face shield to aid in proper alignment.

10. After one side of the patch is applied, repeat the process with the other side of the repair patch.

11. Ensure the repair patch is not stretched extensively while applying to face shield.

12. Upon completion of repair, allow the adhesive to cure for a minimum of 24 hours.

13. Verify inspection and/or repair and/or fit.

14. Document in accordance with COMNAVAIRFORINST 4790.2.

5-429. PACKING AND FOLDING PROCEDURE. To pack the CWU-60/P, proceed as follows:

Materials Required

Quantity	Description	Reference Number
As Required	Lubricant Stick	Zipperease NIIN 00-999-7548

CAUTION

The CWU-60/P must be completely dry before packing.

1. Lay out all components. Ensure that suit has been dusted with talc and slide fasteners have been treated with Zipper Ease, ZE-2. Run along slide fastener teeth.

2. Open entrance slide fastener fully.

3. Completely deflate coverall and HGU-32/P hood. Cut and sear the ends of a 60-inch length of Type 1 Nylon Cord. Tie one end to the grommet installed in the HGU-32/P Hood using an approximate 2-inch bowline knot. Tie the other end of the nylon cord, in the same manner, to the grommet in the thigh pocket of the coverall.

WARNING

To enable an aircrewmember to don the CWU-60/P easily in an emergency, the suit shall be packed into the carrying case right side out with the entrance slide fastener fully opened.

4. Stow mittens in retaining straps on the sleeves.

5. Secure face flaps on pile patch on back of the hood.

6. With right side out, place coverall face down and fold sleeves across back.

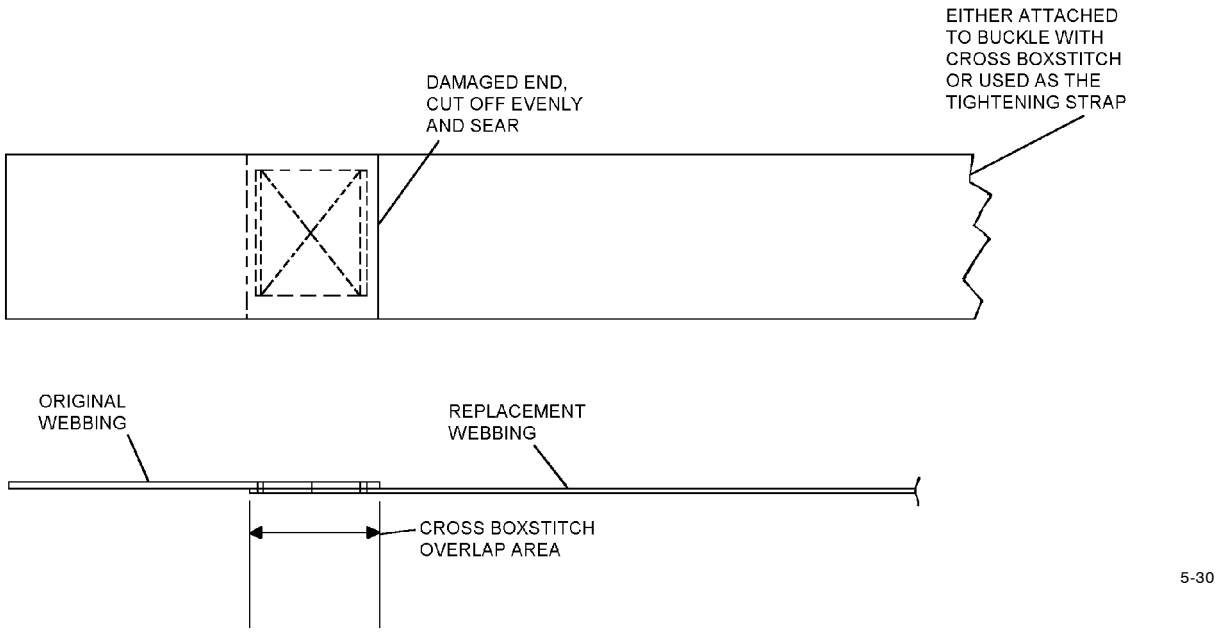

Figure 5-60. Cinches and Thumb Loop Repair

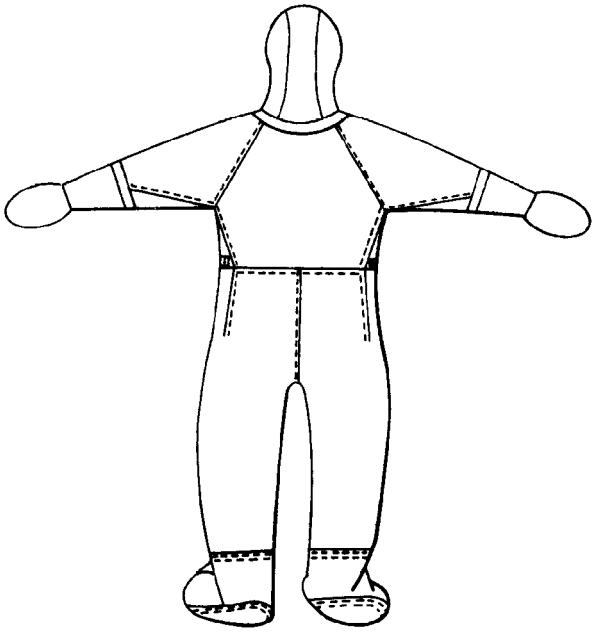

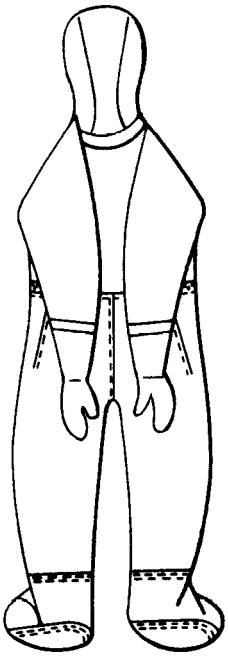

5p175s6

Step 6 - Para 5-175

7. Fold the right side of coverall over left. The coverall entrance slide fastener shall be in the full open position. Fold boots flat prior to rolling.

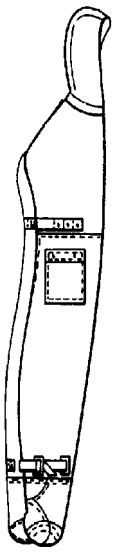

5p175s7

Step 7 - Para 5-175

8. Roll coverall tightly, starting with the boots.

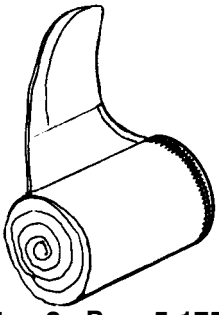

5p175s8

Step 8 - Para 5-175

9. Insert coverall into carrying case and snap closed.

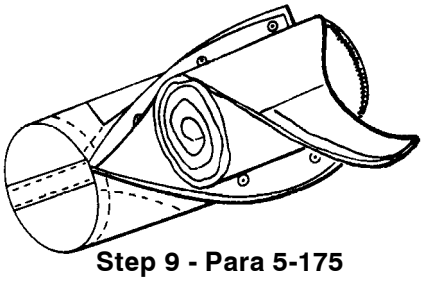

5p175s9

Step 9 - Para 5-175

10. The CWU-60/P shall be stowed onboard the aircraft in such a way as to be readily accessible to an aircrewmember.

11. Bunching of suits, stowage near heaters and in places where they will interfere with normal operations shall not be permitted. This practice could damage the suit, preventing it from proper operation. Check current aircraft NATOPS manual for storage instruction.

Section 5-9. Commercial Non-Vented Wet Suit

5-430. GENERAL.

5-431. The wet suit assembly is an exposure protective assembly for continuous wear and will protect the aircrewmember from exposure to cold, water, wind, and spray resulting from emergency egress from an aircraft at sea. The wet suit, after being modified to the procedures in this section, will incorporate a ventilation system which is used in conjunction with a conditioned or ambient air source.

5-432. CONFIGURATION.

NOTE

Due to the wide variety of commercially obtained wet suits that have been made available, it would be impossible to cover every known suit in existence. Two of the most basic and common configurations are shown in Figure 5-61 and Figure 5-62.

5-433. Single or two-piece wet suits are available in four basic sizes. See Table 5-37.

5-434. SUPPLEMENTARY EQUIPMENT.

5-435. UNDERWEAR. Wear only aramid underwear, CWU-43/P Drawers and CWU-44/P Undershirt.

5-436. ANTI-EXPOSURE MITTENS AND HOOD. If applicable, refer to Sections 3-35 for mittens and 3-37 for hood.

5-437. APPLICATION.

5-438. When authorized by the cognizant Type Commander, the modified commercial wet suit is worn by aircrewmember for flight operations where climatic conditions warrant. The commercial non-vented wet suit shall be worn by an aircrewmember for flight operations in accordance with the climatic and operational requirements established by the NATOPS General Flight and Operational Instructions Manual OPNAVINST 3710.7 Series.

5-439. MAINTENANCE.

5-440. Maintenance operations shall be performed by organizational level or above. All maintenance actions and inspections shall be documented in accordance with COMNAVAIRFORINST 4790.2.

5-441. SERVICE LIFE. The commercial wet suit shall remain in service until it is beyond economical authorized repair or until directed to remove from service by this manual.

5-442. PREFLIGHT INSPECTION. The Preflight Inspection shall be performed by the aircrewmember prior to each flight and shall consist of the following:

Table 5-37. Basic Sizing Chart

	Small	Medium	Large	Extra Large
Chest	35 - 37	37 - 40	40 - 42	42 - 45
Waist	29 - 33	32 - 35	34 - 37	37 - 41
Weight	130 - 155	150 - 180	170 - 200	200 - 235
Height	64 - 168	67 - 72	70 - 74	72 - 76
Dimensions in inches; weight in pounds				

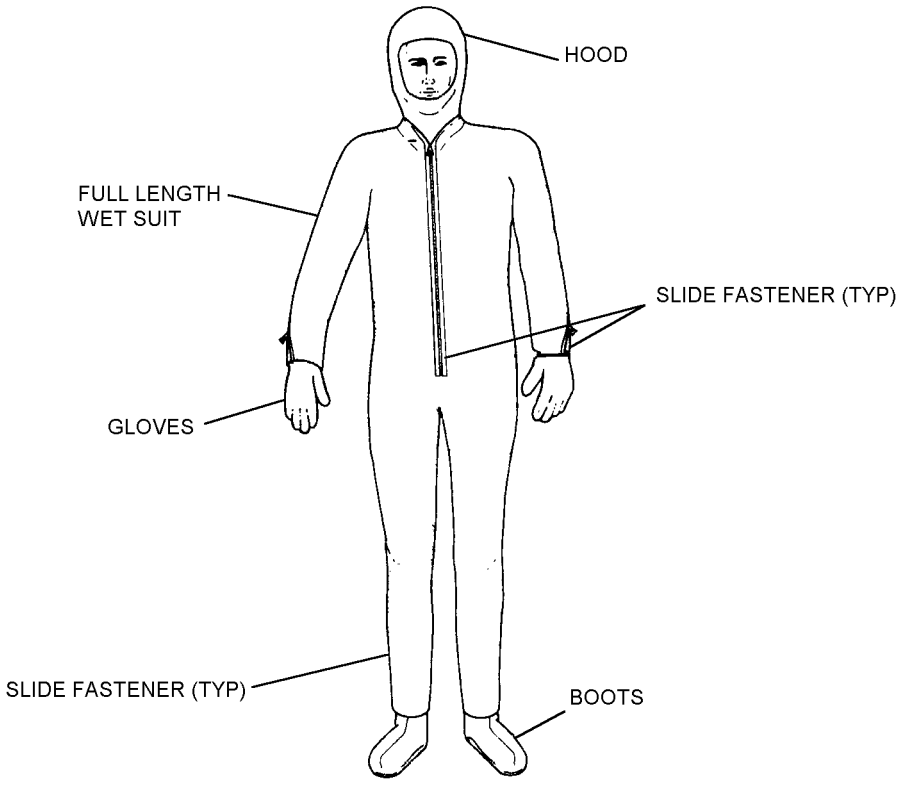

5-18

Figure 5-61. Full-Length Wet Suit

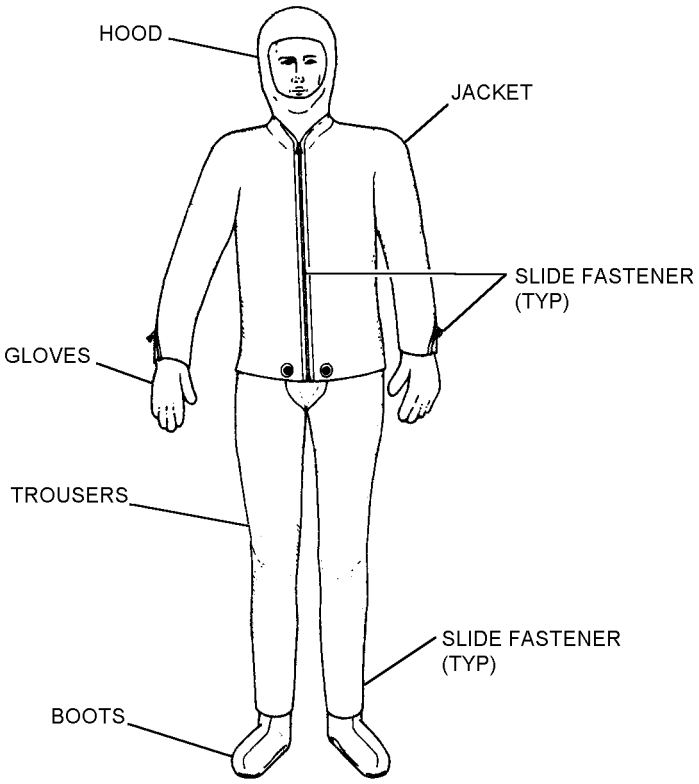

5-19

Figure 5-62. Two-Piece Wet Suit

1. Assembly for cuts, tear, abrasions, and deteriorations.

2. Seams for separation, stitching, cuts, and tears.

3. Inspect for corrosion and proper operation of the entrance, sleeve and leg slide fasteners.

4. Vent air inlet port (if installed) for corrosion and security of fittings.

5. Inspect hook and pile tape (if installed) for security of attachment.

5-443. If any discrepancy is noted, return to Aviator's Equipment Branch for a periodic inspection.

5-444. POSTFLIGHT MAINTENANCE. This maintenance may be performed by the aircrewmember. After each use, hang wet suit on a wooden hanger in a position allowing legs and arms to hang free of obstruction in a cool, dry, and well-ventilated area.

5-445. SPECIAL INSPECTION. The Special Inspection shall be performed by organizational level or above upon issue prior to placing the wet suit in service and every 90 days thereafter. The Special Inspection shall also be performed prior to placing the assembly in storage and when removed from storage. Only authorized repairs shall be made. To perform the Special Inspection proceed as follows:

Materials Required

Quantity	Description	Reference Number
As Required	Lubricant Stick	Zipperease NIIN 00-999-7548

1. Assembly for cuts, tears, abrasions, and deterioration.

2. Seams for separation, stitching, cuts, and tears.

3. Entrance, sleeve, and leg slide fasteners for proper operation and corrosion (if applicable and if needed). Apply coating of lubricant using lubricant stick to slide fastener chains.

4. Inspect vent air fitting (if installed) for corrosion. Inspect fitting for looseness by grasping and jerking.

5. Inspect hook and pile tape (if installed) for security of attachment.

6. If discrepancies are noted, wet suit shall be repaired.

7. The wet suit shall be cleaned by the aircrewmember in accordance with paragraph 5-446.

5-446. CLEANING. To clean the wet suit, proceed as follows:

1. To clean assembly, shower washing with mild soap is recommended.

CAUTION

Do not wring; do not damage ventilation ducts.

2. To dry assembly, hang on a wooden hanger in a position allowing legs and arms to hang free of obstruction in a cool, dry, and well-ventilated area.

5-447. STORAGE. When storing the wet suit, proceed as follows:

CAUTION

Sufficient quantity of cellulosic material conforming to PPP-C-843, Type II, Class A or B must be inserted at folds to prevent cracking.

1. All slide fasteners (if applicable) shall be in fully closed position.

2. Hang wet suit on a wooden hanger in a position allowing legs and arms to hang free of obstruction in a cool, dry, and well-ventilated area.

5-448. REPAIRS/FABRICATIONS/INSTALLATIONS. Instructions for performing authorized repairs, fabrications, or installations to maintain the wet suit in a Ready For Issue (RFI) condition can be found in the following paragraphs. Only the repairs/fabrication/installations listed in Table 5-38 are authorized.

5-449. Repairing Holes, Tears, and Surface Cracking. To repair holes, tears, and cracks, apply a small amount of neoprene adhesive to the torn edges, allow 10-minute tack-time, and butt edges together. Surface cracking can be repaired by applying cement to affected areas.

5-450. Replacing Entrance Leg and Sleeve Slide Fasteners. To replace slide fasteners, proceed as follows:

1. Remove fasteners pile tape carefully with a small amount of solvent, if necessary, to prevent severe tearing of foam material.

2. Cut stitches of old slide fastener and remove.

CAUTION

Do not stretch material as it feeds through machine or slide fastener will not finish at the desired point.

3. Sew in new slide fastener.

4. Replace fastener pile tape (if applicable).

5-451. Recementing Loose Pile Tape. Use standard cementing procedures to recement loose pile tape.

5-452. INSTALLATION OF VENTILATION SYSTEM FOR COMMERCIAL NONVENTED WET SUITS. To install ventilation system on commercially procured, full-length, or two-piece nonvented suits, proceed as follows:

Materials Required

Quantity	Description	Reference Number
As Required	Cloth, Coated and Laminated (19 oz/yd^2) Type I, Color: Orange	MIL-C-23926
As Required	Trilok Spacer Material	Style 6009-1-1 (CAGE 02934)

Materials Required (Cont)

Quantity	Description	Reference Number
1	Vent Inlet Port (Red)	MS17969-2
2 1/2 Inch Dia. Patch	Cloth, Coated, Neoprene (7.0-7.9 oz/yd^2) Color: SG/BLK	MIL-C-19002
As Required	Toluene	TT-T-548
As Required	Adhesive, Neoprene Color: Neutral	P/N 1041 NIIN 00-440-5603 (CAGE 31711)
	-or-	
As Required	Adhesive, Polychloroprene (Note 1)	MIL-A-5540
As Required (Note 2)	Fastener, Hook, Type II, 2-Inch Wide Nylon, Black	MIL-F-21840
As Required (Note 2)	Fastener, Pile, 2-Inch Wide Nylon, Black	MIL-F-21840
1	Revolving Head Cutting Punch	MIL-P-2001

Notes: 1. Adhesives may come from supply that contain both a base adhesive and an accelerator. Mixing of the accelerator with the base adhesive is not recommended for use on any items requiring adhesive in this manual. Use only the base adhesive.

2. Required only for installation in two-piece wet suits.

Table 5-38. Authorized Repairs/Fabrications/Installations

Description of Repair/Fabrication/Installation	Application	Paragraph
Repairing Holes, Tears, and Surface Cracking	All wet suits (when applicable)	5-449
Replacing Entrance, Leg, and Sleeve Slide Fasteners	All wet suits (if and when applicable)	5-450
Recementing Loose Pile Tape	All wet suits (when applicable)	5-451
Installation of Ventilation System	All commercial nonvented wet suits when authorized by the cognizant Type Commander	5-452
Recementing Ventilation Ducts and Seam Tapes	All wet suits (when applicable)	5-453

NOTE

Acquire a thorough understanding of all fabrication and installation instructions prior to initiating any actions. The dimensions given may be modified slightly to accommodate various style garments.

The following procedures are divided up into two steps. Step 1 is for full-length wet suits and step 2 is for the two-piece suits.

1. Full-Length Wet Suits.

a. Turn the wet suit garment inside out and place the back side of the wet suit facing upward.

b. Mark the location on the wet suit for the vent inlet port. See Figure 5-63.

NOTE

Cut panel 4 so it will completely cover the vent inlet port reinforcing patch and will also overlap panel 3 by 1/2 inch.

c. Cut the ventilation duct panel pieces 1, 2, 3, and 4. Place panels on the wet suit and mark their location. See Figure 5-64.

WARNING

Do not use toluene near open flames, heat, or electrical sparks. Avoid prolonged contact with skin or breathing of fumes. Use only in a well-ventilated area.

CAUTION

Toluene may damage equipment if not used with care. Avoid all contact with areas not to be cleaned. Wipe up excess or spills immediately.

NOTE

Do not touch cleaned areas when handling.

Store adhesive in air-tight containers.

NOTE

When separating two cemented surfaces, always brush seams with toluene. Prevent toluene from soaking into fabric areas not to be cemented. Remove residue cement with terry cloth, stiff bristle brush (not wire), or soft circular brush driven by an electric or compressed air drill. Remove only top two layers of adhesive as coverall fabric absorbs first coat of adhesive when recementing.

d. Clean material to be cemented with toluene. Allow to thoroughly dry.

e. Mix equal amounts of toluene and adhesive.

f. Apply two coats of neoprene adhesive to 2 1/2-inch diameter vent inlet port reinforcing patch and five coats of adhesive to wet suit where vent inlet port is to be located. Allow 10 to 30 minutes between each coat of adhesive.

g. When last coat of adhesive becomes tacky, place reinforcing patch on wet suit.

h. Punch a 1 1/8-inch diameter hole through center of reinforcing patch and wet suit material.

i. Install vent inlet port.

j. Prepare wet suit for the installation of ventilation duct panels by cleaning material to be cemented with toluene. Allow to thoroughly dry.

k. Mix equal amounts of toluene and adhesive.

NOTE

The Trilok spacer material used for the horizontal ventilation duct (Panel 2) should be cut on the bias.

l. Cement 1-inch wide strips of Trilok spacer materials to the wet suit using two coats of neoprene adhesive; allow 10 to 30 minutes between each coat. Cement spacer material to wet suit only every 4 inches (approx.) for a distance of 1/2 inch. See Figure 5-64.

m. Cement Panel 2 and Panel 4 to wet suit first.

n. Cement Panel 1 and Panel 3 to wet suit. Begin cementing these panels to wet suit where they overlap Panel 2.

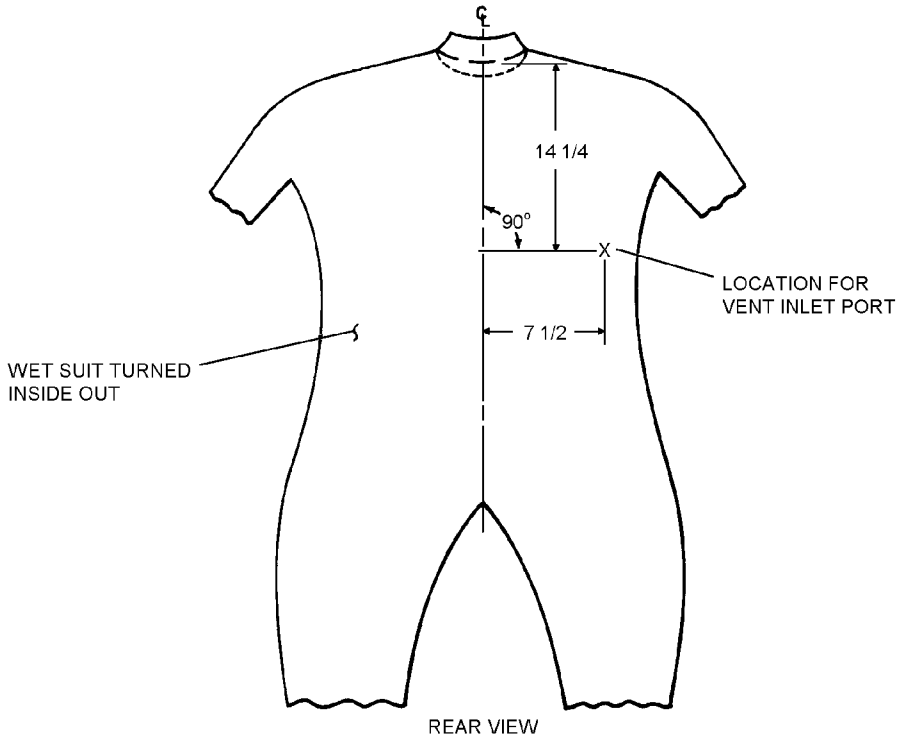

Figure 5-63. Vent Inlet Port Position (Suit)

5-20

o. Using revolving head cutting punch, punch two 1/16-inch diameter holes every 3 inches along total length of ventilation duct system.

NOTE

Allow 24 hours for adhesive to completely cure before suit is donned.

2. Two-Piece Wet Suits.

NOTE

The ventilation system is installed in the pants portion only on two-piece suits.

a. Turn wet suit pants inside out, and place back side of wet suit facing upward.

b. Mark location on wet suit pants for vent inlet port. See Figure 5-65.

c. Cut ventilation duct panel pieces 1, 2, 3, and 4. Place panels on pants portion of wet suit, and mark their location. Panel 1 and 3 should be shortened so that they end approximately 1/2-inch from top edge of pants. See Figure 5-66.

WARNING

Do not use toluene near open flames, heat or electrical sparks. Avoid prolonged contact with skin or breathing of fumes. Use only in a well-ventilated area.

CAUTION

Toluene may damage equipment if not used with care. Avoid all contact with areas not to be cleaned. Wipe up excess or spills immediately.

NOTE

Do not touch cleaned areas when handling.

Store adhesive in air-tight containers.

When separating two cemented surfaces, always brush seams with toluene. Prevent toluene from soaking into fabric areas not to be cemented. Remove residue cement with terry cloth, stiff bristle brush (not wire), or soft circular brush driven by an electric or compressed air drill. Remove only top two layers of adhesive as coverall fabric absorbs first coat of adhesive when recementing.

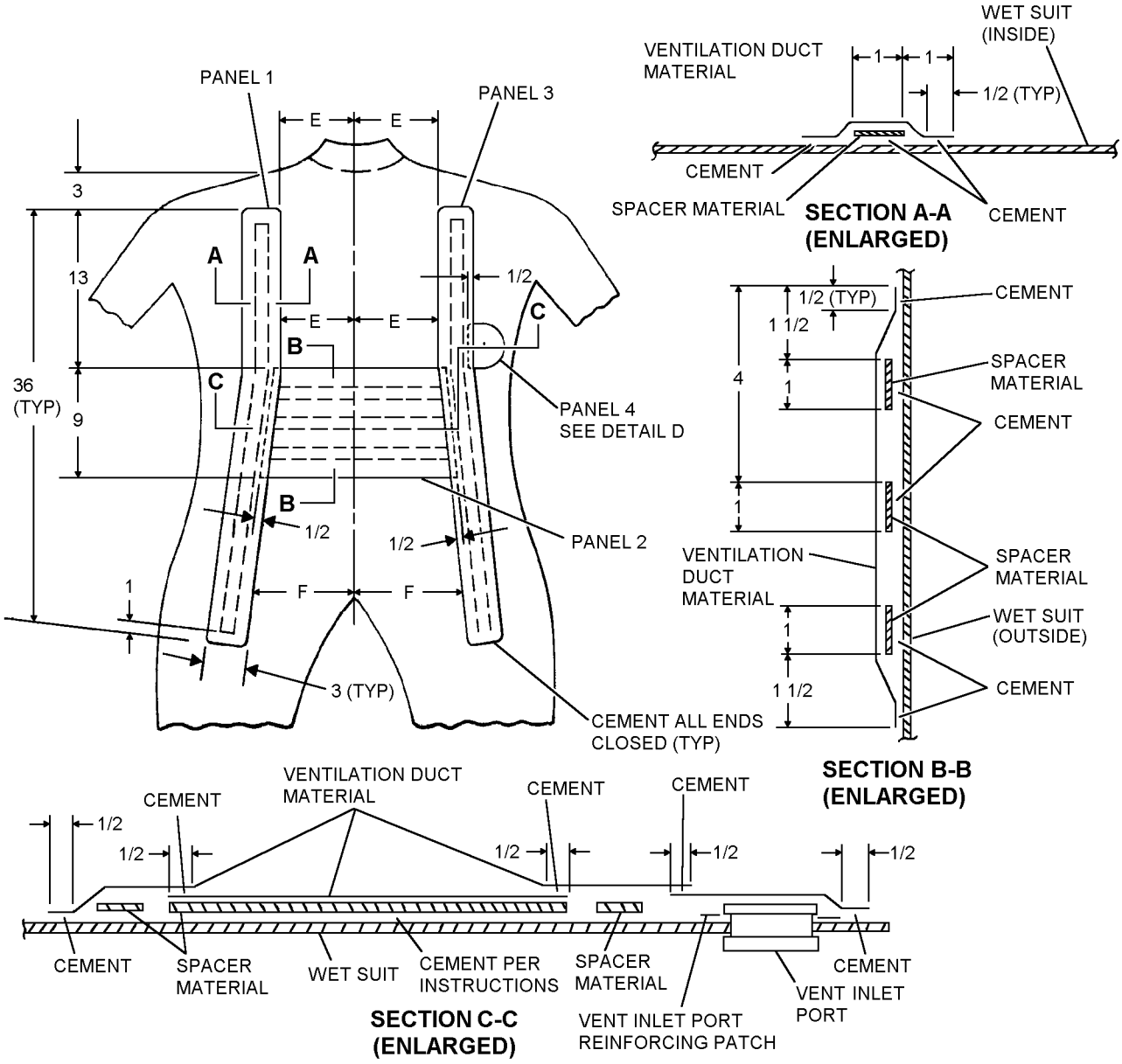

INDIVIDUAL WAIST CIRCUMFERENCE - INCHES	E	F
29-32	2 3/4	4 1/2
32-35	3 1/4	5 3/4
35-38	3 3/4	7

5-21

Figure 5-64. Ventilation Duct Panel Position (Suit)

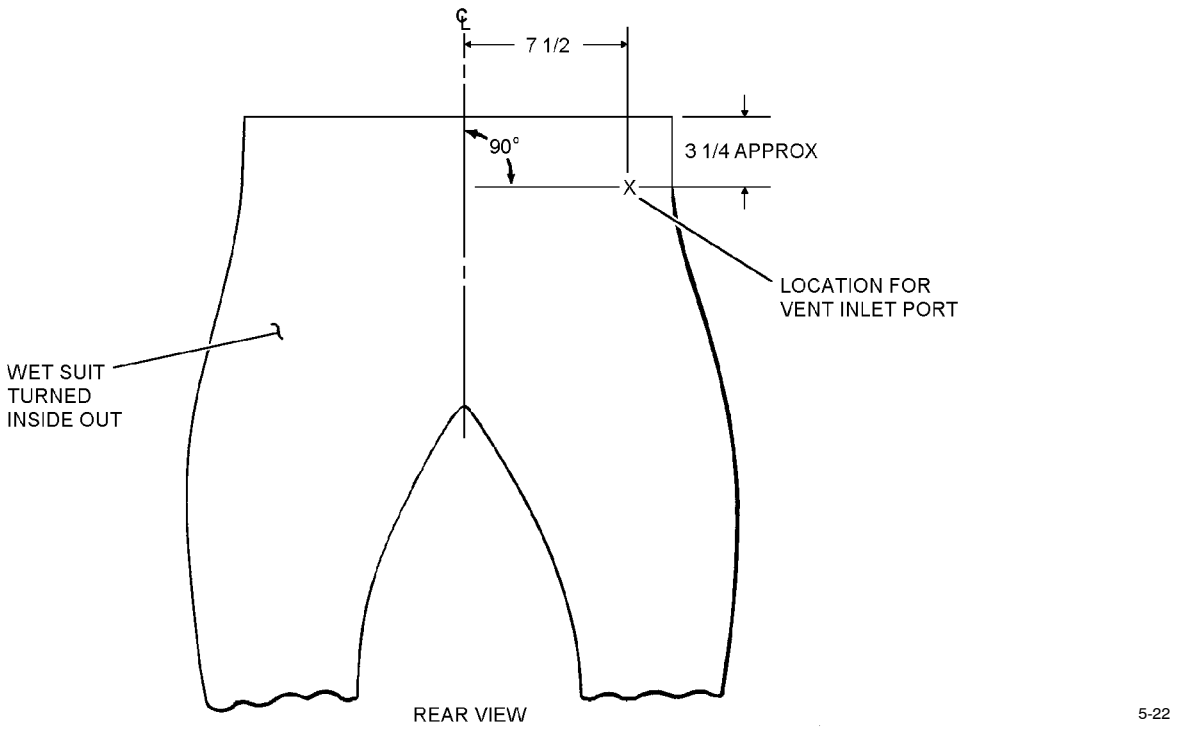

Figure 5-65. Vent Inlet Port Position (Pants)

d. Clean material to be cemented with toluene. Allow to thoroughly dry.

e. Mix equal amounts of toluene and adhesive.

f. Apply two coats of neoprene adhesive to 2 1/2-inch diameter vent inlet port reinforcing patch and five coats of adhesive to wet suit where vent inlet port is to be located. Allow 10 to 30 minutes between each coat of adhesive.

g. When last coat of adhesive becomes tacky, place the reinforcing patch on wet suit.

h. Punch a 1 1/8-inch diameter hole through center of reinforcing patch and wet suit material.

i. Install vent inlet port.

j. After turning wet suit pants right-side out, don pants and jacket.

k. Mark the location of vent inlet port on jacket. Punch 1/8-inch diameter hole through jacket so that hole will line up with vent inlet port installed on pants. A ring of hook and pile fastener tape approximately 1-inch wide may be sewn around vent port and opening on jacket to secure jacket and pants together in this area.

l. Remove jacket and pants and turn pants inside out. Prepare wet suit pants for installation of ventilation duct panels by cleaning material to be cemented with toluene. Allow to thoroughly dry.

m. Mix equal amounts of toluene and adhesive.

NOTE

The Trilok spacer material used for the horizontal ventilation duct (Panel 2) should be cut on the bias.

n. Cement 1 inch wide strips of Trilok spacer material to wet suit using two coats of neoprene adhesive; allow 10 to 30 minutes between each coat. Cement spacer material to wet suit only every 4 inches (approx.) for distance of 1/2 inch. See Figure 5-66.

o. Cement Panel 2 and Panel 4 to wet suit first.

p. Cement Panel 1 and Panel 3 to wet suit. Begin cementing these panels to wet suit where they overlap Panel 2.

q. Using a revolving head cutting punch, punch two 1/16-inch diameter holes every 3 inches along total length of the ventilation duct system. Ensure that holes are punched at top of Panels 1 and 3 so that ventilation air will flow into jacket.

5-453. Recementing Ventilation Ducts and Seam Tapes. Use standard cementing procedures. Ensure ends of seam tapes overlap a minimum of 1/2 inch.

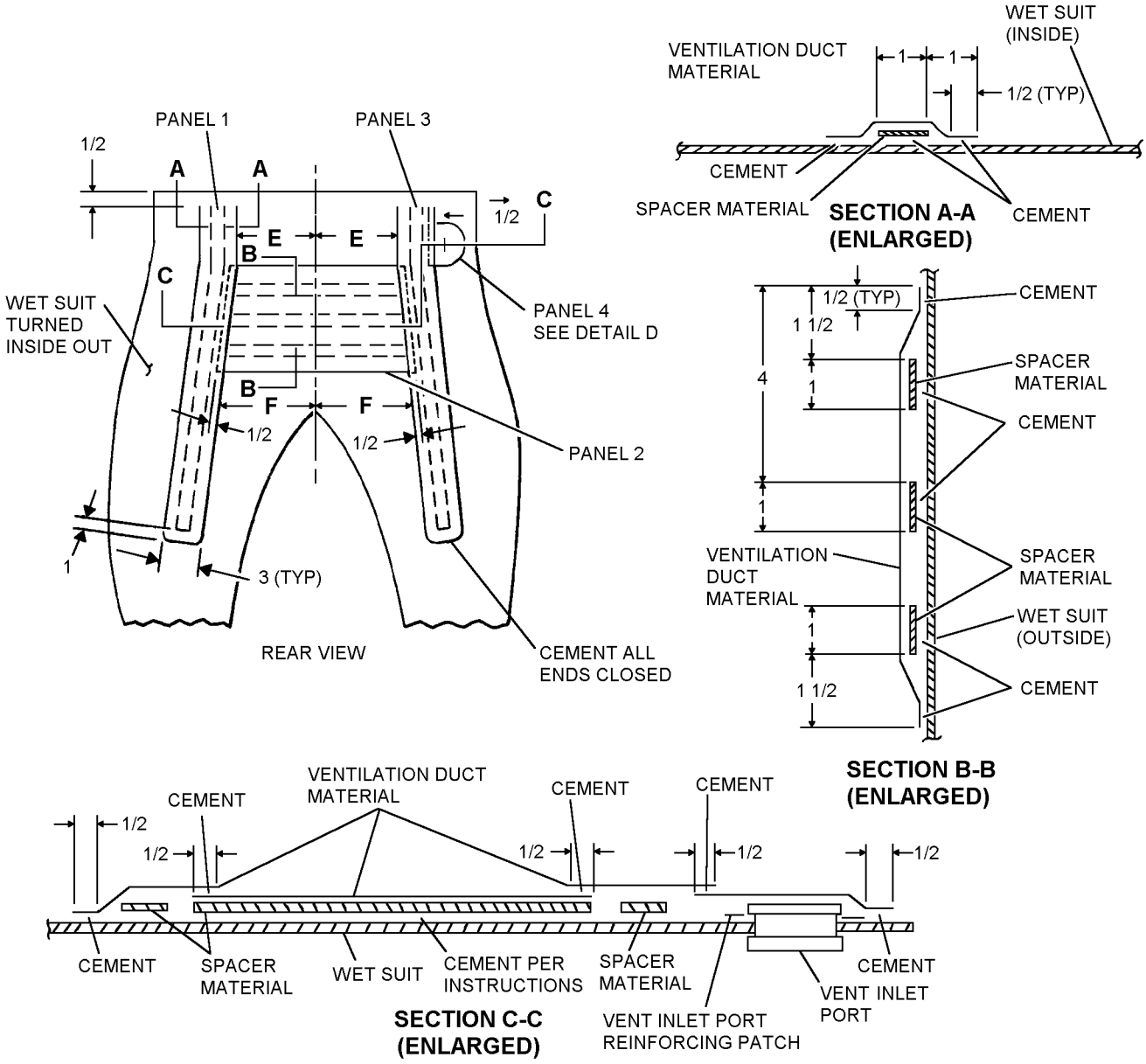

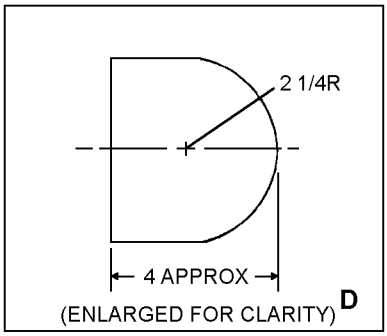

INDIVIDUAL WAIST CIRCUMFERENCE - INCHES	E	F
29-32	2 3/4	4 1/2
32-35	3 1/4	5 3/4
35-38	3 3/4	7

5-23

Figure 5-66. Ventilation Duct Panel Position (Pants)

Section 5-10. Leak Test Fixtures

5-454. GENERAL.

5-4555-243. Leak test fixtures and seal clamps, not stocked in the supply system, must be assembled locally. Items not available through normal supply channels shall be purchased locally, or fabricated at the organizational maintenance level or above.

5-456. CONFIGURATION.

5-457. TEST FIXTURES. Test fixtures are comprised of various connectors, couplings, seal clamps and adapters with attendant shutoff valves necessary to introduce and regulate a source of pressure into a bladder or cell. A measuring device must be provided to measure initial pressure and leakage (pressure drop).

5-458. WRIST SEAL CLAMP. To fabricate wrist seal clamps for testing. See Figure 5-67.

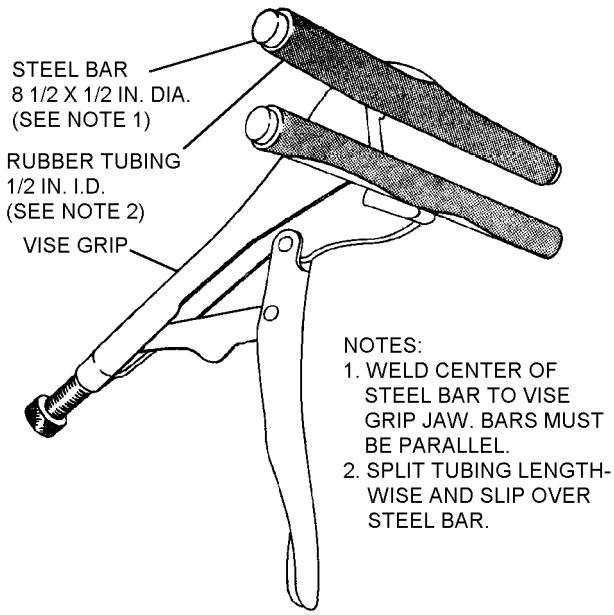

Figure 5-67. Wrist Seal Clamp

NOTE

1/8-inch thick steel strips, (two for each clamp) may be substituted. Clamp with C-clamps or vise grips.

5-459. LEAK TEST FIXTURE. The leak test fixture shown in Figure 5-68 is a basic fixture that can be adapted to most items of equipment and test requirements by substituting the connector (adapter). Refer to Figure 5-68. Basic operating instructions are as follows (refer to applicable section for specific instructions):

1. Attach the device to a source of low pressure air.

2. Select the proper adapter, and install on outlet hose. Ensure adapter is clamped on hose, and is leak tight.

CAUTION

Inflate test item slowly, making frequent stops to check pressure.

3. Attach adapter to test item. Rotate 3-way valve to air source and inflate test item. Rotate valve to manometer and read pressure. Repeat as necessary until proper pressure is attained.

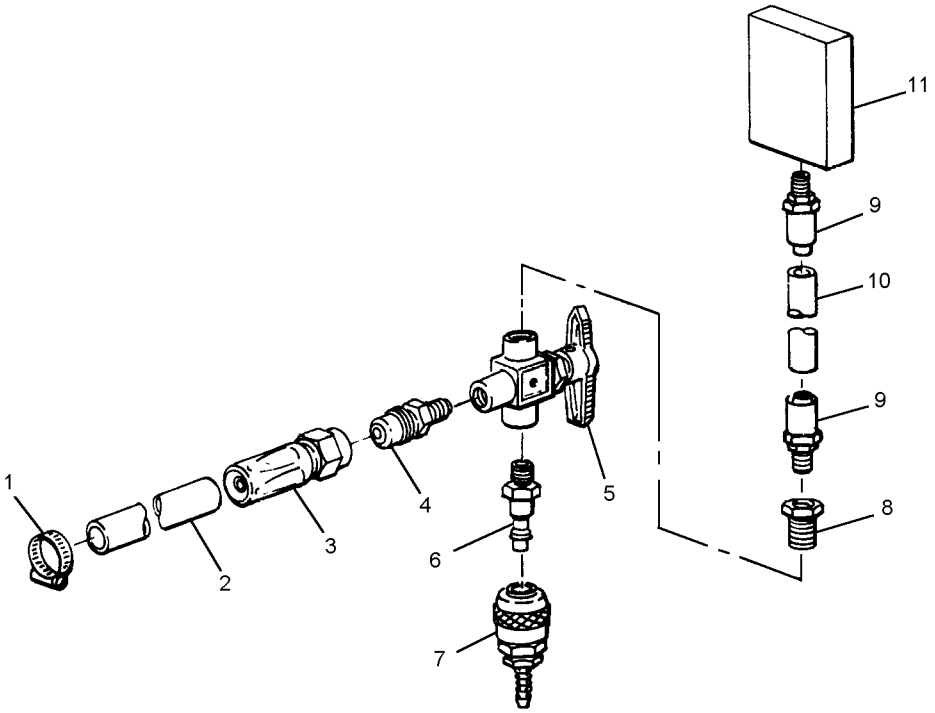

5-36

Figure 5-68. Anti-Exposure Leak Test Fixture

Figure and Index Number	Part Number	Description 1 2 3 4 5 6 7	Units Per Assembly	Usable On Code
5-36	No Number	TEST FIXTURE, Anti-Exposure Hood	1	
-1	5415L	. CLAMP, Hose, size 16 (39428)	1	
-2	No Number	. HOSE, Rubber, 1/2 in. ID, 3/4-in. OD	A/R	
-3	MS27404-8D	. FITTING, Hose	1	
-4	AN816-4-8D	. REDUCER, 3/4 in. Tubing to 1/2 in. pipe	1	
-5	B-43XVF4	. VALVE, 3-way with vent (12623)	1	
-6	MIL-C-4109	. COUPLING, Air hose (male) (Note 1)	1	
-7	MIL-C-4109	. COUPLING, Air hose (female) (Note 1)	1	
-8	No Number	. REDUCER, 1/2 to 1/8	1	
-9	851062	. ADAPTER, Hose (08395)	2	
-10	486062	. HOSE, Rubber, 1/2 in. OD (08395)	A/R	
-11	10AA25WM	. MANOMETER, U-Tube, 15 in. range (39739)	1	
	Note: 1. Select quick-disconnect coupling compatible with local low pressure air installation.			

THIS PAGE INTENTIONALLY LEFT BLANK.

CHAPTER 6

Survival Vests

Section 6-1. SV-2B Survival Vest

6-1. GENERAL.

6-2. The SV-2B Survival Vest provides maximum useful storage for survival equipment, consistent with minimum bulk and weight. See Figure 6-1, Figure 6-2, and Figure 6-3. In addition, the survival vest provides for in-tegration of a life preserver and the chest-mounted oxygen regulator. It does not interfere with use of either the regular or integrated-type parachute harness.

6-3. CONFIGURATION.

6-4. The SV-2B Survival Vest, MIL-V-81523 (NIIN 00-139-6174) is constructed basically of nylon cloth. An adjustable harness, leg straps, and an entrance slide fastener provide a means of fitting and securing the vest to the aircrewmember. Elastic straps at the rear allow greater comfort and mobility for the wearer. Pockets are provided for stowage of survival items. See Figure 6-4. When required, the chest-mounted oxygen regulator is located inside a pocket secured to the vest by means of hook and pile tape (except for S-3 and AV-8 series aircraft).

6-5. For S-3 and AV-8 series aircraft, the oxygen regulator is mounted on a mounting bracket attached to the vest in accordance with ACC-308 (for S-3 series aircraft) or ACC-375 (for AV-8 series aircraft). See Figure 6-2 and Figure 6-3.

6-6. SV-2B Survival Vests modified by ACC 522 to permit expansion of circumference of vest for wear over bulky clothing are reidentified as CMU-21/P22P-7(V), P/N 67A100H41-1.

6-7. SV-2B Survival Vests with side pockets with heavy medium slide fastener chains opening from rear are to be modified in accordance with ACC 599 Revision A to add an additional slide to each side pocket. Double slide configuration provides increased access to stowed survival items and improved safety. No change in nomenclature. Part number changes to 67A100D2-401 after ACC 599 Rev A.

6-8. SV-2B Survival Vests intended for use by USMC CH-46D/E, CH-53D/E, MH-53E, and UH-1N helicopter aircrews who are equipped with the A/P23P-14A(V) Respirator Assembly shall be modified when placed in service to accommodate the A/P22P-9A(V) Chemical, Biological, and Radiological (CBR) Protective Assembly in accordance with ACC 616. SV-2B Survival Vests intended for use by all other USN/USMC rotary wing aircrews who are equipped with the A/P22P-14(V)1 CBR Respirator Assembly shall be modified in accordance with ACC 616. Survival vests modified by this directive and redesignated CMU-23A/P become dual purpose vests. For routine missions where there is no potential of CBR exposure, the CMU-23A/P vest is configured like a normal SV-2B Survival Vest. With interchangeable pocket configuration, however, the CMU-23A/P vest can be quickly reconfigured for missions requiring CBR protection.

6-9. SV-2B Survival Vest, P/N 67AS100D2-51, used by aircrews of USN/USMC helicopter, E-2C, and C-2A aircraft shall be modified in accordance with ACC 638 to accommodate the SRU-40/P Helicopter Aircrew Breathing Device (HABD). After modification the part number of the modified SV-2B Survival Vest shall be 67AS100D2-601.

6-10. DRAWINGS INDEX. Table 6-1 indicates the drawing index and nomenclature for the SV-2B.

6-11. APPLICATION.

6-12. The SV-2B is designed for use by all aircrewmembers.

NOTE

ACC-522, 522 AM1 and 522 AM2 authorizes the installation of an extension panel into the SV-2B for aircrew members of P-3 all series and rotary wing aircraft to accommodate both bulky clothing and body armor. Once modified, the SV-2B is reidentified as the CMU-21/P22P-7(V) P/N 67A100H41-1 (See Section 6-2). See NAVAIR 13-1-6.7-1 for authorized aircraft and the authorized configuration of vest and body armor.

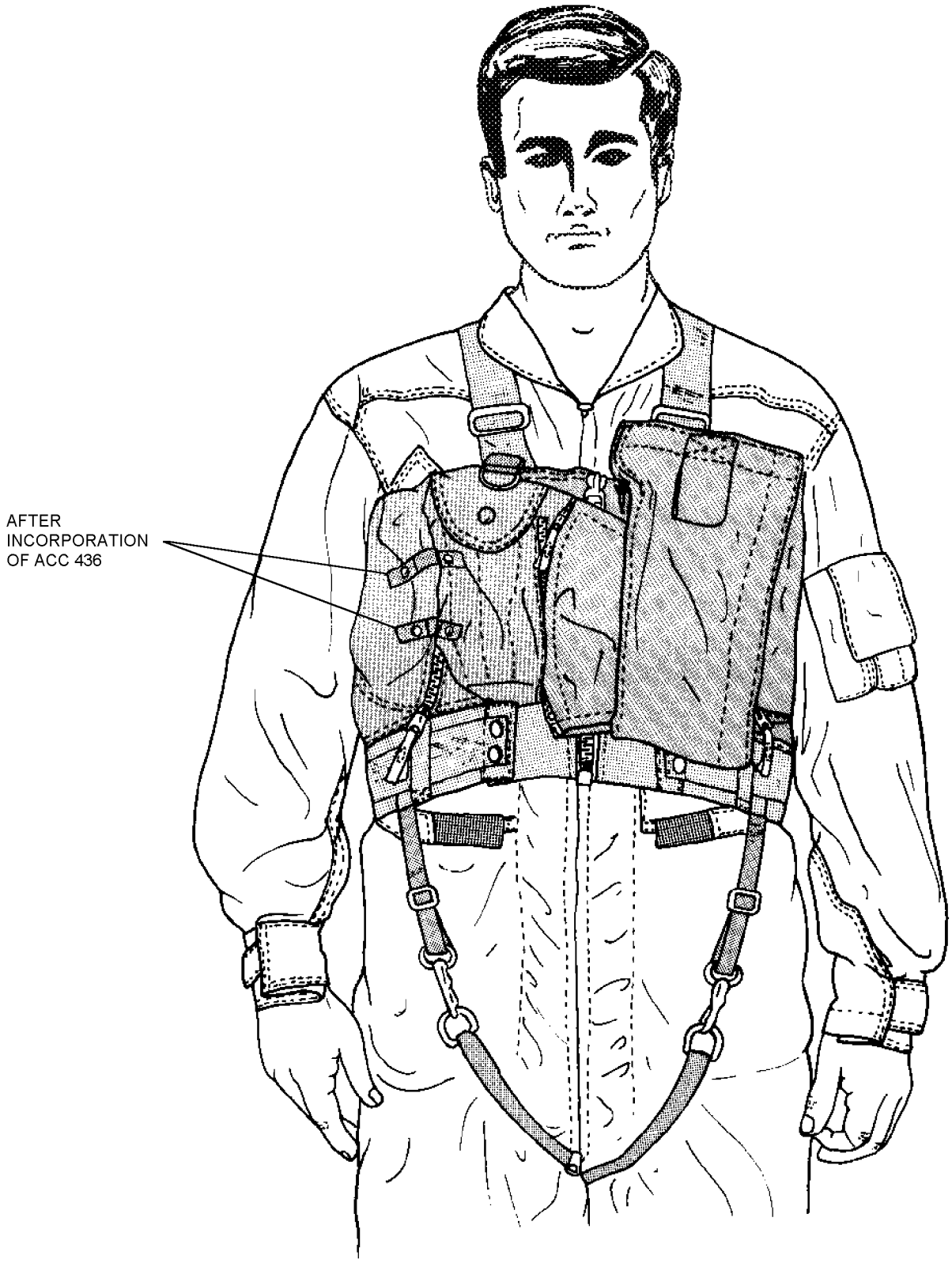

6-1

Figure 6-1. SV-2B Survival Vest

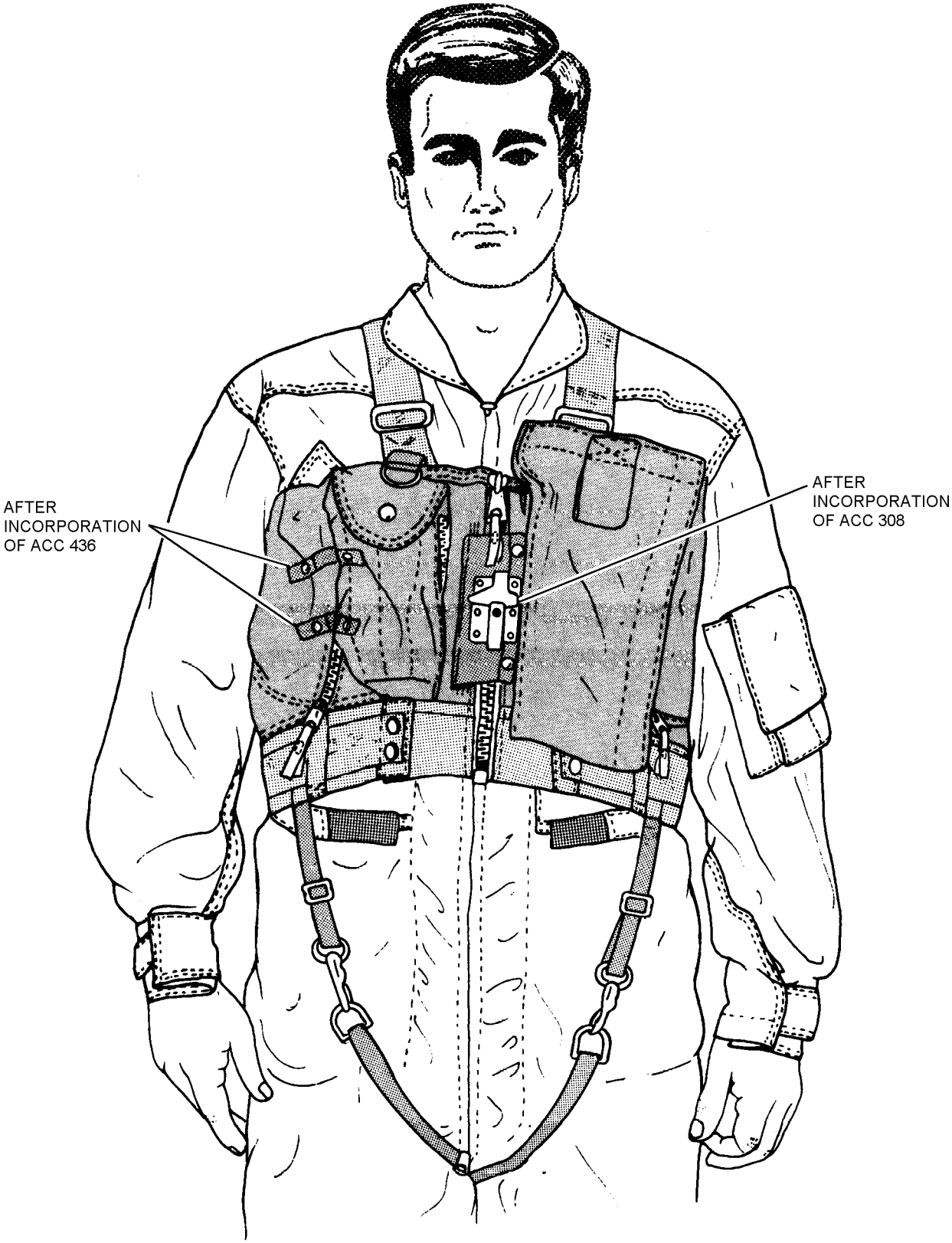

6-2

Figure 6-2. SV-2B Survival Vest (S-3 Series Use Only)

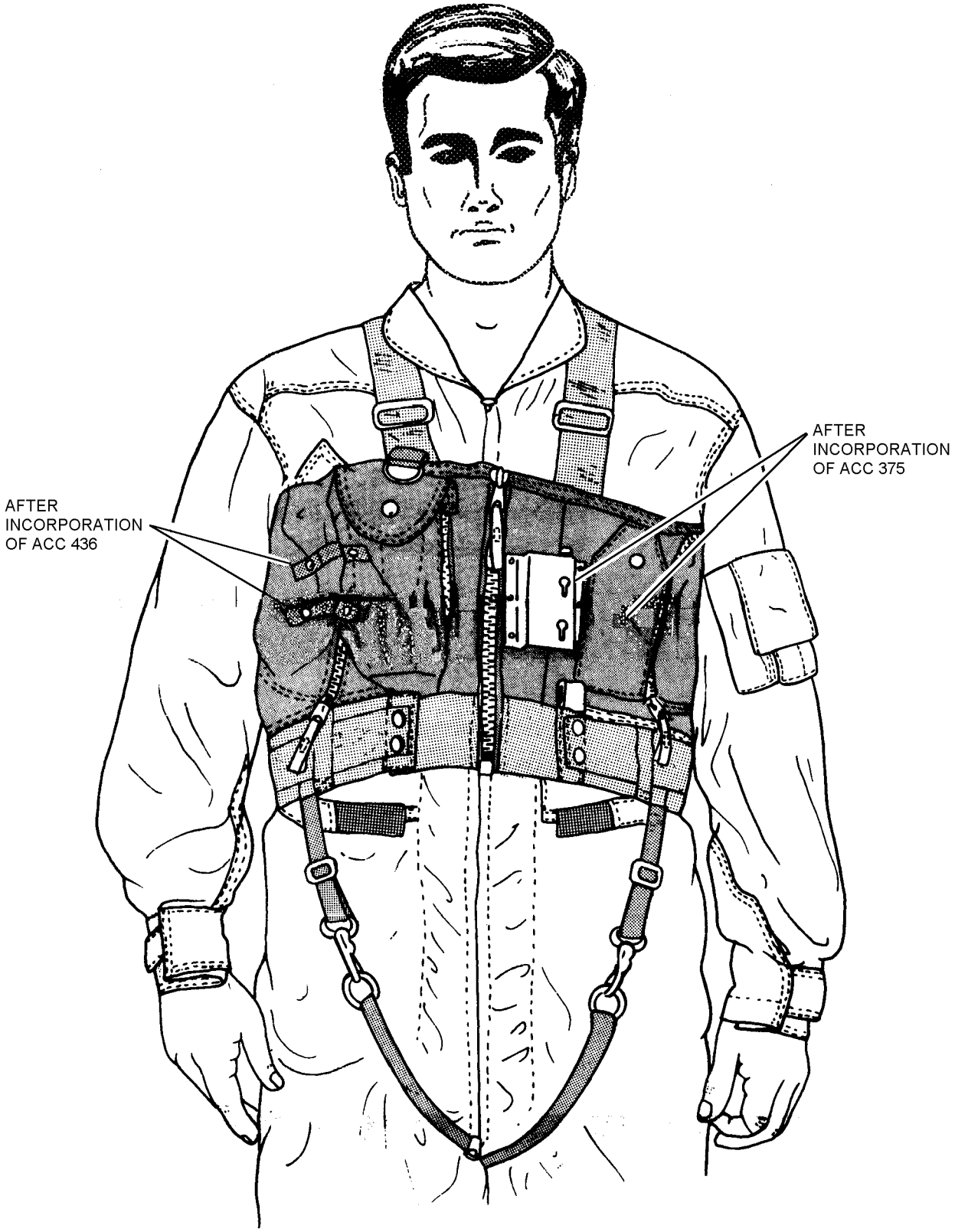

6-3

Figure 6-3. SV-2B Survival Vest (AV-8 Series Use Only)

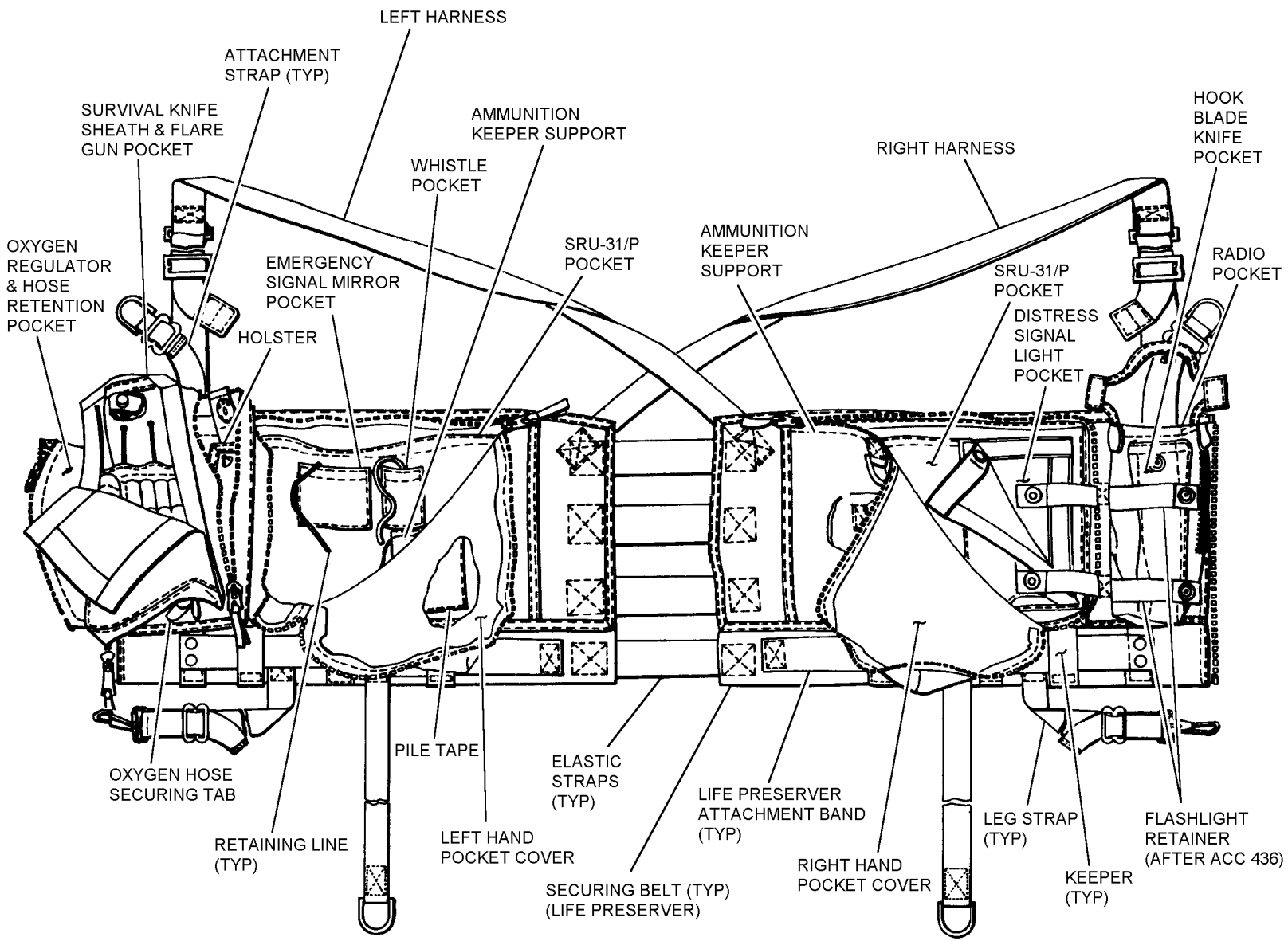

Figure 6-4. SV-2B Parts Nomenclature

Table 6-1. SV-2B Drawings Index

Drawing Number	Description 1 2 3 4
67A100D2-1 (CAGE 30003)	Vest Assembly, Survival Equipment
67A100D3-1	. Pocket Assembly, Knife Sheath, Flare Gun, and Holster
67A100D4-1	. . Holster Assembly
67A100D5-1	. Pocket Assembly, Whistle, Mirror, SRU Kits, and Magazine Keeper
67A100D6-1	. Pocket Assembly, Marker Light, SRU Kits, and Magazine Keeper
67A100D7-1	. Cover Assembly, Left Hand Vest Panel
67A100D7-2	. Cover Assembly, Right Hand Vest Panel
67A100D8-1	. Harness Assembly, Right Side
67A100D8-2	. Harness Assembly, Left Side
67A100D9-1	. Securing Belt Assembly
67A100D10-1	. Pocket Assembly, Radio, Hook Blade Knife, and Ammunition Keeper
67A100C12-1	. Securing Strap Assembly, Oxygen Hose
67A100C13-1	. Keeper Assembly, Ammunition

6-13. FITTING.

6-14. The basic SV-2B is designed to fit chest sizes from 40 to 48 inches. By changing the elastic straps at the rear, the vest may be adapted to a wider size range. To fit an SV-2B, proceed as follows:

1. The aircrewmember should don all normal flight gear, including PCU-Series torso harness (if used).

NOTE

Accomplish adjustments in both standing and sitting positions.

2. Don an SV-2B. Pass leg straps through crotch and attach at snaphooks. Adjust leg straps and shoulder straps so that they are snug and vest bottom is just above hips.

NOTE

On some aircrewmembers, it may be necessary to lengthen or shorten elastic straps towards either top or bottom. A properly fitted SV-2B should conform to the torso without gaps, yet not restrict breathing or movement.

3. Examine SV-2B for proper fit. If too loose, elastic straps must be shortened. If too tight, straps must be lengthened. To adjust length of straps, proceed as follows:

a. Cut 1 1/2-inch wide cotton elastic webbing (NIIN 00-262-1655) to desired length for new straps.

b. Remove installed straps, using care not to damage vest cloth. If straps are to be removed completely, proceed to step d.

NOTE

All stitching is to be performed with a ASTM-D-6193, Type 301 lockstitch, 8 to 10 stitches per inch. Backstitch 1/2-inch at ends of all stitching.

c. Stitch new straps cut in step a to vest. Use size E nylon thread (V-T-295). Proceed to step g.

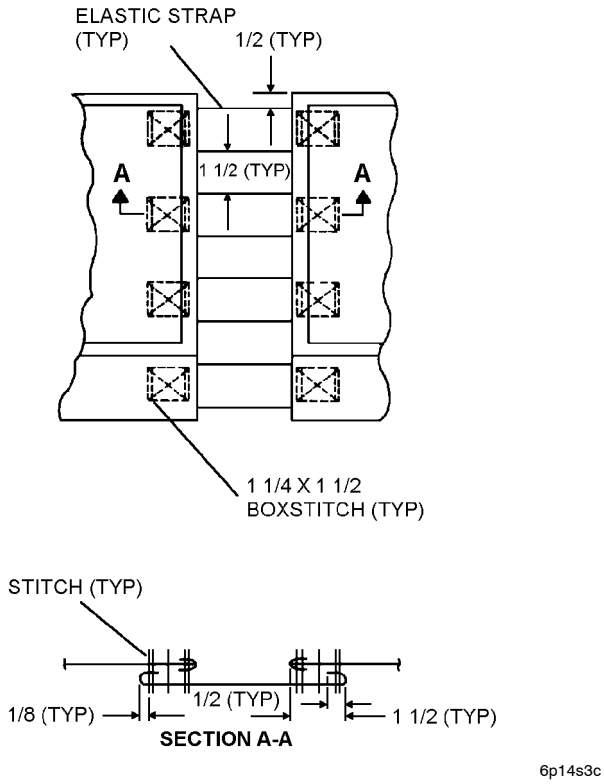

Step 3c - Para 6-14

d. If eliminating straps completely, have aircrewmember don the vest over winter flight gear to ensure fit when worn over layers of clothing. Determine amount of excess width at center back that must be removed.

e. Taking an equal amount from each side, mark location for new seamline. Remove back harness straps using care not to damage vest cloth.

f. Stitch new center back seam at markings with seam type LSq-3. Reposition harness straps and stitch to vest with 1 1/4 X 1 1/2-inch crossbox stitch. Use size E nylon thread (V-T-295).

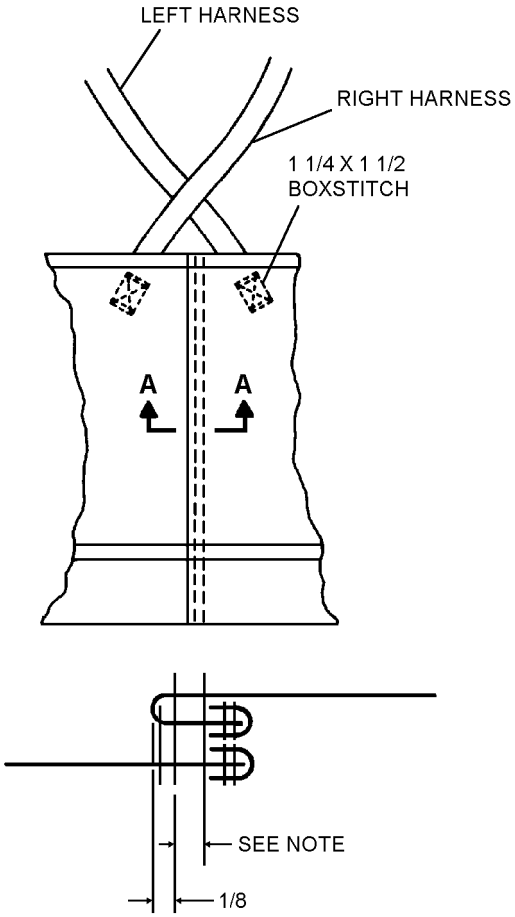

SECTION A-A

NOTE: THIS DISTANCE WILL VARY ACCORDING TO THE AMOUNT REMOVED ALONG THE CENTER BACK.

6p14s3f

Step 3f - Para 6-14

g. Repeat step 2.

4. If desired, shoulder straps may be tacked in place close to the buckle using two turns of size E nylon thread doubled. Tie with a surgeons knot and secure with a square knot 1/4 inch from the edge of the strap.

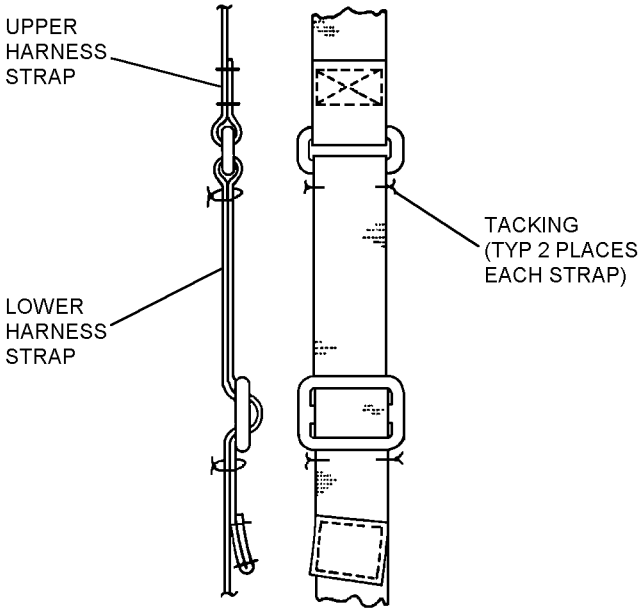

6p14s4

OR

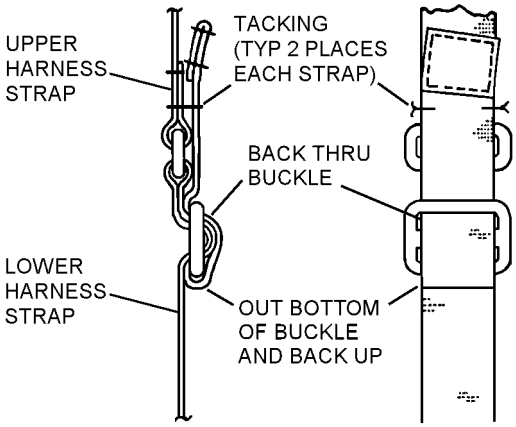

6p14s4a

Step 4 - Para 6-14

6-15. DONNING.

6-16. INSTALLING THE LPU LIFE PRESERVER TO THE SV-2B AND CMU-21 SURVIVAL VEST.

Materials Required

Quantity	Description	Reference Number
As Required	Insulation Sleeving, Electrical	MIL-I-23053/5 NIIN 00-815-1300

1. Reeve waist belt of SV-2B through waist loops of LPU life preserver and waist loops of SV-2B.

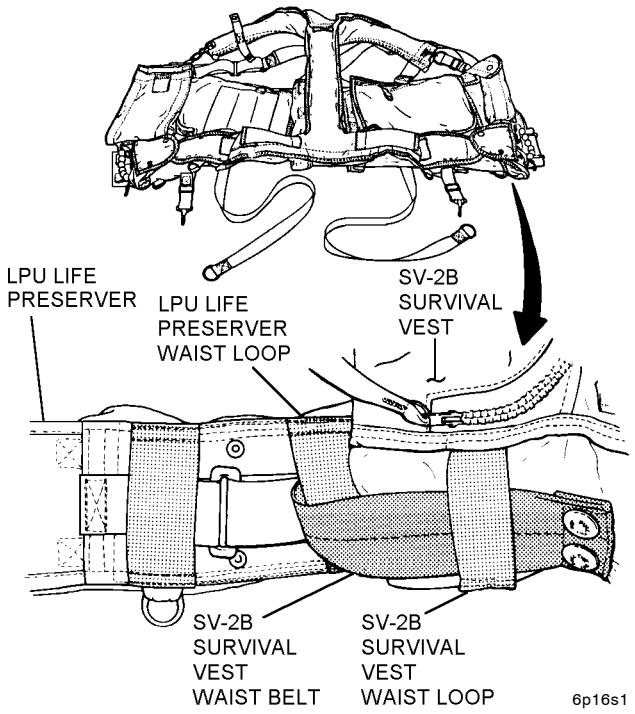

Step 1 - Para 6-16

2. Snap the survival vest waist belt snap fasteners to secure the life preserver to the survival vest.

3. Cut two pieces of the electrical insulation sleeving, (heat shrink) Part No. MIL-I-23053/5, 2.75 inches in length.

4. Slide one piece of the heat shrink cut in step 3 over one of the D-rings of the survival vest attachment strap and connect the life preserver snap hook to the D-ring.

5. Slide the heat shrink up and over the life preserver snap hook, ensure the heat shrink butts against the shank (base) of the snap hook.

CAUTION

Ensure heat from the heat gun is not directed to the bladder of the life preserver. Testing has indicated direct heat from the heat gun will not harm the bladder, but it shall be avoided.

6. Apply heat from the heat gun until the heat shrink is snug around the snap hook. The heat shrink should cover the spring clip opening of the snap hook completely.

7. Repeat steps 4 through 6 for the snap hook on the opposite side.

8. Inspect both snap hooks modified in steps 4 through 7 to ensure the heat shrink is snug around the snap hooks and covers the snap hook spring clip opening completely.

9. Snap retaining straps of life preserver collar lobes around SV-2B shoulder straps.

10. Don survival vest and life preserver as one assembly. (See Figure 6-5).

6-17. DONNING THE SV-2B, LPU LIFE PRESERVER AND PCU-SERIES TORSO HARNESS. To don the SV-2B, LPU life preserver and PCU-Series torso harness, proceed as follows:

1. Reeve waist belt of SV-2B through waist loops of LPU life preserver and waist loops of SV-2B.

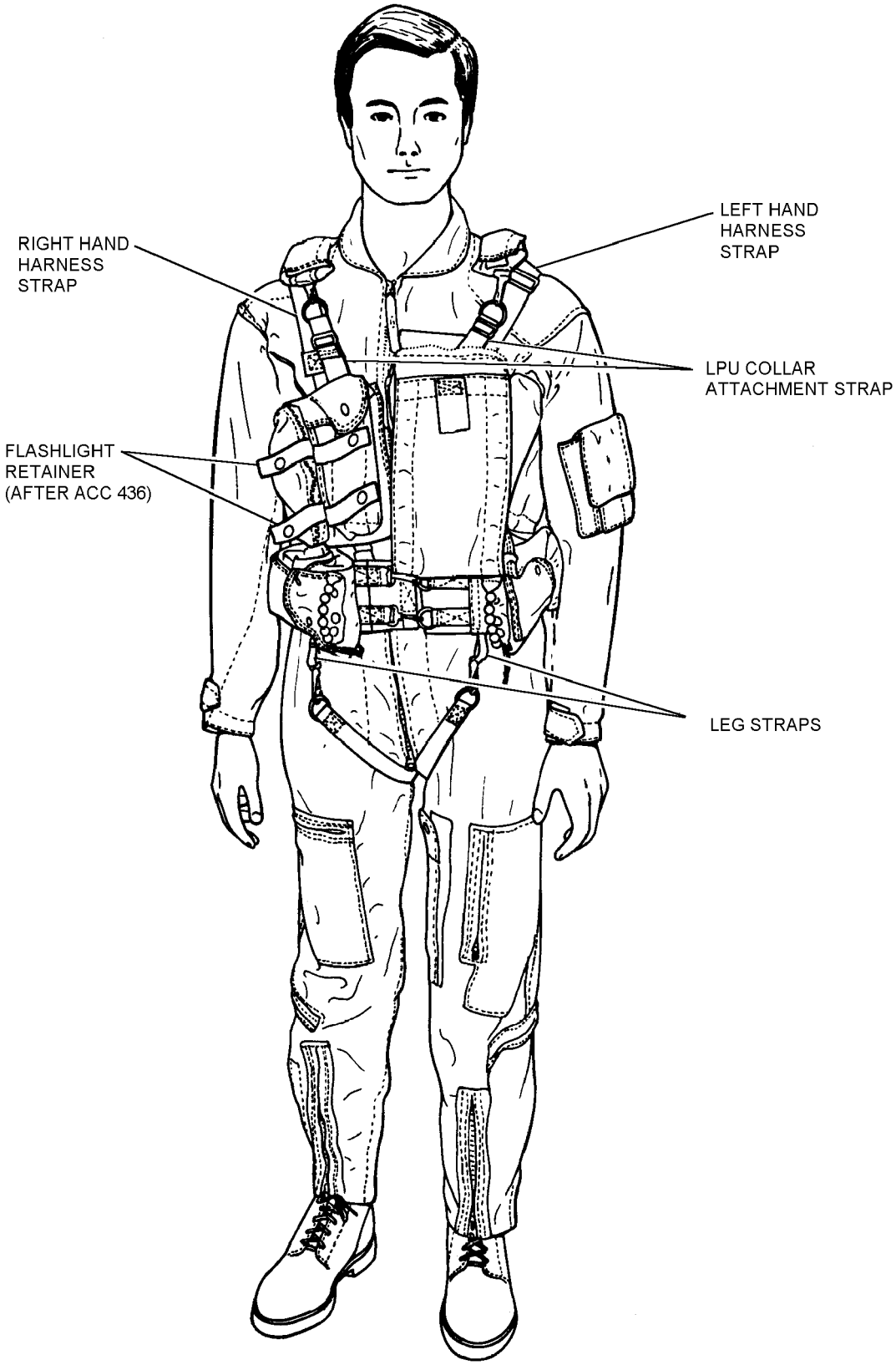

Figure 6-5. Donned SV-2B and LPU Life Preserver

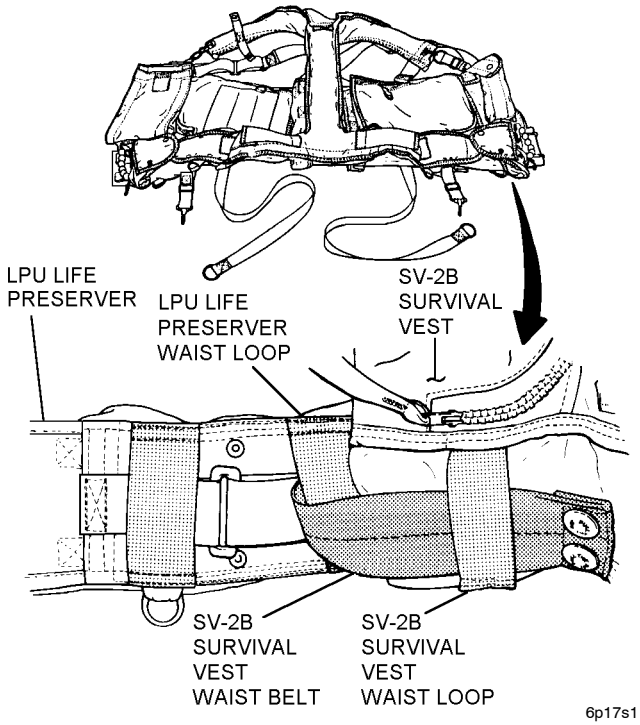

Step 1 - Para 6-17

2. Snap fasteners of waist belt onto SV-2B.

3. Attach snaphooks on LPU life preserver collar lobes to D-rings on SV-2B.

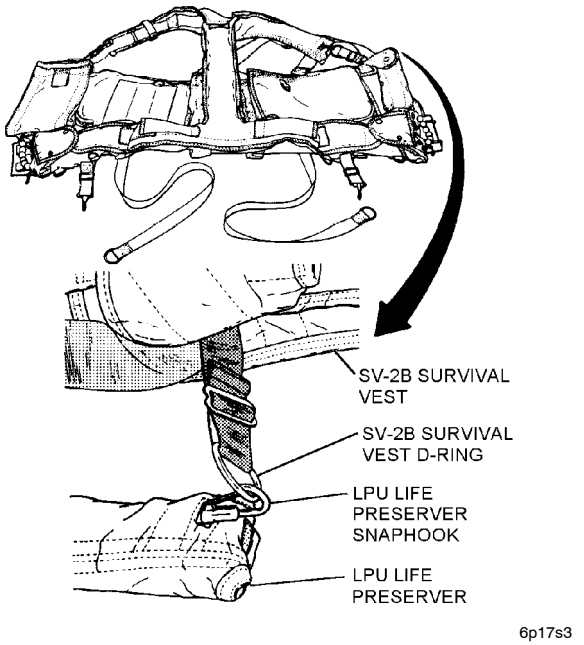

Step 3 - Para 6-17

4. Don PCU-Series torso harness.

5. Secure torso harness with slide fastener.

6. Reeve and tighten chest strap.

7. Don SV-2B and LPU life preserver as one assembly over torso harness.

8. Secure SV-2B/LPU assembly with slide fastener.

NOTE

The SV-2B leg strap portions with D-ring may be removed for individuals who are always configured with a torso harness.

9. Attach snaphook of leg strap on SV-2B to D-ring on groin strap of torso harness.

10. Check adjustment on all straps. See Figure 6-6.

6-18. DONNING THE PCU-SERIES TORSO HARNESS (MODIFIED IAW ACC 380) AND LPU LIFE PRESERVER. To don the modified torso harness and LPU life preserver, proceed as follows:

1. Reeve waist belt on torso harness through waist loops of LPU life preserver and waist loops of torso harness.

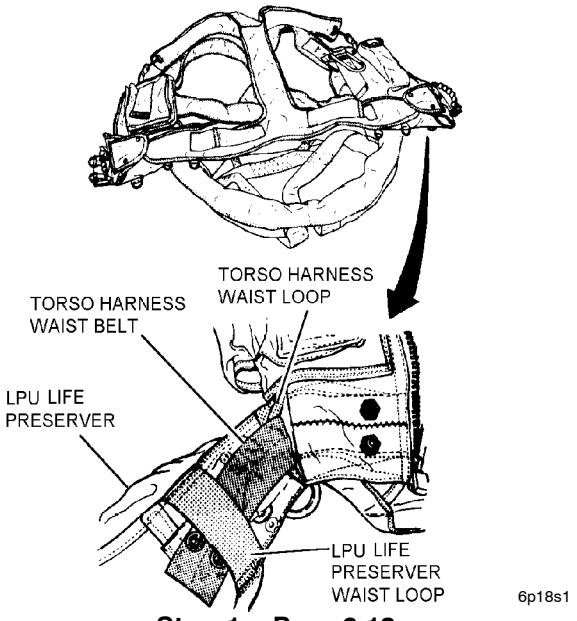

Step 1 - Para 6-18

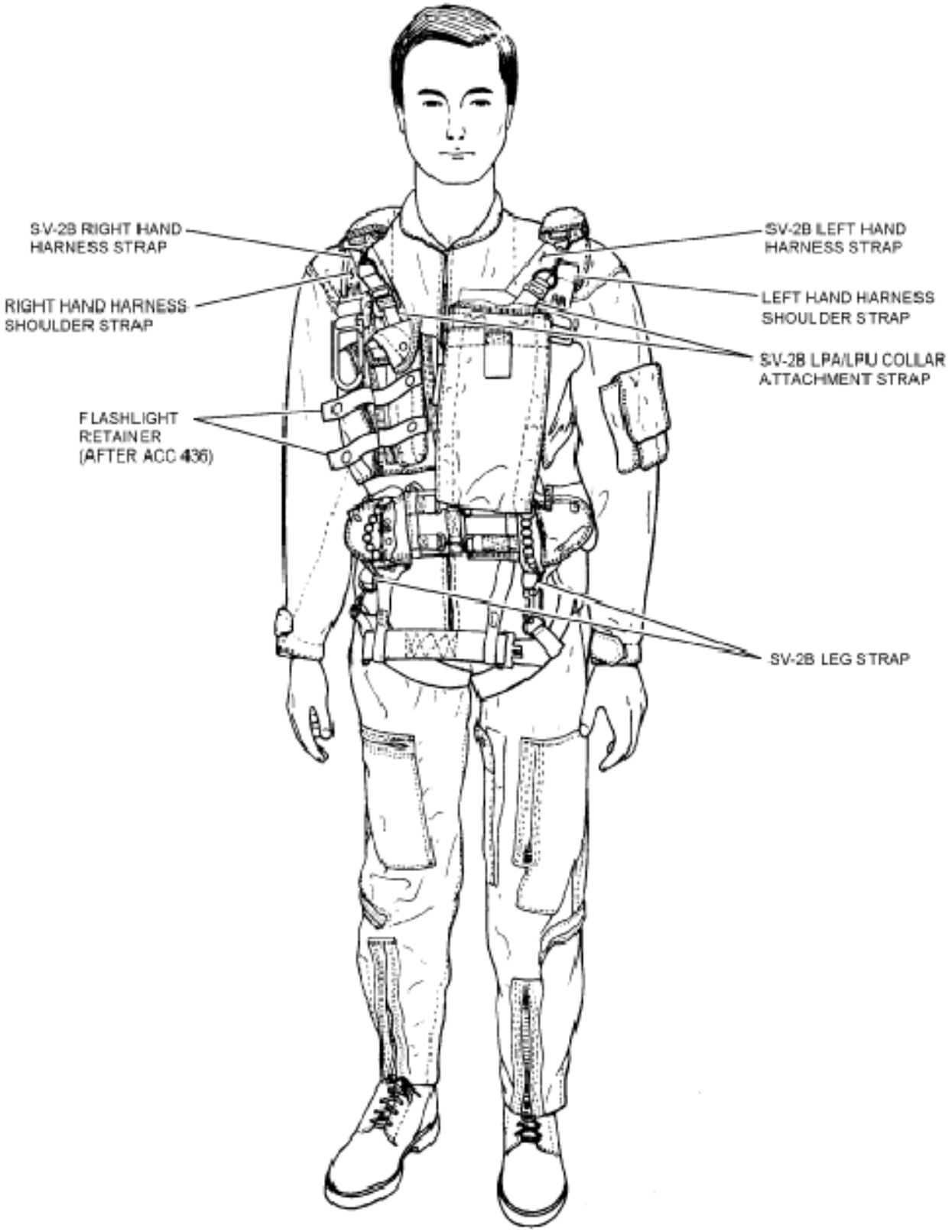

Figure 6-6. Donned SV-2B, LPU Life Preserver, and PCU-Series Torso Harness

2. Snap fasteners of waist belt to torso harness.

3. Attach snaphooks on LPU life preserver collar lobes to D-rings on torso harness.

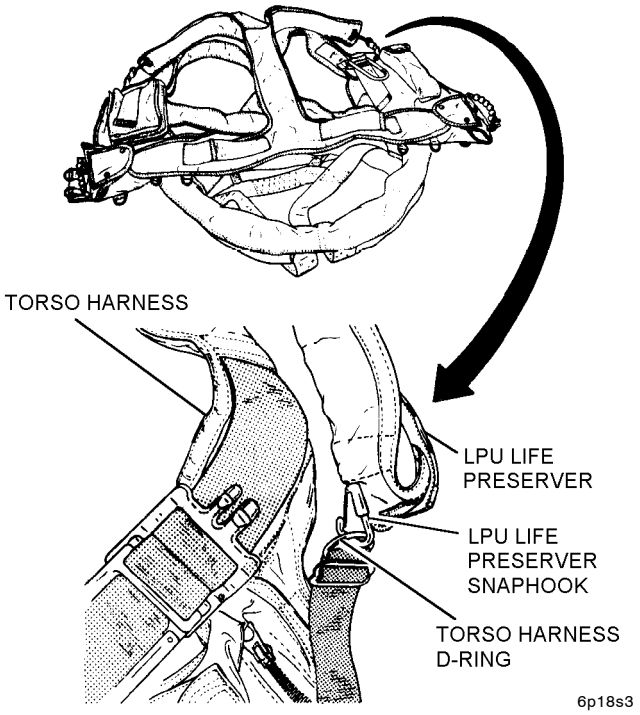

Step 3 - Para 6-18

4. Don torso harness and LPU life preserver as one assembly.

5. Reeve and tighten chest strap.

6. Secure torso harness/LPU assembly with slide fastener.

7. Check adjustment on all straps. See Figure 6-7.

6-19. DONNING THE PCU-SERIES TORSO HARNESS WITH ATTACHED LPFC FLOTATION COLLAR.

CAUTION

While wearing the Low Profile Flotation Collar, ensure SV-2B shoulder straps are routed beneath flotation bladders.

6-20. MODIFICATIONS.

6-21. The SV-2B survival vest shall be updated by comparing the configuration of the assembly with the directives listed in Table 6-2. Repairs, fabrications, and installations to maintain serviceability are listed in Table 6-3.

6-22. MAINTENANCE.

6-23. Repairs or other maintenance actions required shall be performed by organizational level or above. All maintenance actions and inspections shall be recorded on the appropriate form in accordance with COMNAVAIRFORINST 4790.2.

6-24. SPECIAL INSPECTION. The Special Inspection shall be performed by organizational level or above upon issue prior to placing the SV-2B in service and every 90 days thereafter. To perform the Special Inspection proceed as follows:

NOTE

The Special Inspection interval for the SV-2B Survival Vest assigned to P-3 selected air reserve aircrewmembers has been extended to 180 days vice 90 days, providing survival vests are stowed under controlled conditions.

1. Visually inspect survival items in accordance with the applicable chapter of NAVAIR 13-1-6.5.

2. Verify condition of vest by performing the following tasks:

a. Inspect cloth and webbing for cuts, tears, fraying, and contamination.

b. Inspect stitching for security.

c. Inspect hook and pile tape for damage and security.

d. Inspect slide fasteners for damage, security, and ease of operation. Inspect thong pull tabs for presence and security of attachment.

e. Inspect hardware for security, corrosion, dents, burrs, distortion, sharp edges, and, if applicable, ease of operation.

f. Ensure that snaphooks on leg straps are P/N MS51828-3B, 1-inch, black, brass snaphooks. Replace any other snaphook with this hook.

g. Inspect configuration for incorporation of all SV-2B features.

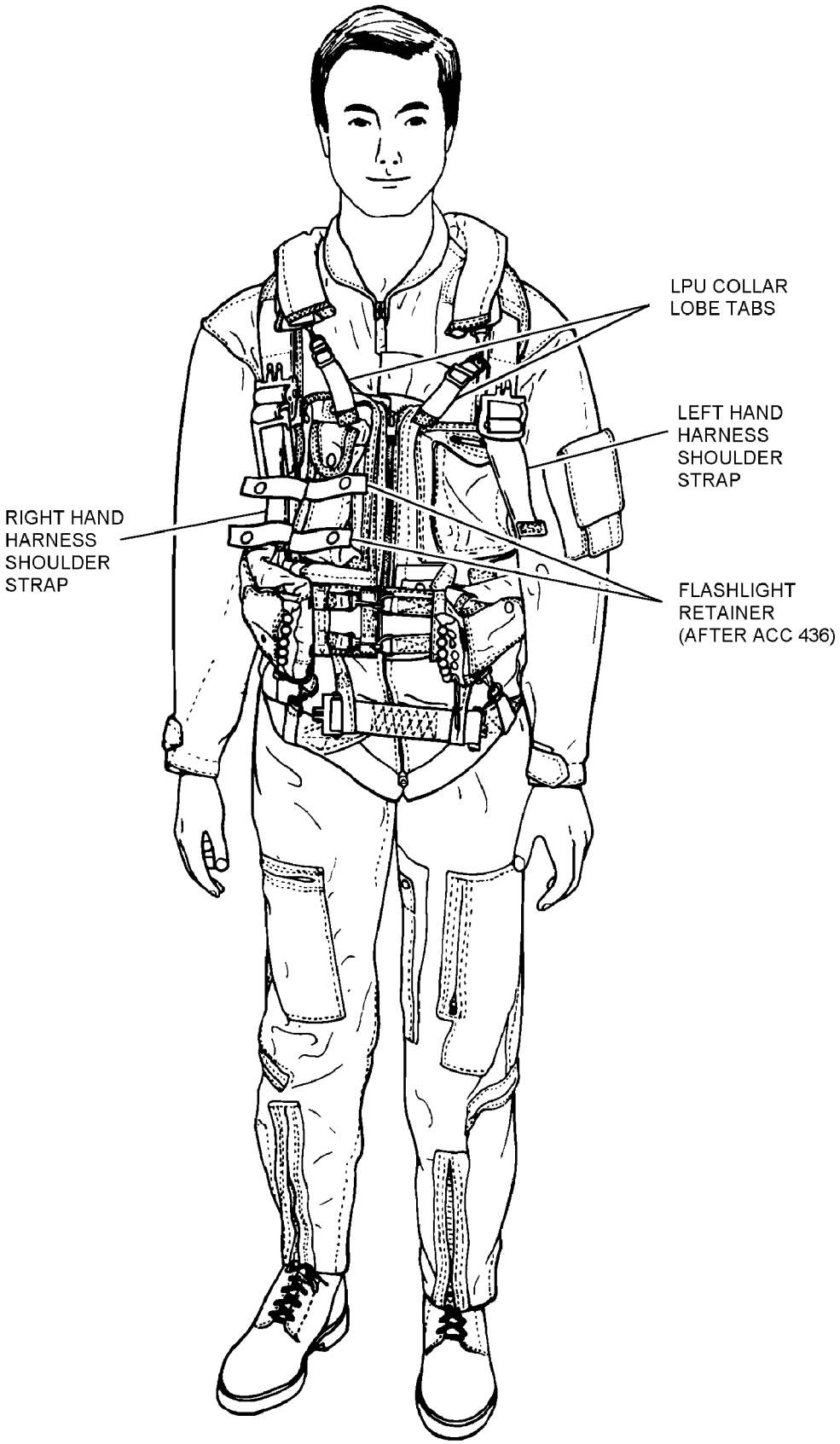

6-9

Figure 6-7. Donned PCU-Series Torso Harness Modified IAW ACC 380 and LPU Life Preserver

Table 6-2. SV-2B Directives

Description of Modification	Application	Modification Code
Fabrication of Flashlight Attachment Straps	All SV-2B Survival Vests	66-436
Installation of Extension Panel (Notes 1 and 4)	SV-2B Survival Vests used by patrol aircrews	66-522
Installation of Extension Panel at Organizational Level	SV-2B Survival Vests used by patrol aircrews	66-522 Amend 1
Modification of Flare/Pistol Pocket to accommodate SRU-40/P Helicopter Aircrew Breathing Device (HABD)	SV-2B Survival Vests used with all helos, E-2 and C-2 aircrews	66-493
Modification of SV-2B Survival Vest to accommodate large frame pistol.	SV-2B Survival Vests used by all USN/USMC rotary using, E-2 and C-2 aircrews	66-513
Modification of SV-2B/CMU-23/P to accommodate USMC helicopter aircrew	A/P22P-9A(V) CBR Protective Assembly	66-616 Amend 1
Modification of SV-2B Survival Vest to accommodate SRU-40/P HABD	SV-2B Survival Vests used by all USN/USMC helo, E-2C, and C-2A aircrews.	66-638
Modification of Extension Panel addition of P-3 and Rotary Wing Aircrew Body Armor	All SV-2B (CMU-21/P22P-7(V)) Survival Vests worn by aircrewmembers of all P-3 series and Rotary Wing Aircraft.	66-522 Amend 2

Notes:
1. Upon incorporation of ACC 522 vest, as amended, is reidentified as a CMU-21/P22P-7(V) P/N 67A100H41-1. (See Section 6-2.)
2. Upon modification IAW ACC 616 reidentify as CMU-23A/P, P/N 1774AS300-1.
3. Upon modification in accordance with ACC-638 the part number for the SV-2B Survival Vest shall be 67AS100D2-601.
4. See NAVAIR 13-1-6.7-1 for aircraft applications and authorized configurations of the vest and body armor.

h. Refill water bottles with clean water. Do not use soap to clean bottles.

NOTE

Water bottles should be refilled at least every 30 days between the calendar inspection by the aircrewmember.

i. Ensure completion of inspection: ensure that any discrepancies found were corrected.

3. If cleaning is necessary, follow steps listed in paragraph 6-25.

4. If cleaning is not necessary, repack vest in accordance with paragraph 6-28.

5. Document inspection in accordance with COMNAVAIRFORINST 4790.2.

6-25. CLEANING. To clean an SV-2B, proceed as follows:

Materials Required

Quantity	Description	Reference Number
As Required	Detergent, Laundry	Commercial

1. Mix a proper strength solution of detergent using detergent manufacturer's recommendation.

CAUTION

Ensure that all survival items are removed from vest.

2. Immerse SV-2B in solution and allow to soak for five minutes. Agitate gently for two minutes. Drain, do not wring.

3. Rinse vest in cool, fresh water until all traces of detergent are gone.

Table 6-3. Repairs/Fabrications/Installations

Description of Repairs/Fabrications/ Installations	Application	Paragraph
Attachment of heat shrink tubing to LPU-21 Life Preserver during SV-2B attachment.	All SV-2B Vests used in non-ejection seat equipped aircraft.	6-16
Fitting and Procurement of the Leather Shoulder Holster.	All SV-2B (CMU-21/P22P-7(V)) Survival Vests.	6-27
Fabrication of Pocket Assy for SRU-40/P HABD.	All SV-2B used in helo, E-2C, and C-2A aircraft.	6-32
Fabrication and Installation of Helicopter Rescue Strap.	All SV-2B not worn with PCU series torso harness (Note 1).	6-40
Fabrication of Oxygen Hose Securing Tab Subassembly.	All SV-2B Survival Vests.	6-41
Removal of Knife Sheath, Flare Gun, and Holster Pocket Assembly.	All SV-2B Survival Vests used in AV-8 Series aircraft.	6-42
Fabrication of SRU-40/P HABD tether.	All SV-2B Carrying SRU-40/P HABD bottle.	6-43
Fabrication of Slide Fastener Thongs.	All SV-2B Survival Vests.	6-45
Modification of SV-2B vest in accordance with ACC 513.	All SV-2B Series Survival Vests.	6-47
Fabrication of the Hydration/Optional Equipment Pocket.	All SV-2B (CMU-21/P-22P-7(V)) Survival Vests.	6-62
Modification of SV-2B IAW ACC 616.	All SV-2B vests used by USMC aircrews of CH-46D/E, CH-53D/E, MH-53E, and UH-1N helicopters who are equipped with A/P23P-14A(V) Respirator Assembly and all other USN/USMC rotary wing aircrew who are equipped with the A/P22P-14(V)1 Respirator Assembly.	6-74

Notes: 1. Those personnel who are dual-qualified in both ejection seat and non-ejection seat aircraft should have the rescue strap installed on their SV-2B vest.

CAUTION

Do not use dryer; do not hang in direct sunlight.

4. Hang vest by shoulder harness straps in a dry, well-ventilated area until dry.

5. Repack vest in accordance with paragraph 6-28.

6-26. PROCUREMENT AND FITTING OF PRU-60/P22P-15 OR PRU-60A/P22P-15 SOFT BODY ARMOR.

NOTE

The PRU-60/P22P-15 soft armor and side inserts must be ordered direct from Protective Materials Company, 14040 N.W. 58 Court, Miami Lakes, FL 33014. 305-820-4414.

Materials Required

Quantity	Description	Reference Number
1	PRU-60/P22P-15 Body Armor, Soft, Small Arms Protective (S, M, LG, X-LG)	See Note
	-or-	

Materials Required (Cont.)

Quantity	Description	Reference Number
	PRU-60A/P22P-15 Body Armor, Soft	MIL-B-29605
1	Small Arms Protective (MED)	NIIN 01-441-2993
1	Small Arms Protective (LG)	NIIN 01-441-2996

NOTE

Fitting, maintenance and cleaning instructions for PRU-60/P22P-15 Soft Body Armor can be found in Chapter 7 and for the PRU-60A/P22P-15 Soft Body Armor in NAVAIR 13-1-6.7-4.

1. When donning the soft armor ensure that it is worn under the survival vest. The front panel is readily identified by the green pile fastener tape and the hard armor flap pocket. The flap pocket is for the hard armor insert only and is not to be used with the SV-2, CMU-21/P22P-7(V) application.

2. Upon donning the soft armor, close the survival vest front entrance slide fastener over the soft armor. If the addition of the soft armor makes the SV-2B to tight to close, the hydration/optional equipment pocket may be used as an expander to the vest or the vest may be reconfigured in accordance with Section 6-2.

WARNING

Survival vests modified by ACC 522 shall not be used in aircraft equipped with ejection seats.

NOTE

If the CMU-21/P22P-7(V) or the hydration/optional equipment pocket is used to accommodate the addition of body armor, the LPU-27/P or LPU-35/P Life Preserver must be used in lieu of the LPU-21 Series Life Preserver.

6-27. PROCUREMENT AND FITTING OF THE LEATHER SHOULDER HOLSTER WITH THE SV-2B, CMU-21/P22P-7(V) SERIES SURVIVAL VESTS.

Materials Required

Quantity	Description	Reference Number
1	Holster, Leather Shoulder	7791527 NIIN 00-973-2353

NOTE

Refer to NAVAIR 13-1-6.5, for maintenance and repairs of the leather shoulder holster.

1. The leather shoulder holster (Figure 6-8) is donned under the aircrewmember's left arm, allowing for a right handed release. The chest strap is run around the back and snapped around the chest to the D-ring sewn to the top edge of the holster.

2. Adjustments are made around the left shoulder by tightening or loosening the straps and re-engaging the adjustment buckle hook prong. The circumference adjustment is made with the chest strap adjustment buckle in the same manner as the shoulder strap. The harness assembly should be made as snug as possible without causing discomfort for the aircrew member in both a standing and sitting position. Do not remove any extra harness strap after fitting aircrew.

3. Tie the two leather thongs so the knot is on the top of the strap to avoid creating hot spots for the aircrew member.

4. Upon completion of the fitting procedure, inspect entire harness and holster assembly to ensure all adjustments are properly tied off and secured. If additional holes are required to affect a proper fit, use a rotable star punch or equivalent, ensuring the size of the holes cut do not exceed the size of the holes the manufacture initially made for the harness strap adjustment holes.

5. The leather shoulder holster must be worn over all flight clothing, soft armor and torso harnesses but under the survival vest (Figure 6-9 thru Figure 6-11).

6-8

Figure 6-8. Leather Shoulder Holster

6-9

Figure 6-9. Soft Armor With Leather Shoulder Holster

6-10

Figure 6-10. Torso Harness With Leather Shoulder Holster

6-9d

Figure 6-11. Hydration/Optional Equipment Pocket With Soft Body Armor and Leather Shoulder Holster

6-28. RIGGING AND PACKING. To rig and pack an SV-2B, proceed as follows:

Materials Required

Quantity	Description	Reference Number
As Required	Cord, Nylon, Type I (with Core Strands Removed)	MIL-C-5040 NIIN 00-240-2154
	-or-	
	Type IA (Coreless)	NIIN 00-292-9920
21 Inches	Webbing, Textile, Nylon, Type II, 1-inch Wide	MIL-W-4088 NIIN 00-260-6910
21 Inches	Tape, Textile and Webbing, Reinforcing Nylon, Type IV, 1-inch Wide	MIL-T-5038 NIIN 00-261-8579
As Required	Bag, Plasitc	NIIN 00-837-7757
As Required	Tape, Packaging 2-inch	NIIN 00-266-5016

NOTE

Refer to NAVAIR 13-1-6.7-1, and carefully select the survival items to be stowed in the SV-2B.

1. Ensure that all survival equipment selected has been inspected in accordance with NAVAIR 13-1-6.5.

2. Lay out vest and survival items on a clean table.

WARNING

Additional items may be added to the SV-2B, at discretion of aircrewmember. In no case shall additional items exceed 5 pounds total weight. Each additional item shall be secured to the SV-2B with a 48-inch length of nylon cord and items shall be stowed to maintain equal weight balance of the vest.

NOTE

Refer to glossary for directions for tying a bowline knot. The right angle flashlight, P/N MX-991/U, shall be attached to the survival vest using elastic straps and snaps sewn to the outside of the survival vest and will not be secured to the vest with a retaining line. All other items will be secured to the vest using a bowline knot and a 48-inch length of nylon cord. Sear the cut ends to eliminate cord fraying. Take the remaining line secured with a lightweight rubber band and stow in vest in accordance with Figure 6-12.

3. Fill water bottles, if carried, with drinking water.

NOTE

Two tabs are provided for weapon security in pistol pocket behind sheath knife and flare kit. The short tab is used to secure the snubnose revolver and the long tab secures the standard .38 caliber revolver.

4. If weapon is carried, stow 9 rounds of ammunition in each ammunition keeper.

5. Tie a 48-inch length of nylon cord to the pocket grommet and retaining loop on SDU-5/E marker distress signal.

NOTE

If the SDU-39/N Distress Strobe Light is used, the nylon cord shall be passed through the hole below the ON/OFF switch of the SDU-39/N and through the loop formed by the folded end of the lanyard. Refer to paragraph 6-46 for fabrication and installation of the SDU-39/N lanyard.

6. (SDU-5/E only). Cut and sear 12-inch length of 1-inch webbing and place through retaining loop on distress signal light and draw ends even. Stitch a single row 1/8 inch from edge around all edges and as close as possible to loop. Double stitch across webbing next to loop. Cross boxstitch open end. See Figure 6-13.

NOTE

Ensure plastic switch protective cap is removed from actuation switch on marker distress light (SDU-5/E).

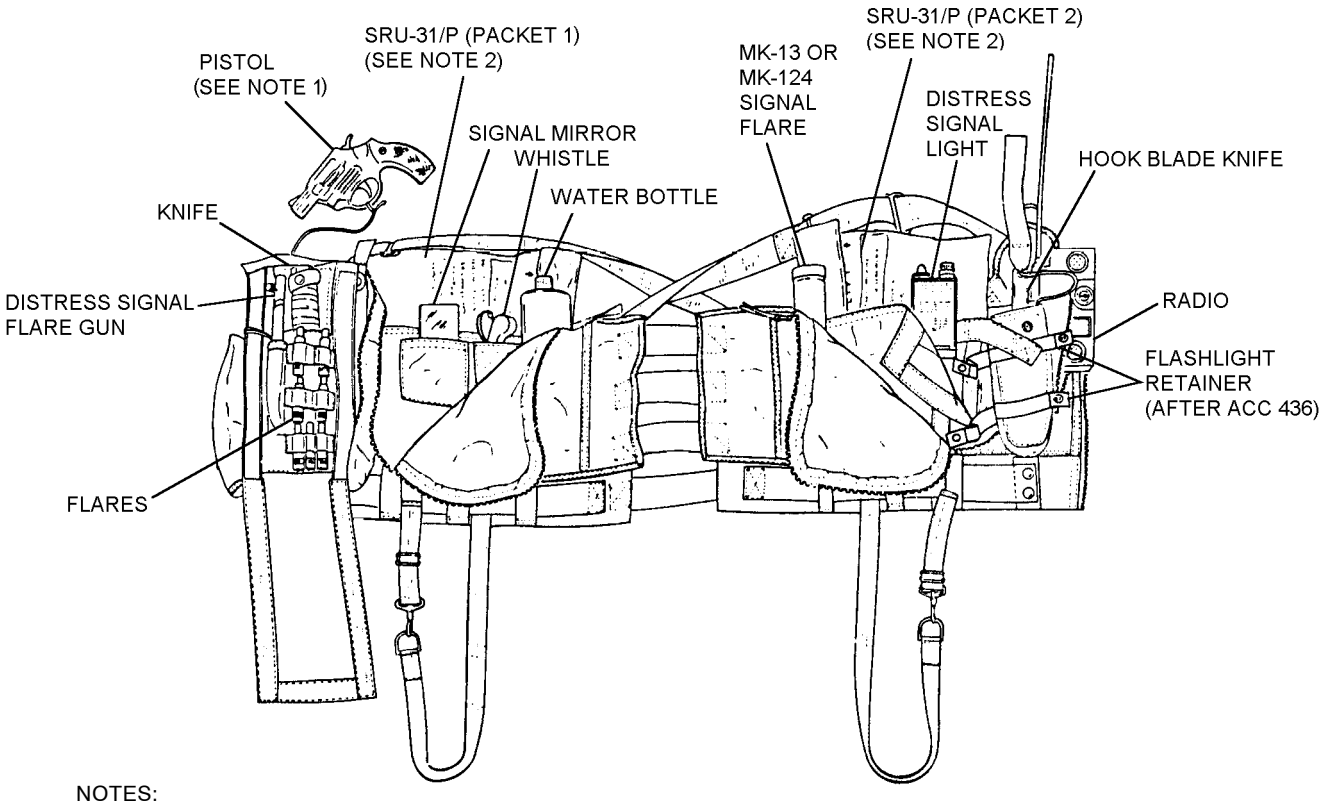

NOTES:

1. WITH NEW PRODUCTION CHANGE OF SV-2B (67A100D2-51), LARGER PISTOLS MAY BE CARRIED THAN THE SNUB-NOSE, 2-INCH BARREL, .38 CAL. REVOLVER SHOWN HERE. NEW SNAP-IN HOLSTER POCKETS WITH EXTRA-AMMUNITION KEEPERS WILL ACCOMMODATE PISTOLS SUCH AS THE 9MM BERETTA OR .38 CAL. REVOLVER WITH 4-INCH BARREL. PISTOL POCKETS CAN BE MODIFIED IN ACCORDANCE WITH PARAGRAPH 6-44 TO ACCOMMODATE LARGE FRAME PISTOLS.
2. FOR DETAILS OF ITEMS STOWED IN SRU-31/P KITS, SEE NAVAIR 13-1-6.5.
3. REFER TO NAVAIR 13-1-6.7 SERIES FOR SPECIFIC ITEMS TO BE CARRIED.

6-10

Figure 6-12. Location of Survival Items in SV-2B

7. Install light in right side of vest dome end down. Ensure that the tab is positioned toward the center slide fastener and is exposed from the strobe light compartment but not from the outer pocket cover slide fastener.

8. Remove the AN/PRC-90 Radio Set from the radio stowage pocket and remove nylon cord securing radio set to pocket.

9. Prior to installing AN/PRC-90-2 Radio Set, verify initial maintenance and verification requirements in accordance with NAVAIR 16-30PRC-90-2.

10. After successful completion of maintenance and verifications, ensure volume control knob is set in maximum output. Loop the radio antenna and secure it to radio with a rubber band. Install AN/PRC-90-2 Radio Set into radio storage pocket as follows.

a. Using a 48-inch length of Type I nylon cord, secure one end to the radio set and the other to the radio pocket grommet, using bowline knots.

b. Fake securing line along radio set and secure with light weight rubber band. Stow radio set in radio pocket. Close radio pocket.

11. Document in accordance with COMNAVAIR-FORINST 4790.2.

12. If AN/PRC-112(V) or AN/PRC-112B Survival Radios are used, install and stow as follows:

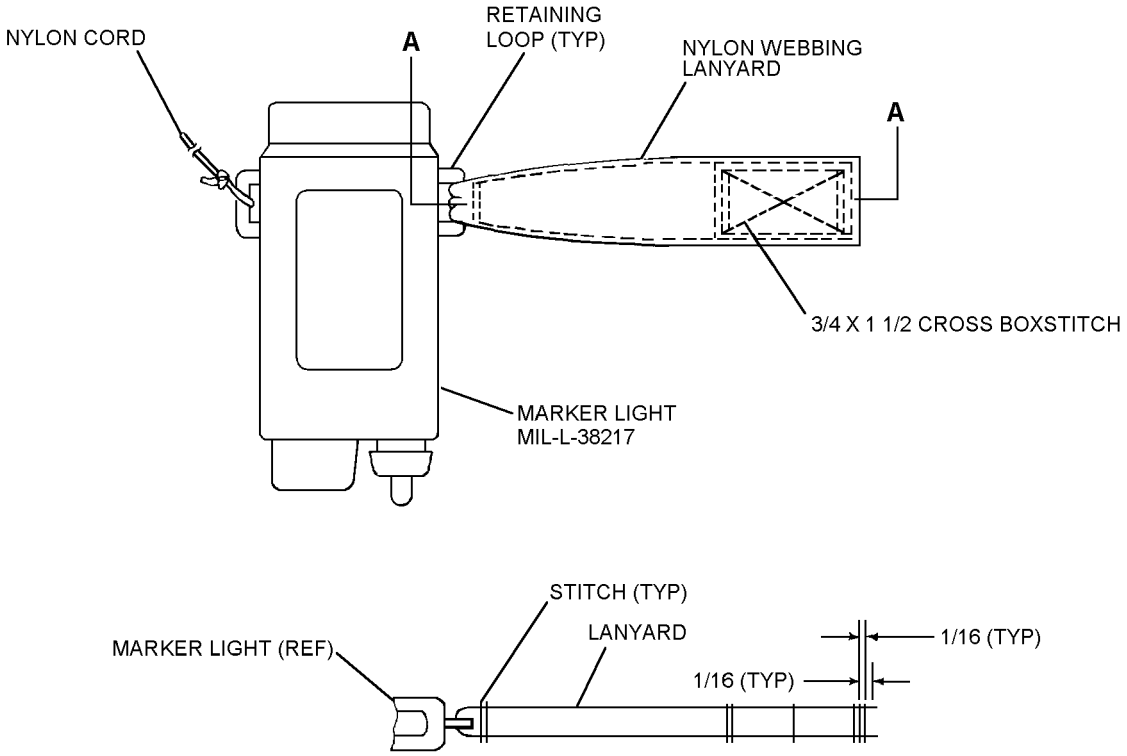

6-11

Figure 6-13. SDU-5/E Distress Signal Light Lanyard

NOTE

Steps a through h apply to AN/PRC-112B radios only. AN/PRC-112(V) radios do not require use of this plate.

a. Cut 1 X 2 3/8-inch (+1/8 inch, minus 0 inch) plate from any grade aluminum 0.090 (±0.010 inch) thick.

b. Radius corners and deburr edges.

c. Cut two 2 3/8-inch lengths of 3/4-inch duct tape (NIIN 01-242-6473 or commercial equivalent). Center one length of tape lengthwise along one 2 3/8-inch side of the plate and the other length of tape lengthwise along the other side of the plate. Fold tapes over onto the plate.

d. Cut two 1-inch lengths of 3/4-inch duct tape. Center one of the 1-inch tapes lengthwise along each of the 1-inch ends of the plate and fold over onto the plate.

e. Cut a 6 1/2 inch-length of 1-inch duct tape. Fold one end of the tape back on itself 1 inch to form a pull tab.

f. Place tape cut in step e on flat surface with adhesive side up and folded pull-tab end to the right. Measure in two inches from the right end of the tape and place the plate made in steps a through d on the tape to the left of the two-inch measured point. (There will be open adhesive areas of tape on each side of the plate.)

NOTE

Do not cover antenna with tape.

g. Place PRC-112 series radio on work bench with buttons facing up and the word, TALK, closest to and to the right of the technician. Place the plate, prepared in preceeding steps, over the buttons with the folded end of the tape on the right side of the radio just below the PUSH-TO-TALK button. Fold the tape over and press it to the right side of the radio body.

h. Fold tape on the left side over and press it to the left side of the radio body.

i. Cut a 48-inch length of Type I, nylon cord and sear ends.

j. Secure one end of cord to the grommet in the survival vest radio pocket forming a 2-inch loop around the grommet and tie off using bowline knot.

k. Secure one end of the nylon cord to the PRC-112 radio webbing or V-ring using a 2-inch loop around the webbing or V-ring and tie off using bowline knot.

l. For AN/PRC-112 Series radios, bagging is not required when using battery P/N 1794AS0953-/U, NSN 6135-01-257-9592. All other batteries will be double bagged in two 12 X 24-inch ziplock plastic bags, NIIN 00-836-7757 or commercial equivalent.

m. Remove as much trapped air as possible from bag and tape over the closed ziplock closure using 2-inch duct tape.

NOTE

The Type I or IA cord can exit the bag at any point along the seal line. Location of exit point is not critical.

Bagged radio with excessive air trapped in bag will be difficult to stow in radio pocket. If difficulty is encountered during stowage, continue to press radio into radio pocket until sufficient air escapes to permit radio pocket flap closure.

n. Place bagged radio into a second ziplock bag and seal closure using duct tape as in step m above.

o. Fake securing line and secure with lightweight rubber band.

p. Stow radio in radio pocket.

q. Close radio pocket flap.

NOTE

AN/PRC-112 radios and batteries are currently undergoing rework/redesign to eliminate water leakage.

Bagging of radio will not make it waterproof, only water resistant.

Aircrew should not remove radio from ziplock bag until after they are in liferaft.

13. Tie a 48-inch length of nylon cord to both hook blade knife (if carried) as shown in figure 6-14 and to grommet on right shoulder strap with a bowline knot.

14. Cut and sear 9-inch length of 1-inch nylon webbing and round corners of one end. Sear a 3/8-inch hole 5 inches from rounded end. Place square end through loop, fold over 1 inch and double stitch 1/8 inch from folded end. See Figure 6-14.

15. Stow hook blade knife in pocket on right side of vest with hook down and in open position, and 3/8-inch hole over radio pocket eyelet snap. Pass radio pocket flap through looped radio antenna and snap in place with hook blade knife tab extending.

16. Cut a 60-inch length of nylon cord and sear ends. Tie a bowline knot to eyelet attachment of flare gun from MK-79 MOD 0 distress signal kit. Tie other end of line to existing line attached to inside of flare gun pocket using a bowline knot.

WARNING

Pyrotechnics must not be taken to the barracks and, when removed from bandolier, should be returned to original container. Ensure that the flare gun from MK-79 MOD 0 signal kit is empty of flares. To prevent accidental firing, ensure knife is installed prior to installing flares in vest.

17. Insert signal flare gun into flare gun pocket after complying with NAVAIR 13-1-6.5. Accordion-fold excess length of line and secure it with a lightweight rubber band. Ensure that flare gun is stowed with knurled knob back (cocked position) and empty of flares.

CAUTION

Ensure that protective plastic caps (NIIN 00-324-9158) are installed on flares before installation into webbing keepers.

18. Install signal flare gun flares into webbing keepers.

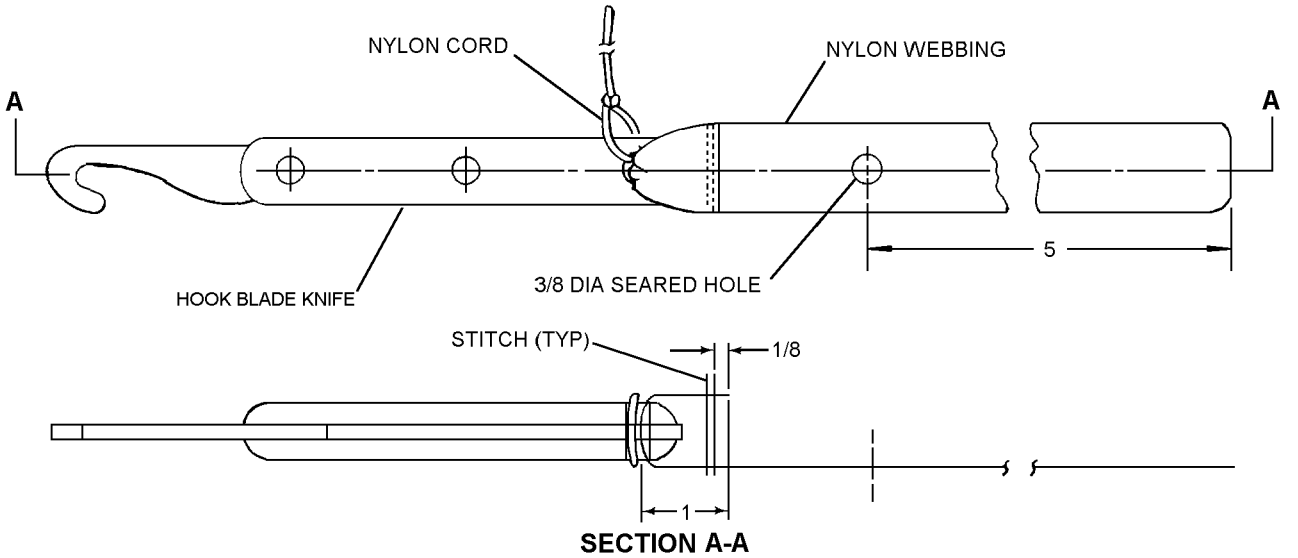

Figure 6-14. Hook Blade Knife Attachment

NOTE

If plastic bandolier is available, it is acceptable to stow it in the SV-2B instead of stowing flare cartridges in webbing keepers. Protective plastic caps are not required when bandolier is used.

19. If plastic bandolier is available, secure it to SV-2B as follows:

a. Remove a 48-inch length of cord from bandolier and replace with a 12-inch length of nylon cord and sear ends.

b. Tie a bowline knot to hole provided in one end of bandolier and tie other end to top center webbing keeper.

20. Prior to installing MK-13 MOD 0 or MK-124 MOD 0 distress signal, cut an 80-inch length of nylon cord and sear ends. Tie an overhand knot in one end. Wrap end of cord two turns around one end of signal flare and tie with a surgeon's knot. Turns of cord shall overlap with all knots positioned snugly against each other. Route cord to opposite end of signal flare and tie in same manner as above. Cord between ties shall be drawn tight. Secure free end of cord to distress signal light grommet with a bowline knot.

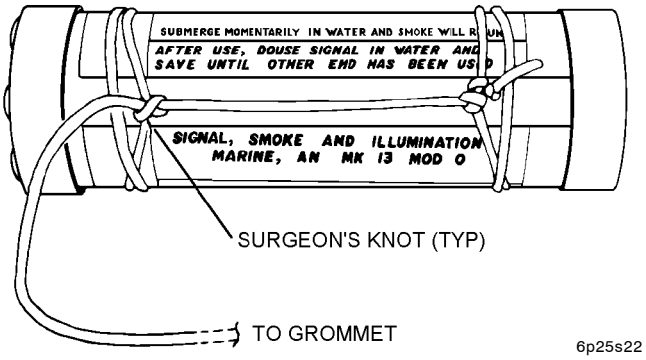

Step 20 - Para 6-28

21. Secure all additional items with a 48-inch length of nylon cord and stow in vest balancing weight.

6-29. REPAIRS AND FABRICATIONS. Repairs and fabrications shall be performed at the lowest level of maintenance possible. Table 6-3 lists the common repairs and fabrications to maintain serviceability.

6-30. REPAIRS. Any damaged portion of an SV-2B may be repaired or replaced at the discretion of the repairing activity. Refer to applicable documentation, specifications, or drawings for construction details.

6-31. FABRICATIONS. The following fabrications are performed to the SV-2 series to maintain the serviceability of the assembly.

6-32. FABRICATION OF POCKET ASSEMBLY FOR HELICOPTER AIRCREW BREATHING DEVICE (HABD), SRU-40/P. The HABD Pocket Assembly consists of a Bottle Pocket (Figure 6-15) and a Hose Pocket Panel (Figure 6-16) which are fabricated as follows:

Materials Required

Quantity	Description	Reference Number
As Required	Cloth, Nylon Duck	MIL-C-7219, NIIN 01-173-4436
As Required	Fastener Tape, Hook, 1-Inch	MIL-F-21840, NIIN 00-106-5973
As Required	Fastener Tape, Pile, 1-Inch	MIL-F-21840, NIIN 00-106-5974
As Required	Webbing, Textile, 1-Inch	MIL-T-5038G, NIIN 00-261-8579
As Required	Tape, Textile, 1-Inch	MIL-T-5038G, NIIN 00-753-6144
As Required	Thread, Nylon, Size E, Sage Green	V-T-295, NIIN 00-204-3884
2	Grommet, Size 00	MS20230B20, NIIN 00-291-0302
1	Strap, Tie Down	MIL-S-23190, NIIN 00-111-3208
1	Beaded, Inflation Handle	975AS122-1 (Note)
1	Breathing Device, Helicopter Aircrew, SRU-40/P	1586AS301-1

Note: Obtain from Beaded Handle Assy (P/N 975AS121-11, NIIN 01-120-4752) or salvage from LPU-21 or LPU-23 beaded handles.

NOTE

All cut edges of nylon webbing and binding tape shall be seared to prevent fraying; use care not to form sharp edges. Unless otherwise specified all stitching shall be Fed Std Type 301 lockstitch, 7 to 10 stitches per inch with back or over stitch a minimum of 3/4 inch. Stitching shall be 1/8 inch from edge unless otherwise specified. All binding tape shall be sewn using two rows of stitching 1/8 inch apart. Use a china marker or equivalent for all markings.

6-33. Fabrication of Bottle Pocket. Refer to Figure 6-15 and fabricate the bottle pocket as follows:

1. Measure and cut a piece of nylon duck cloth 4 3/4 X 8 inches.

2. Orient fabric so shorter 4 3/4-inch edges are at top and bottom.

3. Bind each 8-inch edge with 1-inch textile tape.

4. Fold the fabric and align so 4 3/4-inch edges meet.

5. Stagger placement of the seared edges to be side by side rather than stacked to reduce the number of layers.

6. Sew seared edges together with single row of stitches 1/4 inch from edge.

7. Cut 7 1/4-inch length of 1-inch webbing.

8. Orient webbing so ends (1-inch edges) are at top and bottom.

9. Mark a centerline the full 7 1/4-inch length of the webbing.

10. Orient the panel so the folded edge is on the left.

11. Align the seared edge of the duck cloth panel along the centerline of the webbing with the bottom of the panel even with the bottom of the webbing.

12. Sew the panel in place with two rows of stitches side by side 1/4 inch from the seared edge with minimum backstitch of 1-inch.

13. Cut a 12 3/4-inch length of 1-inch webbing.

14. Cut a 2-inch length of 1-inch pile tape.

15. Place pile tape on top of webbing at one end aligning the 1-inch edges and sew in place.

16. Turn webbing over so pile tape is face down and to the right.

17. Measure and mark the webbing at 3, 4, 7, and 10 inches from the right edge of the webbing.

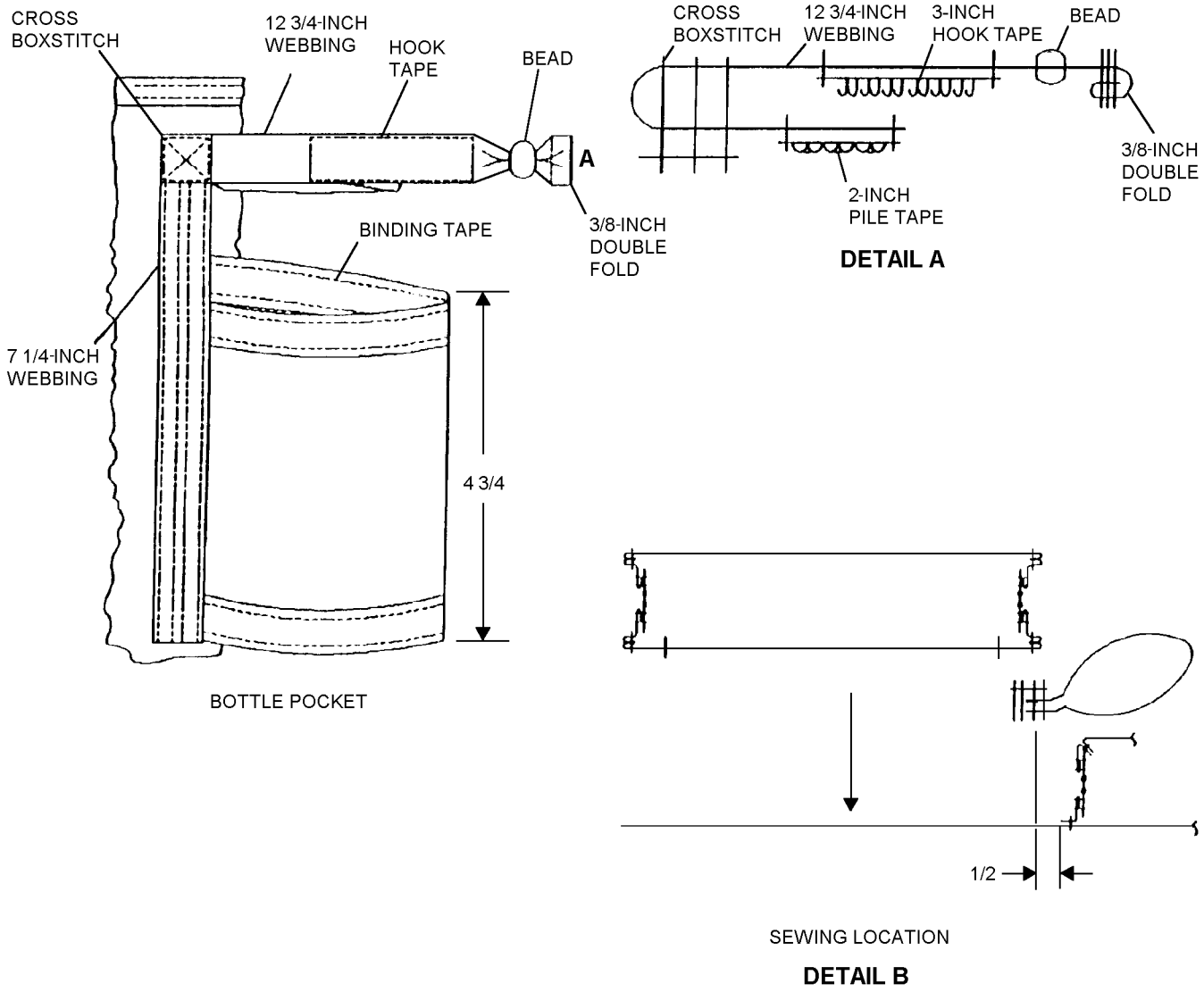

6-13

Figure 6-15. SRU-40/P HABD Bottle Pocket Assembly

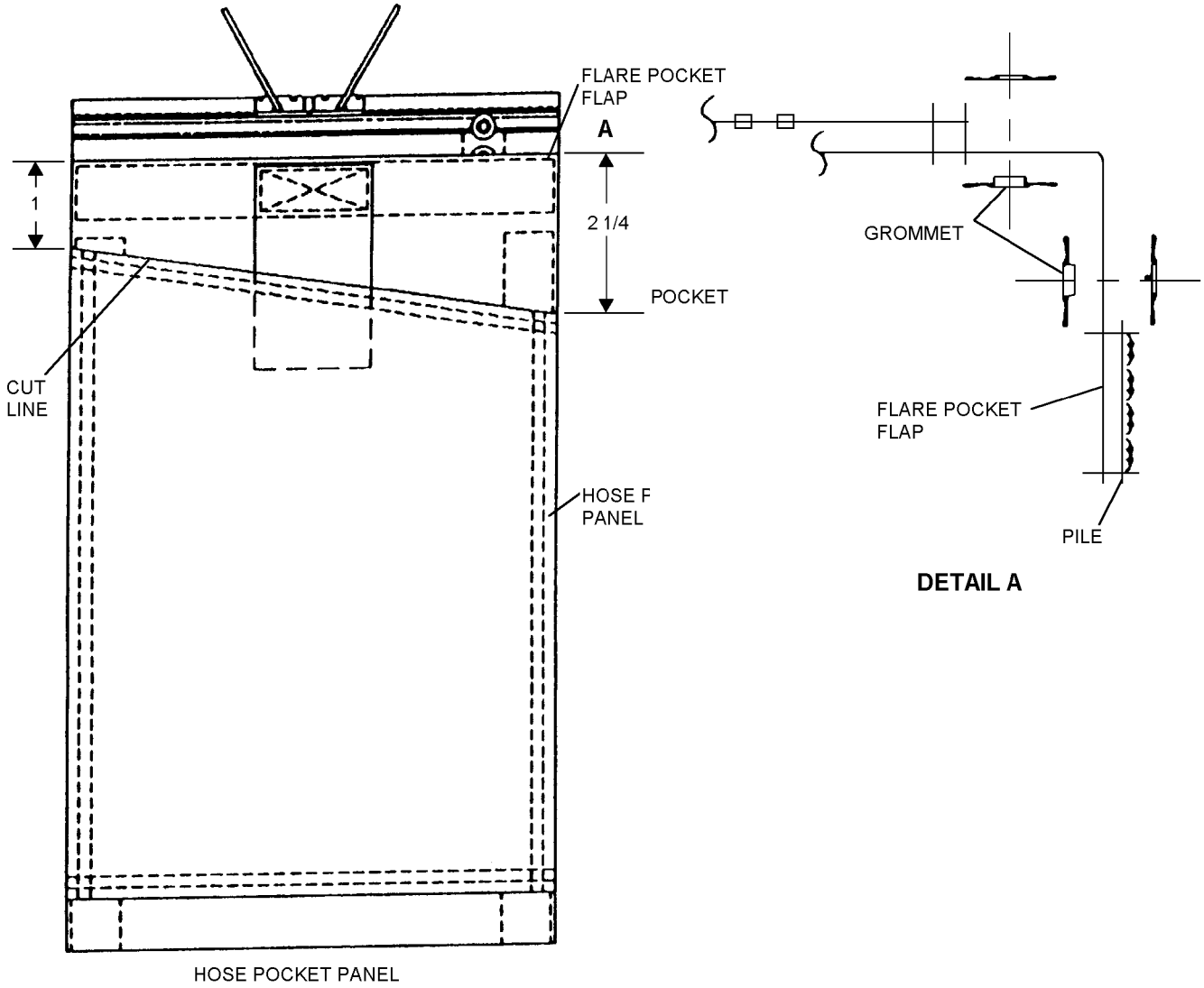

6-14

Figure 6-16. SRU-40/P HABD Hose Pocket Assembly

18. Cut a 3-inch length of 1-inch hook tape.

19. Place hook tape on webbing between the 7 and 10-inch marks.

20. Sew the hook tape in place.

21. Slide a bead onto the webbing until it touches the hook tape.

22. Double fold that end of the webbing 3/8 inch end over end.

23. Sew the fold in place using three rows of stitches placed side by side (see Figure 6-16, Detail A).

24. Orient the webbing so the hook tape is facing up and is on the left.

25. Orient the bottle panel so it's webbing is on the left and the folded edge of the panel is on the right.

26. Place the 7 1/4-inch webbing strip between the 3 and 4-inch marks on the beaded strip so the two lengths of webbing lay perpendicular to each other.

27. Align the top of the 7 1/4-inch strip so it is even with the top edge of the beaded strip.

28. Fold beaded webbing at the 4-inch mark so the 7 1/4-inch webbing strip is the middle layer.

29. Sew both webbing strips together using a 3/4 X 3/4-inch crossbox stitch.

6-34. Fabrication of the Hose Pocket Panel. Refer to Figure 6-16 and fabricate the Hose Pocket Panel as follows:

1. Measure and cut a 10 X 6 1/2-inch piece of nylon duck cloth.

2. Orient the fabric so the 6 1/2-inch edges are at the top and bottom.

3. Measure and mark the right edge 1 1/4 inches down from the top right hand corner.

4. Draw a cut line from the top left-hand corner to the 1 1/4-inch mark on the right edge.

5. Cut fabric along the cut line.

6. Double fold top and bottom edges 3/8 inch to the back side of the fabric.

7. Stitch a hemline 1/8 inch from the outer edge and another 1/4 inch from the outer edge.

8. Single fold the side edges 3/8 inch to the back side of the fabric.

9. Sew edges 1/8 inch from folded edge.

6-35. Attachment of Hose Pocket Panel to Pistol Pocket. Refer to Figure 6-16 and proceed as follows:

NOTE

Remove SRU-40/P from the pistol pocket and return it to supply in "F" condition. Then remove stitching that secures SRU-40/P retaining strap inside the pistol pocket; remove and discard the strap.

1. Unfasten the flare pocket flap on the pistol pocket.

2. On the face of the flare pocket flap, measure and mark the left edge 1 inch down from the top left corner.

3. On the face of the flare pocket flap, measure and mark the right edge 2 1/4 inches down from the top right corner.

4. Position the hose pocket panel on the outside face of the flare pocket flap so the top left corner of the panel is aligned at the 1-inch mark and the top right corner is aligned with the 2 1/4-inch mark.

5. Sew the left and right sides of the panel in place on the flare pocket flap using one row of stitches 1/8 inch from the outer edge and another row 1/4 inch from the outer edge. Reinforce using minimum of 1 inch of backstitching.

6-36. Setting Grommet on Pistol Pocket. Refer to Figure 6-16 and proceed as follows:

1. Unfasten upper flap of flare pocket.

2. Flip it over and lay it flat so the pile tape is facing up and is at the bottom.

3. Measure and mark the right-hand edge 1 1/4 and 1 3/4 inches up from the bottom right-hand corner.

4. Measure and mark grommet locations 1 1/2 inches to the left of the 1 1/4-inch and 1 3/4-inch marks.

5. Punch holes at grommet location marks.

6. Set grommets in the two holes.

6-37. Attachment of the Bottle Pocket. Refer to Figure 6-15, and proceed as follows:

1. Locate the space between the attachment point of the pistol pocket to the vest and the bottom edge of the slide fastener tape of the general pocket.

2. If there is not a minimum of 1/2 inch of space between the pistol pocket attachment point and the bottom edge of the slide fastener tape of the general pocket, carefully remove the stitching which secures the right-hand side of the pistol pocket to the vest to obtain necessary space.

3. Measure and mark 1/2 inch to the left of the bottom edge of the slide fastener tape of the general pocket.

4. Position the bottle pocket so the free edge of the 7 1/4-inch webbing is placed at the 1/2-inch mark to the left of the bottom edge of the slide fastener tape of the general pocket.

5. Align the top corner of the webbing strip so it is 3/8 inch below the top bound edge of the vest (see Figure 6-15, Detail B).

6. Sew the 7 1/4-inch edge of the webbing in place using three rows of stitching side by side beginning 1/4 inch from the free edge being careful not to sew beyond the existing seam line.

7. If pistol pocket stitches were removed, reattach using two rows of stitches being careful not to sew beyond the original stitch line of the bottle pocket.

6-38. Fabrication and Installation of Flashlight Attachment Straps (Figure 6-17). Fabricate flashlight attachment straps as follows:

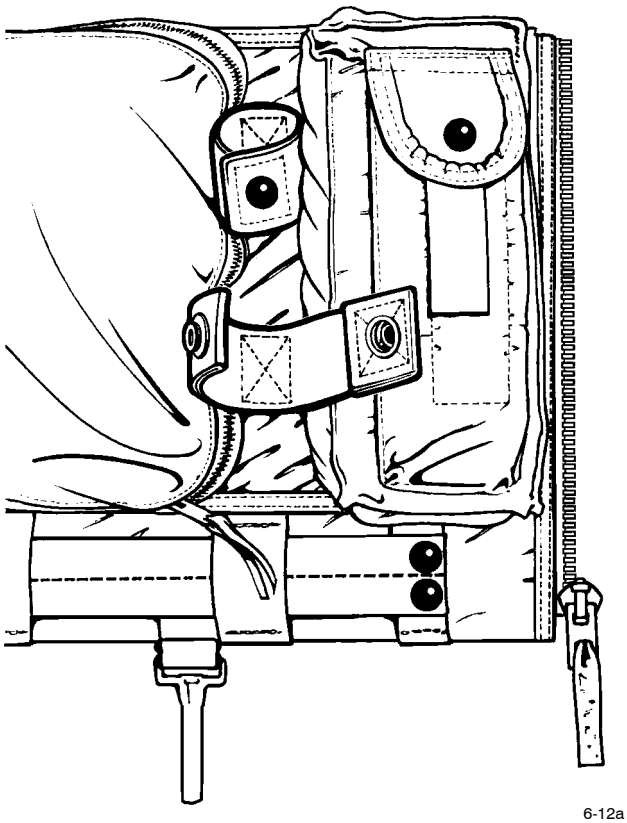

Figure 6-17. SV-2B Vest with Flashlight Keeper

Materials Required

Quantity	Description	Reference Number
As Required	Thread, Nylon, Size E	V-T-295 NIIN 00-204-3884
As Required	Webbing, Textile Elastic	MIL-W-5664 NIIN 00-262-1655
As Required	Snap Fastener, Cap	MS27983-1 NIIN 00-891-9073
As Required	Snap Fastener, Socket	MS27982-2N NIIN 00-276-4970
As Required	Snap Fastener, Stud	MS27983-3 NIIN 00-276-4908
As Required	Snap Fastener, Post	MS27983-4 NIIN 00-276-4978

NOTE

All stitching shall be in accordance with ASTM-D-6193, Type 301 lockstitch, 7 to 10 stitches per inch with 1/2-inch minimum back or overstitching.

1. Cut two 9 1/2-inch long pieces of elastic webbing.

2. On each piece of webbing, fold each end over 1 1/4 inch and stitch using a 1-inch square box x stitch. Ensure stitching comes no closer than 1/8 inch from the edges of the webbing.

3. At the intersection of the two diagonal lines of stitching, install a cap on one side of webbing and a socket on the other. Repeat this step on the opposite end of the webbing using a stud and post. Repeat this step on the other piece of elastic webbing.

NOTE

Ensure snaps are installed so elastic can wrap around the flashlight and snap with the cap and socket laying over top of the stud and post.

4. Orient both pieces of elastic webbing between radio pocket and right pocket zipper. Stitch first piece of webbing 1 3/4 inch below top of vest, using a 1/2-inch wide by 1 1/4-inch long box x stitch. Ensure the stud and post are on same side as right zipper pocket. Repeat procedure with second piece of elastic webbing attached 2 inches below bottom of first piece of elastic webbing.

5. Install right-angle flashlight.

6-39. Stowing SRU-40/P Helicopter Aircrew Breathing Device (HABD). To stow the HABD in the reconfigured survival vest proceed as follows:

1. Ensure the SRU-40/P has been inspected in accordance with NAVAIR 13-1-6.5 and is in ready-for-issue (RFI) condition.

2. Place the HABD in the new pocket.

3. Secure the strap around the neck of the bottle.

4. Route the regulator hose down through the top of the hose pocket in a single U-shaped loop, leaving the regulator out.

5. Orient the open end of the mouthpiece cover to face the entrance slide fastener of the vest.

6. Pass a plastic tie wrap through the center of the mouthpiece cover, around the top and through both grommets.

7. Secure the tie wrap so it is tight around the cover but not pinching.

8. Place mouthpiece inside mouthpiece cover and position the mouthpiece so it is between the bottle and the regulator with the regulator purge cover facing toward the entrance slide fastener of the vest.

9. Document in accordance with COMNAVAIRFORINST 4790.2.

6-40. FABRICATION AND INSTALLATION OF HELICOPTER RESCUE STRAP. To replace missing, damaged, frayed, or improperly installed rescue strap, proceed as follows:

Materials Required

Quantity	Description	Reference Number
1	Ring, Parachute Harness, V-Type	MS70102-2 NIIN 00-113-7171
58 Inches	Webbing, Nylon Type XXVII	MIL-W-4088 NIIN 00-530-1489
As Required	Cord Nylon, Type I, Class 1, No. 6	V-T-295 NIIN 00-262-2780
As Required	Thread, Nylon, Size E	V-T-295 NIIN 00-248-9715
2 Inches	Fastener Tape, Hook, Class 2, 2-Inch Wide	MIL-F-21842 NIIN 00-926-4931
4 1/2 Inches	Fastener Tape, Pile, Class 2, 2-Inch Width	MIL-F-21842 NIIN 00-926-4930

NOTE

The basic SV-2B is designed to fit chest sizes from 40 to 48 inches. Vests which have been modified to accommodate larger chest sizes must also be fitted with a longer webbing strap. At least 4 inches of webbing must remain when the vest is worn and the strap tightened.

1. Sear ends of 58-inch length of nylon webbing.

WARNING

Assure that V-ring is correctly positioned with protruding ridge against strap prior to installation. Refer to Figure 6-19. Improperly installed V-rings may not provide adequate friction to keep webbing tight during hoisting operations.

2. Install parachute harness V-ring on strap and secure by stitching as indicated in Figure 6-18. Use nylon 6-cord, five to six stitches per inch.

3. Starting at left side of vest, position strap along upper edge of vest so that fixed crossbar of V-ring is aligned with slide fastener.

4. Stitch strap along top left side of vest using size E nylon thread, 8 to 10 stitches per inch, backstitching 6 inches. Begin stitching approximately 3 inches from the slide fastener. Strap shall be stitched to outside of vest material with stitches passing through binding tape approximately 1/4 inch from the selvage edge.

5. Before stitching the webbing to the right side of the vest an allowance must be made for any stretching of the elastic webbing at the back of the vest. In most cases, the elastic webbing stretches very little, if any. Therefore, if the following precautions are taken, the webbing will not interfere with the wearing of the vest:

a. Ascertain that there is no slack in the elastic webbing before stitching the webbing strap to the right side of the vest. It is not necessary to extend the elastic webbing; however, the elastic webbing should be taut.

b. Allow approximately 1/4 inch of slack in the webbing strap that is being added before proceeding to stitch the webbing to the right side of the vest. More than 1/4 inch slack will cause the webbing to bunch up and cause discomfort.

6. Stitch the webbing to the right side of the vest in the same manner as on the left side.

7. Terminate stitching approximately 5 inches from slide fastener at front of vest. Back-stitch 6 inches.

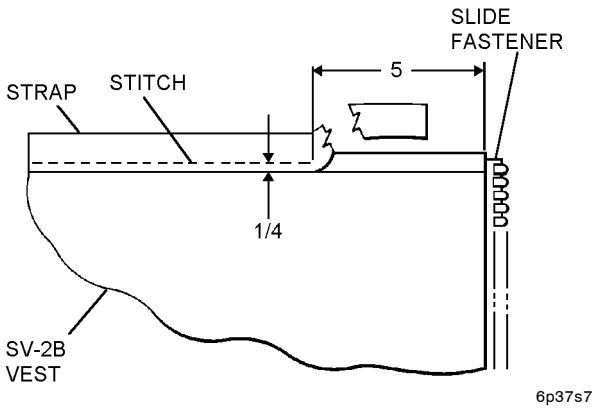

Step 7 - Para 6-40

NOTE

To determine correct position for attaching pile tape to strap, aircrewmember must don vest and route strap end through V-ring, adjusting to a comfortable fit.

8. Reeve strap through V-ring to a position for comfortable fit. Mark strap 4 3/4 inches from the fixed crossbar of V-ring. Cut and sear strap at this point. See Figure 6-19.

9. Lift strap and mark bottom webbing at V-ring; make another mark 4 1/2 inches to left.

NOTE

Machine stitching in the following steps is to be size E nylon thread, 8 to 10 stitches per inch. Backstitch exposed ends 1 inch.

10. Stitch 4 1/2-inch pile tape to upper surface of bottom strap between marks made in step 9.

11. Stitch 2-inch hook tape to under side of upper strap. Start 1/2 inch from seared end.

12. Trim selvage edge of fastener tapes after sewing to webbing.

6-41. Fabrication of Oxygen Hose Securing Tab Subassembly. To fabricate and install the securing tab, proceed as follows:

Materials Required

Quantity	Description	Reference Number
4 1/2 Inches	Nylon Tape, Tape IV, 1-Inch	MIL-T-5038 NIIN 00-261-8579
1 Inch X 1 Inch	Fastener, Pile	A-A-55126 NIIN 00-405-2263

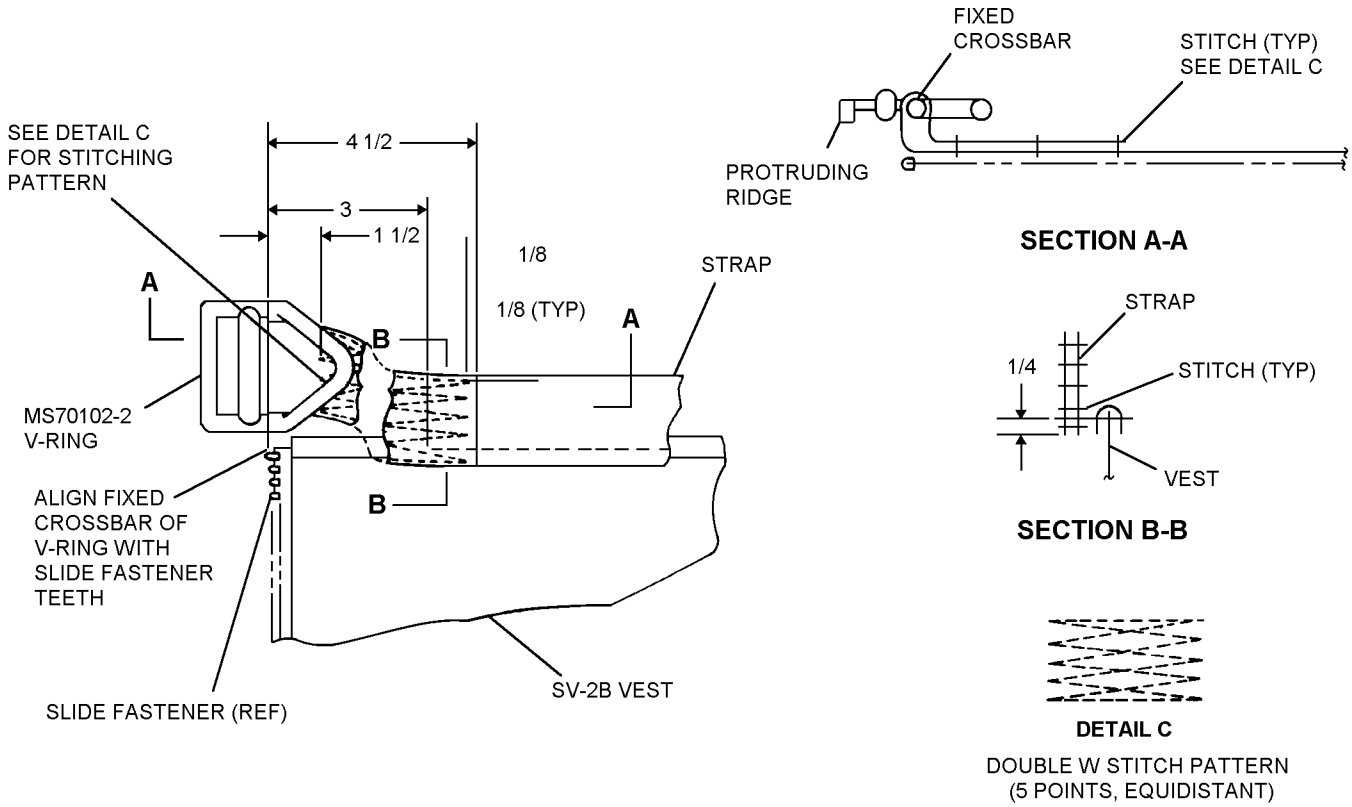

Figure 6-18. Helicopter Rescue Strap for SV-2 Series Survival Vest

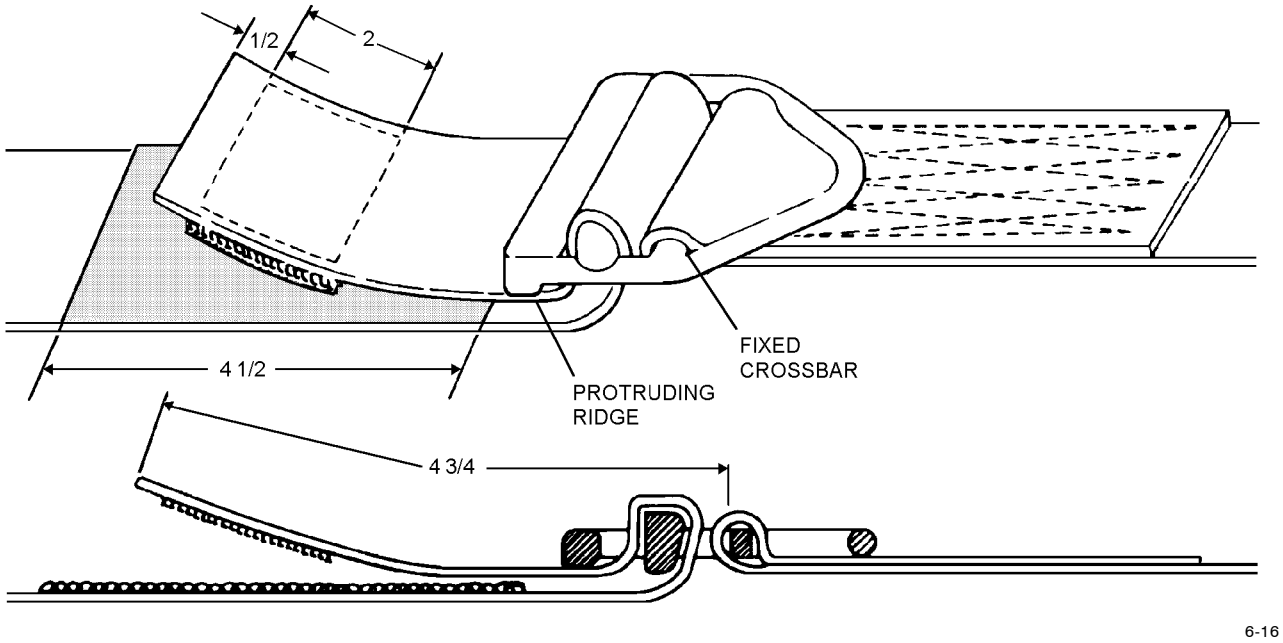

Figure 6-19. Reeving V-Ring

Materials Required (Cont)

Quantity	Description	Reference Number
1 Inch X 1 Inch	Fastener, Hook	A-A-55126 NIIN 00-405-2266
As Required	Thread, Nylon, Size E, Sage Green	V-T-295 NIIN 00-204-3884

1. Stitch the pile fastener tape on one end of the 4 1/2-inch, Type IV nylon tape and stitch the hook fastener tape 1/4 inch from the opposite end of the opposite side of the nylon tape.

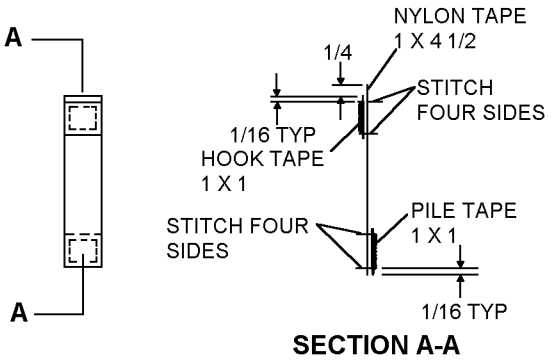

Step 1 - Para 6-41

2. Locate and stitch oxygen hose securing tab subassembly on left-hand main panel of survival vest below survival knife sheath and flare-gun/holster pocket. See Figure 6-20.

6-42. REMOVAL OF KNIFE SHEATH, FLARE GUN AND HOLSTER POCKET ASSEMBLY. Remove stitching securing the knife sheath, flare gun and holster pocket (P/N 67A100D3-1) to the left side vest panel (P/N 67A100D7-1). Salvage material which can be used in fabricating the SDU-5E Strobe Light Pocket, MK-13 (or MK-124) flare holders, or reinforcement for the 237C100 Oxygen Regulator Bracket. The remaining material shall be scrapped.

6-43. FABRICATION OF SRU-40/P HABD TETHER. The SRU-40/P HABD Tether is comprised of two assemblies, a snap hook assembly and a handle assembly. Each assembly is fabricated as follows:

Materials Required

Quantity	Description	Reference Number
1	Bead, Inflation Handle	975AS122-1
As Required	Thread, Nylon, Size E, SG Type 1 or Type 2	V-T-295 NIIN 00-204-3884
As Required	Fastener Tape, Pile, 1-Inch	MIL-F-21840 NIIN 00-106-5974
As Required	Fastener Tape, Hook, 1-Inch	MIL-S-21840 NIIN 00-106-5973
1	Snap Hook, 1-Inch Base	MIL-S-43770/1 NIIN 01-187-9402
As Required	Cord, Type 1A	MIL-C-5040 NIIN 00-292-9920
As Required	Webbing, 1-Inch, Nylon, Type II, Shade 33538	MIL-W-4088
As Required	Tape, Webbing, 1-Inch, (Alternate)	MIL-T-5038 NIIN 00-262-1643

NOTE

All stitching shall be 301 lock stitch, 6 to 9 stitches per inch, 1/8 inch from edge.

1. For snap hook assembly, measure 8-inch length of 1-inch webbing and sear cut ends.

a. Measure and mark 3 inches from either end of webbing.

b. Insert marked end of webbing through snap hook and fold over to 3-inch mark and sew using 3/4 x 3/4-inch cross boxstitch.

c. Cut 3 1/2-inch of 1-inch hook tape and fold in half with hook side out. Sandwich free-end of webbing between folded hook tape and sew together using 3/4 x 1 1/2-inch boxstitch.

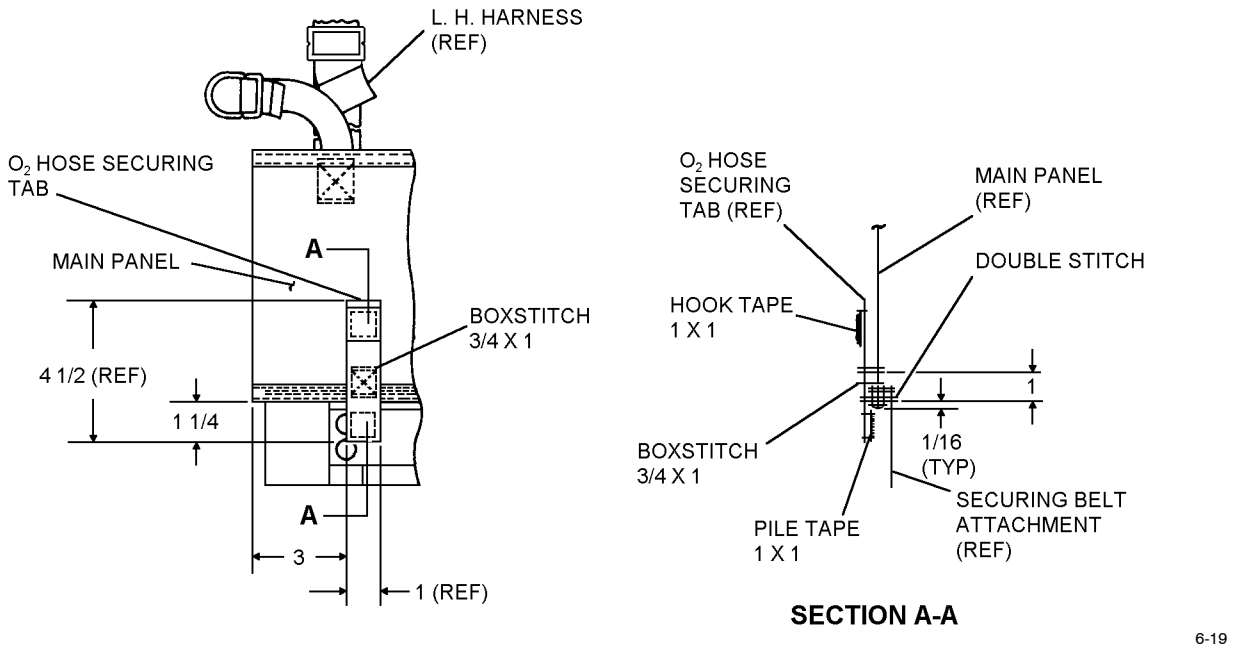

Figure 6-20. Installation of Oxygen Hose Securing Tab

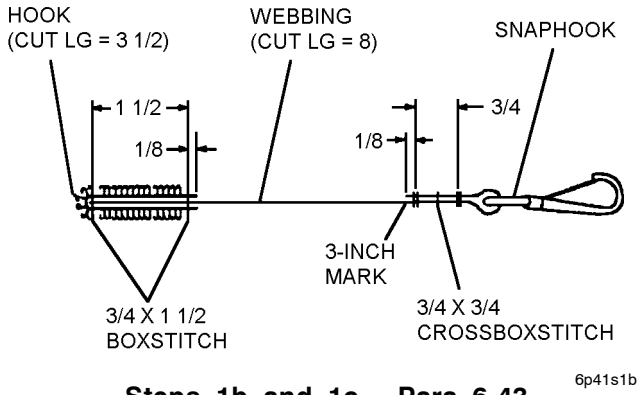

Steps 1b and 1c - Para 6-43

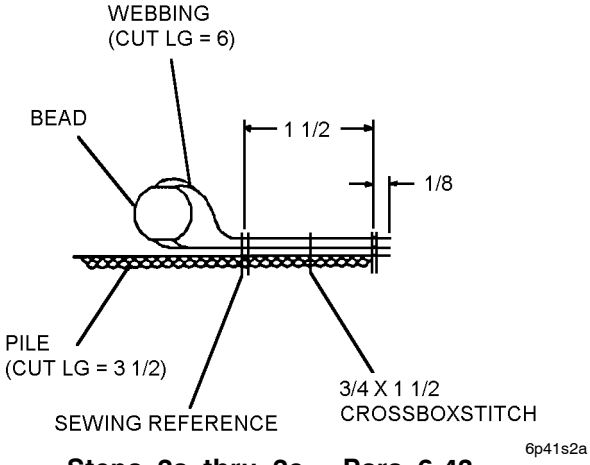

Steps 2a thru 2c - Para 6-43

2. For handle assembly, measure 6-inch length of 1-inch webbing and sear cut ends.

a. Thread end of webbing through inflation handle bead; center, fold in half, and align webbing ends.

b. Cut 3 1/2-inch length of pile tape. Measure and mark sewing reference line at mid point of pile tape.

c. Place pile tape on top of folded webbing with pile facing out. Align end of pile with ends of webbing and sew together using 3/4 x 1 1/2-inch cross boxstitch leaving opposite end of pile tape free and extending beyond handle bead.

3. To assemble snap hook assembly and handle assembly, align sewn end of pile tape on handle assembly with end of hook tape sewn to top of snap hook webbing. Mate pile tape with hook tape around end of snap hook assembly and along bottom of webbing.

4. Cut a 24-inch length of cord and thread end through webbing loop on which handle bead is installed and secure loose loop with bowline knot and lock with overhand knot. Total length of assembled tether from tip of snap hook to neck of SRU-40/P HABD should be 29 inches ±1 inch.

NOTE

The opposite end of the cord is secured to neck of SRU-40/P HABD bottle.

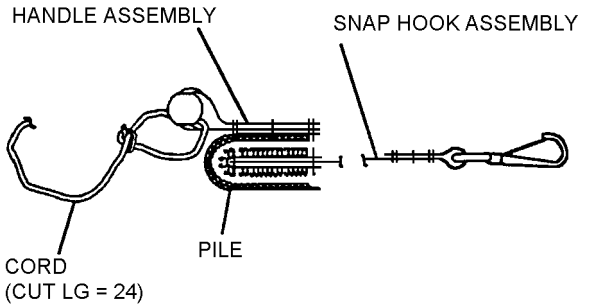

Steps 3 and 4 - Para 6-43

6-44. Modification for Installation of Joint Helmet Cueing System (JHMCS) Quick Disconnect (Q.D.) Fitting Access. (Figure 6-21)

NOTE

All stitching shall be in accordance with ASTM-D-6193, Type 301 lockstitch, using size E nylon thread, 7 to 10 stitches per inch with 1/2-inch minimum back or overstitching.

This modification is for aircrewmembers utilizing the LPU-36/P flotation collar who, after being properly fitted in accordance with paragraph 6-13, have access to the Q.D. blocked by the life preserver attachment belt on the SV-2B.

1. With the aircrewmember in a seated position and wearing the SV-2B over the JHMCS equipped torso harness, using a marking pencil, ink, or chalk, mark the portion of the 3-inch life preserver attachment belt webbing covering the quick disconnect fitting.

2. To remove the life preserver attachment band from the 3-inch life preserver attachment belt webbing, carefully cut stitching securing the attachment band to attachment belt, being careful not to nick or damage fabric. Discard the attachment band.

NOTE

No more than 2 1/2 inches in width of the three-inch wide webbing may be removed to accomplish this modification, however the rest of the 3-inch webbing may not be removed and the cut out may not exceed upwards past the 3-inch webbing. If the Q.D. is positioned above the 3-inch webbing, the aircrewmember must be fitted with the Type II Airsave Survival Vest.

3. If the cut out area overlaps the leg strap webbing, the leg strap 1-inch webbing with snap hook must be removed and re-sewn in the same manner as originally installed, 3/8 inch forward of the cut out area.

4. Sear cut the marked area of the 3-inch webbing to be removed.

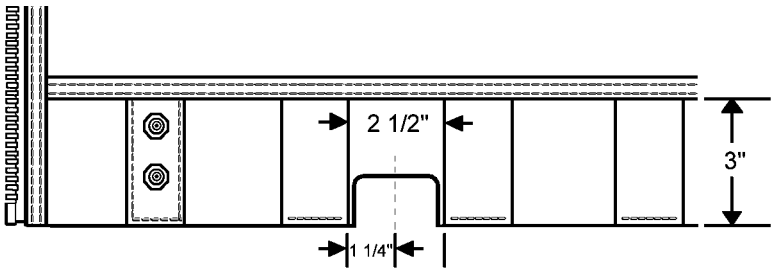

Figure 6-21. Installation of the JHMCS Q/D Bracket for Hard to Fit Aircrew

6-45. Modification of Slide Fastener Assembly. Authorized modification of the slide fastener assembly is limited to the following:

Materials Required

Quantity	Description	Reference Number
1	Bead, Handle	975AS122-1
As Required	Tape, Nylon, Type III, 3/4-Inch	MIL-T-5038 NIIN 00-176-8083
As Required	Thread, Nylon, Size E	V-T-295 NIIN 00-204-3884 or NIIN 00-244-0609
As Required	Fastener Tape, Pile, 1-Inch	MIL-T-21840 NIIN 00-106-5974
As Required	Fastener Tape, Hook, 1-Inch	MIL-T-21840 NIIN 00-106-5973

NOTE

All stitching shall be type 301, straight line, 8 to 12 stitches per inch.

1. Fabrication and installation of slide fastener thong:

a. Sear cut 4-inch length of 3/4-inch tape.

b. Route tape through opening in slider pull, fold double, and double stitch using size E nylon thread.

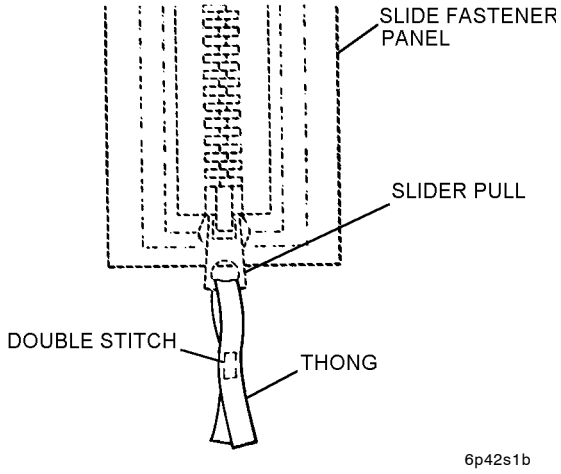

Step 1b - Para 6-45

2. Modification of left and right side pockets having medium heavy slide fastener chains opening from rear:

a. Remove the two stops from end of slide fastener chain.

b. Move slider assembly on lower outboard end of slide fastener chain upward to close pocket slide fastener chain.

NOTE

Carefully remove 1/2 inch of stitching as necessary to install new slider on webbing of slide fastener chain. Resew if necessary.

c. Install second slider assembly in end of slide fastener chain.

d. Install full stop on end of slide fastener.

e. Move slider to end stops to open pocket.

f. Lay vest on flat surface with pockets up and locate slide fastener chain of large side pocket for survival items. Starting from rear center of vest, trace horizontally along slide fastener chain toward pistol pocket stopping at point where slide fastener chain turns 90 degrees.

g. From stopping point, retrace back along slide fastener chain 3 inches. Position end of 4-inch length of pile tape at this point, pile side up, with length extending along pocket edge 1/8 inch from fabric edge (approximately 1/2 inch from slide fastener chain).

h. Stitch pile in place around all sides ensuring 1 1/2-inch overstitch.

i. Sear cut 8-inch length of 3/4-inch tape, route end through opening on end of slider poll, and fold in half with ends even. Sew together using 3/8 x 1 3/8-inch boxstitch 3/4-inch from folded end of at slider pull.

j. Thread tape through handle bead and move bead back close to slider.

k. Fold open end of tape twice to form 3/8-inch double fold and stitch in place. Move bead handle to rest against folded end of thong.

l. Lay vest out on flat surface with pockets facing out. Center both sliders on horizontal (top) length of slide fastener chain. The forward, or outboard slider is the one farther from the center of the vest (wearer's back) or nearest to the chest slide fastener (away from center of vest). Leave thongs facing in this direction to determine position of hook tape.

m. Position 3/4 x 3/4-inch piece of hook tape on each thong, with hook facing forward, 3/4 inch from fold at slider end; secure by stitching all sides.

n. Final position of forward (outboard) slider shall be no closer than 1/2 inch from 90 degree turn on horizontal chain with thong positioned toward center of vest and attached to pile tape.

o. The rear slider shall be positioned as close as possible to the forward slider and attached in the same manner.

6-46. FABRICATION AND INSTALLATION OF SDU-39/N DISTRESS STROBE LIGHT LANYARD. The following instructions for fabrication and installation of the SDU-39/N lanyard should be used for all applications of the SDU-39/N strobe light (Figure 6-22).

Materials Required

Quantity	Description	Reference Number
As Required	Webbing, Nylon, Yellow	MIL-T-5038, NIIN 00-190-0521
As Required	Thread, Size E, Yellow	V-T-295 NIIN 00-263-9931
	-or-	
As Required	Thread, Green, or OD, or Sage Green	NIIN 00-204-3884 NIIN 01-162-4444 NIIN 00-616-0079
As Required	Cord, Nylon, Type 1	NIIN 00-240-2154
	-or-	
As Required	Cord, Nylon, Type 1A	NIIN 00-292-9920
As Required	Cord, Nylon, Type 1A, Coreless	MIL-C-5040 NIIN 01-214-5128
As Required	Tape, Insulation Electrical, 0.250 or equivalent	MIL-I-15126 NIIN 00-401-9797

WARNING

All aircrew shall be educated on the operation of the locking switch clip to avoid confusion on the operation of the ON/OFF switch during a mishap.

1. Sear cut a 16 1/2-inch length of 1-inch nylon webbing.

2. Fold webbing in half aligning ends. Sew together 1/2 inch from folded end and all around length of webbing 1/8 inch from the edge.

3. Sew a 3/4 x 3 1/4 ±1/8 inch boxstitch, 1/8 inch from seared end.

4. Measure 4 3/8 inches from seared end and mark. Sew two rows of stitches across webbing at mark.

5. Beginning at stitchline located 1/2 inch from folded edge, sew a 3 ±1/4 inch boxstitch, 1/8 inch from edge of webbing. Inboard end of boxstitch will be 1/4 inch from two rows of stitching sewn in step 4.

6. Sear cut a 54 ±1-inch length of Type I (with core strands removed) or 1A coreless nylon.

7. From one end of the nylon cord measure and make a mark at the 3-inch measurement and the 6-inch measurement.

8. At the 3-inch measurement make an overhand knot.

9. At the 6-inch measurement attach cord to top of switch clip using a lark's head loop.

10. Cut a 1-inch piece of tape. Pull larks head loop snug and wrap tape around the running ends of nylon cord. Tape should be wrapped snug and close to the larks head loop to prevent the loop from coming loose.

11. Insert short end of nylon cord through webbing fold of fabricated strobe light lanyard. Center the lanyard between the overhand knot at the 3-inch measurement and the wrapped electrical tape.

12. Route short end of nylon cord, right to left, through lanyard hole located at the bottom of the ON/OFF switch track. If needed, use a piece of wire or equivalent as a bodkin tool to assist in routing the nylon cord through the lanyard holes.

NOTE

Switch clip shall be positioned over the ON/OFF switch so the sides of the clip slide over the switch track when set in place.

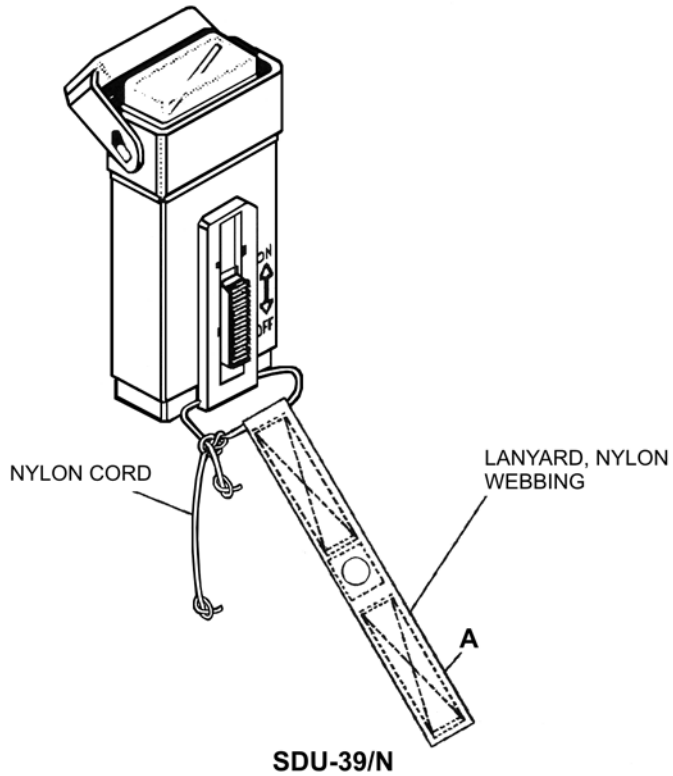

SDU-39/N

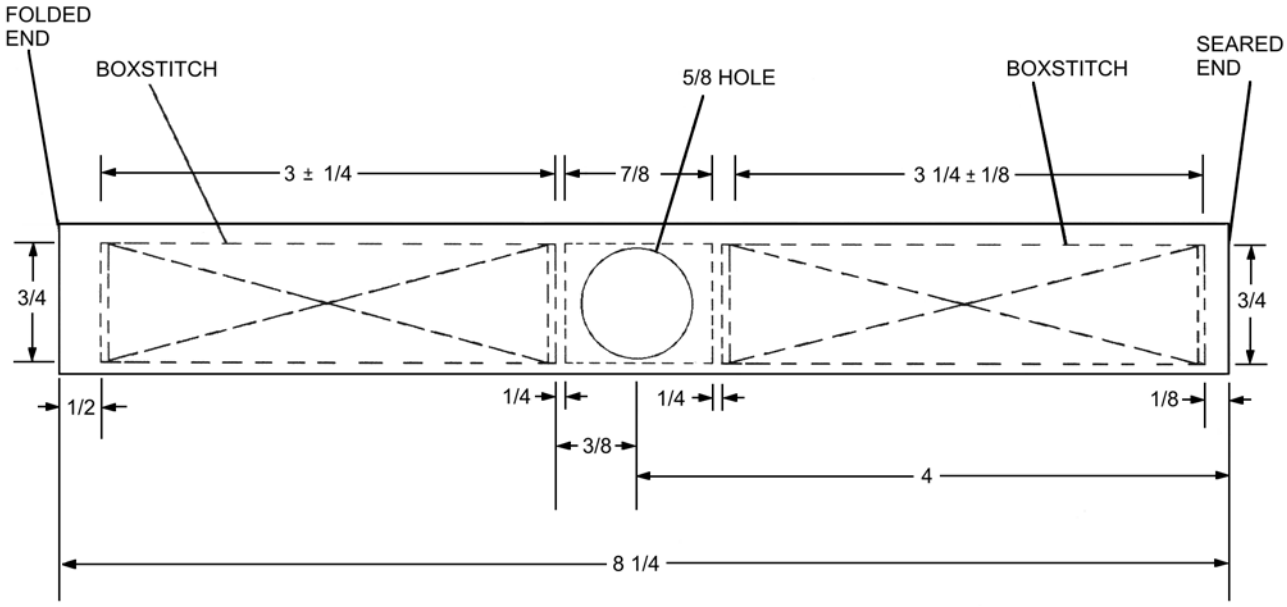

DETAIL A

Figure 6-22. Fabrication of SDU-39/N Distress Strobe Light Lanyard

13. Place right side of the switch clip into the right lanyard hole, pull nylon cord until the 3-inch overhand knot is snug against the switch track. This will hold the right side clip end in place.

14. Place the left side of the clip into the left hole of the switch track.

15. Tie an overhand knot snug against the left hole of the switch track.

16. Place clip over ON/OFF switch so the sides of the clip slide over the switch track. If clip is loose, gently squeeze clip sides together to get a tighter fit.

17. Using an etching tool, etch the new superseding P/N to either of the narrow sides of the outer casing.

18. Secure long end of cord to loop inside the stowage pocket and secure using a bowline knot.

19. Stow the SDU-39 distress marker light in the pocket with the IR lens cap snapped securely in place, dome facing down. ON/OFF switch in the OFF position and facing inboard toward the wearer. Fake excess nylon cord together, secure with light rubber band and stow in pocket with light.

20. Allow lanyard to extend from pocket. Place 5/8-inch seared hole in center of lanyard over appropriate snap fastener and close pocket.

6-47. MODIFICATION OF SV-2B SURVIVAL VEST TO ACCOMMODATE LARGE FRAME PISTOL. The SV-2B Survival Vest shall be modified to accommodate a large frame pistol in accordance with ACC 513. Modification shall be performed at intermediate maintenance as follows:

Materials Required

Quantity	Description	Reference Number
As Required	Webbing, Typ 4, 1-Inch	NIIN 00-261-8579
As Required	Thread, Size E, Type 1, Class A	V-T-295 NIIN 00-204-3884
2	Socket, Snap Fastener	MS27976-18 NIIN 00-281-4356
2	Clinch Plate	MS27976-38 NIIN 00-276-4283

1. Cut two lengths of 1-inch webbing; 11 1/2 inches and 8 inches.

2. Fold and sew one end of each webbing length, looped and doubled in the same manner as the original trigger and hammer webbing on the holster pocket.

NOTE

Flattened loop and doubled sections of webbing should be approximately 1 1/2 inches long, including stitching.

3. Install socket and clinch plate on doubled sections of webbing at midpoint between stitching.

4. Cut existing trigger and hammer webbing from holster pocket leaving one inch of webbing (measured on shortest side) still attached to the holster pocket.

5. Attach new webbing to remaining one inch sections of original webbing using 3/4-inch cross box-stitch (F-thread).

NOTE

The end of the new webbing shall extend (overlap) to within 1/8 inch of base of original webbing.

6. Remove angled section of stitching that extends into lower section of the holster pocket. Do not disturb stitching on holster pocket trim.

7. Measure one inch up from bottom of holster pocket (on shorter side of pocket), cut and sear fabric immediately inboard of holster trim. Lanyard should remain undisturbed and still attached to holster pocket trim.

8. Document in accordance with COMNAVAIRFORINST 4790.2.

6-48. FABRICATION OF THE OXYGEN MASK STOWAGE RETAINING SNAP.

Materials Required

Quantity	Description	Reference Number
1	Stud, Snap Fastener	AN227-8B NIIN 00-276-4934
1	Post, Snap Fastener	AN227-9B NIIN 00-276-4978
As Required	Webbing, Textile, Type IV, 1 1/2-Inch	MIL-T-5038 NIIN 00-263-2472 or Equivalent
As Required	Thread, Nylon, Size E	V-T-295 NIIN 00-204-3884 or Equivalent

1. Sear cut a 1 1/2-inch length of webbing. (Ensure no sharp edges exist after sear cutting webbing.)

2. Attach the webbing below the adjustment buckle on the left shoulder strap of the SV-2B using ASTM-D-6193, Type 301 lockstitch, 7 to 10 stitches per inch with a minimum backstitch of 1 inch. Stitching shall be approximately 1/8 inch from all edges of the snap fastener webbing. Exact position should be determined by the aircrewmember.

3. Punch a hole through the 1 1/2-inch piece of webbing, at the center and the shoulder strap. Install the post and stud snap fastener.

6-49. INSTALLATION OF RADIO POCKET TO ACCOMMODATE AN/PRC-112B, AN/PRC-149, AN/PRQ-7, AN/PRC 90/90-2 WITH EXTENDED BATTERY TOWER AND ALL OTHER LARGE FRAME SURVIVAL RADIOS.

Materials Required

Quantity	Description	Reference Number
1	Pocket, Stowage	829AS146-1 NIIN 01-275-8735
As Required	Thread, Nylon Size E	V-T-295 NIIN 00-204-3884
As Required	Webbing, Nylon Type VIII	MIL-W-4088 NIIN 00-261-8585

1. Remove existing radio pocket and flashlight retainer straps from the SV-2B Survival Vest. Older vests may have flashlight retainer straps attached directly to the radio pocket.

2. Position Radio Pocket, 829AS146-1 with its bottom flush against the top of the LPU securing assembly strap. Looking at the front of the pocket, mark proper position of pocket onto SV-2B Survival Vest by aligning the side of the pocket with the slider 1/4 inch in from the seam formed by the installation of the main entrance slide fastener to the vest. The other side of the pocket will be attached to the vest against the slide fastener webbing on the survival items pocket.

NOTE

When attaching the pocket to the vest, all stitching shall be size E thread, 8 to 10 stitches per inch with a minimum of 1-inch backstitch.

3. As per the alignment marks, begin stitching at upper left edge of pocket, continue down to bottom of pocket, across the bottom to the right edge and up the right edge to the top of the vest. The top of the pocket shall be sewn directly to the top edge binding tape of the SV-2B while the other three sides shall be stitched through the radio pocket's edge binding tape, 1/8 inch from outside edge, with a second row of stitches, 1/8 inch in from the first.

4. Reinforce the radio pocket to the vest by stitching a 4 inch length of Type VIII Nylon Webbing, 2 1/2 inches from the top of the inside of the radio pocket using a double cross box stitch.

5. Reattach flashlight retainer straps in the same position prior to removal by stitching to the radio pocket edge binding tape with three rows of E thread stitching, 6 to 8 stitches per inch. If old straps are deemed unserviceable, fabricate new straps using old straps for reference.

NOTE

When finished, new pocket may reach 1 to 1 1/2 inches above the top of the SV-2B.

6. Inspect final attachment of radio pocket to SV-2B.

7. Document maintenance in accordance with OPNAVINST 4790 Series.

Section 6-2. CMU-21/P22P-7(V) Survival Vest

6-50. GENERAL.

6-51. The CMU-21/P22P-7(V) Survival Vest is an SV-2B Survival Vest modified to allow expansion of its circumference so it can be worn over bulky clothing such as A/P22P-7(V) anti-exposure apparel (Chapter 5) and body armor. See NAVAIR 13-1-6.7-1 for aircraft application tables.

6-52. CONFIGURATION.

6-53. The CMU-21/P22P-7(V) is manufactured at organizational level maintenance by modifying the SV-2B Survival Vest in accordance with ACC 522, Amend 2. All features and materials of the SV-2B have been retained. An extension panel has been added to front structure of the vest to permit increase in size to provide greater comfort and mobility when worn over bulky clothing and body armor. When not in use the panel is stowed on the inner wall of the vest. Amendment to ACC 522 further modifies the SV-2B Survival Vest to include lengthening the helicopter rescue (lift) strap to be compatible with addition of extension panel. See paragraph 6-61.

6-54. APPLICATION.

6-55. The CMU-21/P22P-7(V) Survival Vest is designed for use of aircrewmembers of P-3 all series, C-130 all series, and rotary winged aircraft.

6-56. MODIFICATIONS.

6-57. The CMU-21/P22P-7(V) Survival Vest shall be updated by comparing its configuration with directives listed in Table 6-2 and Table 6-4. Repairs, fabrica-tions, and installation, required to maintain serviceability are listed in Table 6-5.

6-58. MAINTENANCE.

6-59. INSTALLATION OF EXTENSION PANEL. Installation of extension panel is as follows:

Materials Required

Quantity	Description	Reference Number
1	Kit, Survival Vest, SV-2B Extension Panel	9522LKA125624LX
As Required	Thread, Nylon, Size E	V-T-295 NIIN 00-204-3884

Materials Required (Cont.)

Quantity	Description	Reference Number
As Required	Ink, Black, Waterproof	TT-I-542 NIIN 00-161-4229
As Required	Cloth, Nylon, Duck	MIL-C-7219 NIIN 01-173-4436
As Required	Fastener Tape, Hook	MIL-F-21840 NIIN 00-405-2265
As Required	Fastener Tape, Pile	MIL-F-21840 NIIN 00-404-2265
1	Slide Fastener, Type IV, Style 8, Size MH, cut to required length, Short Pull Tab	A-A-55634 NIIN 00-164-9984

NOTE

All stitching shall be 8 to 10 stitches per inch with one inch back stitching.

Prior to kit installation check to ensure slide fastener provided with kit mates with entrance slide fastener on vest. If there is no match, remove slide fastener from vest and replace with fastener provided in kit.

1. Position and sew extension panel from kit to inside of vest aligned along back edge of attaching fabric of vests slide fastener (figures 6-23 and 6-24).

NOTE

Ensure installed extension panel does not interfere with operation of vest's normal entrance slide fastener when panel is in stowed position.

2. Place panel in stowed position and mark place on vest where panel's hook tapes meet vest.

3. Sew pile tapes in positions marked in step 2.

NOTE

Holster pocket must be open when installing upper pile tape.

4. Place extension panel in stowed position by folding it back so hook and pile tapes mate.

Table 6-4. CMU-21/P22P-7(V) Directives

Description of Modification	Application	Modification Code
Installation of Extension Panel (Note 1)	All SV-2B Survival Vests worn by aircrewmembers of patrol aircraft	66-522
SV-2B Survival Vest, Installation of Extension Panel at Organizational Level	All SV-2B Survival Vests worn by aircrewmembers of patrol aircraft	66-522 Amend 1
SV-2B Survival Vest, Modification of Extension Panel Addition of P-3 and Rotary Wing Aircrew With Body Armor	All SV-2B Survival Vests worn by aircrewmembers of all P-3 series and Rotary Winged Aircraft	66-522 Amend 2
Notes: 1. See NAVAIR 13-1-6.7-1 for aircraft applications and authorized configurations of the vest and body armor.		

Table 6-5. Repairs/Fabrications/Installations

Description	Application	Paragraph
Attachment of heat shrink tubing to LPU-27 and LPU-35 Life Preservers during CMU-21/P22P-7(V) attachment.	All CMU-21/P22P-7(V)	6-16
Procurement and fitting of PRU-60/P22P-15 or PRU 60A/P22P-15 Soft Body Armor.	All SV-2B (CMU-21/P22P-7(V)) Survival Vests	6-26
Procurement and fitting of the leather shoulder holster.	All SV-2B (CMU-21/P22P-7(V)) Survival Vests	6-27
Installation of radio pocket to accommodate AN/PRC-112B, AN/PRC-149, and AN/PRQ-7 survival radios.	All SV-2B (CMU-21/P22P-7(V))	6-49
Installation of extension panel. (Note 1)	SV-2B Survival Vests worn by patrol aircraft aircrewmembers	6-59
Fabrication of extension panel for SV-2B (CMU-21/P22P-7(V)) Survival Vest.	All SV-2B (CMU-21/P22P-7(V)) vests	6-60
Fabrication and replacement of helicopter rescue (lift) strap.	SV-2B Survival Vests worn by aircrewmembers of P-3 all series, C-130 all series, and rotary winged aircraft	6-61
Fabrication of the hands free hydration system/optional equipment pocket for SV-2B/CMU-21/P22P-7(V).	All SV-2B (CMU-21/P22P-7(V)) Survival Vests	6-62
Notes: 1. See NAVAIR 13-1-6.7-1 for aircraft applications and authorized configurations of the vest and body armor.		

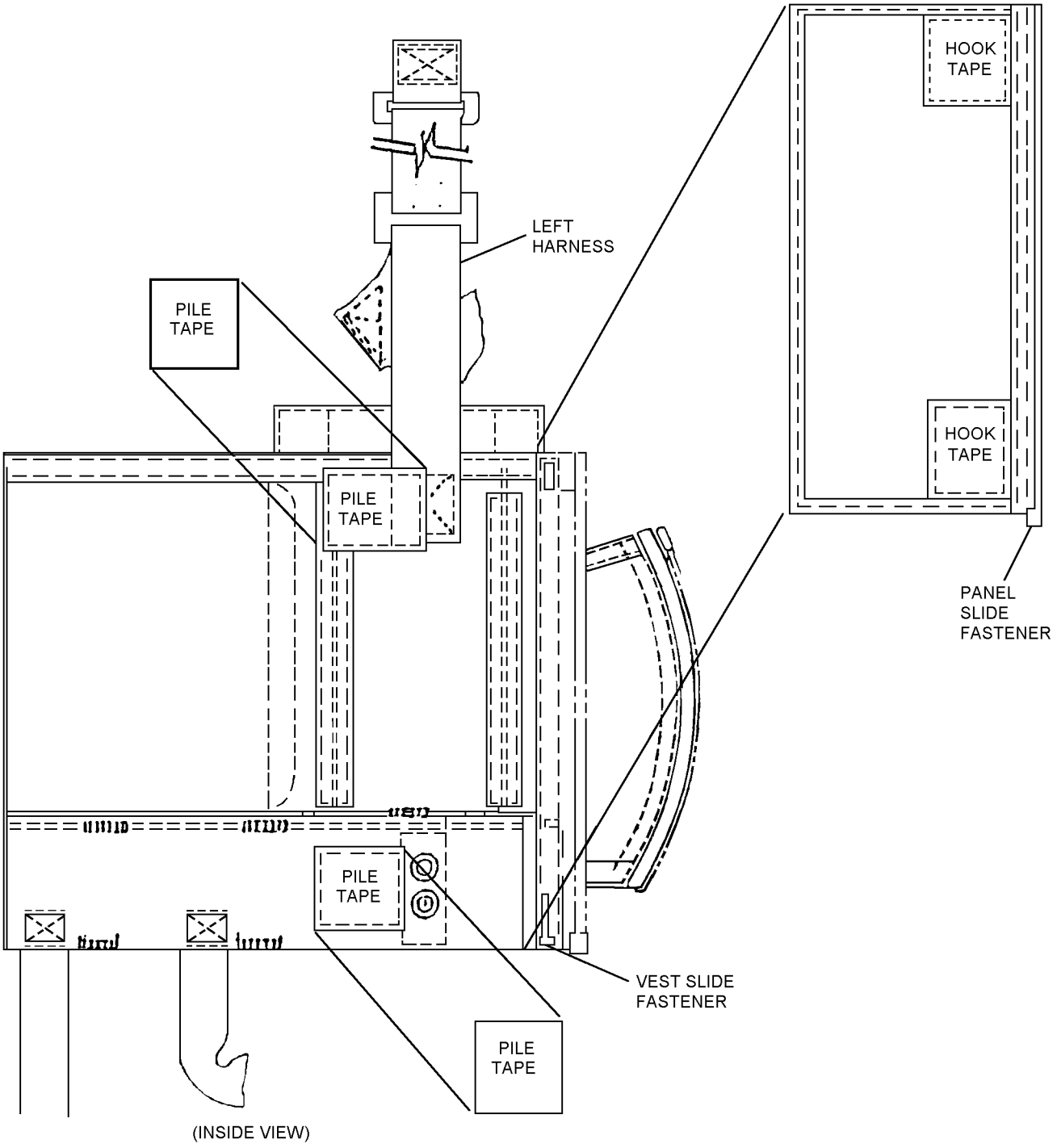

6-26

Figure 6-23. SV-2B Before ACC 522

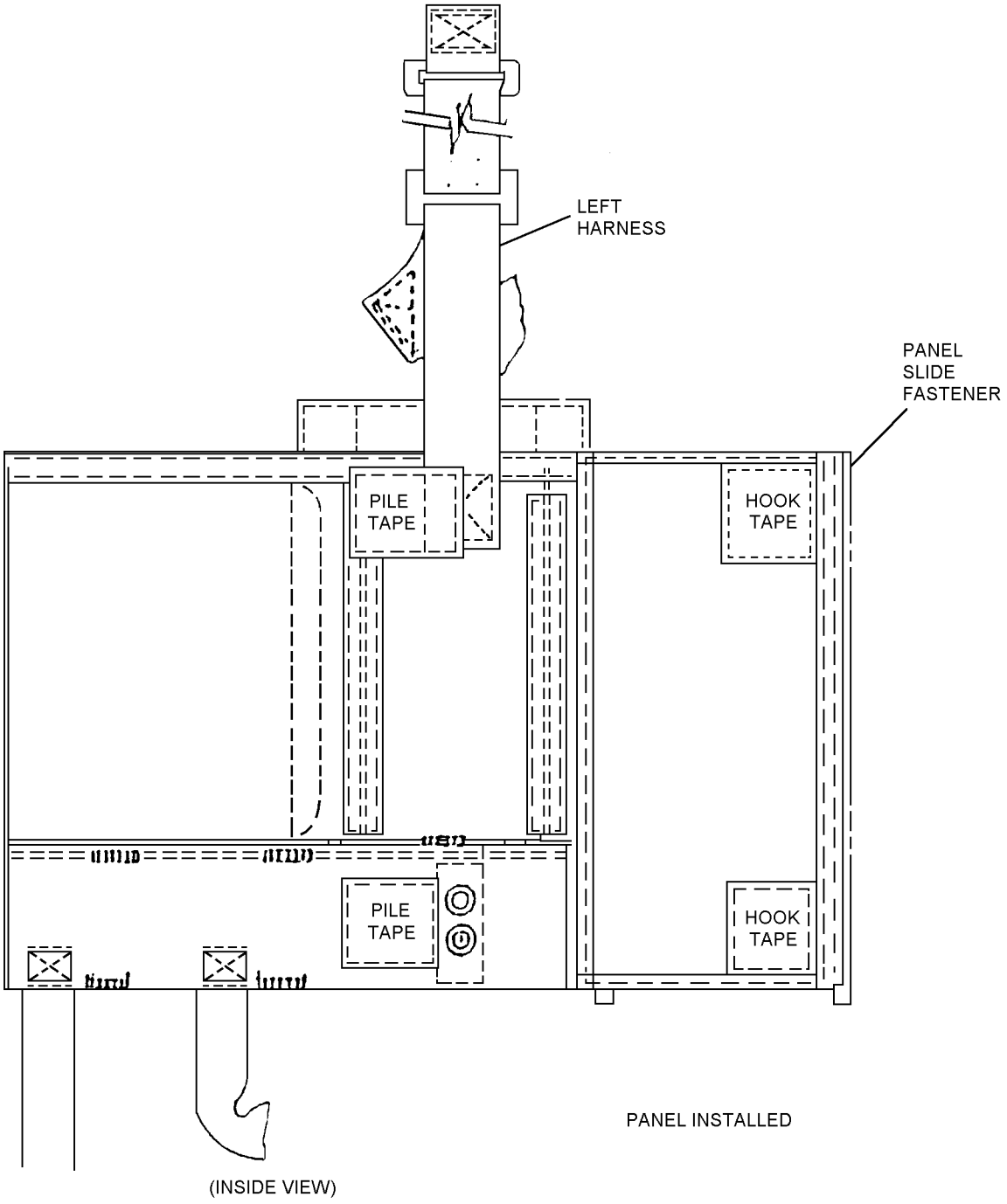

6-27

Figure 6-24. SV-2B After ACC 522

5. Using black marking ink, blackout SV-2B identification and stencil new identification, CMU-21/P22P-7(V), directly below blacked-out area.

6-60. FABRICATION OF EXTENSION PANEL FOR SV-2B SURVIVAL VEST, CMU-21/P22P-7(V). To fabricate extension panel, proceed as follows:

NOTE

Extension panels supplied in kits from ACC 552 measure 10 1/2 inches installed length and width. Panels may be modified (lengthwise) to obtain best fit for aircrewmember. For ALSS pool use, modifying SV-2B/LPU-27/LPU-35 assemblies with extension panels in several different sizes (lengths) to accommodate aircrewmembers' needs is authorized. When issued together, the SV-2B and LPU-27/LPU-35 extension panel should be of matching lengths.

Materials Required

Quantity	Description	Reference Number
As Required	Thread, Nylon, Size E, Type II, Class A, Sage Green	V-T-295 NIIN 00-204-3884 or equivalent
As Required	Duck Cloth, Nylon, Type III, Class 3	MIL-C-7219 NIIN 01-173-4436
As Required	Ink, Waterproof, Black	NIIN 00-161-4229
As Required	Tape, Hook, Fastener, Black or Green, USAF 1565, Type I, Class 1	MIL-F-21840 NIIN 00-405-2267 or equivalent
As Required	Tape, Pile Fastener, Black or Green, USAF 1565, Type I, Class 1	MIL-F-21840 NIIN 00-405-2265 or equivalent
1	Slide Fastener, 11-Inch, Type IV, STY 8, Size MH, Separating Short Pull Tab	A-A-55634 NIIN 01-164-9539

NOTE

All stitching shall be Type 301 lockstitch, using Size E nylon thread, 8 to 10 stitches per inch, back or over-stitch one inch.

1. Cut 13 x 13-inch panel of nylon duck cloth.

a. Measure and mark a line 1 1/2 inches from all four edges.

b. Make two 1/2-inch folds to the 1 1/2-inch line.

c. Sew one row of stitches 3/8 inch from the outside edge of the fold around the perimeter.

2. The finished dimensions of the panel shall be 11 x 11 inches.

3. Cut slide fastener to desired length.

NOTE

Check for compatibility of SV-2B slide fastener and slide fastener obtained from supply or salvaged for this modification.

Compatibility may require procurement of a second slide fastener.

4. Using the retainer pin side of separating slide fastener (side without the slider pull tab), sew slide fastener tape to one edge of the panel. Starting at the bottom of the retainer pin side of the slide fastener chain, sew up to the top of slide fastener chain with the top edge of the slide fastener tape turned under approximately 1 inch.

5. Cut two 2-inch square pieces of hook fastener tape. Sew one piece in the upper right hand corner of the panel and the other piece in the lower right hand corner (Figure 6-23).

6. Position and sew fabricated extension panel to inside of vest aligned along back edge of attaching fabric of vests slide fastener (Figure 6-24).

7. Refer to paragraph 6-59 Installation of Extension Panel, steps 1 through 5, for installation of new panel.

6-61. Fabrication and Replacement of Helicopter Rescue (Lift) Strap. The addition of the extension panel to the SV-2B Survival Vest requires replacement of the helicopter lift strap with one compatible with the increased circumference of the vest. Fabricate replacement strap as follows:

Materials Required

Quantity	Description	Reference Number
1	Ring, Parachute Harness, V-Type	MS70102-2 NIIN 00-113-7171
As Required	Webbing, Nylon, Type XXVII	MIL-W-4088 NIIN 00-530-1489
As Required	Thread, Nylon, Size E	V-T-295 NIIN 00-204-3884
As Required	Fastener Tape, Hook Class 2, 2-Inch Width	MIL-F-21482 NIIN 00-926-4931
As Required	Fastener Tape, Pile Class 2, 2-Inch Width	MIL-F-21482 NIIN 00-926-4930

1. Remove existing helicopter rescue (lift) strap from vest. Remove and retain hardware for reuse.

NOTE

Rescue straps must have at least four inches of unused strap remaining when vest is donned with strap engaged and drawn tight.

2. Measure and searcut length of nylon webbing equal to length of strap removed, plus additional length required to accommodate installed extension panel.

3. Attach hardware to webbing in accordance with paragraph 6-40.

4. Attach webbing to vest in accordance with paragraph 6-40.

NOTE

Stitching in following procedures shall be machine stitching using size E nylon thread, 8 to 10 stitches per inch. Back stitch exposed ends 1 inch.

5. Stitch 4 1/2-inch length of pile tape to webbing 2 1/2 inches plus 1/2 inch back from radio pocket.

6. Stitch 2-inch length of hook tape to underside of upper webbing. Start 1/2 inch from seared end of webbing.

7. Stitch 1-inch x 2-inch pile tape to webbing lengthwise so pile and hook tape mate when extension panel is used and so pile does not interfere with hardware when extension panel is not used.

8. Trim off selvage edge of fastener tapes after sewing to webbing.

6-62. FABRICATION OF THE HANDS FREE HYDRATION SYSTEM/OPTIONAL EQUIPMENT POCKET FOR SV-2B SURVIVAL VEST, CMU-21/P22P-7(V). (Figure 6-25)

Materials Required

Quantity	Description	Reference Number
As Required	Cloth, Nylon Duck, Type III, CL3	MIL-C-7219 NIIN 01-173-4436
1	Grommet, Metallic	MS-20230B5 NIIN 00-231-6592
12 Inches	Webbing, Nylon, Type IX	MIL-W-4088 NIIN 00-261-8846
As Required	Slide Fastener	A-A-55634 NIIN 00-252-5419
	-or-	
As Required	Slide Fastener	A-A-55634 NIIN 00-255-1172
As Required	Top Stop	A-A-55634 NIIN 00-276-4939
As Required	Fastener Tape, Pile, 1-Inch	MIL-F-21840 NIIN 00-106-5974
As Required	Fastener Tape, Hook, 1-Inch	MIL-F-21840 NIIN 00-106-5973
As Required	Thread, Nylon, Size E	V-T-295 NIIN 00-204-3884

NOTE

All stitching shall be in accordance with ASTM-D-6193, Type 301 lockstitch, 6 to 8 stitches per inch. Backstitch or overstitch a minimum of 1/2 inch. All nylon fabric and nylon webbing shall be sear cut.

1. Fabrication of pocket:

a. Cut one piece of nylon duck measuring 6 x 30 inches and one piece measuring 7 x 31 inches. The smaller piece will be piece “A” and the larger piece will be piece “B”. Center “A” on top of “B” ensuring extra 1/2 inch of material from “B” protrudes evenly beneath all sides of “A”. Single fold protruding 1/2 inch of “B” up and over edges of “A” and secure with one row of stitching.

b. Sew hook fastener tape across the 6-inch top edge of piece “A”. This will be considered the top panel.

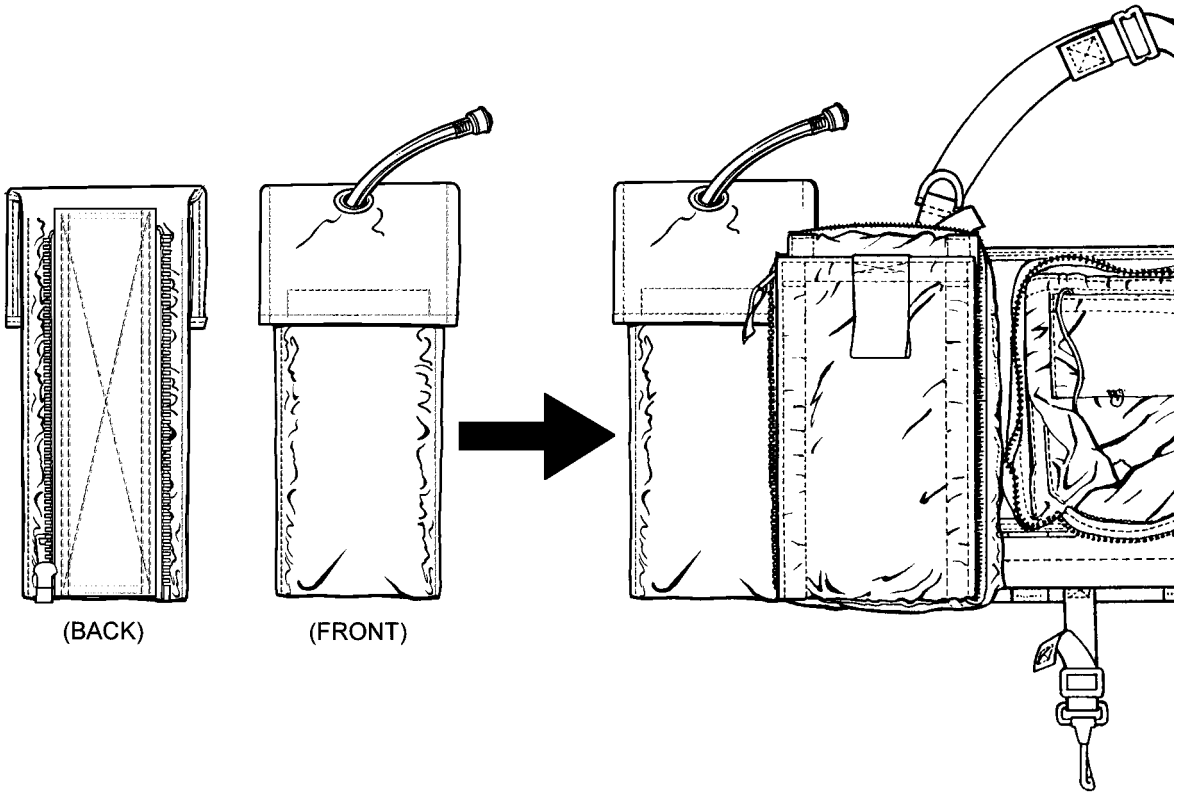

6-25a

Figure 6-25. Hydration/Optional Equipment Pocket

c. Turn panel over. Piece "B" should be facing up. Measure 2 inches up from opposite end with hook fastener tape and sew pile fastener tape onto piece "B".

d. Measure 4 inches down from top of panel and punch a 5/8-inch hole centered at the 4-inch line.

e. Install a no. 5 grommet in the hole made in step d.

2. Fabrication of slide fastener:

NOTE

Not all slide fasteners are the same. Ensure that the slider assembly engages the existing slider assembly on the vest.

a. Check new slide fastener or slide fastener salvaged from old SV-2B for compatibility with entrance slide fastener on SV-2B. If the SV-2B entrance slide fastener is not compatible with the new or salvaged slide fastener, a different slide fastener that is compatible with the entrance slide fastener on the SV-2B will have to be used.

b. With SV-2B entrance slide fastener closed, measure length of slide fastener from bottom to top stops.

c. Close and lay out slide fastener to be installed on pocket.

d. Mark overall length to the same measurement as the entrance slide fastener on the SV-2B, add an additional inch and mark. Cut off excess chain and discard.

e. Remove the existing teeth from the cut edge and down 1 inch.

f. Install new top stops and ensure finished zipper is same overall length as the SV-2B entrance slide fastener.

3. Fabrication of SV-2B Mounting Panel:

a. Lay out 12-inch piece of nylon webbing. Fabricator shall determine right and left-hand side as follows:

b. Lay slide fastener chain on right and left hand sides of 12-inch nylon webbing, ensuring side with slider assembly is on the left-hand side of the webbing, with the lock block even with cut edge of webbing.

c. Secure slide fastener to webbing with two rows of stitching.

d. In the same manner, attach other side of slide fastener assembly to opposite side of 12-inch piece of nylon webbing.

e. Fit check the mounting panel to the entrance slide fastener to ensure proper slide fastener operation.

f. After fit check, remove from the SV-2B.

4. Attachment of pocket to SV-2B Survival Vest Mounting Panel:

a. Lay panel on sewing machine lengthwise with piece "B" facing up and no. 5 grommet facing away from the fabricator. Centered lengthwise, lay the 12-inch piece of nylon webbing with slider assembly to the left, with the slider assembly pull tab toward the nylon fabric (the panel could be installed upside down if the pull slider is on the wrong side) and installed 6 inches down from the end of the panel closest to the grommet. Secure the nylon webbing to the nylon panel with cross boxstitch, ensuring the outer row of stitches are sewn 1/8-inch from the outside edge of the webbing.

5. Final assembly of pocket:

a. Fold 6 x 30 inches panel to form a pouch assembly. Fold shall be formed by folding the end with the pile tape up to the top edge of the 12-inch nylon webbing mounting panel (with pile tape toward the slide fastener panel), piece "A" on the outside, with piece "B" on the inside. Secure both right and left sides with a single row of stitching.

b. Turn pouch assembly inside out. Piece "B" will now be facing outward. Press pouch flat and flat stitch 1/8 inch from outside edge, along right and left side of pouch.

c. Install water bladder assembly. Drinking hose will exit the pouch through the no. 5 grommet. The portion of the hose that extends out of the pouch will be secured by tucking it under the water pouch retention flap. This modification allows for a maximum 50 oz. hydration system or for optional survival items.

6. Modification of SV-2B Survival Vest to accommodate pocket:

a. The pocket attaches to the SV-2B Survival Vest by being zipped in front of the assembly using the SV-2B's entrance slide fastener. This may alter the fit of the SV-2B assembly due to the 4-inch width of the mounting panel. In order to properly re-fit the aircrewmember's vest, refer to procedures found in this manual.

WARNING

The primary use for this pocket is intended for up to a 50 oz. hydration system, however, it may be utilized for storage of any portion of the allowed 5 lbs. of optional survival equipment, at the aircrewmember's discretion. Prior to flight, the aircrewmember must check to see that the modification does not impede flight controls or affect the proper fit of the vest. If so, do not use the pocket and incorporate optional items elsewhere on the vest.

b. Document maintenance in accordance with OPNAVINST 4790 Series.

Section 6-3. CMU-23A/P Survival Vest, P/N 1774AS300-1

6-63. GENERAL.

6-64. The CMU-23A/P Survival Vest is an SV-2B Survival Vest or CMU-23/P Survival Vest which has been modified in accordance with ACC 616 (as amended) for compatibility with the man-mounted pusher fan of the A/P23P-14A(V) CBR Protective Assembly (Upgrade) and the A/P22P-14(V)1 Respirator Assembly. Survival vests modified by ACC 616, and redesignated CMU-23A/P are dual purpose vests. For routine missions where there is no potential for CBR exposure, the vest can be configured like a non-CBR configuration SV-2B Survival Vest (Figure 6-26). With its interchangeable pocket configuration, however, the CMU-23A/P vest can be quickly reconfigured for missions requiring CBR protection.

6-65. CONFIGURATION.

6-66. When the CMU-23A/P vest is in the CBR configuration (Figure 6-27), SRU-40/P/Helicopter Aircrew Breathing Device (HABD), Survival Knife, and MK-79 Illumination Signal Kit are stowed in individual pockets which are then attached to the front of the vest by means of directional snap fasteners, and hook and pile tape. The pusher fan and battery pack, enclosed in their pocket assembly, are secured to the vest by a receiving bracket which provides easy donning and doffing of the respirator assembly.

6-67. The CMU-23A/P Survival Vest, P/N 1774AS201-1, used by aircrews of USN/USMC helicopter, E-2C, and C-2A aircraft shall be modified by ACC 639 to accommodate the SRU-40/P/HABD. After modification the modified CMU-23A/P Survival Vest shall be reidentified as CMU-23A/P, P/N 1774AS300-101.

6-68. APPLICATION.

6-69. The CMU-23A/P Survival Vest is intended for use by USMC helicopter aircrews operating CH-46D/E, CH-53D/E, MH-53E, and UH-1N helicopters who are equipped with the A/P23P-14A(V) Respirator Assembly and all other USN/USMC rotary wing aircrews who are equipped with the A/P22P-14(V)1 Respirator Assembly.

6-70. MODIFICATIONS.

6-71. The CMU-23A/P Survival Vest shall be updated by comparing the configuration of the assembly with the directives listed in Table 6-6. Refer to Section 6-1 maintenance procedures required to maintain serviceability.

6-72. MAINTENANCE.

6-73. Refer to paragraph 6-22 for inspection, cleaning, repair and, maintenance requirements applicable to the CMU-23A/P Survival Vest.

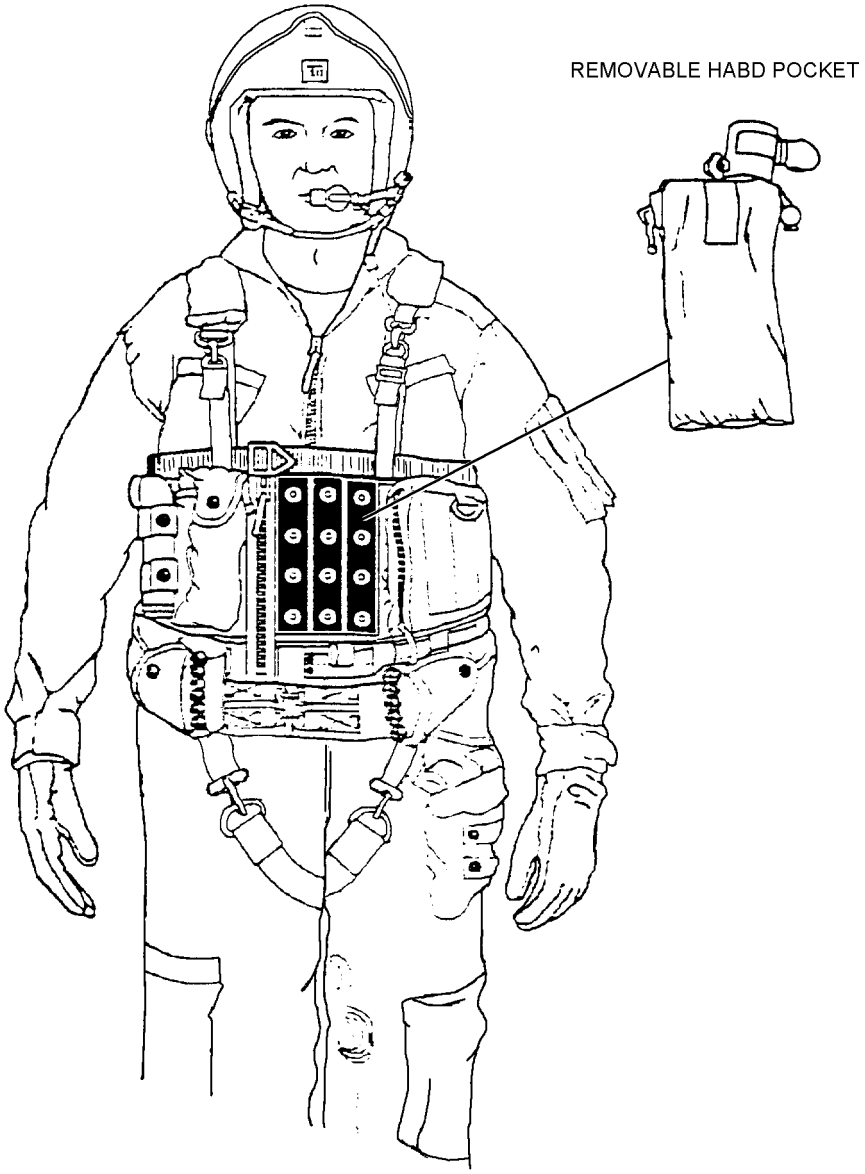

6-28

Figure 6-26. CMU-23A/P Survival Vest (Normal Configuration)

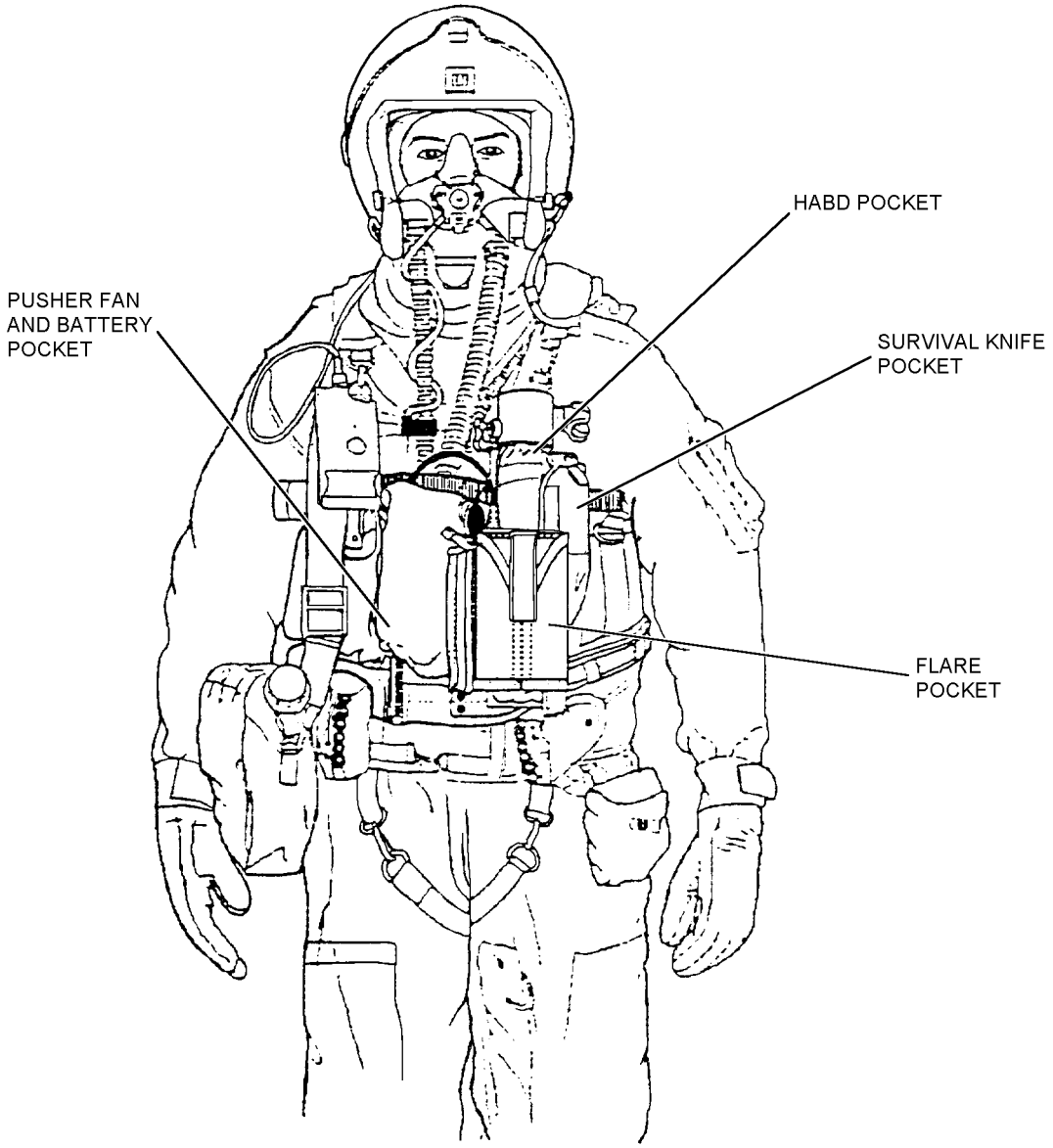

6-29

Figure 6-27. CMU-23A/P Survival Vest (CBR Configuration)

Table 6-6. CMU-23A/P Directives

Description of Modification	Application	Modification Code
Modification of CMU-23A/P, P/N 1774AS201-1, to accommodate the SRU-40/P Helicopter Aircrew Breathing Device (HABD). After modification reidentify as CMU-23A/P, P/N 1774AS300-101	All CMU-23A/P Survival Vests used in USN/USMC helicopter, E-2C, and C-2A aircraft.	66-639

6-74. INSTALLATION OF CMU-23A/P CONFIGURATION. To modify SV-2B and CMU-23/P Survival Vests to CMU-23A/P configuration proceed as follows:

Materials Required

Quantity	Description	Reference Number
As Required	Thread, Nylon, Sage Green, Size FF	V-T-295 NIIN 00-204-3787 (CAGE 81349)
1	Vest Snap Fastener Panel	1774AS407-1 (CAGE 30003)
1	Pistol Snap Fastener Panel	1774AS406-1 (CAGE 30003)
1	Pusher Fan and Battery Pocket Assembly	1774AS401-1 (CAGE 30003)
1	Flare Pocket Assembly	1774AS403-1 (CAGE 30003)
1	HABD Pocket Assembly	1774AS404-1 (CAGE 30003)
1	Survival Knife Pocket Assembly	1774AS405-1 (CAGE 30003)
1	Receiving Bracket Assembly	1774AS408-1 (CAGE 30003)
1	HABD Hose Pocket Assembly	1774AS412-1 (CAGE 30003)
1	HABD Bottle Pocket Assembly	1774AS413-1 (CAGE 30003)
1	HABD Hose Pistol Pocket (Non-CBR Mode) Assembly	1774AS414-1 (CAGE 30003)

Note: Components for initial modification will be included with upgraded respirators as they are returned to fleet activities and are not available through normal supply channels. Components required for compliance with ACC 616 following initial modifications shall be requisitioned through normal supply channels using stock numbers that will be assigned at a future date and announced via separate correspondence.

1. Prepare vest for modification.

a. Remove equipment from pistol/HABD pocket.

b. (CMU-23/P only) Remove and discard velcro and snap fasteners used to secure tactical ventilator hose.

c. (CMU-23/P only) Remove four snap fasteners and webbing adjacent to slide fastener.

d. Remove approximately six inches of stitching securing V-ring end of hoisting strap to vest.

2. Remove pistol/HABD pocket from vest by carefully cutting stitching attaching it to vest and retain pocket for further modification.

3. Position Vest Snap Fastener Panel (with studs and pile tape) so 5 1/2-inch side is directly atop and even with the bound top edge of vest.

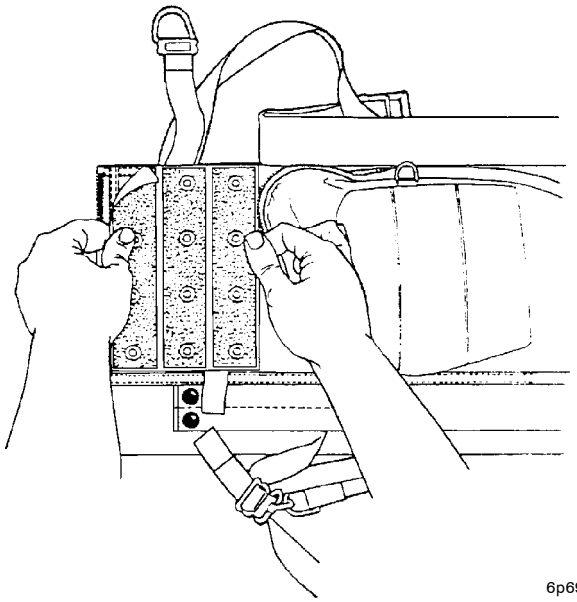

6p69s3

Step 3 - Para 6-74

a. Position 7 1/2-inch side so it is atop and even with edge of vest fabric in which slide fastener is installed.

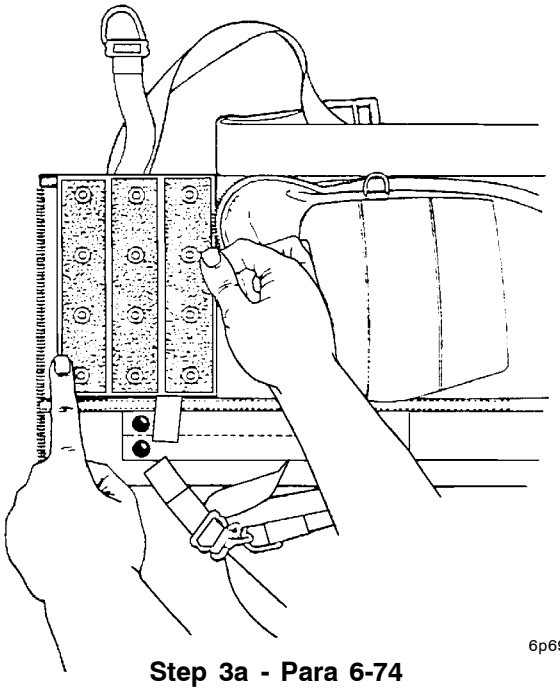

6p69s3a

Step 3a - Para 6-74

b. Sew in place with one row of stitching 1/8 inch from bound edge of panel, around perimeter of panel using 8 to 10 stitches per inch.

4. Lay Pistol Snap Fastener Panel, hook tape/socket side down.

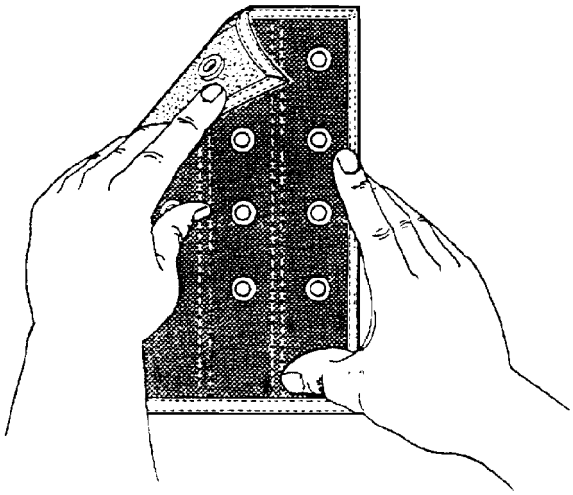

6p69s4

Step 4 - Para 6-74

a. Position rear face of pistol/HABD pocket over snap panel so edges align.

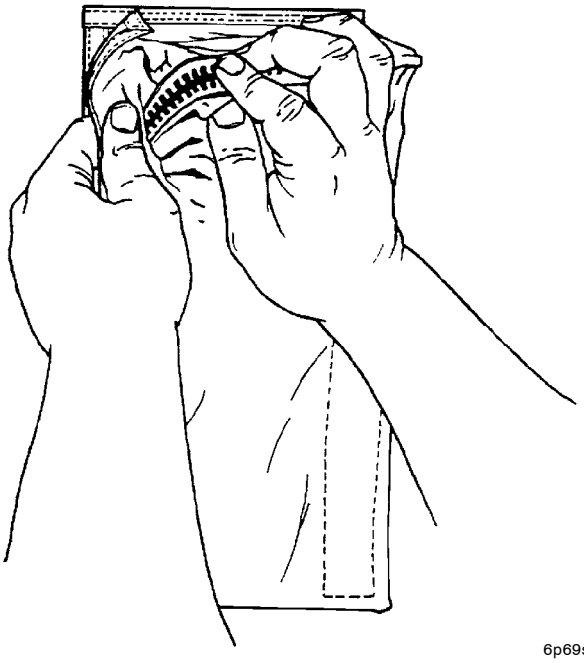

6p69s4a

Step 4a - Para 6-74

b. Sew pocket to panel around perimeters using one row of stitching 1/8 inch from edge at 8 to 10 stitches per inch.

5. Reinstall V-ring end of hoisting strap to vest in accordance with paragraph 6-40.

6. Reattach pistol/HABD pocket to vest using velcro and snap fasteners.

6-75. CMU-23A/P SURVIVAL VEST CBR CONFIGURATION. To configure the CMU-23A/P vest for use on missions into CBR threat environments proceed as follows:

CAUTION

Snap fasteners used to attach pockets to the vest are unidirectional Pull-the-Dot type which are used to prevent inadvertent separation. Resetting the snap fasteners may be difficult, use care to avoid damaging the snaps during attachment and removal.

1. Unsnap and remove pistol/HABD pocket.

2. Remove HABD from pistol/HABD pocket and reinstall it in HABD Pocket Assembly securing it to D-ring inside the pocket.

3. Remove MK-79 Illumination Signal Kit from pistol/HABD pocket and reinstall it in Flare Pocket Assembly securing the retaining lanyards to grommet install in top flap of pocket using bowline knots.

4. Remove survival knife from pistol/HABD pocket and reinstall it in Survival Knife Pocket Assembly securing retaining lanyard to grommet near top of pocket using bowline knot.

5. Attach Survival Knife Pocket to side of HABD Pocket and the Flare Pocket to the front of HABD Pocket using snap fasteners and hook and pile tape.

6. Lay CMU-23A/P Survival Vest on flat surface with snap fastener panel facing up and on left. See Figure 6-28.

a. Attach Receiving Bracket Assembly to six snap fasteners in upper left quadrant of panel.

b. Attach HABD Pocket Assembly (with attached knife and flare pockets) to four vertically aligned snaps on right side of panel.

7. Enclose pusher fan and manifold of the respirator assembly in the Pusher Fan/Battery Pocket Assembly.

a. Ensure pusher fan inlet is not obstructed.

b. Route power cord so it exits pocket near pusher fan inlet.

c. Ensure slide fastener is fully closed.

8. Insert power cord in battery pack 3-pin receptacle and stow battery pack in pocket so power cord exits through battery pocket opening.

6-76. FABRICATION OF HELICOPTER AIRCREW BREATHING DEVICE, SRU-40/P HABD POCKET ASSEMBLY. The HABD pocket assembly consists of a Bottle Pocket and a CBR Hose Pocket or Non-CBR Hose Pocket to be fabricated as follows:

Materials Required

Quantity	Description	Reference Number
As Required	Cloth, Nylon Duck	MIL-C-7219, NIIN 01-173-4436
As Required	Fastener Tape, Hook, 1-Inch	MIL-F-21840, NIIN 00-106-5973
As Required	Fastener Tape, Pile, 1-Inch	MIL-F-21840, NIIN 00-405-2263
As Required	Fastener Tape, Hook, 2-Inch	MIL-F-21840, NIIN 00-450-9837
As Required	Fastener Tape, Pile, 2-Inch	MIL-F-21840, NIIN 00-405-2265
As Required	Webbing, Textile, 1-Inch	MIL-W-5664D, NIIN 00-263-3600
As Required	Webbing, Textile, 1-Inch	MIL-T-5038G, NIIN 00-261-8579
As Required	Tape, Textile, 1-Inch	MIL-T-5038G, NIIN 00-753-6144
As Required	Thread, Nylon, Size E, Sage Green	V-T-295, NIIN 00-204-3884
3	Cap, Snap Fastener	MS27983-1, NIIN 00-891-9073
3	Socket, Snap Fastener	MS27983-2, NIIN 00-945-2577
6	Stud, Snap Fastener	MS27983-3, NIIN 00-276-4908
6	Post, Snap Fastener	MS27983-4, NIIN 00-276-4978
3	Grommet, Size 00	MS20230B20, NIIN 00-291-0302
1	Strap, Tie Down	MIL-S-23190, NIIN 00-111-3208
1	Bead, Inflation Handle (Note)	975AS122-1
1	Breathing Device, Helicopter Aircrew, SRU-40/P	1586AS301-1

Note: Obtain bead for inflation handle from Beaded Handle Assy (P/N 975AS121-11, NIIN 01-120-4752, or salvage from LPU-21 or LPU-23 beaded handles.

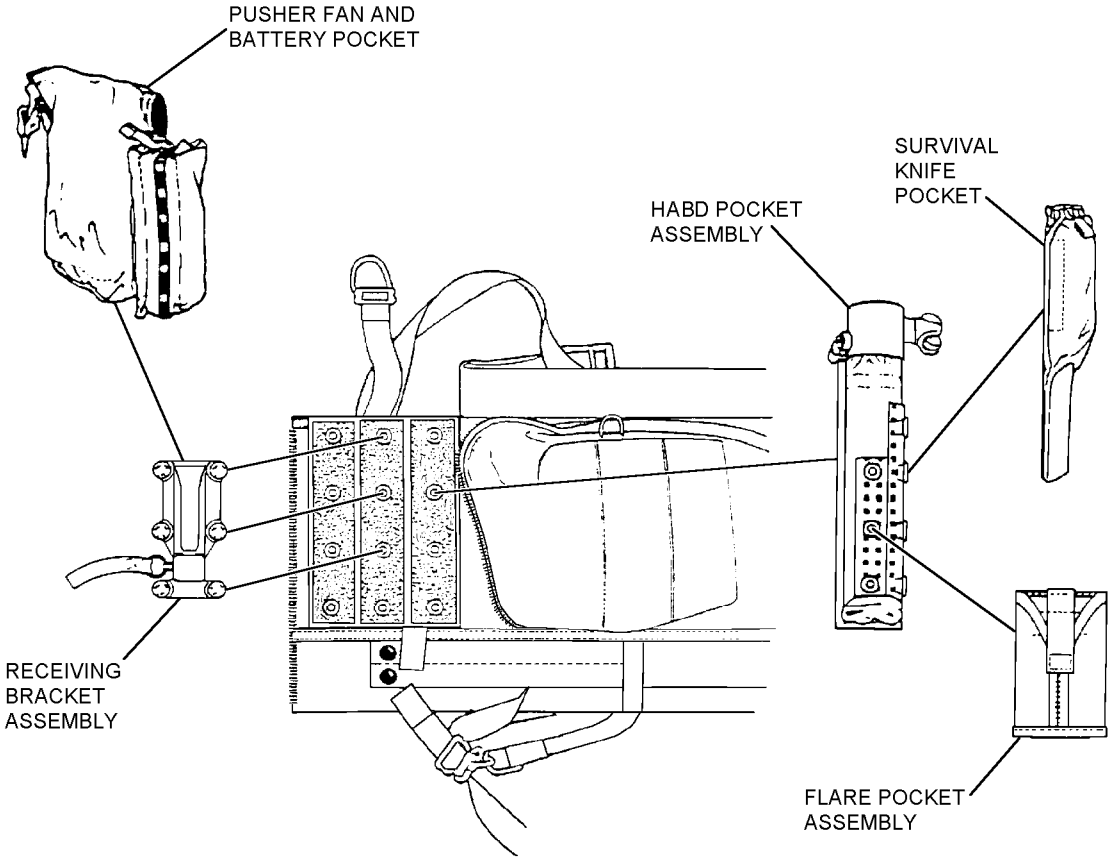

6-30

Figure 6-28. Attachment of CMU-23A/P Survival Vest CBR Components

NOTE

Sear all cut edges of nylon webbing and tape to prevent fraying (recommend use of Cutter, Nylon Webbing, NIIN 00-956-008). Do not form sharp edges. Unless otherwise specified all stitching shall be Type 301, 8 to 10 stitches per inch, with minimum 3/4-inch back or over stitch. All stitching shall be 1/8 inch from edge unless otherwise specified. All binding tape shall be sewn using two rows of stitching 1/8 inch apart. Use china marker or equivalent for all markings.

6-77. Fabrication of Bottle Pocket Panel. Refer to Figure 6-29 and proceed as follows:

1. Cut a piece of nylon duck cloth 4 3/4 X 8 inches and bind the 8-inch edges with 1-inch binding tape.

2. Cut two 4 3/4-inch lengths of 2-inch hook tape.

3. Orient duck cloth so 8-inch edges are at top and bottom.

4. Measure and mark bottom edge 1 3/4 inches from lower left-hand corner.

5. Measure and mark top edge 1 3/4 inches from top left-hand corner.

6. Draw a vertical line connecting the two 1 3/4-inch positions.

7. Place the two pieces of hook tape with 4 3/4-inch edges side by side along the right side of the vertical line.

8. Sew all edges of both pieces of hook tape in place.

9. Measuring from the top left-hand corner mark portions at 2 3/4 and 4 3/4 inches along top edge.

10. Measuring from the lower left-hand corner mark positions at 2 3/4 and 4 3/4 inches along bottom edge.

11. Draw vertical lines connecting the 2 3/4-inch portions and the 4 3/4-inch positions.

12. On the vertical line between the 2 3/4-inch positions, measuring from the top, mark portions at 1/2 inch, 2 1/2 inches, and 4 1/2 inches.

13. On the vertical line between the 4-3/4-inch positions, measuring from the top, mark positions at 1/4 inch, 2-1/4 inches, and 4-1/4 inches.

14. Punch holes at marked positions.

15. Set posts and studs in the holes with studs showing on the hook tape side.

16. From the top edge, between the two lengths of installed hook tape, measure down 3/8 inch and mark.

17. Punch a hole at the mark and set a grommet in the hole.

18. Measuring from the top left-hand corner mark a position on the top edge at 1/2 inch.

19. Measuring from the bottom left-hand corner mark a position on the bottom edge at 1/2 inch.

20. Draw a vertical connecting the two 1/2-inch positions.

21. Fold the bottle panel in half so the 4 3/4-inch seared edges meet and the hook tape is showing.

22. Stagger the placement of the top and bottom edges to be side by side rather than stacked to reduce the number of layers.

23. Sew a row of stitches along the line connecting the 1/2-inch marks.

6-78. Fabrication of the HABD Hose Pocket Panel For Non-CBR Configuration. Refer to Figure 6-30 and proceed as follows:

1. Cut a piece of nylon duck cloth measuring 10 X 6 1/2 inches.

2. Orient the cloth so the 6 1/2-inch edges are at the top and bottom.

3. Measure and mark the right-hand edge 1 1/4 inches down from the top right-hand corner.

4. Draw a cutline from the top left-hand corner to the 1 1/4-inch mark on the right-hand edge and cut the fabric along the line.

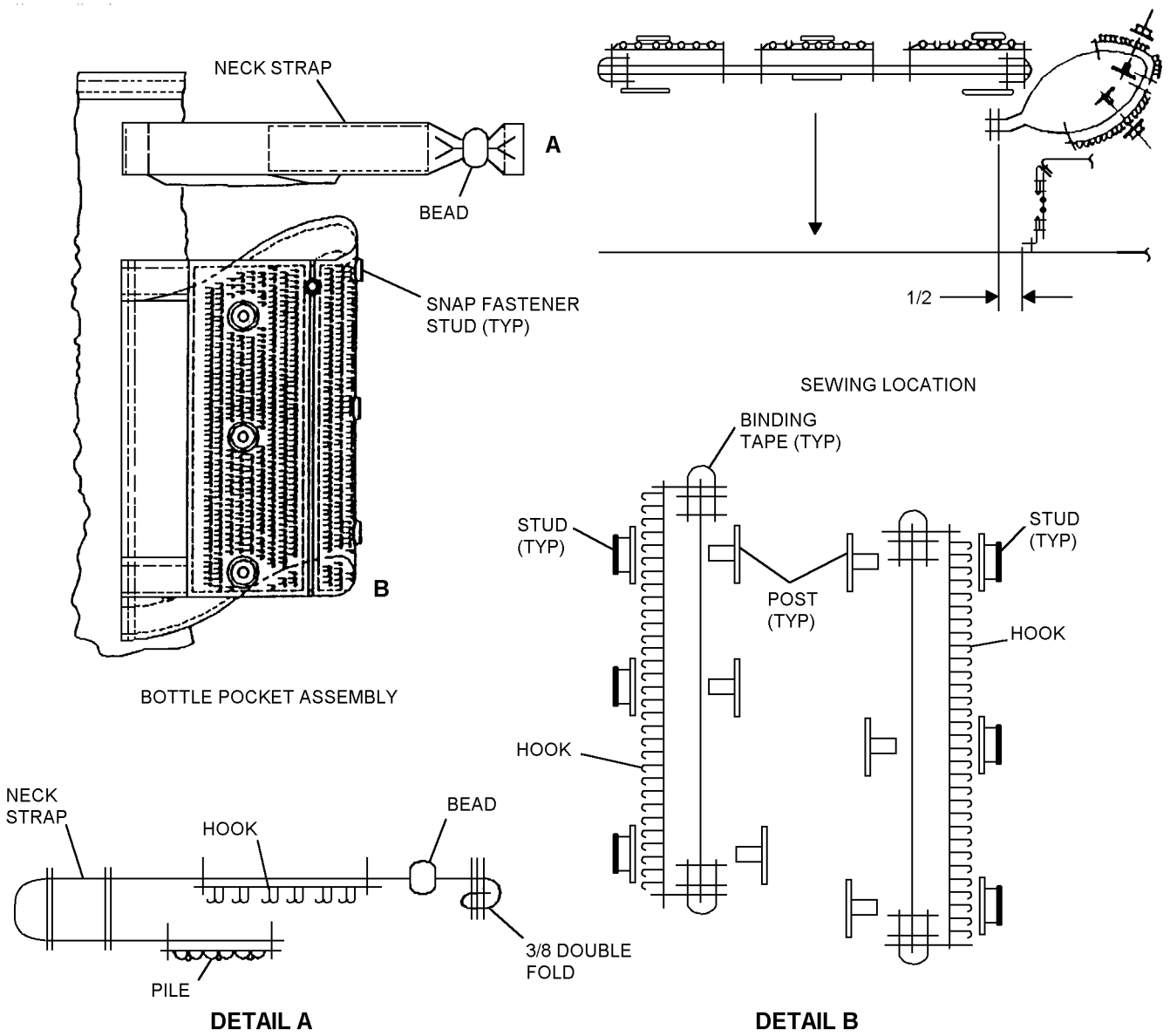

6-31

Figure 6-29. Fabrication of SRU-40/P HABD Bottle Pocket Assembly

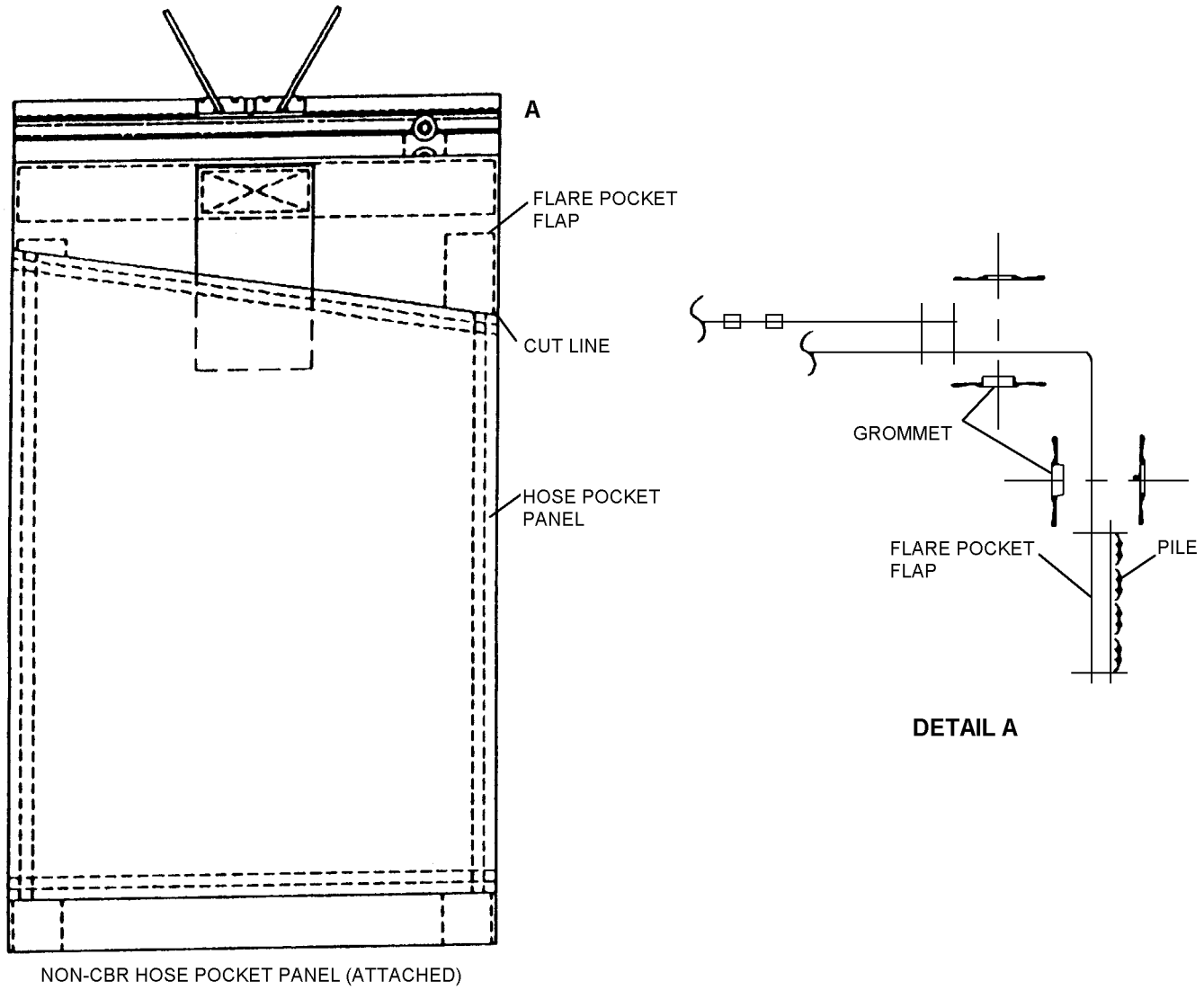

6-32

Figure 6-30. Non-CBR Hose Pocket Assembly

5. Double fold the top and bottom edges 3/8 inch to the back side of the fabric.

6. Stitch a hemline 1/8 inch from the outer edge and another 1/4 inch from the edge.

7. Single fold the side edges 3/8 inch to the back side of the fabric and sew edges in place 1/8 inch from folded edge.

6-79. Attaching HABD Hose Pocket Panel to Pistol Pocket. Refer to Figure 6-30 and proceed as follows:

1. Unfasten the flare pocket on the pistol pocket.

2. On the face of the flare pocket flap, measure and mark the left edge 1 inch down from the top left-hand corner.

3. On the face of the flare pocket flap, measure and mark the right edge 2 1/4 inches down from the top right-hand corner.

4. Position the hose pocket panel on the outside face of the flare pocket flap so the top left-hand corner of the panel is aligned at the 1-inch mark and the top right-hand corner is aligned with the 2 1/4-inch mark.

5. Sew the left and right sides of the panel in place on the flare pocket flap using one row of stitches 1/8 inch from the outer edge and another at 1/4 inch from the outer edge. Reinforce with a minimum backstitch of 1 inch.

6-80. Fabrication of HABD Bottle Neck Strap. Refer to Figure 6-29 and proceed as follows:

1. Cut a 12 1/2-inch length of 1-inch webbing. Measure and mark 2 inches from one end.

2. Turn webbing over and, measuring from the same end as in step 1, mark webbing at 4 inches, 6 1/2 inches, and 9 1/2 inches.

3. Cut a 2-inch length of 1-inch pile tape and sew on webbing between the end and the 2-inch mark measured in step 1.

4. Cut a 3-inch length of 1-inch hook tape and sew in place on webbing between 6 1/2 inch and 9 1/2-inch marks measured in step 2.

5. On hook tape end of webbing, slide a bead onto the webbing until it touches the hook tape.

6. Make 3/8-inch double fold, end over end, on end of webbing and sew the fold together using three rows of stitches placed side by side.

7. Fold webbing at the 4-inch mark so hook tape is on the inside and pile tape is outside.

6-81. Setting Grommet on Pistol Pocket. Refer to Figure 6-30 and proceed as follows:

1. Unfasten the upper flap of the flare pocket.

2. Turn pocket over and lay it flat so the pile tape is facing up and is at bottom.

3. Measure and mark the right-hand edge in two places; 1 1/4 inches and 1 3/4 inches up from the bottom right-hand corner.

4. Measure and mark grommet locations 1 1/2 inches to the left of the 1 1/4 and 1 3/4-inch marks made in step 3.

5. Punch holes at marked locations and set grommets.

6-82. FABRICATION OF HABD HOSE POCKET FOR CBR CONFIGURATION. The HABD hose pocket consists of two major parts, the back panel and the front panel.

6-83. Fabrication of Back Panel of HABD Hose Pocket. Refer to Figure 6-31 and proceed as follows:

1. Measure and cut a piece of nylon duck cloth 16 inches X 4 1/2-inches.

2. Orient the cloth so the 4 1/2-inch edges are at the top and bottom.

3. Measure and mark the right-hand edge of the cloth 1 1/4 inches up from the lower right-hand corner.

4. Measure and cut 6 1/2-inch length of 2-inch pile tape.

a. With pile facing up and the length of the pile tape positioned with its right edge aligned with the right edge of the cloth, place lower right-hand corner of pile tape at the 1 1/4-inch mark made in step 3.

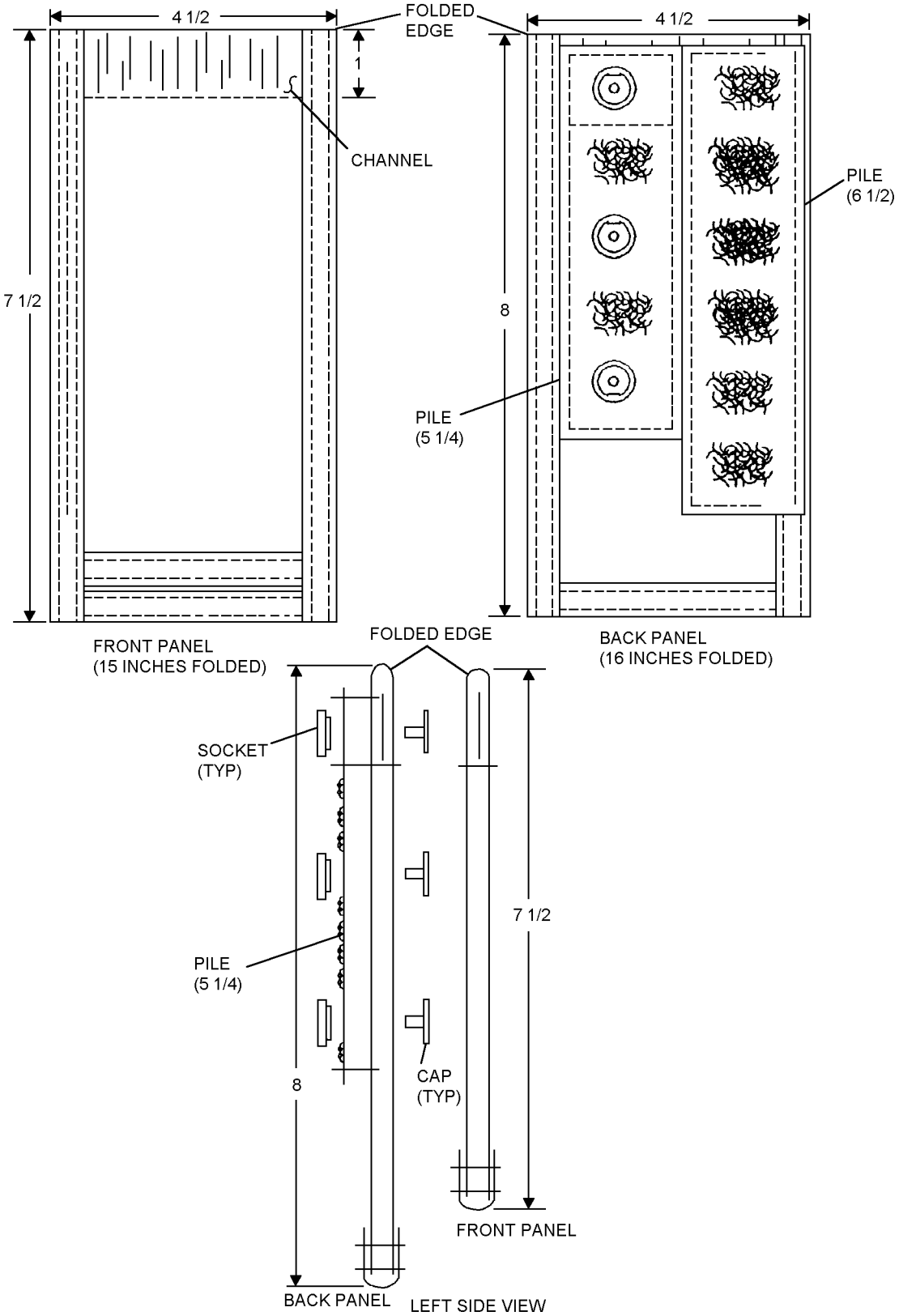

6-33

Figure 6-31. Fabrication of CBR Hose Pocket Assembly

b. Sew the left edge of the pile tape in place.

c. Sew the top and bottom of the pile tape in place to within 3/4 inch of the right edge of the cloth.

5. From the lower left-hand corner of the sewn pile tape, measure up 2 1/2 inches and mark the position on the left edge of the tape.

6. Measure and cut a 5 1/4-inch length of 2-inch pile tape.

a. Place pile tape next to the sewn edge of the pile tape attached in step 4b aligning the top edges and ensuring the lower right-hand corner of the tape is positioned at the 2 1/2-inch mark made in step 5.

b. Sew all edges of the 5 1/4-inch pile tape in place.

c. Measure and mark a line down the center of the 5 1/4-inch length of pile tape.

d. Measuring up the center line from the bottom edge of the 5 1/4-inch tape, mark positions at 3/4 inch, 2 3/4 inches, and 4 3/4 inches.

7. Fold the panel in half leaving the 4 1/2-inch folded edge as the top.

a. Bind the bottom edge of the panel with 1-inch textile tape.

b. Measure and mark the right and left edges 1 inch down from the folded edge of the top.

c. Draw a sew line connecting the 1-inch marks.

d. Sew along the sew line to 3/4 inch from the right edge creating a 1-inch wide channel.

8. Measure and cut a 3-inch length of 1-inch elastic and slide the elastic through the channel created in step 7d.

9. Align the right end of the elastic with the right edge of the channel.

10. Fold back the 6 1/2-inch pile tape installed in steps 4 through 4c and sew the right end of the elastic to the pile tape (through the elastic and the nylon fabric, not through the pile tape).

6-84. Fabrication of Front Panel of HABD Hose Pocket. Refer to Figure 6-31 and proceed as follows:

1. Measure and cut a piece of nylon duck cloth 15 inches X 4 1/2 inches.

2. Orient the cloth so the 4 1/2-inch edges are at the top and bottom.

3. Fold the cloth in half so the 4 1/2-inch folded edge is now at the top.

4. Bind the two bottom edges with 1-inch textile tape.

5. Measure and mark right and left edges 1 inch down from the top folded edge.

a. Draw a sew line connecting the 1-inch marks.

b. Sew along the sew line creating a 1-inch channel.

6. Measure and cut a 3-inch length of 1-inch elastic and slide the elastic into the channel.

7. Align one end of the elastic with one of the edges of the channel and sew the edges together.

6-85. Assembly of the HABD Hose Pocket. Refer to Figure 6-31 and proceed as follows:

1. Place the back panel on top of the front panel with the pile tape side of the back panel facing up and the sewn elastic edges of each panel aligned, one on top of the other.

2. Align the top edges, top corners, and the left and right edges of the panels.

3. Fold back the 6 1/2-inch pile tape and bind the right edges of the panels together with 1-inch textile tape.

4. Sew right edge of 6 1/2-inch pile tape in place over binding tape.

5. Stretch remaining edge of elastic of back panel through the channel to opposite edge and sew in place.

6. Punch holes through back panel only at 3/4-inch, 2 3/4-inch, and 4 3/4-inch marks made on center line of pile tape in step 6d, paragraph 6-83.

a. Set caps and sockets in holes so sockets show on the pile tape side.

b. The top two sockets shall have their flat locking edge on top and the lowest socket shall have the flat locking edge toward the bottom (see Figure 6-31).

7. Stretch elastic of the front panel through channel to opposite edge and sew remaining edge in place.

8. Bind left edges of panels together using 1-inch textile tape.

6-86. Attachment of HABD Bottle Pocket. Refer to Figure 6-29 and proceed as follows:

1. Locate the point between the attachment point of the snap panel to the vest and the bottom edge of the side fastener tape of the general pocket.

2. Draw a line outlining where the right edge of the snap panel lays on the vest.

3. Carefully remove the stitching from the right edge of the snap panel that attaches the panel to the vest.

4. Measure and mark a line 1/2 inch to the left of the snap panel edge line.

5. Place the bottle pocket on the vest with the bottom of the bottle pocket just above the edge of the lower binding on the vest.

6. Align the 4 3/4-inch seared edges with the 1/2-inch line on the vest and the 1/2-inch marks on the pocket with the line from the snap panel edge.

7. Sew the bottle pocket in place with two rows of stitches side by side beginning 1/4 inch from the seared edge of the 4 3/4-inch side. Be careful not to sew beyond the stitching of the bottle pocket.

6-87. Attachment of the HABD Bottle Neck Strap. Refer to Figure 6-29 and proceed as follows:

1. Locate the binding on the top edge of the vest.

2. Measure and mark 1 inch to the left of the snap panel edge line at the bottom edge of the binding.

3. Orient the bottle neck strap so the folded edge is on the left edge and the bead is on the right.

4. Place the top corner of the fold at the 1-inch mark.

5. Sew strap in place with two rows of stitches side by side 1-inch from the folded edge.

6. Resew the snap panel onto the vest using two rows of stitches along the original stitch lines.

6-88. Attaching Hook Tape to CBR Pusher Fan Pocket When Using the HABD Bottle. Refer to Figure 6-32 and proceed as follows:

1. Measure and cut a 5-inch length of 2-inch hook tape.

2. Locate top left corner of the right side panel of the CBR pusher fan battery pocket.

3. Place the hook tape on the battery pocket aligning the 2-inch edge of the hook tape with the top edge of the pocket and the left edge of the pocket.

4. Sew hook tape in place.

6-89. REMOVAL AND DISPOSITION OF THE SRU-40/P HABD. Prior to beginning the modification in accordance with ACC 639 the SRU-40/P and its supporting modifications must be removed from the vest as follows:

1. Remove the SRU-40/P from the pistol pocket and return it to supply in F condition.

2. Remove stitching securing the SRU-40/P tether inside the pistol pocket; remove and discard the tether.

3. If vest is configured with the SRU-40/P pocket assembly, P/N 1774AS304-1, unsnap pocket assembly from vest and return it to supply in F condition.

6-90. STOWING THE SRU-40/P HABD IN RECONFIGURED SURVIVAL VEST. Ensure the SRU-40/P HABD has been inspected in accordance with NAVAIR 13-1-6.5 and proceed as follows:

1. Check to ensure HABD is in RFI condition.

2. Place HABD in new pocket and secure bottle neck strap around bottle neck.

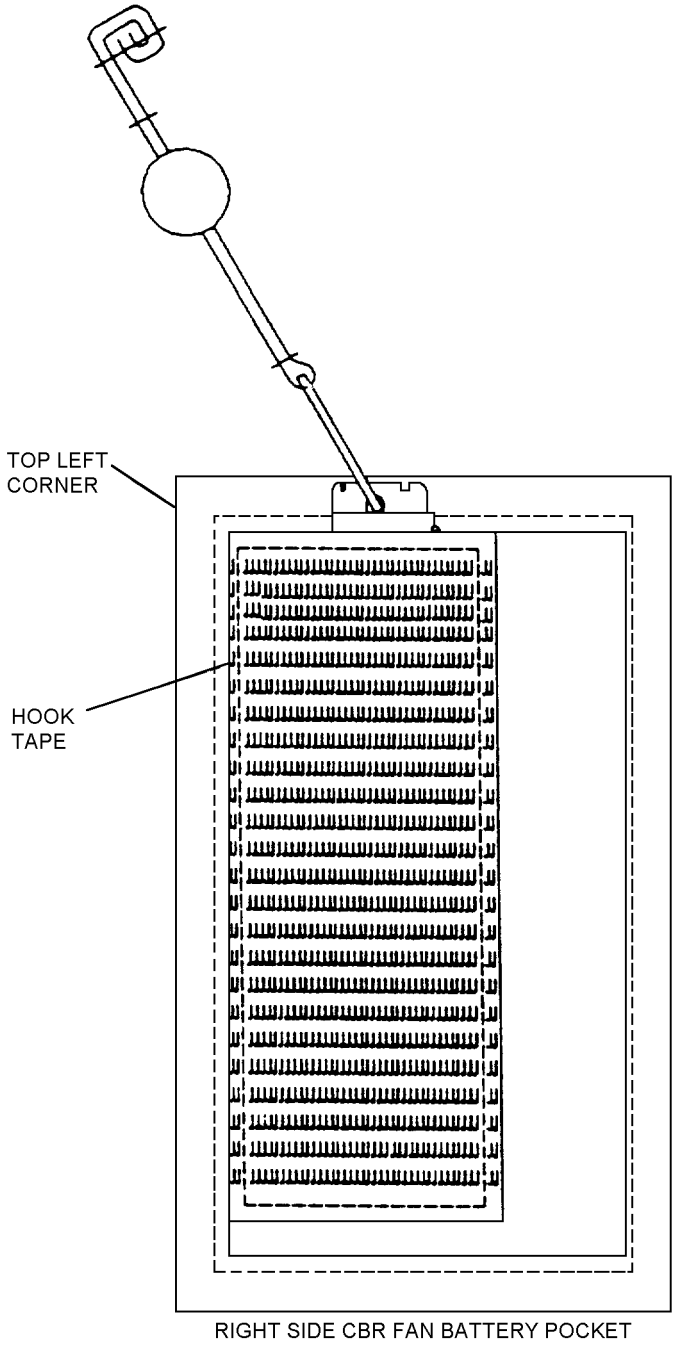

6-34

Figure 6-32. Attachment of Hook Tape to CBR Pusher Fan Battery Pocket

3. Route regulator hose down through top of hose pocket in a single U-shaped loop, leaving regulator out.

6-91. Stowing Non-CBR Configuration.

1. Pass a plastic tie wrap through the center of the mouthpiece cover, around the top and through both grommets.

2. Secure tie wrap so it is tight around the cover, but not pinching.

3. Place regulator inside mouthpiece cover and position the mouthpiece so it is between the bottle and the regulator with the regulator purge cover facing toward the entrance slide fastener of the vest.

6-92. Stowing CBR Configuration.

1. Pass plastic tie wrap through the center of the mouthpiece cover, around the narrowest part of the cover and through both grommets.

2. Secure the tie wrap tightly around the cover.

3. Place regulator inside mouthpiece cover and position the mouthpiece so it is between the bottle and the regulator with the regulator purge cover facing toward the entrance slide fastener of the vest.

6-93. FABRICATION OF SRU-40/P HABD TETHER. The SRU-40/P HABD Tether is comprised of two assemblies, a snap hook assembly and a handle assembly. Each assembly is fabricated as follows:

Materials Required

Quantity	Description	Reference Number
1	Bead, Inflation Handle	975AS122-1
As Required	Thread, Nylon, Size E, SG Type 1 or Type 2	V-T-295 NIIN 00-204-3884
As Required	Fastener Tape, Pile, 1-Inch	MIL-F-21840 NIIN 00-106-5974
As Required	Fastener Tape, Hook, 1-Inch	MIL-S-21840 NIIN 00-106-5973
1	Snap Hook, 1-Inch Base	MIL-S-43770/1 NIIN 01-187-9402
As Required	Cord, Type 1A	MIL-C-5040 NIIN 00-292-9920
As Required	Webbing, 1-Inch, Nylon, Type II, Shade 33538	MIL-W-4088
As Required	Tape, Webbing, 1-Inch, (Alternate)	MIL-T-5038 NIIN 00-262-1643

NOTE

All stitching shall be 301 lock stitch, 6 to 9 stitches per inch, 1/8 inch from edge.

1. For snap hook assembly, measure 8-inch length of 1-inch webbing and sear cut ends.

a. Measure and mark 3 inches from either end of webbing.

b. Insert marked end of webbing through snap hook and fold over to 3-inch mark and sew using 3/4 x 3/4-inch cross boxstitch.

c. Cut 3 1/2-inch of 1-inch hook tape and fold in half with hook side out. Sandwich free-end of webbing between folded hook tape and sew together using 3/4 x 1 1/2-inch boxstitch.

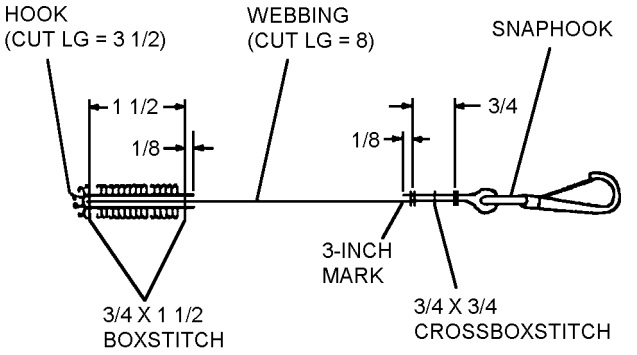

Steps 1b and 1c - Para 6-93

2. For handle assembly, measure 6-inch length of 1-inch webbing and sear cut ends.

a. Thread end of webbing through inflation handle bead; center, fold in half, and align webbing ends.

b. Cut 3 1/2-inch length of pile tape. Measure and mark sewing reference line at mid point of pile tape.

c. Place pile tape on top of folded webbing with pile facing out. Align end of pile with ends of webbing and sew together using 3/4 x 1 1/2-inch cross boxstitch leaving opposite end of pile tape free and extending beyond handle bead.

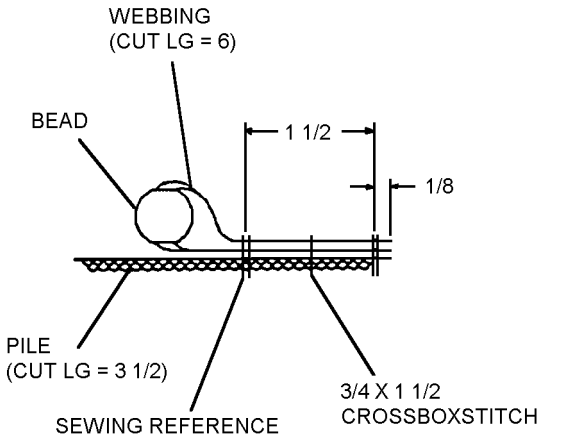

Steps 2a thru 2c - Para 6-93

3. To assemble snap hook assembly and handle assembly, align sewn end of pile tape on handle assembly with end of hook tape sewn to top of snap hook webbing. Mate pile tape with hook tape around end of snap hook assembly and along bottom of webbing.

4. Cut a 24-inch length of cord and thread end through webbing loop on which handle bead is installed and secure loose loop with bowline knot and lock with overhand knot. Total length of assembled tether from tip of snap hook to neck of HABD should be 29 inches ±1 inch.

NOTE

The opposite end of the cord is secured to neck of HABD bottle.

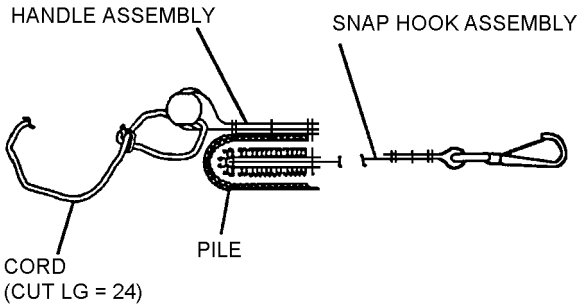

Steps 3 and 4 - Para 6-93

6-94. FABRICATION OF CMU-23A/P CONFIGURATION COMPONENTS. Figure 6-33 illustrates the locations of the components which makes up the CBR mode configuration of the CMU-23A/P Survival Vest.

Materials Required

Quantity	Description	Reference Number
1 Yd	Nylon Fabric	MIL-C-7219 NIIN 01-173-4436
20″X20″	Vinyl Coated Nylon	MIL-C-20696 NIIN 00-616-0022
2	Slide Fastener Size MED	A-A-55634 NIIN 00-252-5398
2	Bottom Stops LG	A-A-55634 NIIN 00-472-8679
As Required	Thread, Nylon Size E	V-T 295 NIIN 00-204-3884
8″	Elastic, 1″ W	MIL-W-5664 NIIN 00-263-3600
2	Grommet Size "00″	MS20230B20 NIIN 00-291-0302
4	Rivets	MS20426AD4-6 NIIN 00-117-6951
12″	Webbing, Textile Type IV	MIL-T-5038 NIIN 00-655-5123
1 Yd	Fastener Tape, Hook 2″	MIL-F-21840 NIIN 00-450-9837
1 Yd	Fastener Tape, Pile 2″	MIL-F-21840 NIIN 00-405-2265

Materials Required (Cont.)

Quantity	Description	Reference Number
26	Cap, Snap Fastener	MS27983-1 NIIN 00-891-9073
26	Socket, Snap Fastener	MS27983-2 NIIN 00-893-6243
20	Stud, Snap Fastener	MS27983-3 NIIN 00-276-4908
20	Post, Snap Fastener	MS27983-4 NIIN 00-276-4978
1 Yd	Faster Tape, Hook 1″	MIL-F-21840 NIIN 00-106-5973

Materials Required (Cont.)

Quantity	Description	Reference Number
1 Yd	Fastener Tape, Pile 1″	MIL-F-21840 NIIN 00-106-5974
6	Tape, Textile Nylon Type III 1″	92XE-18103-A2B NIIN 00-753-6144
24″	Tape, Textile Nylon Type III 1/2″	MIL-T-5038 NIIN 00-255-7673
22″	Tape, Textile Nylon Type III 1/2″	MIL-T-5038 NIIN 00-255-7673

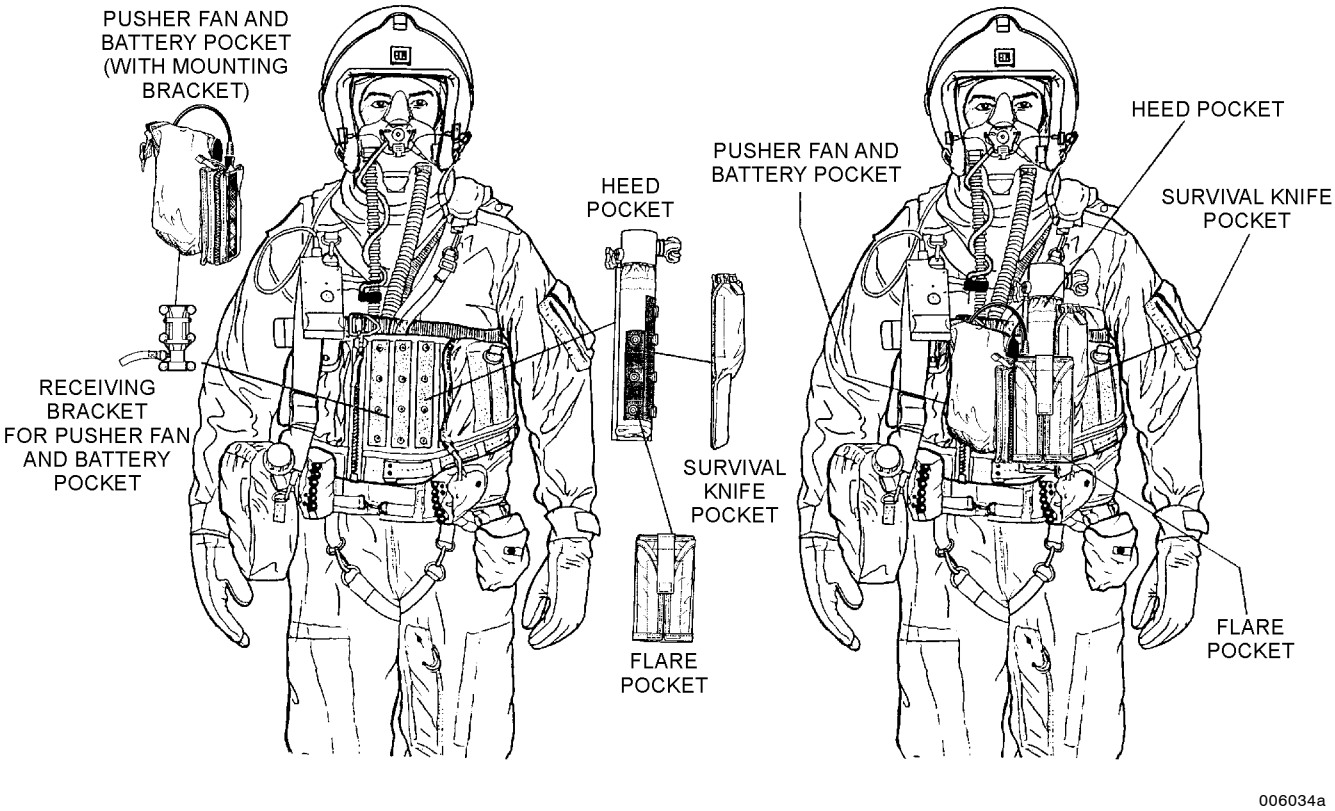

Figure 6-33. CMU-23A/P Survival Vest (CBR Mode)

6-95. Fabrication of CBR Pistol Pocket Snap Fastener Panel. (Figure 6-34)

NOTE

All stitching shall be in accordance with ASTM-D-6193. Stitches per inch shall be 7 to 10 stitches per inch with 3/4-inch backstitching or overstitching unless otherwise stated. All nylon material will be sear cut. Position all patterns with the warp direction of the fabric. Edge stitching shall be 1/8 inch from edge unless otherwise stated.

1. Place pistol pocket snap fastener panel pattern (Figure 6-35) on to nylon fabric, mark all points sew line edges and cut out the panel. Turn panel over, position snap fastener panel pattern on fabric and mark reinforcement panel location sew lines.

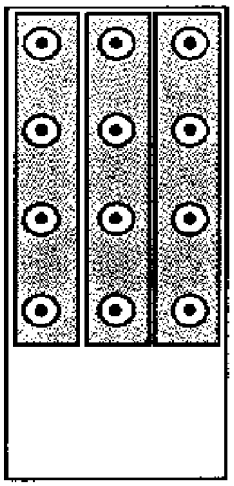

006034a1

Figure 6-34. CBR Pistol Pocket Snap Fastener Panel

2. Place pistol pocket snap fastener reinforcement panel pattern (Figure 6-36) on the Herculite fabric, trace and cut out the reinforcement panel.

3. Lay reinforcement panel fabric onto the snap fastener panel nylon fabric within the sew lines indicated and sew in place.

4. All four sides of the cut edge fabric of the snap fastener panel shall be folded inboard 3/4 inch, covering all raw edges of the reinforcement panel and sew in place.

5. With the snap fastener panel nylon side face up, position the reinforcement panel pattern properly on top and mark locations for, hook tape placement. Cut three pieces of two-inch hook tape 7 1/2 inches long and sew in place at locations marked.

6. With the two inch hook tape sewn, position reinforcement panel pattern on top of hook tapes, mark the 12 snap locations and punch cut holes for installation of snaps.

NOTE

Install the six snap sockets closest to the top with the lock lug towards the top edge of panel. When positioned, the pull the dot release action will be from the center of the panel. Install the six remaining snap sockets with the locking lug towards the bottom, so the pull the dot release action from the center will be the opposite direction of the previously installed snaps.

7. Install the 12 sockets (MS27983-2) and caps (MS27983-1) with the sockets on the hook tape side of the pistol pocket snap panel.

8. Refer to ACC 616 for location and sewn placement on to pistol pocket back.

NOTE: Procedures for the construction of the pattern.
1. Print out all segments of pattern.
2. Trim all printed segments of pattern at dashed trim line ensuring alignment marks (crosses) remain on the pattern.
3. Align crosses with adjacent pattern segments and tape in place.
4. After taping, cut out pattern.

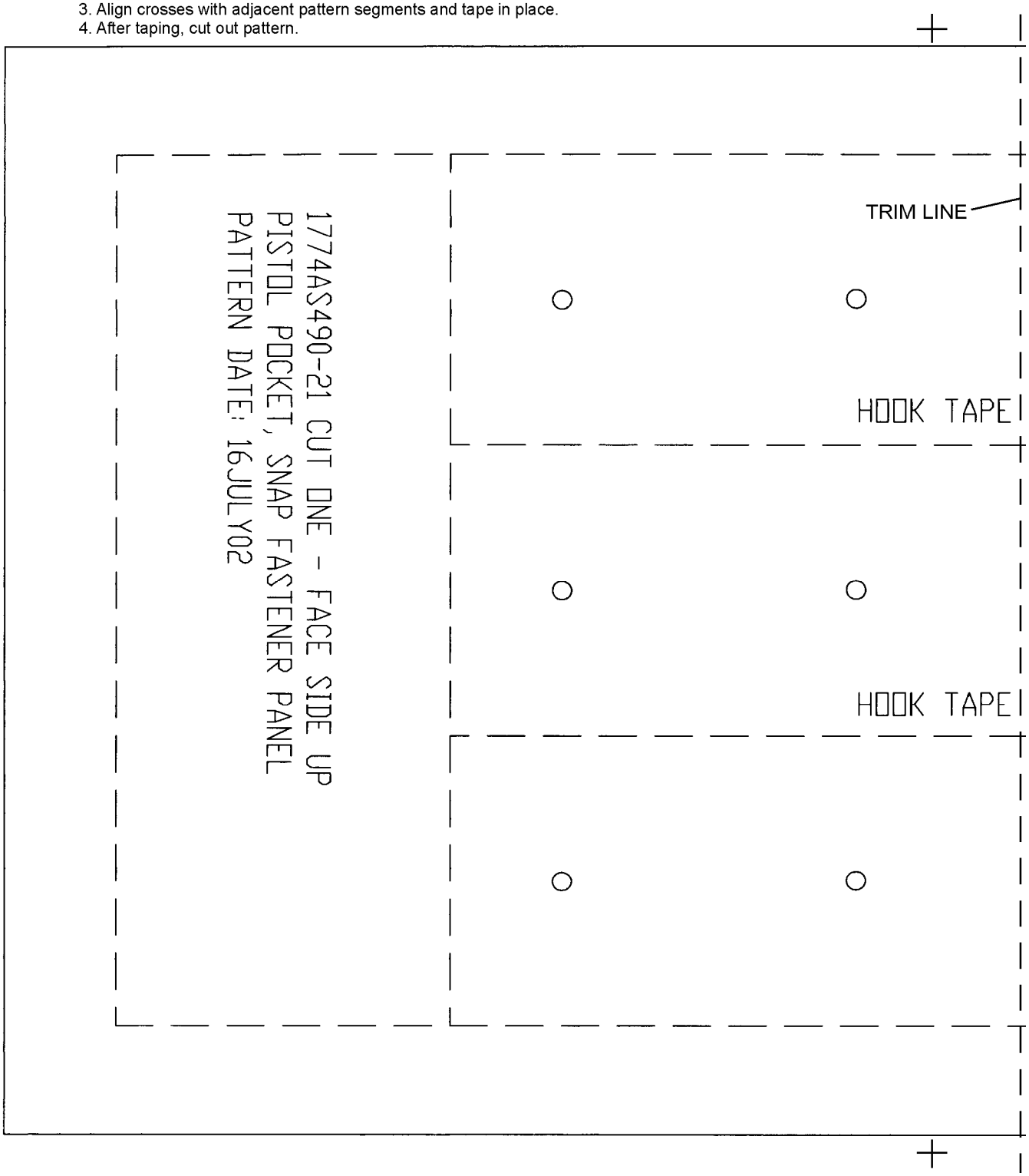

This figure has been divided into multiple segments to facilitate the printing of the pattern.

06034b01

Figure 6-35. Pistol Pocket Snap Fastener Panel Pattern (Sheet 1 of 2)

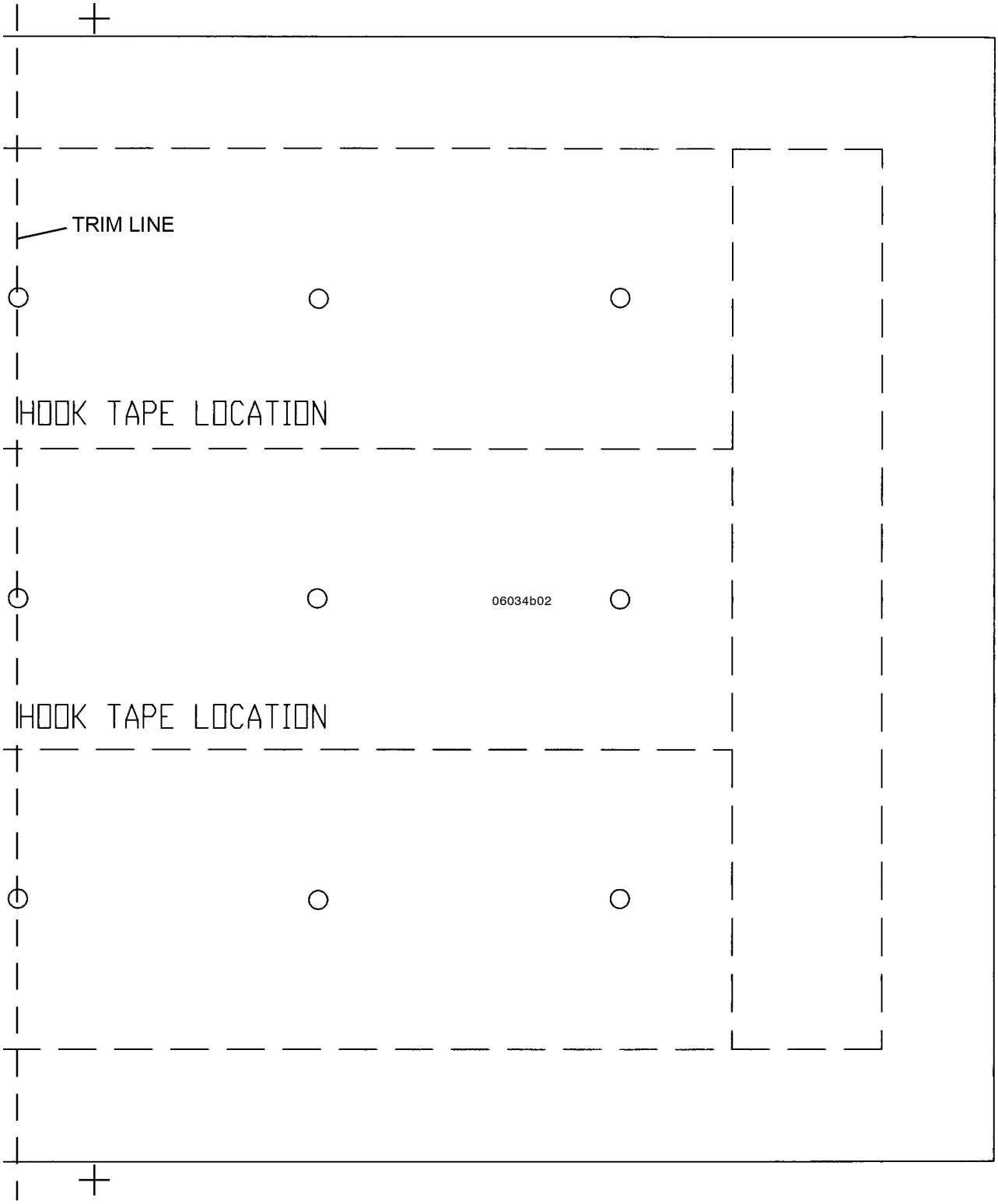

Figure 6-35. Pistol Pocket Snap Fastener Panel Pattern (Sheet 2 of 2)

NOTE: Procedures for the construction of the pattern.

1. Print out all segments of pattern.
2. Trim all printed segments of pattern at dashed trim line ensuring alignment marks (crosses) remain on the pattern.
3. Align crosses with adjacent pattern segments and tape in place.
4. After taping, cut out pattern.

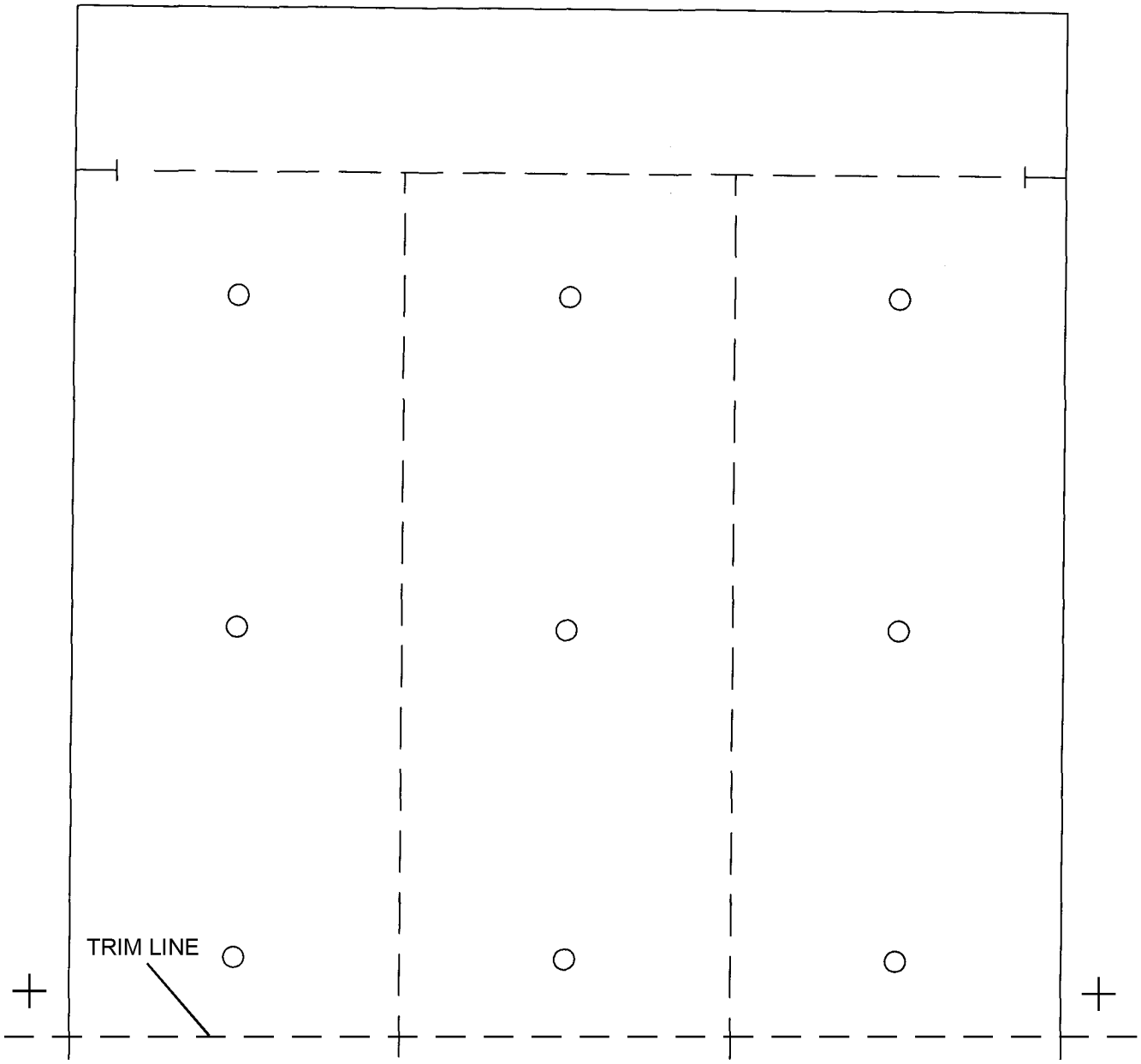

This figure has been divided into multiple segments to facilitate the printing of the pattern.

06034c01

Figure 6-36. Pistol Pocket Snap Fastener Reinforcement Panel Pattern (Sheet 1 of 2)

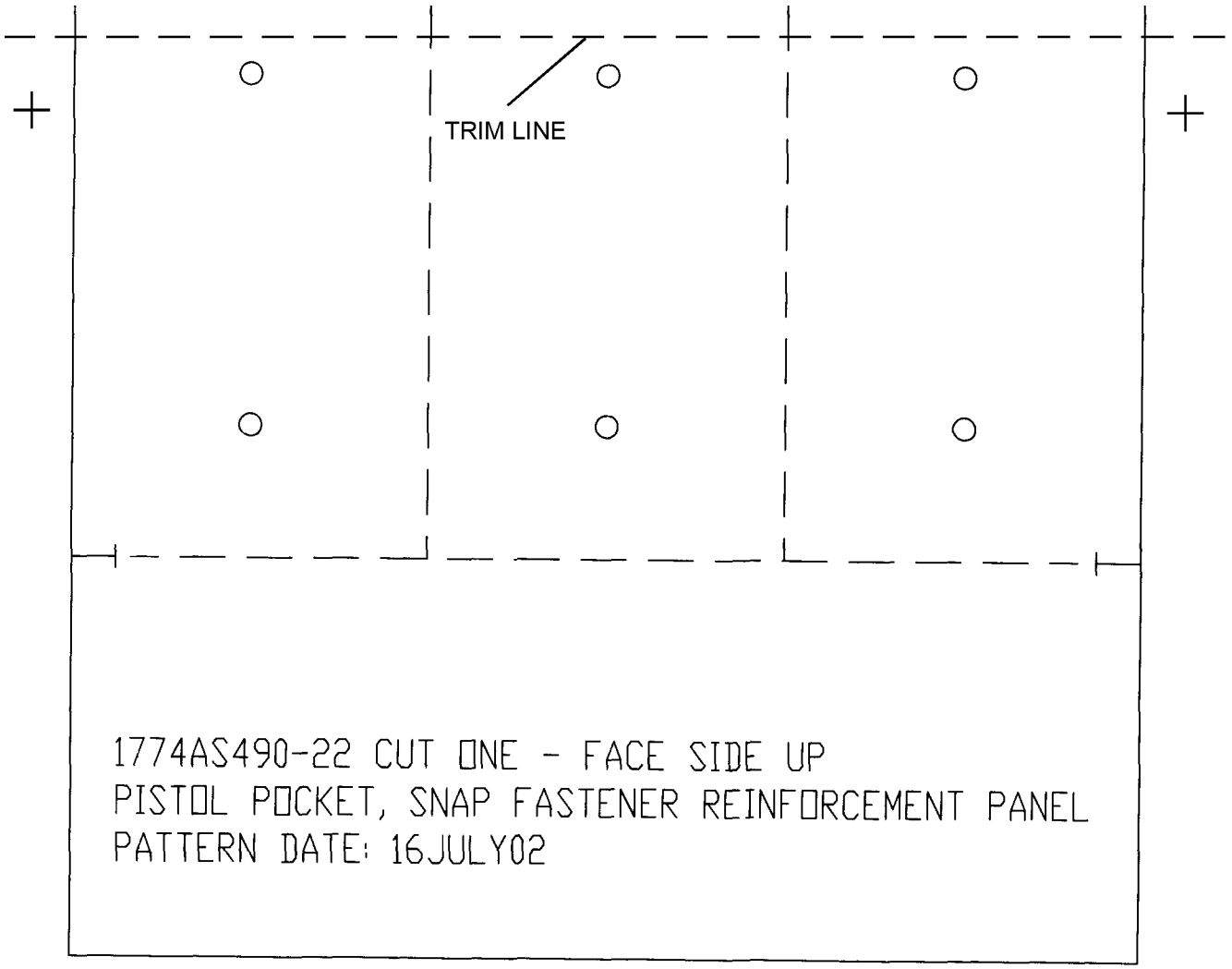

06034c02

Figure 6-36. Pistol Pocket Snap Fastener Reinforcement Panel Pattern (Sheet 2 of 2)

6-96. Fabrication of CBR Vest Snap Fastener Panel. (Figure 6-37)

NOTE

All stitching shall be in accordance with ASTM-D-6193. Stitches per inch shall be 7 to 10 with 3/4-inch backstitching or overstitching unless otherwise stated. All nylon material will be sear cut. Position all patterns with the warp direction of the fabric. Edge stitching shall be 1/8 inch from edge unless otherwise stated.

1. Place pistol pocket vest snap fastener panel front pattern (Figure 6-38) onto nylon fabric, mark all points, sew line edges and cut out the panel. Turn panel over, position snap fastener panel front pattern on fabric, and mark snap fastener panel location sew lines.

2. Place pistol pocket vest snap fastener pattern (Figure 6-39) on Herculite fabric, trace and cut out the panel.

3. Lay snap fastener panel fabric onto the snap fastener front panel nylon fabric within the sew lines indicated and sew in place.

4. All four sides of the cut edge fabric of the snap fastener panel front shall be folded inboard 3/4 inch, covering all raw edges of the snap fastener panel and sewn in place.

5. With the snap fastener panel front nylon side face up, position the snap fastener panel pattern on top and mark location for the pile tape placement. Cut three pieces of two-inch pile tape 7 1/2 inches long. While sewing pile tape in place, overlap tape as indicated on snap fastener panel pattern.

6. With the two-inch pile tapes sewn, again position snap fastener panel pattern on top of pile tape, mark the 12 snap locations and punch cut holes for installation of snaps.

7. Install the 12 studs (MS27983-4) and eyelets (MS27983-3) with the studs on the pile tape side of the vest snap fastener panel.

8. Refer to ACC 616 for location and sewn placement on SV-2 vest.

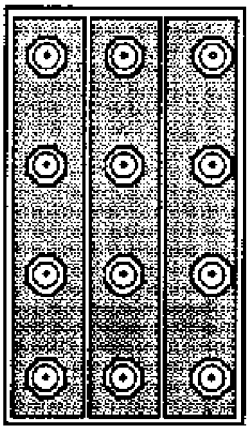

006034d

Figure 6-37. CBR Vest Snap Fastener Panel

6-97. Fabrication of MK-79 Flare Pocket. (Figure 6-40)

NOTE

Use existing flare pocket for reference if needed. Place all patterns to the fabric warp direction.

NOTE: Procedures for the construction of the pattern.
1. Print out all segments of pattern.
2. Trim all printed segments of pattern at dashed trim line ensuring alignment marks (crosses) remain on the pattern.
3. Align crosses with adjacent pattern segments and tape in place.
4. After taping, cut out pattern.

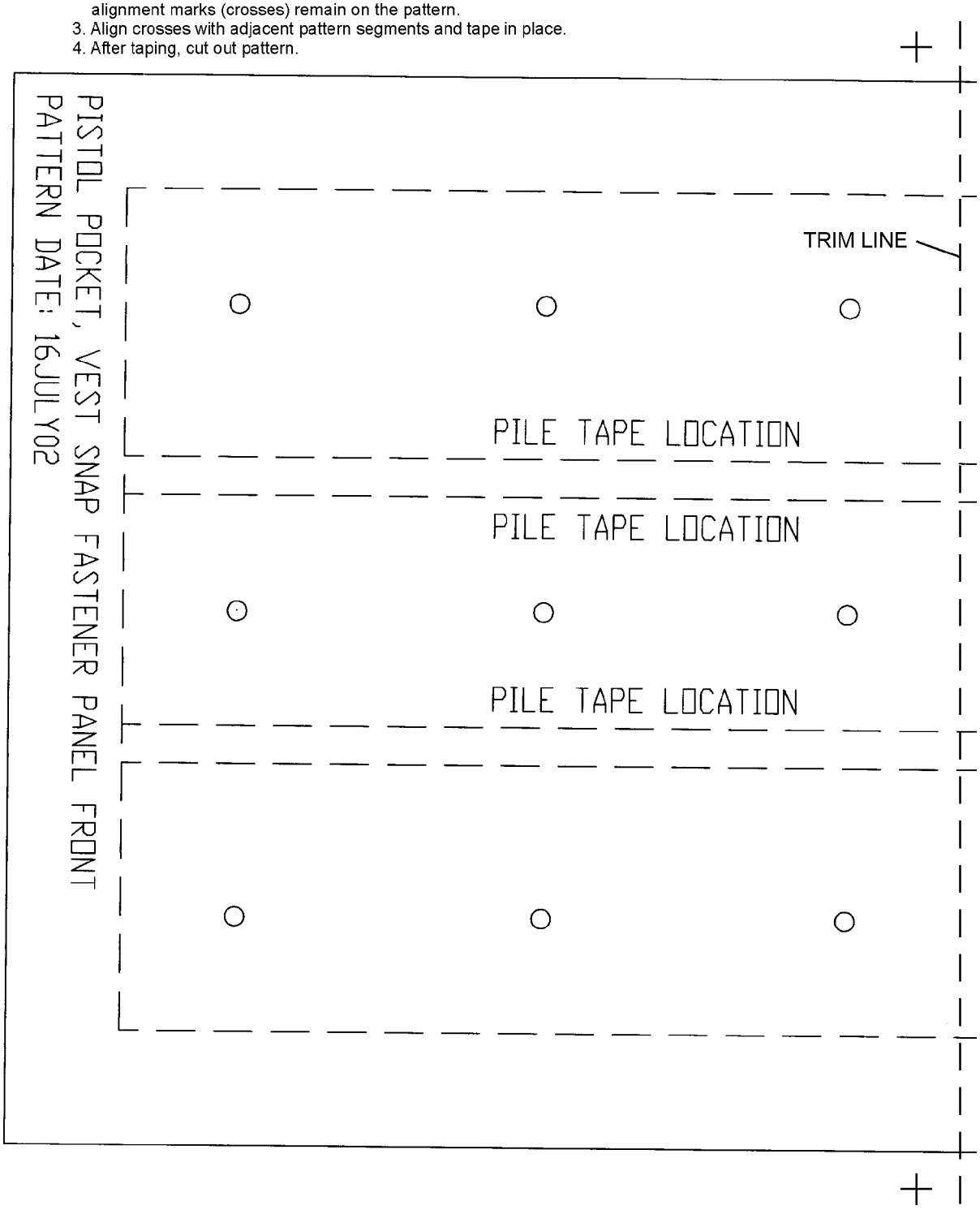

This figure has been divided into multiple segments to facilitate the printing of the pattern.

06034e01

Figure 6-38. Pistol Pocket Vest Snap Fastener Panel Front Pattern (Sheet 1 of 2)

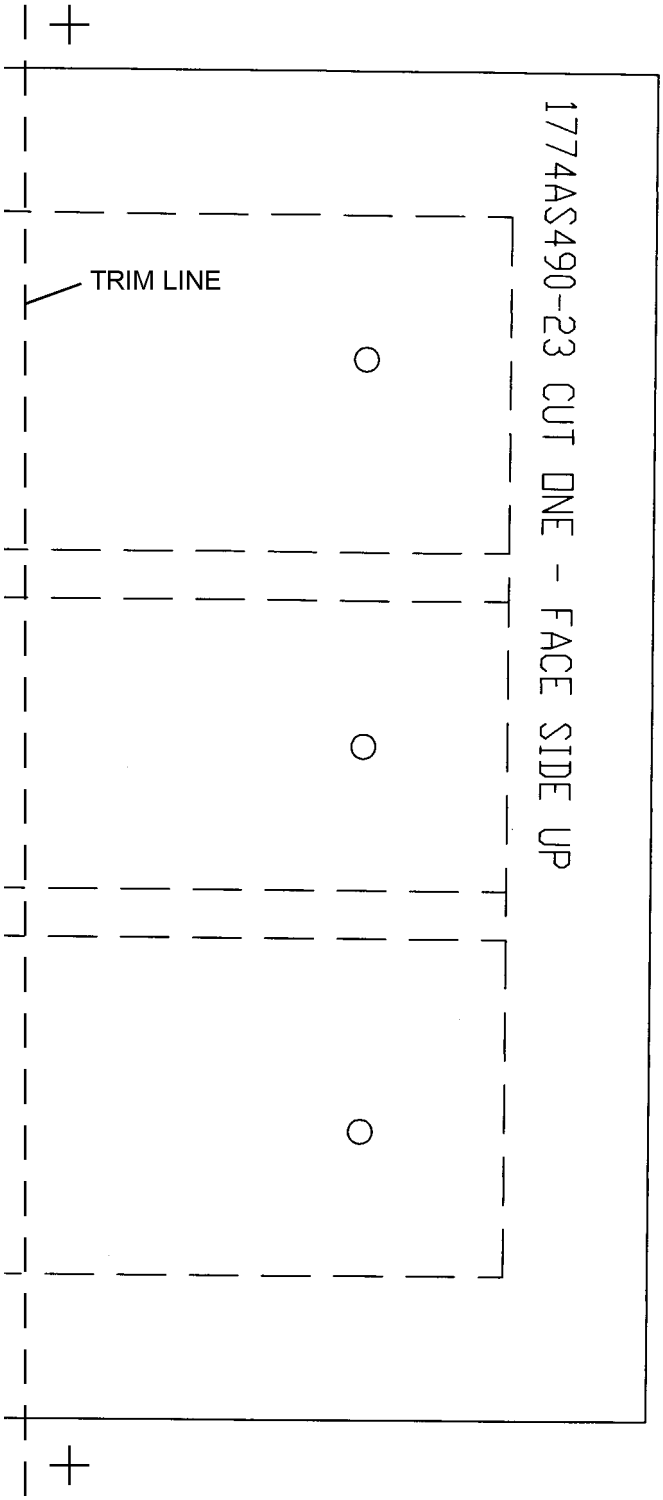

06034e02

Figure 6-38. Pistol Pocket Vest Snap Fastener Panel Front Pattern (Sheet 2 of 2)

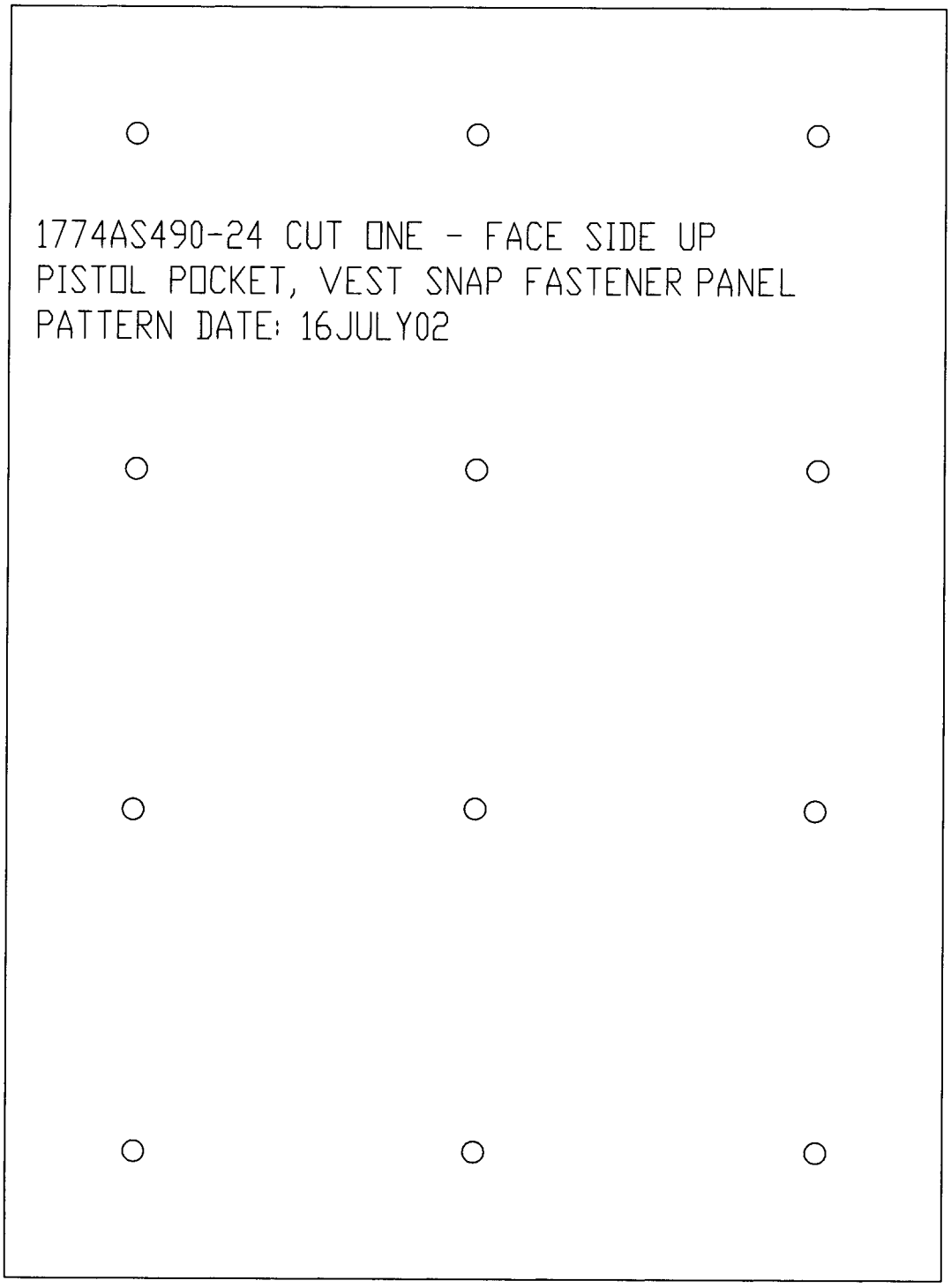

Figure 6-39. Pistol Pocket Vest Snap Fastener Patterns

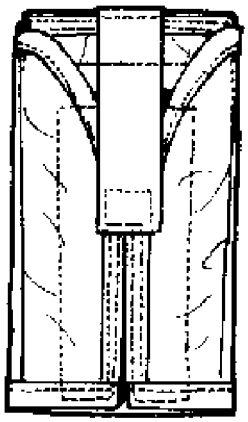

006034g

Figure 6-40. MK-79 Flare Pocket

1. Flare Pocket Main Pull Flap Panel:

a. Place flare pocket front side panel pattern (Figure 6-41) on to nylon fabric, mark outside cut lines, all alignment fold lines, all tape placements, alignment sew lines and cut out.

b. Cut 4 1/4-inch 1 inch elastic tape, position elastic flat at placement marks and sew to nylon fabric, keeping 1/4 inch from cut edges.

c. Fold front side panel in half at mid-point shown, so that tape placement marks and elastic are inside. Starting at smallest opening 3/4 inches from top, 3/8 inch from edge, sew down and around the three sides, once done turn panel completely right side out.

d. Fold small opening edges inside 3/8 inch, with elastic excess to center, top stitch entire panel using one row of stitches.

e. Using pocket pull tab pattern (Figure 6-42), manufacture pull tab using Type IV webbing. Center unsewn edge of tab onto fabric and box stitched end away from panel. Sew tab in place with 1 row of stitches at panel topstitched edge.

f. Cut 1 piece of 1-inch pile tape 3 1/4 inches long, 1 piece of 1-inch hook tape 3 1/4 inches long, and 1 piece of 2-inch pile tape 4 3/4 inches long. Sew the tapes in place, fold pull tab to the opposite side of pile tape and sew to panel using a 3/4 inch by 3/4 inch boxstitch.

g. With elastic tape facing up, fold front panel top down and bottom front up at fold line onto elastic tape. With the hook and pile tapes mating, sew folded edges in place using 1 row of stitches. Place completed panel aside until final assembly.

2. Flare Pocket Side Front and Back Panels Construction.

a. Place flare pocket side panel front pattern (Figure 6-43) onto nylon fabric. Mark outside cut lines, alignment fold lines, all tape placements and cut out. Repeat procedure for flare pocket side panel back pattern (Figure 6-44).

b. With right sides in, place side front and back panels on top of each other. Starting at edge turn in flap, 1/4 inch from edge sew panels together and completely turn right side out. Tuck turn in flap inboard 3/8 inch and top stitch complete panel.

c. Place flare pocket reinforcement panel pattern (Figure 6-45) onto the Herculite fabric, mark outside lines, alignment sew, lines and cut out. Position side panel front side up. Place reinforcement panel onto side panel at points indicated and sew into place.

d. Cut out two pieces, of 1 inch hook tape 4 3/4 inches long, and sew into place onto side panel at locations shown.

e. Turn side panel over with hook tape and Herculite fabric down. Cut 2-inch pile tape 5 1/2 inches long and sew into place sew, flap fold lines into place using one row of stitches.

f. Using the side panel back pattern, position on top of pile tape, mark snap fastener locations. Punch cut, three holes, install socket P/N MS27983-2 to pile side of tape. Ensure two top lock lugs are towards top and one bottom lock lug towards bottom. Set cap MS27983-1 to sockets.

3. Final Assembly.

a. Layout completed side panel with hook tape facing up. Place completed front side panel with the elastic tape facing up on top of reinforcement panel.

b. Position sewn fold lines of front side panel approximately 3/8 inch above, below, and sides centered around reinforcement panel. Sew all 4 edges of front side panel to side panel staying 1/8 inch inboard on reinforcement panel with two rows of stitches side by side.

c. Install size 00 grommet in the completed pocket where marked.

d. Refer to ACC 616 for placement of flare pocket on SV-2 vest snap panel.

NOTE: Procedures for the construction of the pattern.
1. Print out all segments of pattern.
2. Trim all printed segments of pattern at dashed trim line ensuring alignment marks (crosses) remain on the pattern.
3. Align crosses with adjacent pattern segments and tape in place.
4. After taping, cut out pattern.

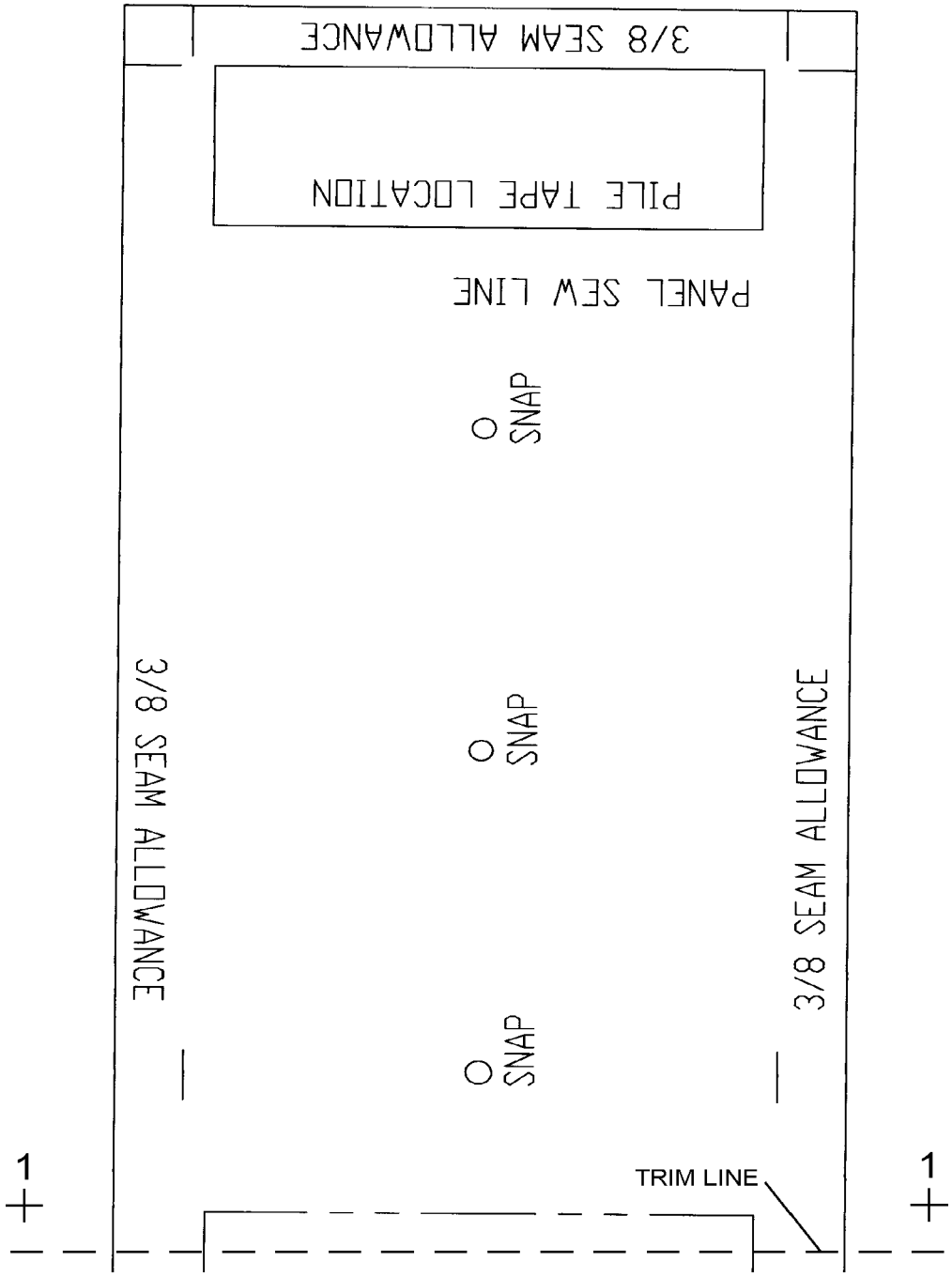

This figure has been divided into multiple segments to facilitate the printing of the pattern.

06034h01

Figure 6-41. Flare Pocket Front Side Panel Pattern (Sheet 1 of 5)

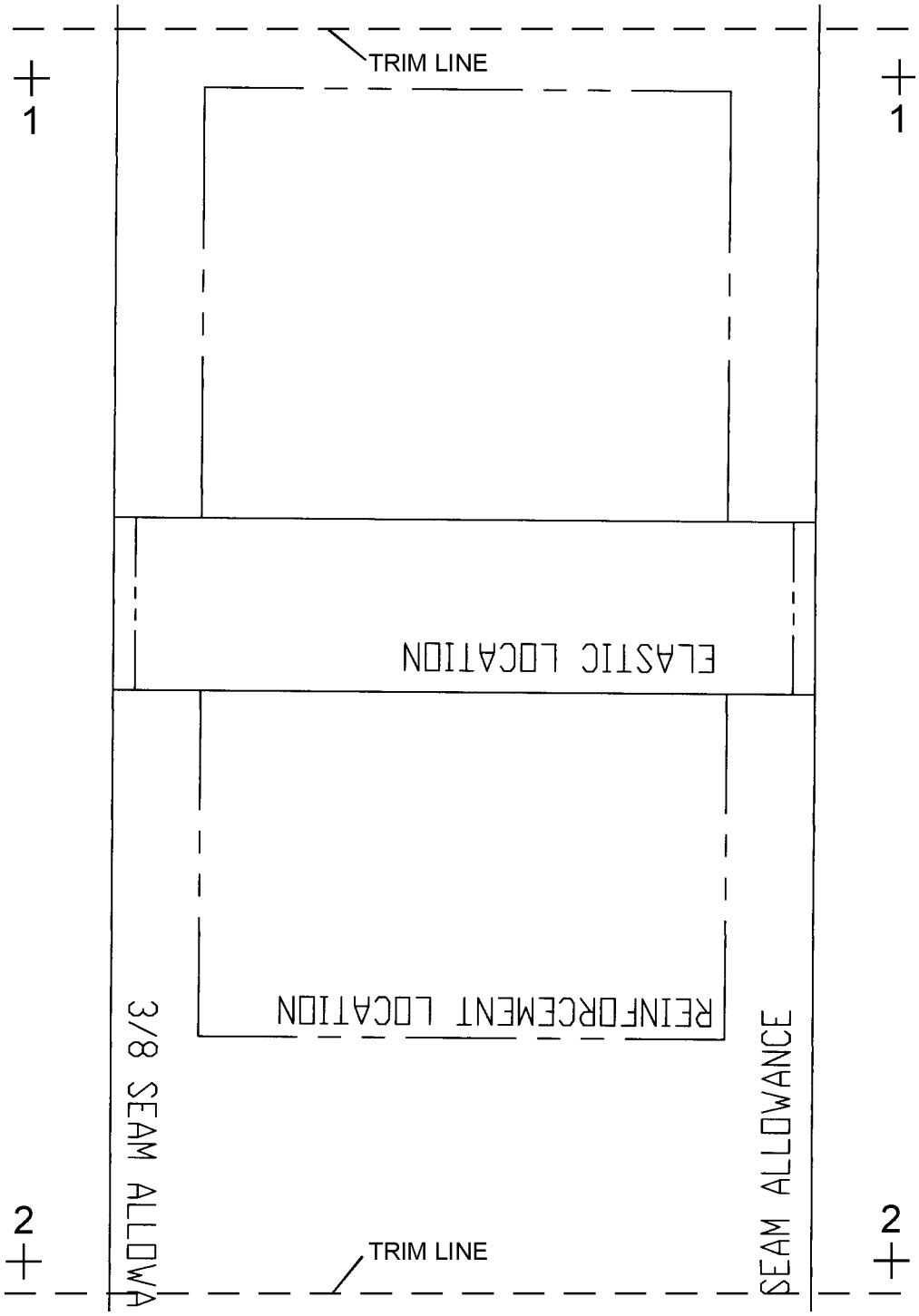

Figure 6-41. Flare Pocket Front Side Panel Pattern (Sheet 2 of 5)

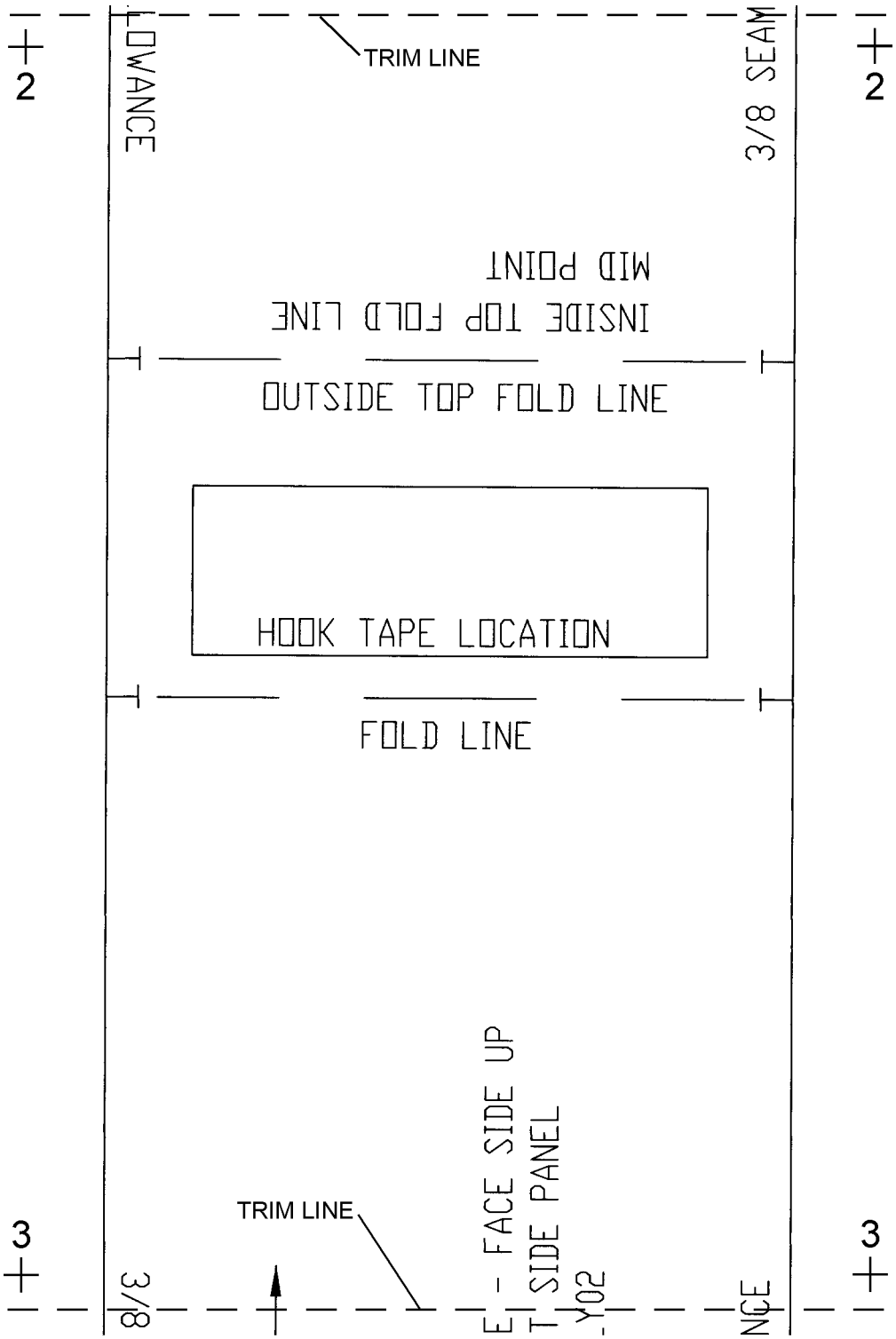

Figure 6-41. Flare Pocket Front Side Panel Pattern (Sheet 3 of 5)

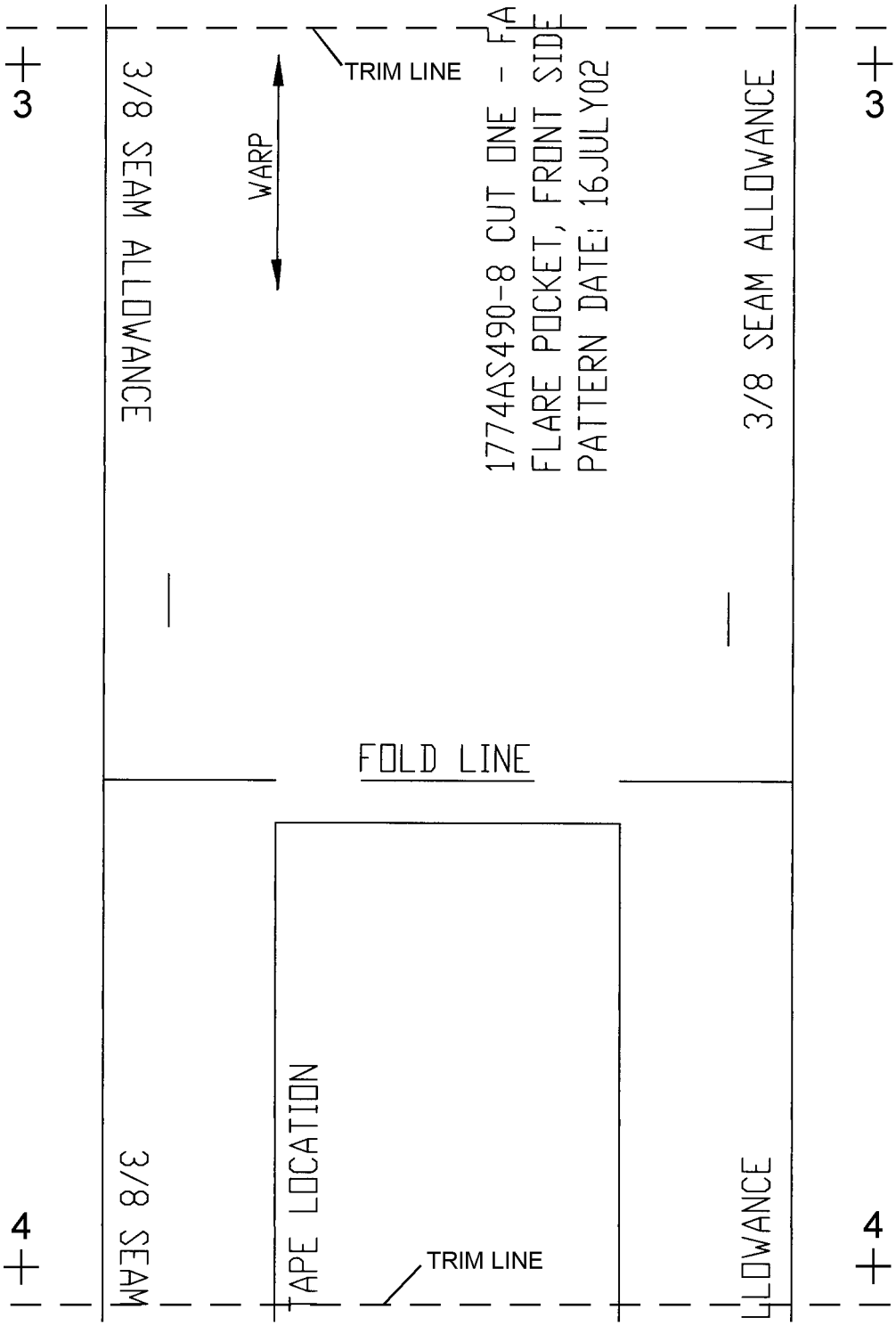

Figure 6-41. Flare Pocket Front Side Panel Pattern (Sheet 4 of 5)

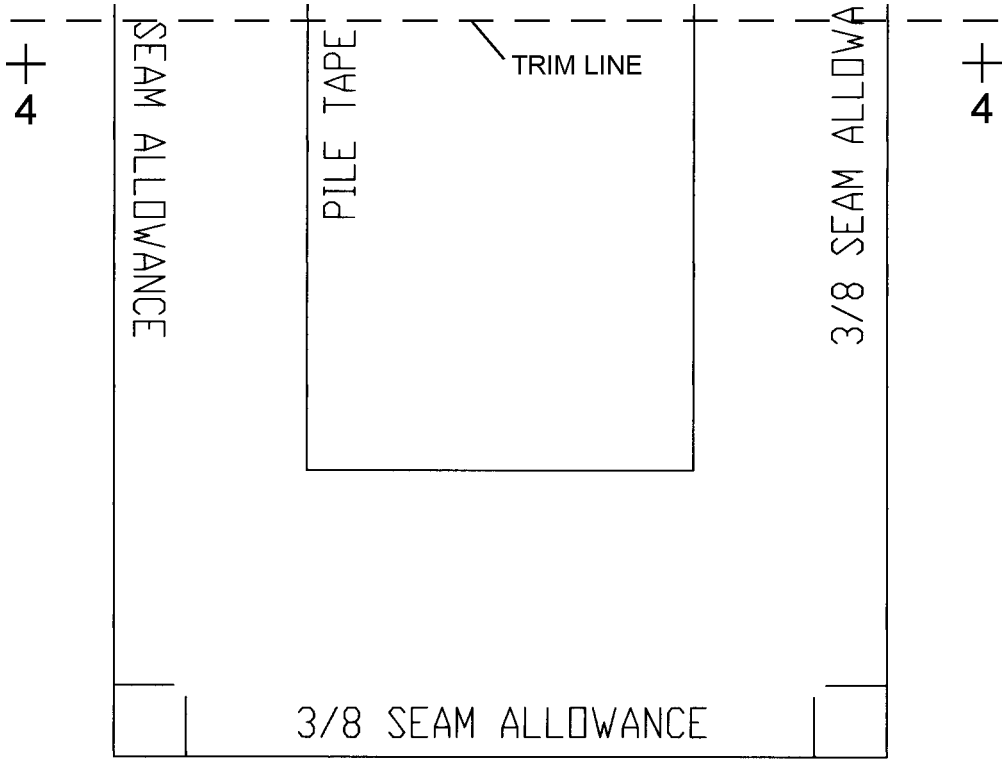

Figure 6-41. Flare Pocket Front Side Panel Pattern (Sheet 5 of 5)

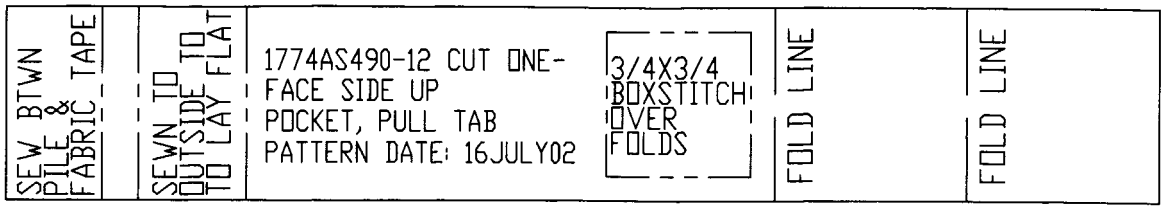

Figure 6-42. Pocket Pull Tab Pattern

NOTE: Procedures for the construction of the pattern.
1. Print out all segments of pattern.
2. Trim all printed segments of pattern at dashed trim line ensuring alignment marks (crosses) remain on the pattern.
3. Align crosses with adjacent pattern segments and tape in place.
4. After taping, cut out pattern.

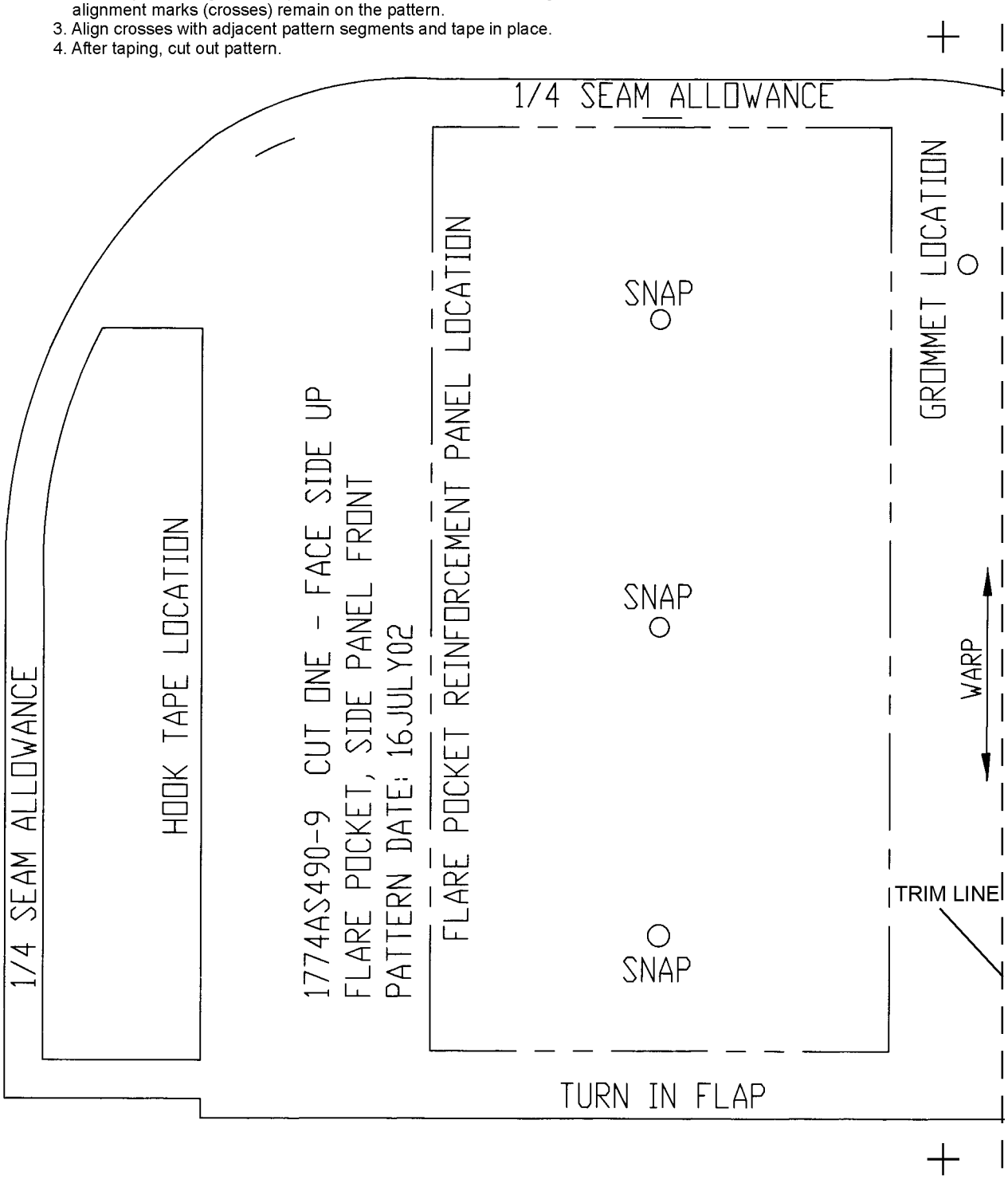

This figure has been divided into multiple segments to facilitate the printing of the pattern.

Figure 6-43. Flare Pocket Side Panel Front Pattern (Sheet 1 of 2)

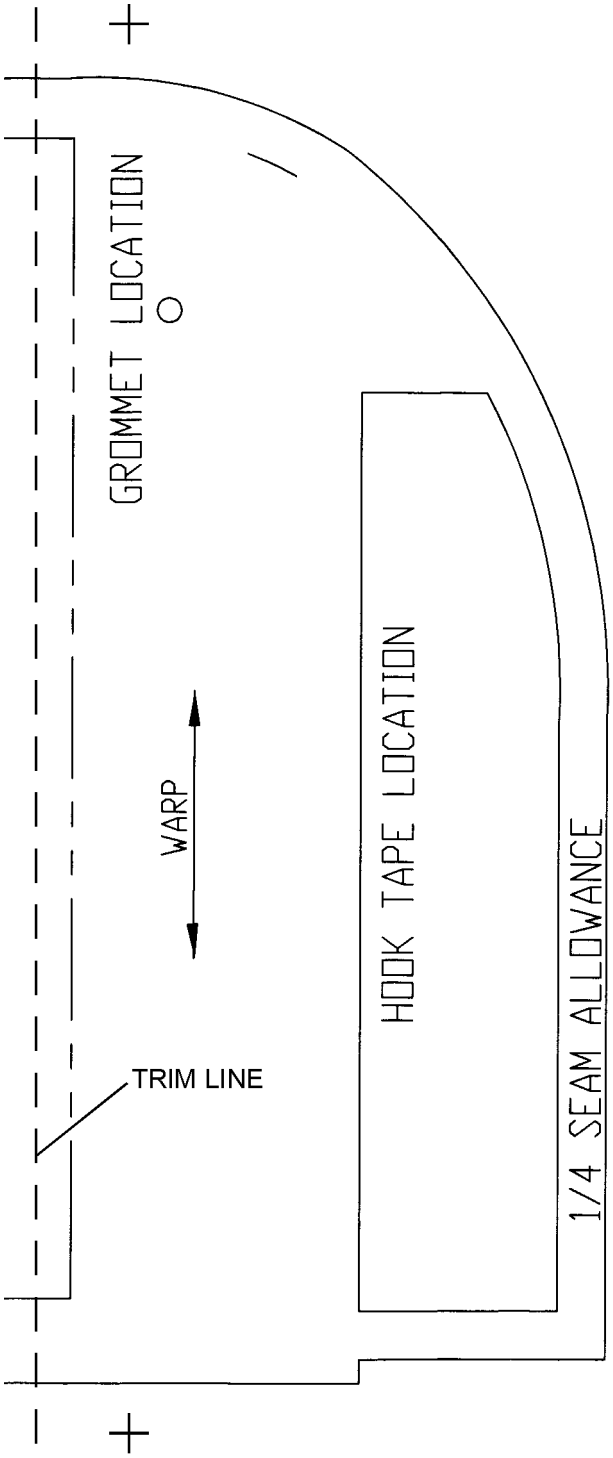

Figure 6-43. Flare Pocket Side Panel Front Pattern (Sheet 2 of 2)

NOTE: Procedures for the construction of the pattern.
1. Print out all segments of pattern.
2. Trim all printed segments of pattern at dashed trim line ensuring alignment marks (crosses) remain on the pattern.
3. Align crosses with adjacent pattern segments and tape in place.
4. After taping, cut out pattern.

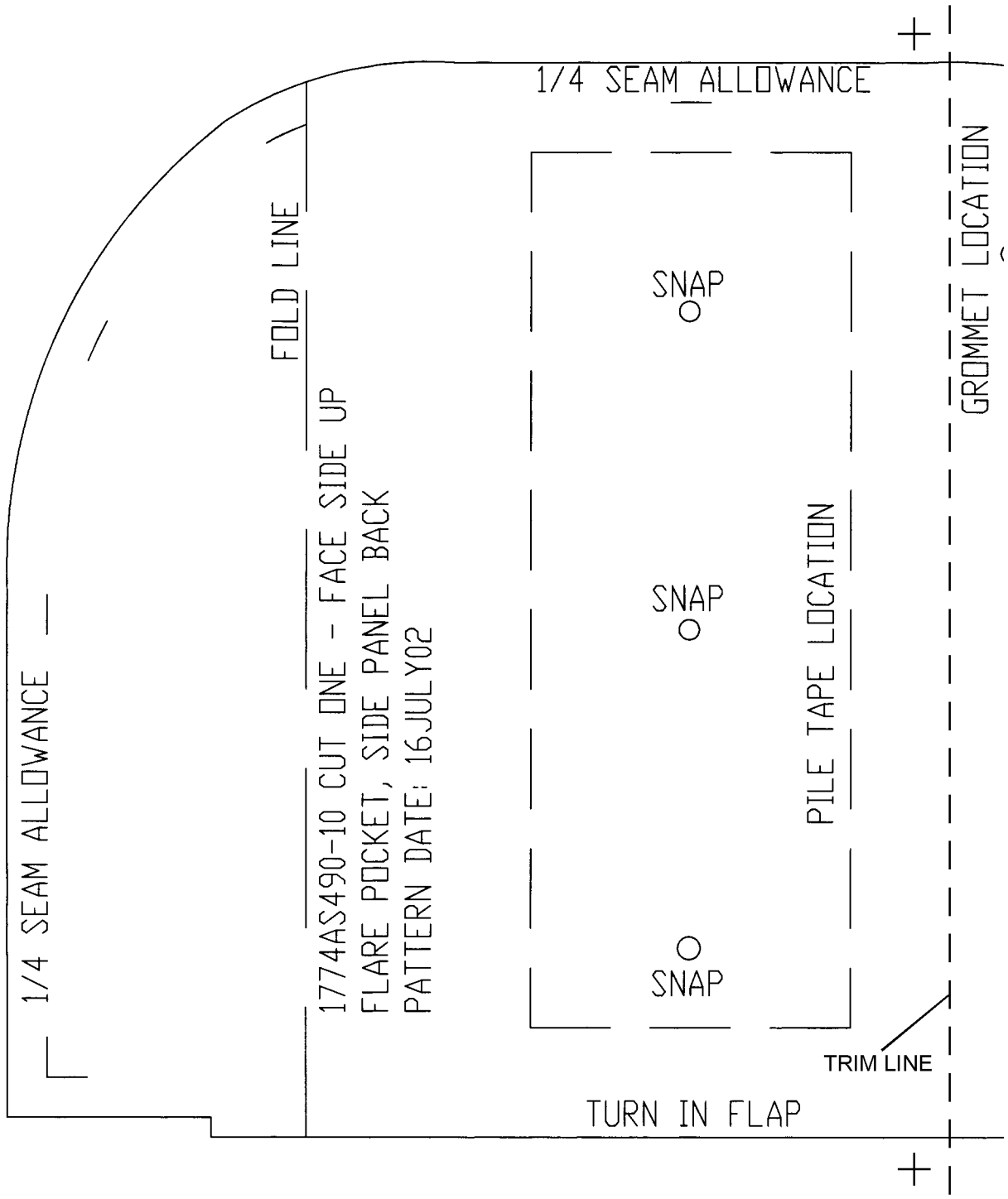

This figure has been divided into multiple segments to facilitate the printing of the pattern.

Figure 6-44. Flare Pocket Side Panel Back Pattern (Sheet 1 of 2)

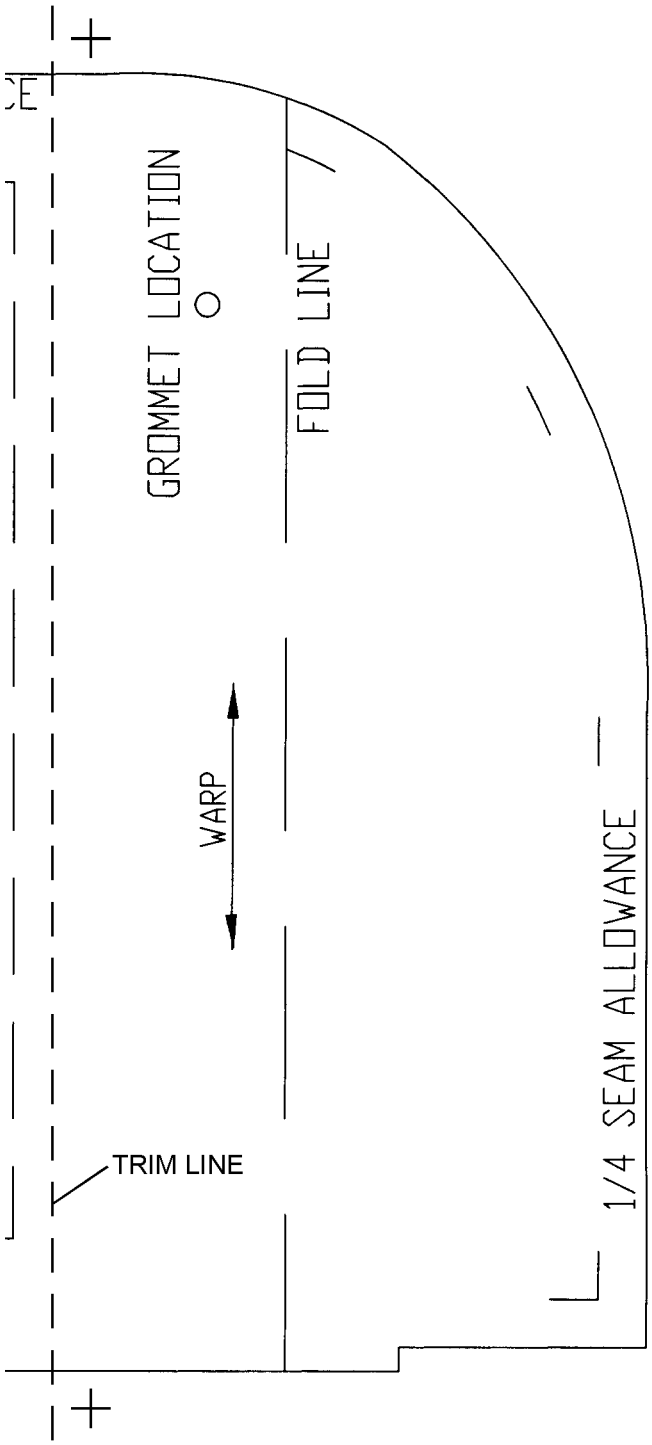

Figure 6-44. Flare Pocket Side Panel Back Pattern (Sheet 2 of 2)

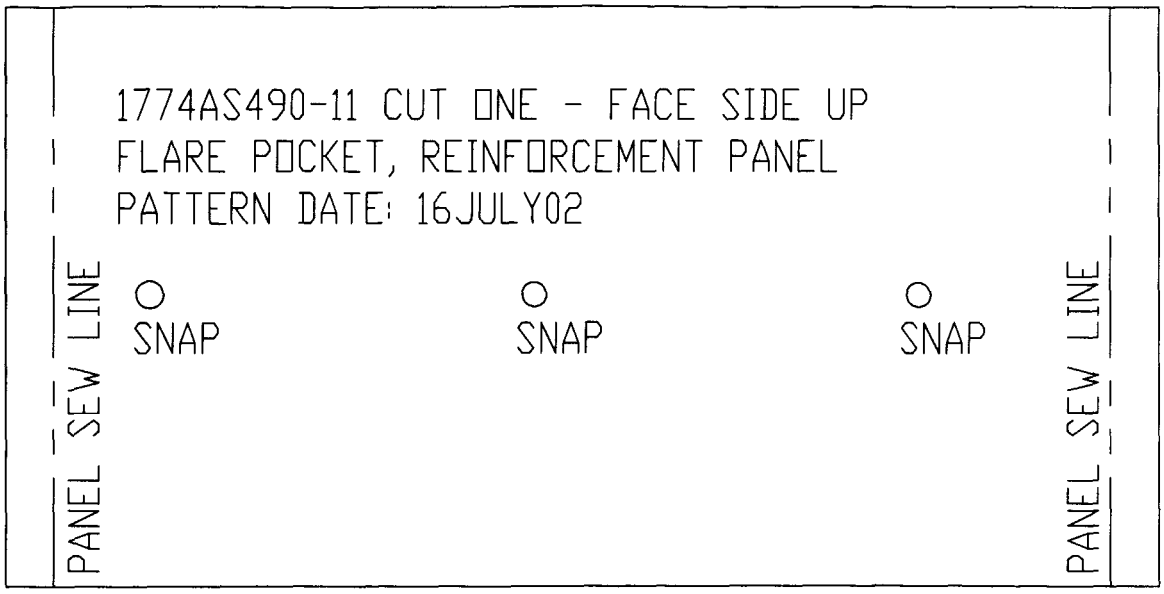

Figure 6-45. Flare Pocket Reinforcement Panel Pattern

6-98. Fabrication of Survival Knife Pocket. (Figure 6-46)

NOTE

Knife scabbard will be salvaged from NRFI knife pocket or SV-2 vest pocket. If necessary knife scabbard provided with knife will be modified by careful removal of stone pocket and flap. Substitute 7-inch hook tape for 7-inch pile tape if incorporating ACC-639 for the SRU-40 HABD.

1. Place survival knife pocket main panel pattern (Figure 6-47) onto nylon fabric with the face side up, mark all points, sew line edges, locations and cut out. Turn main panel over with back-up, position main panel pattern with back up onto fabric, mark hook tape location and main pile tape locations.

2. Place survival knife pocket reinforcement panel pattern (Figure 6-48) onto Herculite fabric, mark cut lines and cut out. Turn main panel over with the face side up and sew Herculite panel in place.

3. Place survival knife pocket inside front flap panel and survival knife pocket inside back flap panel patterns (Figure 6-49 and Figure 6-50) onto nylon fabric, mark hook tape locations and pile tape locations and cut out.

4. Position main panel with back facing up, place inside back flap panel with hook tape points towards fabric onto corresponding end, and place inside front flap panel with pile tape points towards fabric onto opposite end. Sew inside front and back flap panels to main panel, leaving openings on each panel towards center fold line, that will be needed to turn each panel right side out, when sewing is finished. Turn panel right side out.

5. After turning right side out, ensure all panel corners are fully turned out and tape locations are visible, top stitch all edges and openings with one row of stitches.

6. Using pocket pull tab pattern (Figure 6-42) manufacture pull-tab using Type IV webbing. Center unsewn edge of tab onto small end placement marks with 1/2 inch of webbing onto fabric and boxstitched end away from panel. Sew tab in place with one row of stitches at pane topstitched edge.

7. Cut 1 piece of 1-inch pile tape 2 1/2 inches long, sew tape in place over sewn pull tab edge. Fold pull tab to opposite side of pile tape and sew onto nylon panel, using a 3/4 inch by 3/4 inch boxstitch.

8. Cut 2 pieces of 1-inch pile tape 3 3/4 inches long, cut 2 pieces of 1-inch hook tape 3 3/4 inches long, cut 1 piece of 1-inch hook tape 2 1/2 inches long, and 1 piece of 2-inch pile tape 7 inches long. Sew hook and pile tapes on respective locations.

9. With 7-inch pile tape (hook tape) face up, place main panel pattern with back up onto main panel centered on pile tape, and mark snap fastener locations. Punch out 4 holes, install sockets P/N MS27983-2 to pile side of tape. Ensure two lock lugs are towards centerfold line and remaining two lock lugs are towards top of knife pocket, set cap MS27983-1 to sockets.

10. Fold main panel at center with main socket pile tape inside, match corners of inside back flap panel and inside front flap panel. Sew sides together using rows of stitches side by side 1/4 inch from edges and double backstitch each panel end.

11. Turn main panel right side out, fold the 3 3/4 inch hook tapes in board with the full width and length of tape facing up. At the folded line created, topstitch edge in place along the full length of hook tape. Set "00" grommet at location above the hook tape.

12. Insert knife scabbard for fit, if needed trim top of scabbard leather and sew in place using one row of stitches as shown on main panel pattern.

13. Attach knife pocket onto bottle pocket in accordance with ACC 616.

006034n

Figure 6-46. Survival Knife Pocket

NOTE: Procedures for the construction of the pattern.
1. Print out all segments of pattern.
2. Trim all printed segments of pattern at dashed trim line ensuring alignment marks (crosses) remain on the pattern.
3. Align crosses with adjacent pattern segments and tape in place.
4. After taping, cut out pattern.

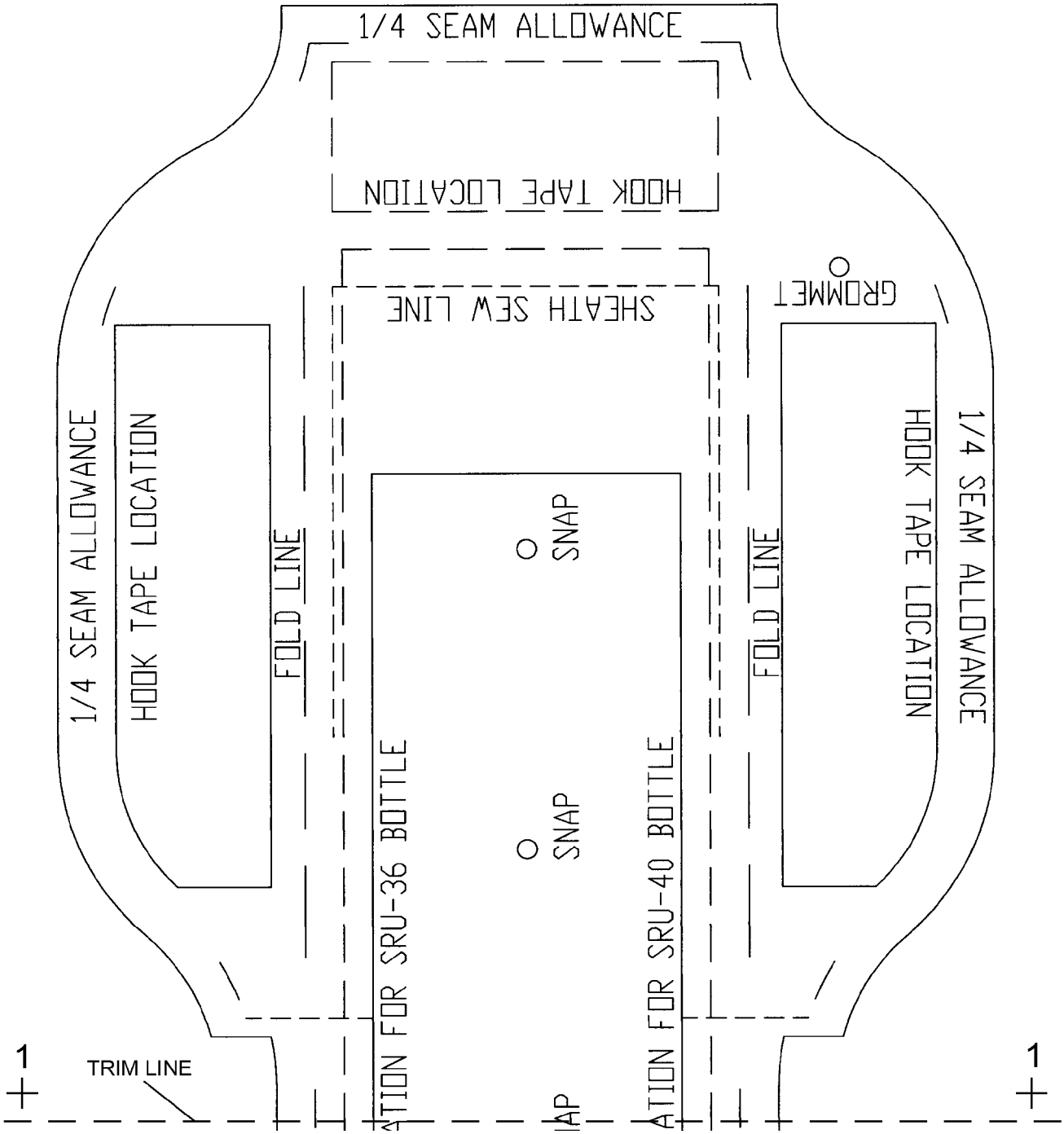

This figure has been divided into multiple segments to facilitate the printing of the pattern.

Figure 6-47. Survival Knife Pocket Main Panel Pattern (Sheet 1 of 4)

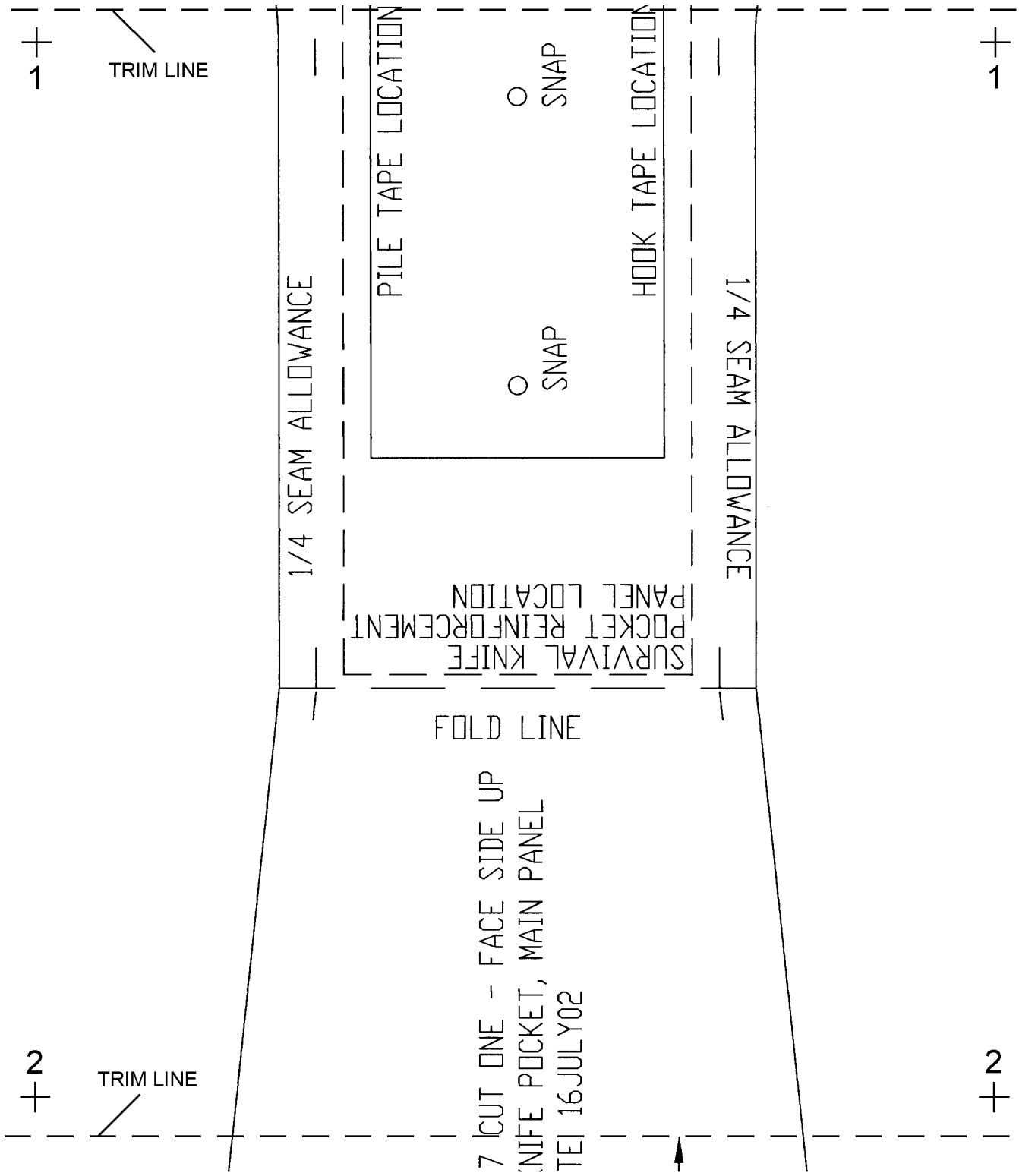

Figure 6-47. Survival Knife Pocket Main Panel Pattern (Sheet 2 of 4)

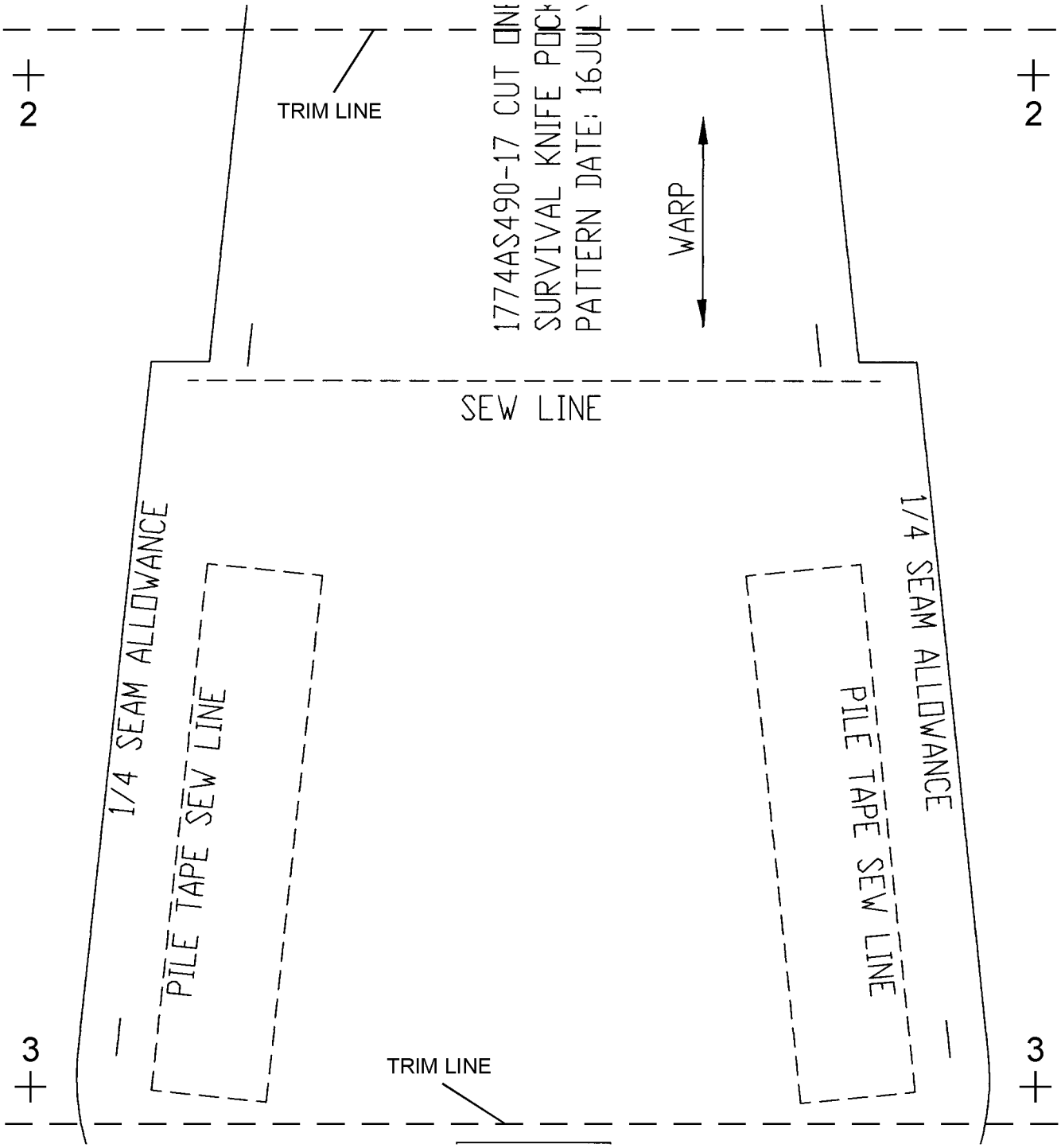

Figure 6-47. Survival Knife Pocket Main Panel Pattern (Sheet 3 of 4)

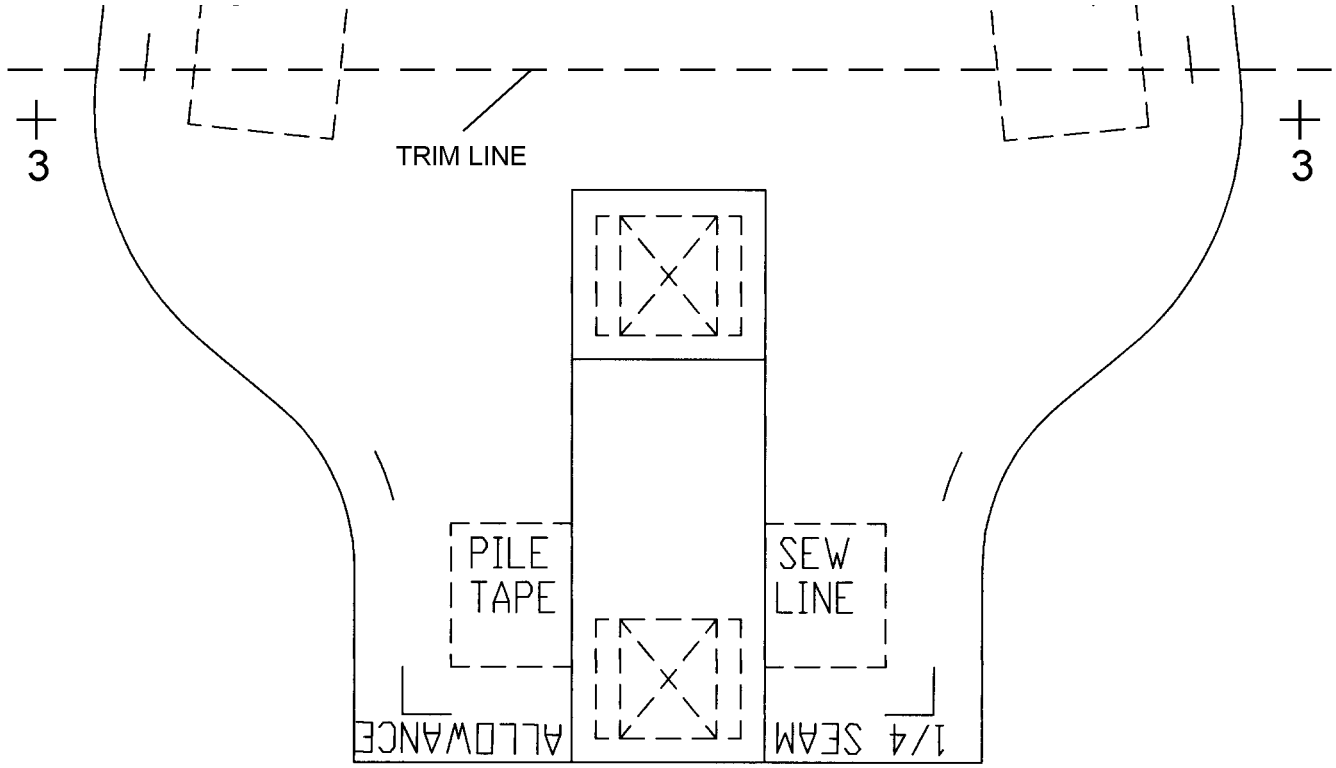

Figure 6-47. Survival Knife Pocket Main Panel Pattern (Sheet 4 of 4)

NOTE: Procedures for the construction of the pattern.
1. Print out all segments of pattern.
2. Trim all printed segments of pattern at dashed trim line ensuring alignment marks (crosses) remain on the pattern.
3. Align crosses with adjacent pattern segments and tape in place.
4. After taping, cut out pattern.

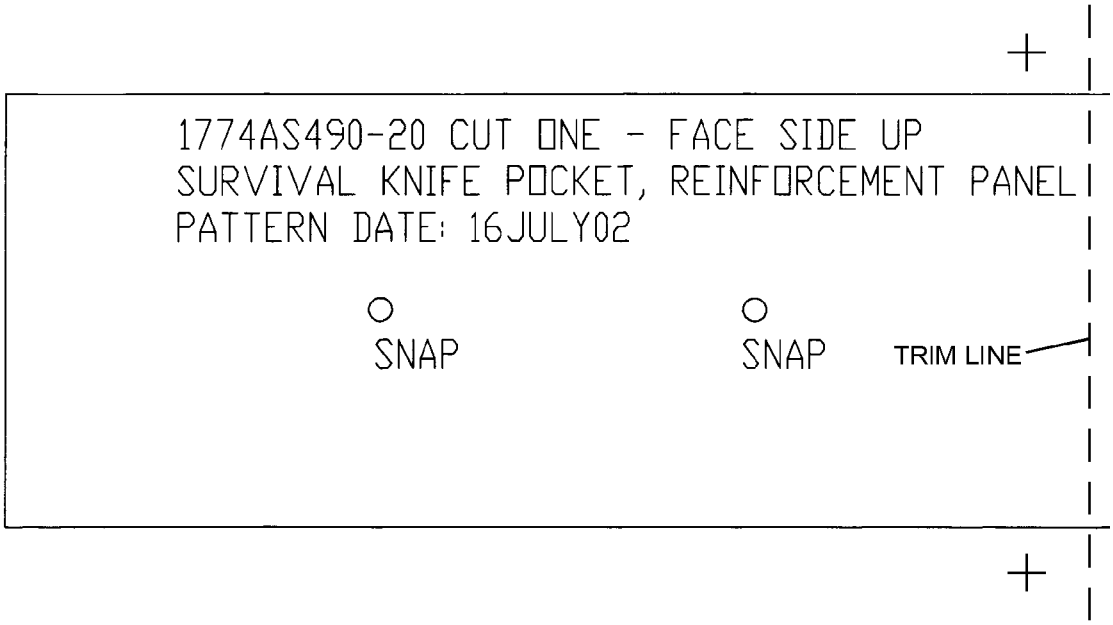

This figure has been divided into multiple segments to facilitate the printing of the pattern.

Figure 6-48. Survival Knife Pocket Reinforcement Panel Pattern (Sheet 1 of 2)

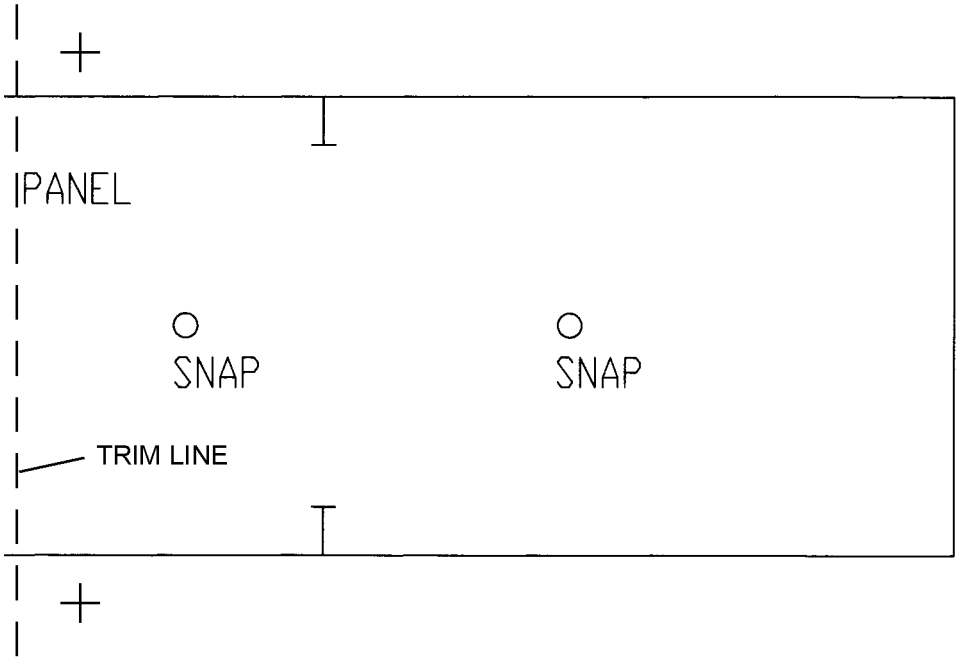

Figure 6-48. Survival Knife Pocket Reinforcement Panel Pattern (Sheet 2 of 2)

NOTE: Procedures for the construction of the pattern.
1. Print out all segments of pattern.
2. Trim all printed segments of pattern at dashed trim line ensuring alignment marks (crosses) remain on the pattern.
3. Align crosses with adjacent pattern segments and tape in place.
4. After taping, cut out pattern.

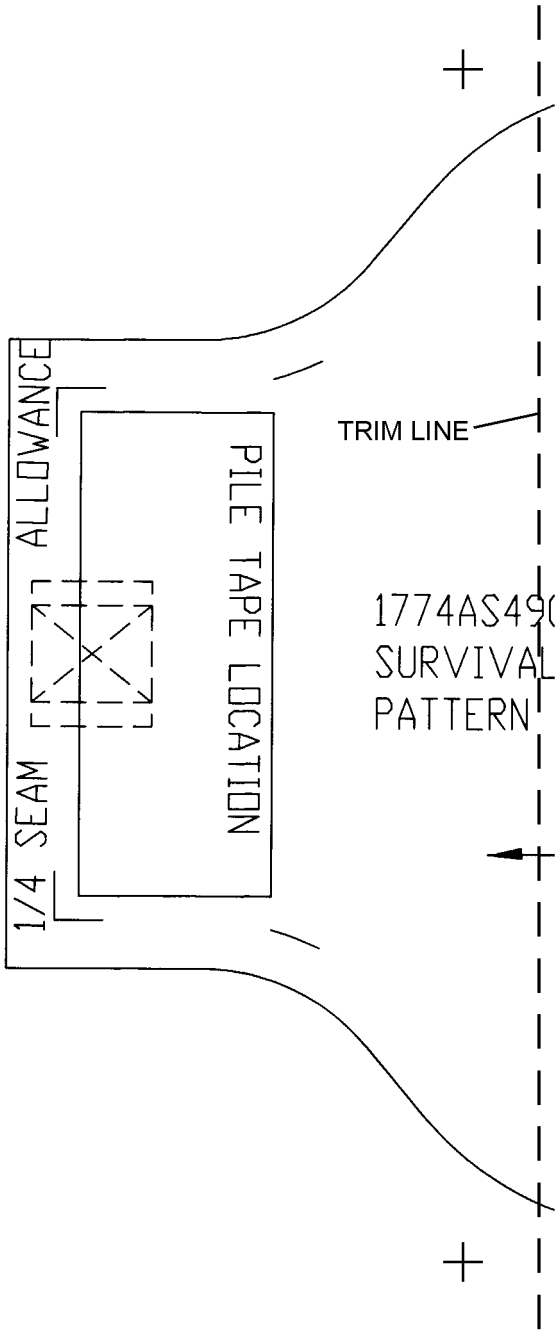

This figure has been divided into multiple segments to facilitate the printing of the pattern.

Figure 6-49. Survival Knife Pocket Inside Front Panel Pattern (Sheet 1 of 2)

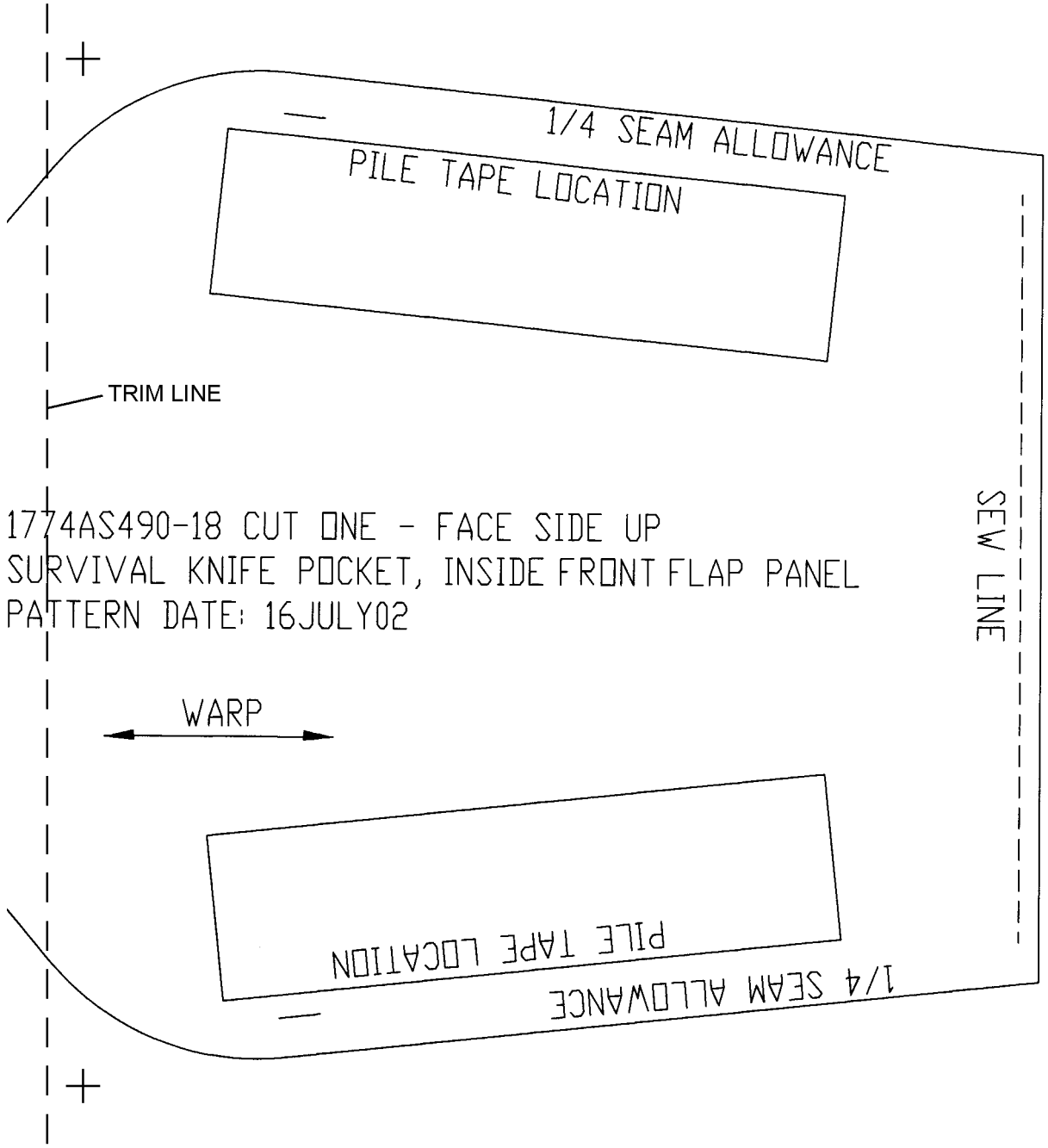

Figure 6-49. Survival Knife Pocket Inside Front Panel Pattern (Sheet 2 of 2)

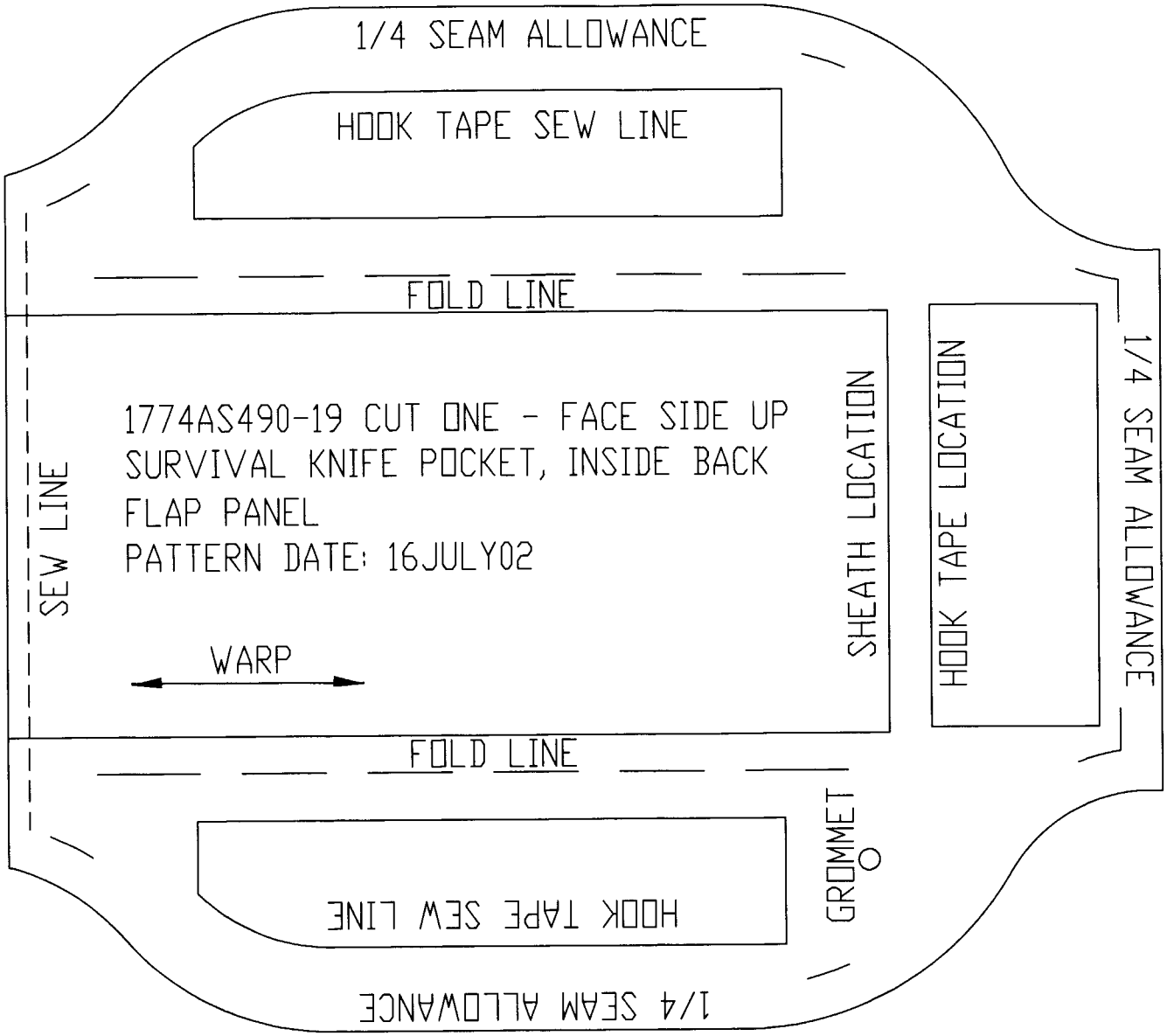

Figure 6-50. Survival Knife Pocket Inside Back Flap Panel Pattern

6-99. Fabrication of Pusher Fan Pocket. (Figure 6-51)

NOTE

Identify inside and outside of panels when marking and sewing.

1. Identify pusher fan main panel pattern (Figure 6-52), pusher fan side panel pattern (Figure 6-53), receiving bracket panel pattern (Figure 6-54), and pusher fan inlet reinforcement panel pattern (Figure 6-55). When making reinforcement panel pattern, cut out sew line circle.

2. Lay main side and reinforcement panel patterns on nylon fabric, mark all alignment points, slide fastener area, fold lines and cut out. Lay receiving bracket panel pattern onto Herculite fabric and cut two pieces out.

3. Position side panel with outside up and place reinforcement panel on top. Align marks together and sew opening hole to side panel using two rows of stitching side by side on circle sew line.

4. Cut out center of circle, stay 1/8 inch inside of stitched line, tuck reinforcement panel fabric through opening. Completely flatten fabric against inside side panel. Sew outside circumference of circle using two rows of stitches 1/8 inch and 3/8 inch from folded edge.

5. On the outside, ensure battery pocket alignment points are visible and set panel aside for final assembly.

6. Position main panel with inside face up, at marks indicated, position slide fastener tape with pull tab down. With top stops 3/8 inch from edge of fabric, sew 9 1/4-inch slide fastener in place. Flip panel over, cut and sew entrance area fabric in place.

7. To fabricate slide fastener, proceed as follows:

a. Lay out slider (NIIN 00-252-5398) with Slider Fastener closed, measure from top stops-down 9 1/4 inch and mark for teeth length.

b. Measure another 1 inch for tape length. Cut tape at this mark and remove teeth within the 1-inch measurement.

c. Install bottom stop at bottom of tooth length.

8. Return main panel to inside face up position. Place receiving bracket panel at location shown and sew in place using 2 rows of stitching 1/8 inch and 3/8 inch in from outside cut edges. Punch cut holes for bracket rivets.

9. On main panel, at lines indicated, sew front and backsides of fabric to slide fastener gusset, using two rows of stitches side by side.

10. With main panel inside face down, position side panel outside down on top at marks indicated. Sew the panels together matching alignment marks with 2 rows of stitches side by side 3/8 inch from cut edge and 3/8 inch from ends of side panel. Hem opening edges by turning fabric under 3/8 inch and stitch 1/4 inch from folded edge.

11. If not done, manufacture battery pocket as per instructions.

12. Turn completed pusher fan pocket right side in. Position battery pocket at marks on side panel. Ensure alignment for proper position of the battery pocket and that fabric is flat while sewing. Stitch battery pocket to panel using 1 row of stitches 1/4 inch from edge.

13. Position male bracket onto main panel with lock notch opposite the pusher fan opening. Set rivets through bracket, pocket fabric and inside supports. Ensure finished rivets have no sharp edges.

14. Install bracket into receiver to ensure proper fit.

15. If needed, cut 14 1/2-inch length of 1/2 inch wide tape (Figure 6-56). Slide tape through ring of pull pin and fold in half onto itself. Fold free end 3/8 inch 2 times, sew in place using 3 rows of stitches side by side centered.

16. Position pusher fan pocket and receiver bracket on CMU-23 as described by ACC 616.

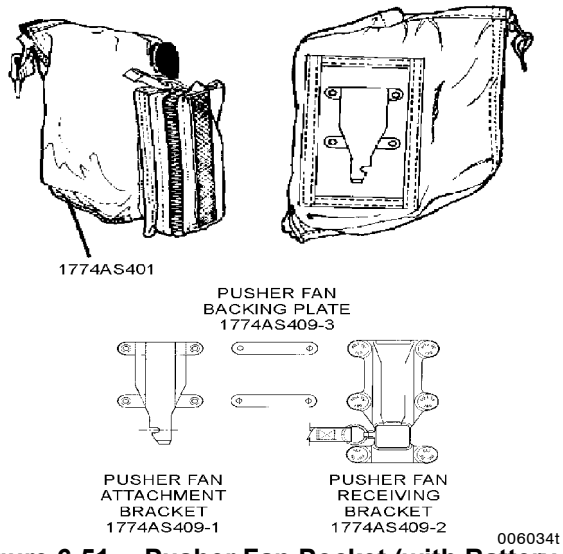

Figure 6-51. Pusher Fan Pocket (with Battery Pocket and Mounting Bracket)

NOTE: Procedures for the construction of the pattern.
1. Print out all segments of pattern.
2. Trim all printed segments of pattern at dashed trim line ensuring alignment marks (crosses) remain on the pattern.
3. Align crosses with adjacent pattern segments and tape in place.
4. After taping, cut out pattern.

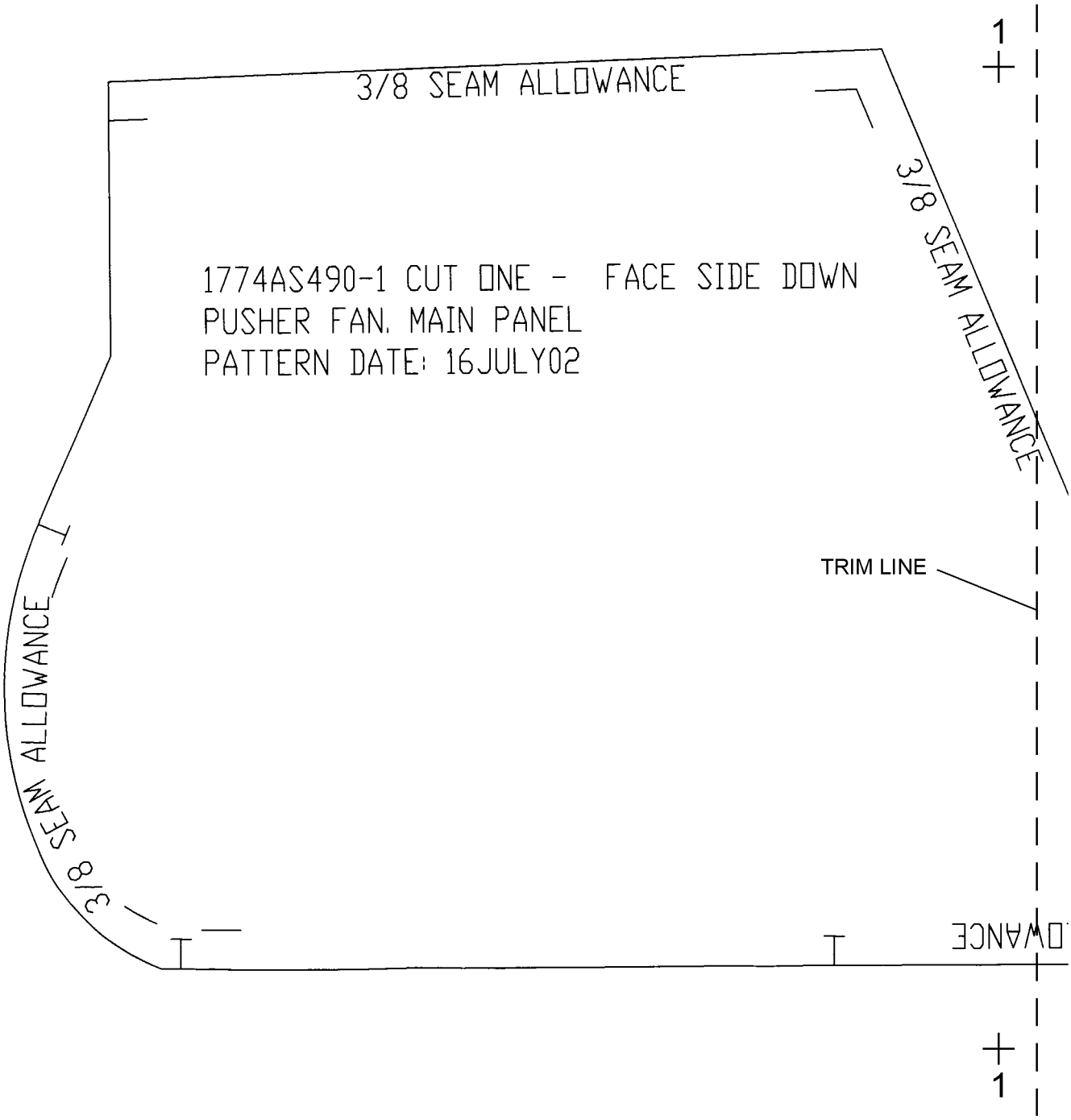

This figure has been divided into multiple segments to facilitate the printing of the pattern.

Figure 6-52. Pusher Fan Main Panel Pattern (Sheet 1 of 4)

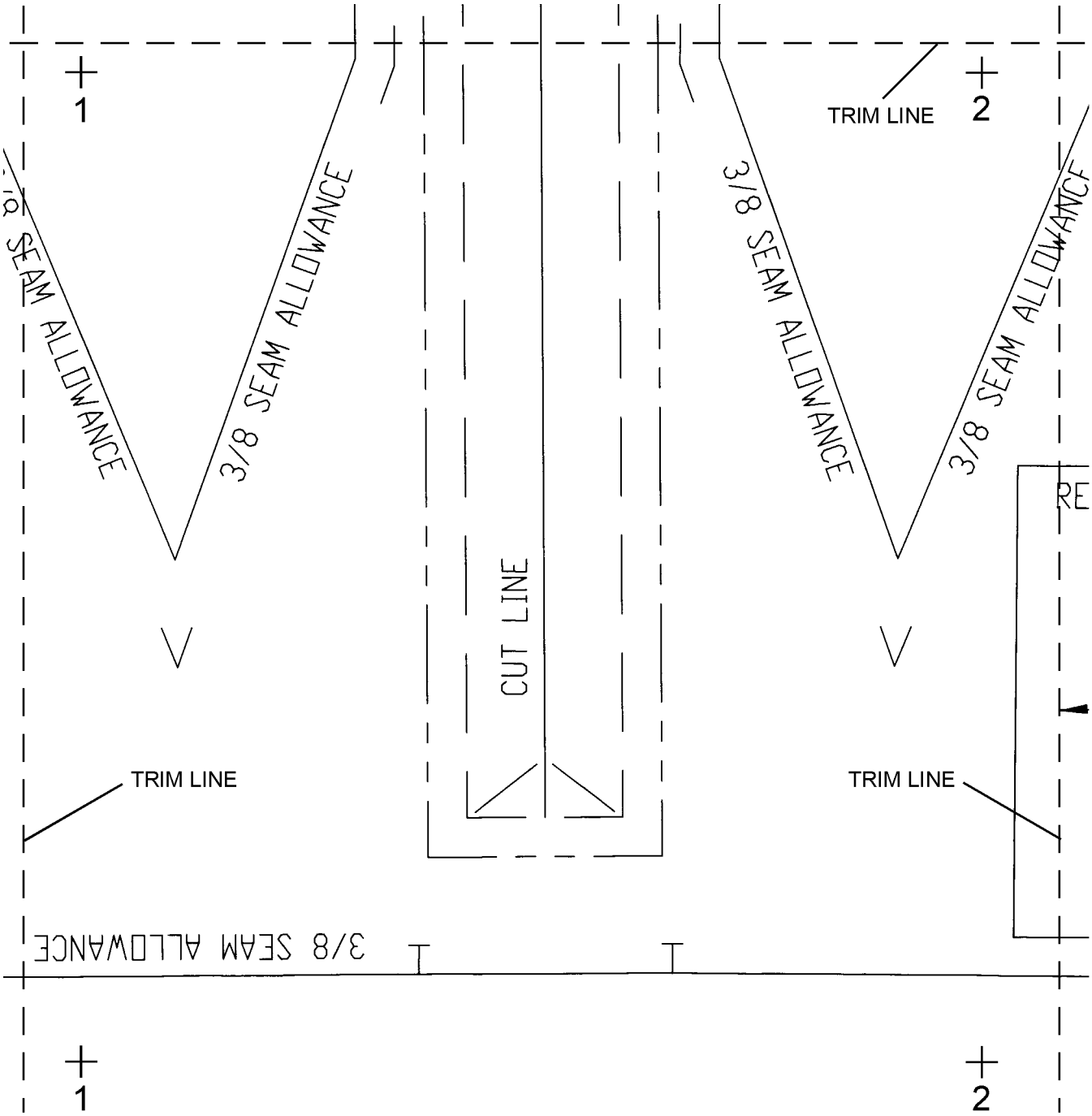

Figure 6-52. Pusher Fan Main Panel Pattern (Sheet 2 of 4)

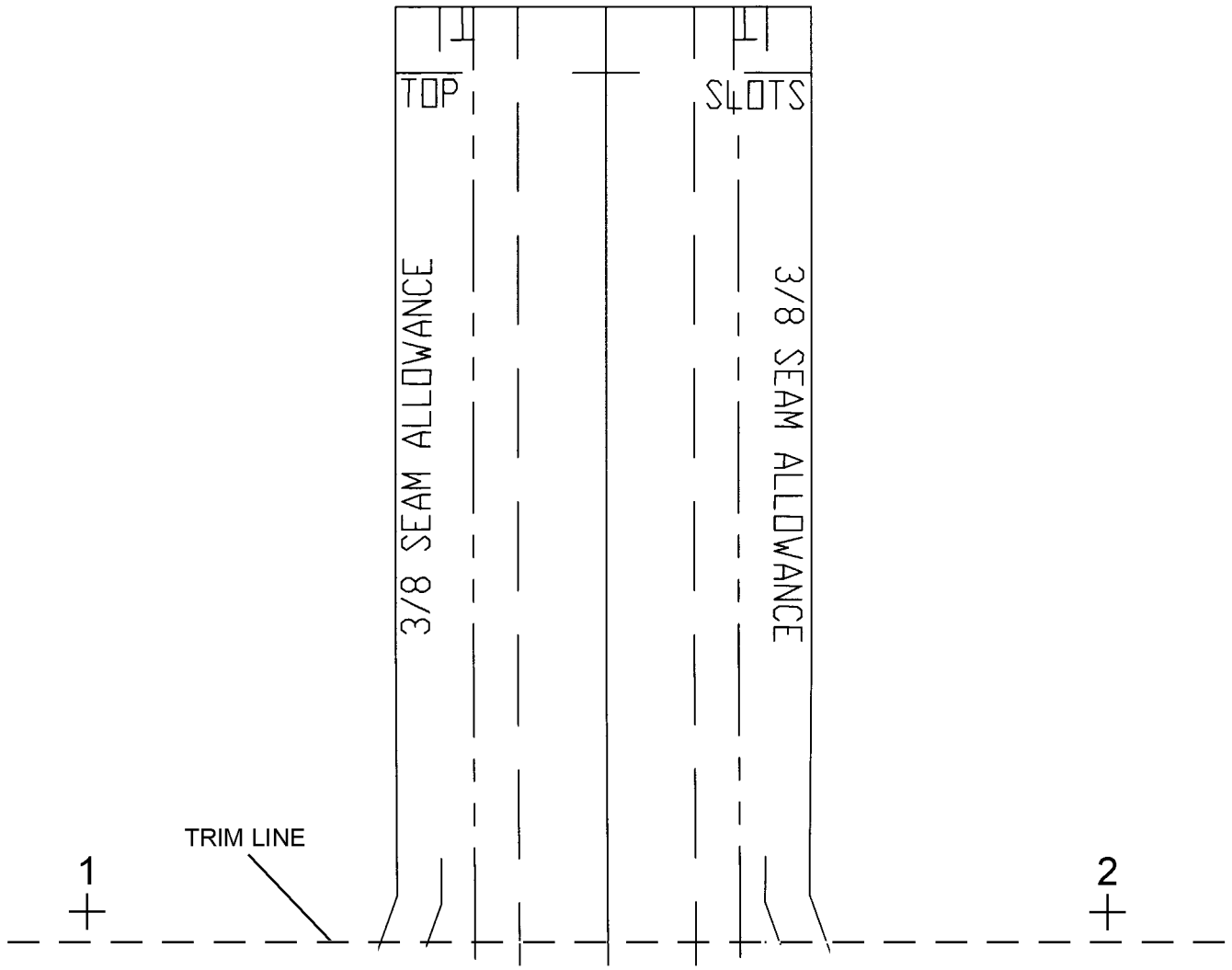

Figure 6-52. Pusher Fan Main Panel Pattern (Sheet 3 of 4)

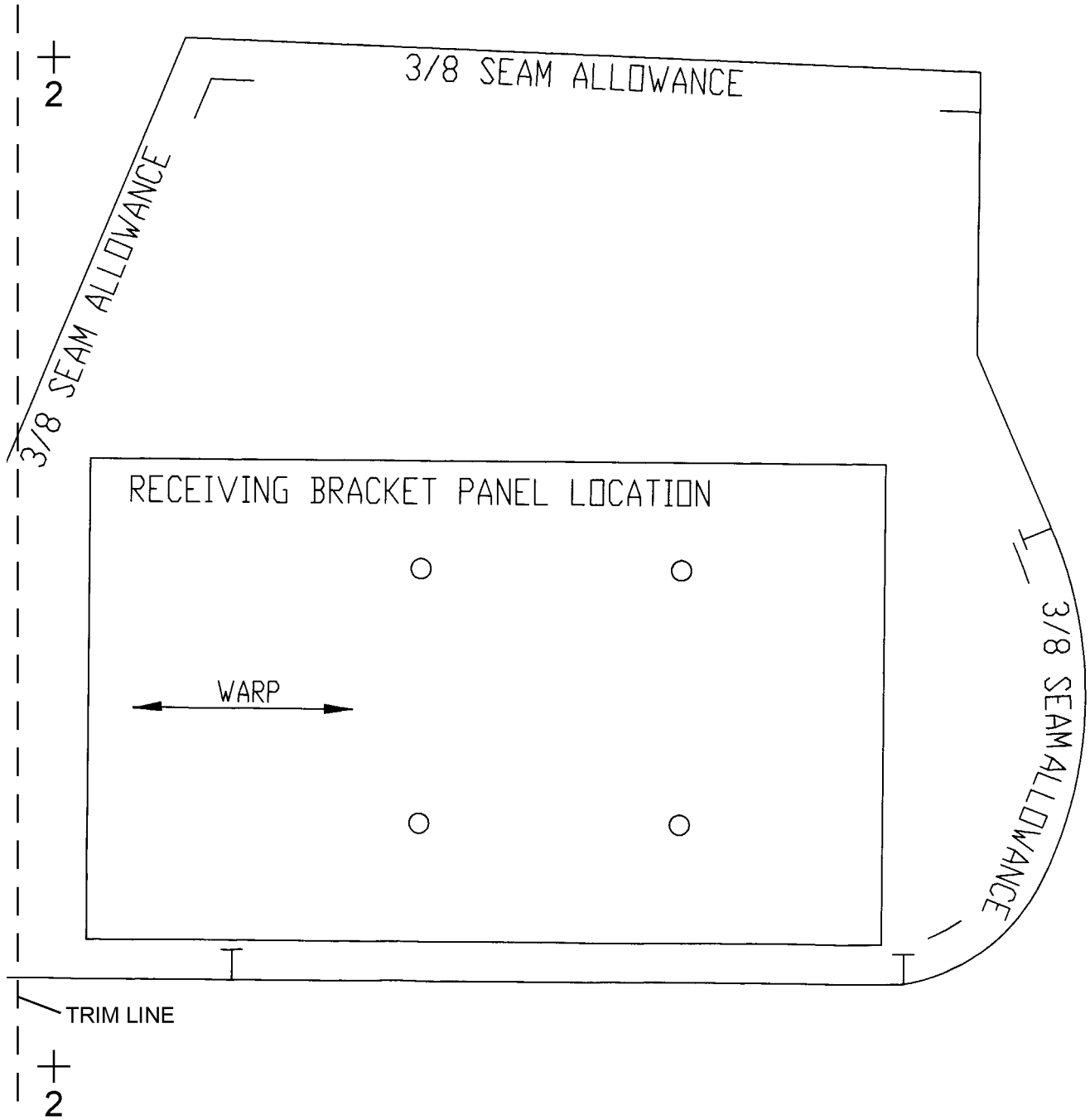

Figure 6-52. Pusher Fan Main Panel Pattern (Sheet 4 of 4)

NOTE: Procedures for the construction of the pattern.
1. Print out all segments of pattern.
2. Trim all printed segments of pattern at dashed trim line ensuring alignment marks (crosses) remain on the pattern.
3. Align crosses with adjacent pattern segments and tape in place.
4. After taping, cut out pattern.

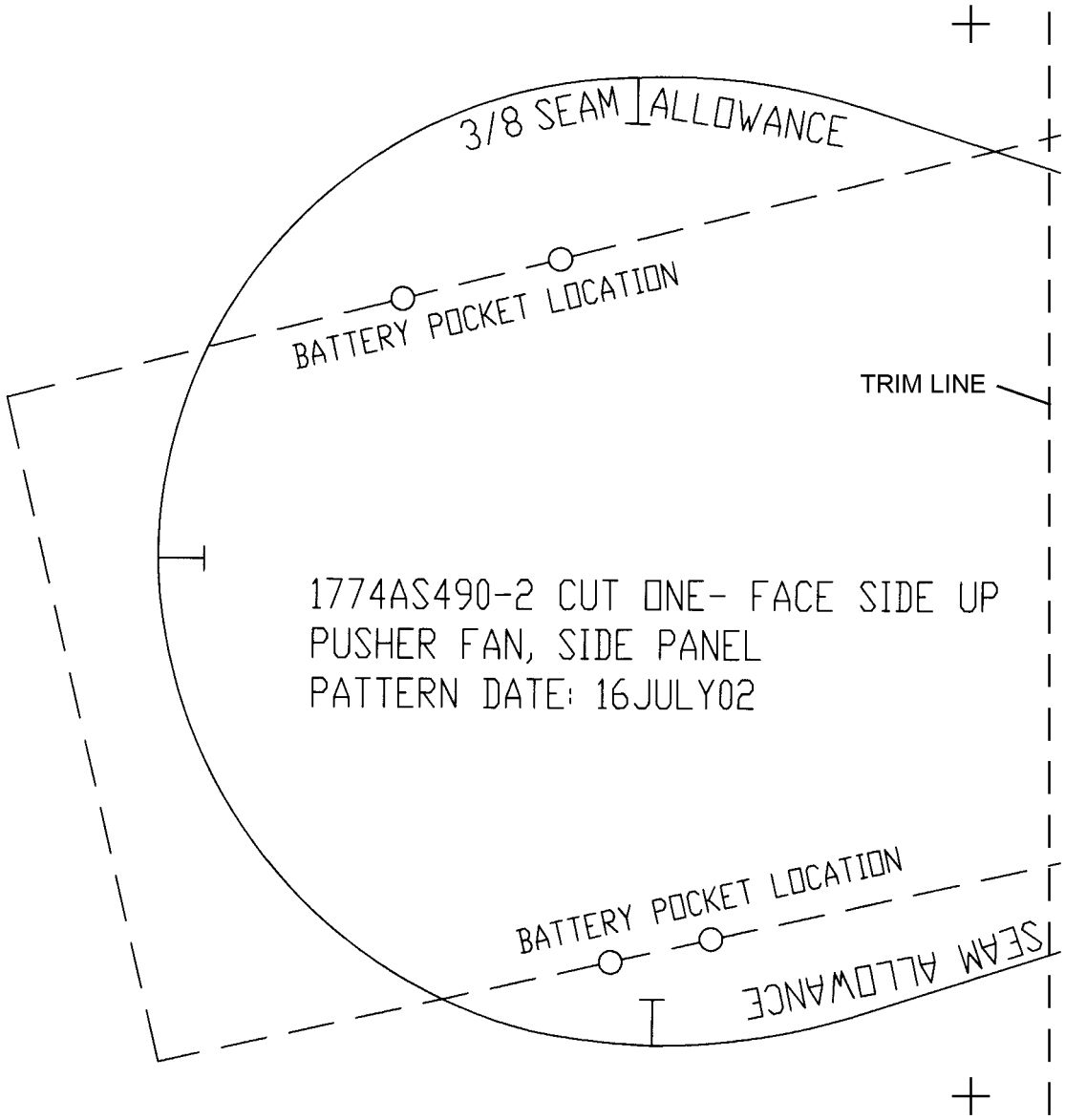

This figure has been divided into multiple segments to facilitate the printing of the pattern.

Figure 6-53. Pusher Fan Side Panel Pattern (Sheet 1 of 2)

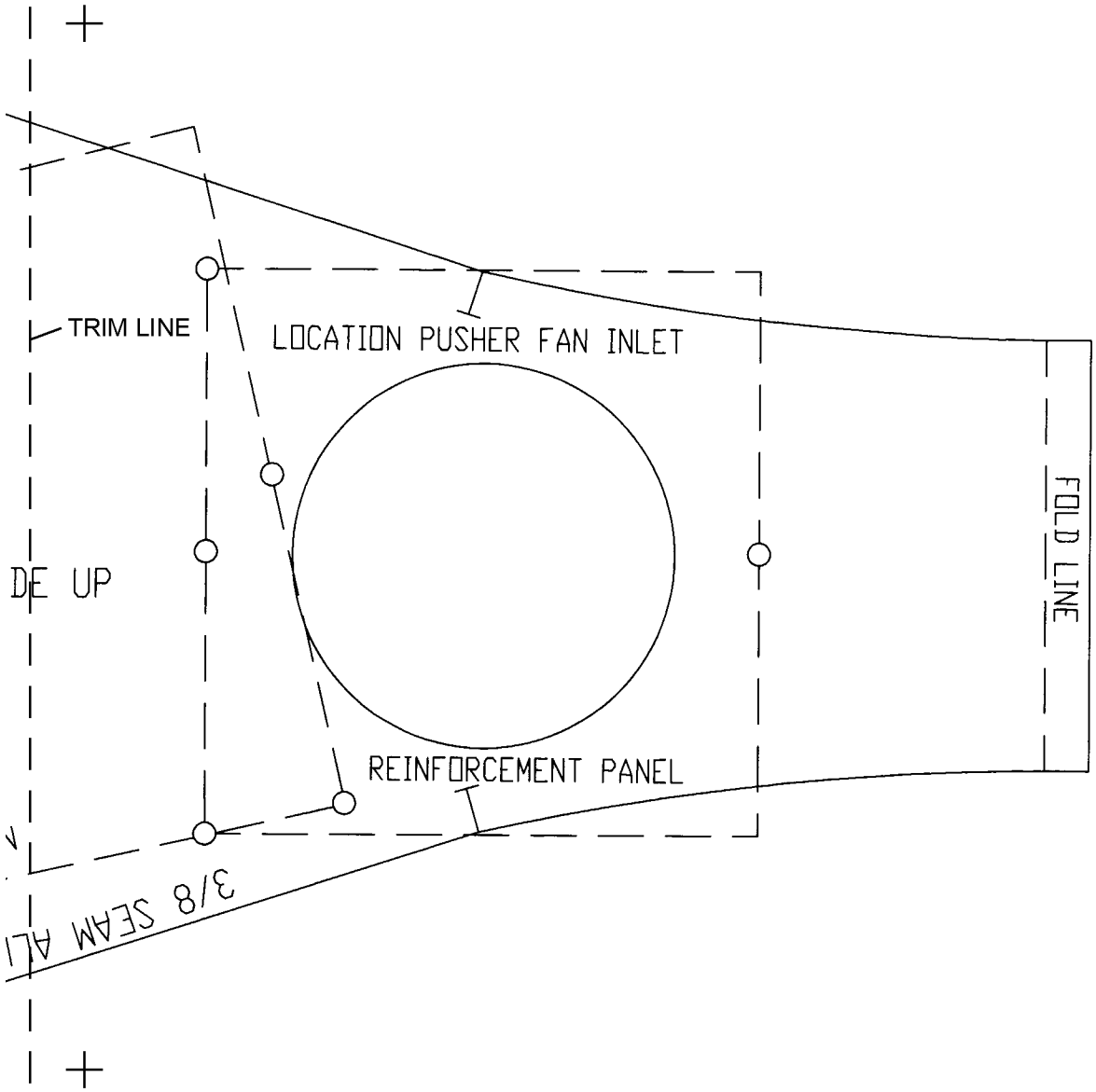

Figure 6-53. Pusher Fan Side Panel Pattern (Sheet 2 of 2)

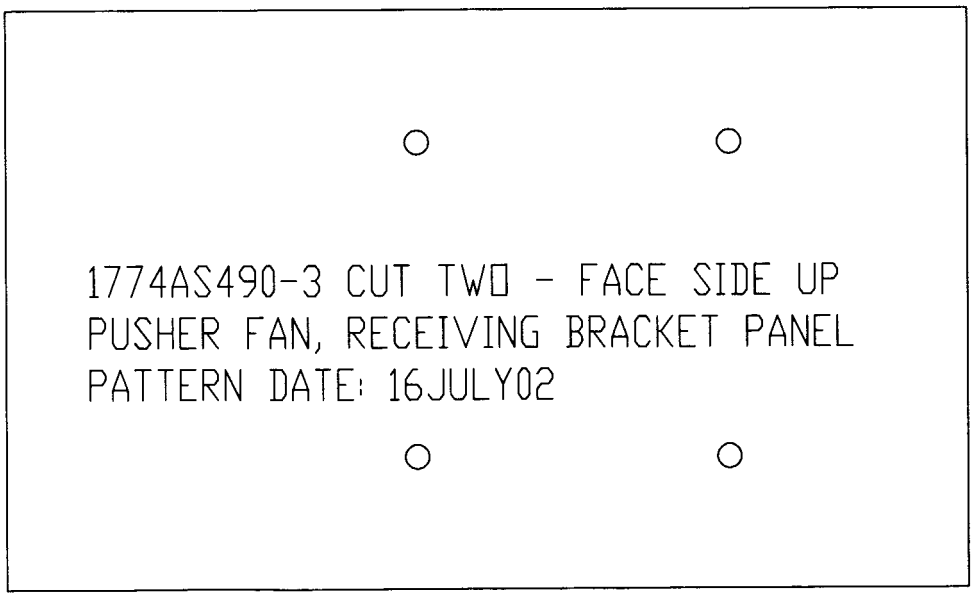

006034w

Figure 6-54. Pusher Fan Receiving Bracket Panel Pattern

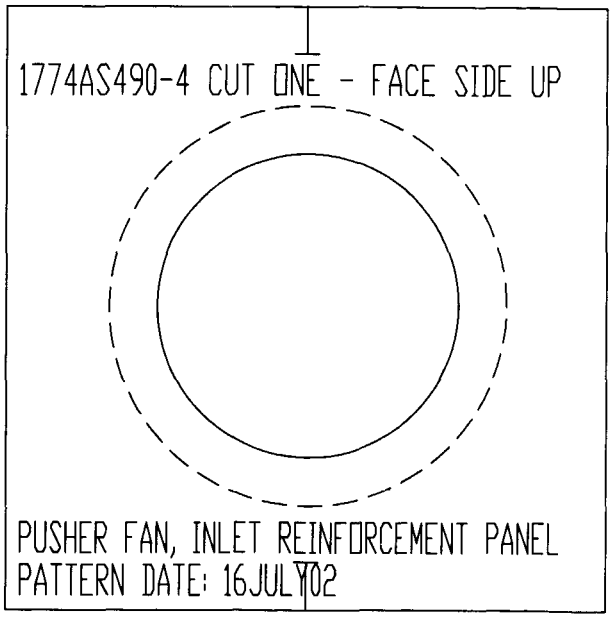

006034x

Figure 6-55. Pusher Fan Receiving Bracket Panel Pattern

NOTE: Procedures for the construction of the pattern.

1. Print out page.
2. Cut pattern segments apart.
3. Trim all segments of pattern at dashed trim line ensuring alignment marks (crosses) remain on the pattern.
4. Align crosses with adjacent pattern segments and tape in place.
5. After taping, cut out pattern.

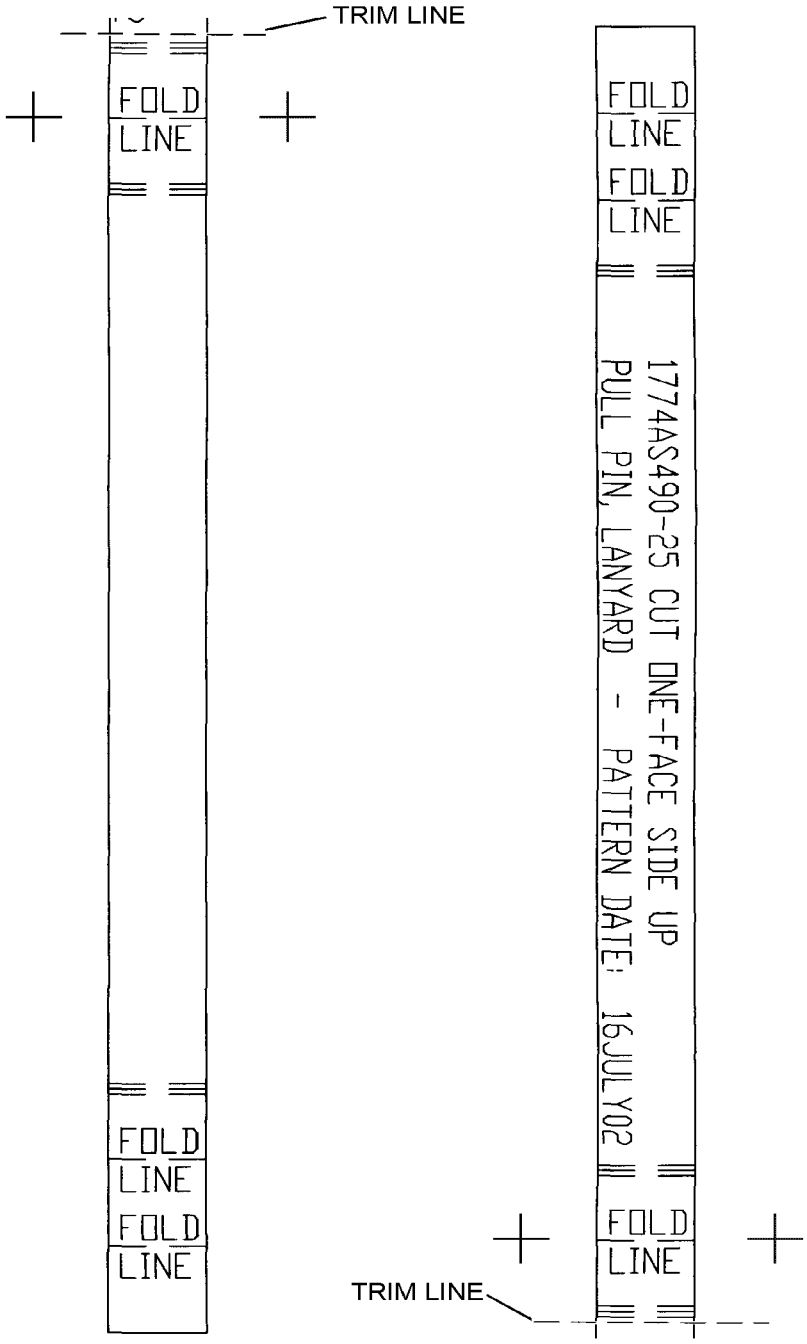

Figure 6-56. Pull Pin Lanyard Pattern

6-100. Fabrication of Battery Pocket. (Figure 6-57)

NOTE

Use existing battery pocket as sample.

1. Identify battery pocket side panel pattern, (Figure 6-58) battery pocket top back inside panel, (Figure 6-59) and battery pocket front panel (Figure 6-60).

2. Lay side, back and front panel patterns onto nylon fabric. Mark all sew points, hook tape location, fold line, slide fastener location, and cut out all three panels.

3. Cut one piece of 2-inch hook tape 5 inches long, place on front panel tape location and sew into place.

4. With side panel placed inside up, at location indicated, position slide fastener with pull tab against fabric, and top stops 3/8 inch down from cut edge of panels. Install 7-inch slide fastener in place using one row of stitches. Turn panel over, cut, and sew entrance area fabric of slide fastener in place. Fold hem lines at slide fastener open end and sew in place using 2 rows of stitches, 1/8 inch and 1/4 inch from folded edge. Repeat the same at opposite end of the panel, as shown on pattern.

5. To fabricate slide fastener, proceed as follows:

a. Lay out Slider (NIIN 00-252-5398) with Slider Fastener closed measure from top stops-down 7 inches and mark for teeth length.

b. Measure another 1 inch for tape length. Cut tape at this mark and remove teeth within the 1-inch measurement.

c. Install bottom stop at bottom of tooth length.

6. Place front panel with hook tape up and to the left. Place side panel with the closed end of slide fastener hemmed edge fabric up, pull slider down, slide pull-tab down, and hemmed edge at location shown on front panel. Once in place, sew together, using one row of stitches 3/8 inch from edge around all three sides.

7. Turn panels right side out. Fold unsewn edge of panel onto itself and sew into place using 2 rows of stitches 1/8 inch and 1/4 inch from folded edge. Panels should match when sewn together.

8. Position back panel with inside face up. Lay side panel on top, with slider pull up and non-slide fastener hemmed end at location to the upper right corner of back panel.

9. Sew side panel to back panel with stitching to the inside edge of the back panel, leaving 3/8 inch exposed, sew edge, this is done for ease sew binding tape. Cut side panel corners 1/8 inch so that sew edge corner fabric will lay flat.

10. Using 1-inch tape, sew binding tape to all four sides, using 2 rows of stitches 1/8 inch and 3/8 inch from folded edges.

11. Cut 7 feet of 1/2-inch Type III tape. Pass tape through eye of slider pull-tab and fold in half onto itself. Slide one bead over end, fold end over 3/8 inch 2 times and sew end in place using 3 rows of stitches side by side centered.

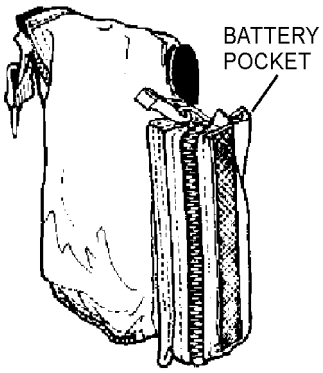

006034y

Figure 6-57. Battery Pocket

NOTE: Procedures for the construction of the pattern.
1. Print out all segments of pattern.
2. Trim all printed segments of pattern at dashed trim line ensuring alignment marks (crosses) remain on the pattern.
3. Align crosses with adjacent pattern segments and tape in place.
4. After taping, cut out pattern.

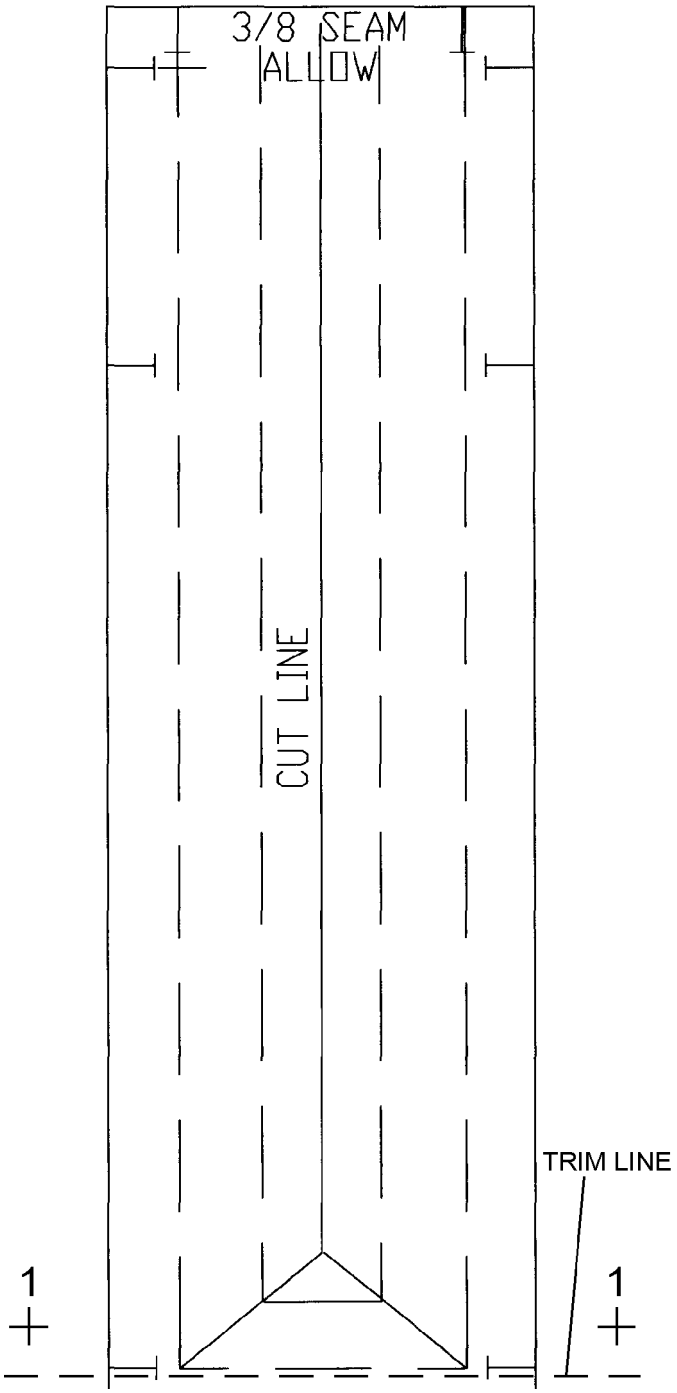

This figure has been divided into multiple segments to facilitate the printing of the pattern.

Figure 6-58. Battery Pocket Side Panel Pattern (Sheet 1 of 3)

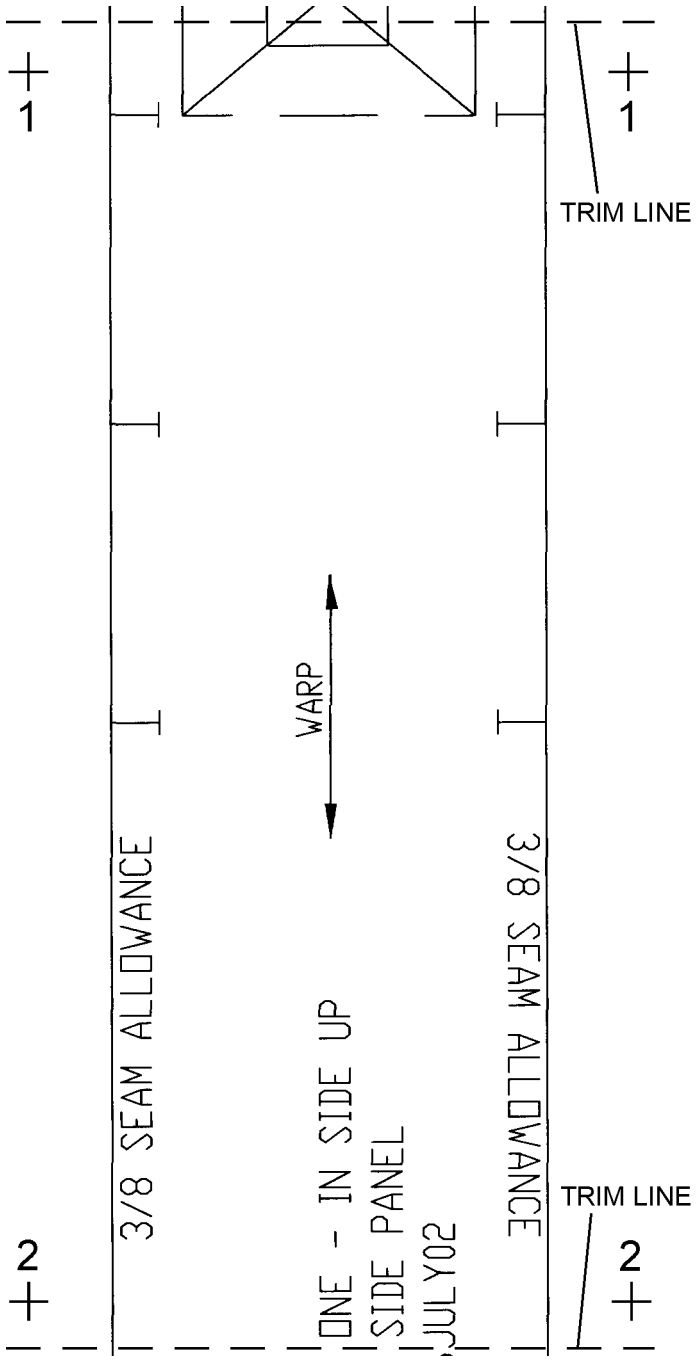

Figure 6-58. Battery Pocket Side Panel Pattern (Sheet 2 of 3)

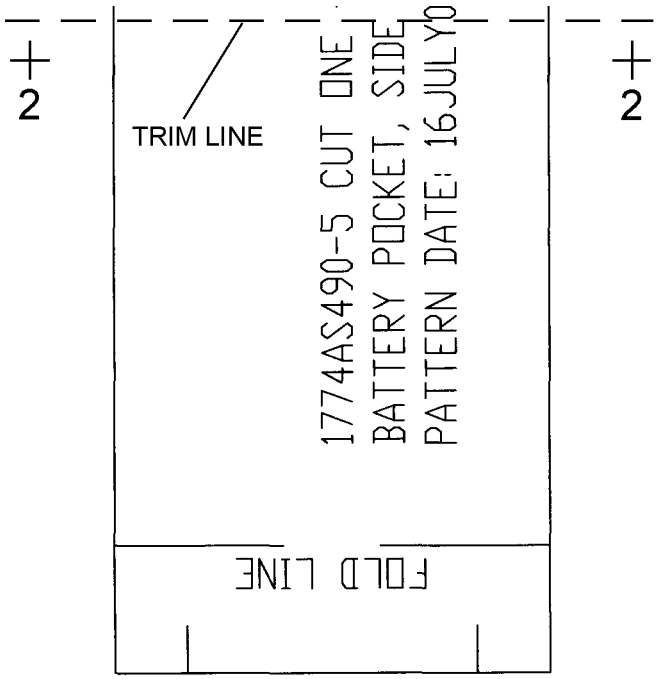

Figure 6-58. Battery Pocket Side Panel Pattern (Sheet 3 of 3)

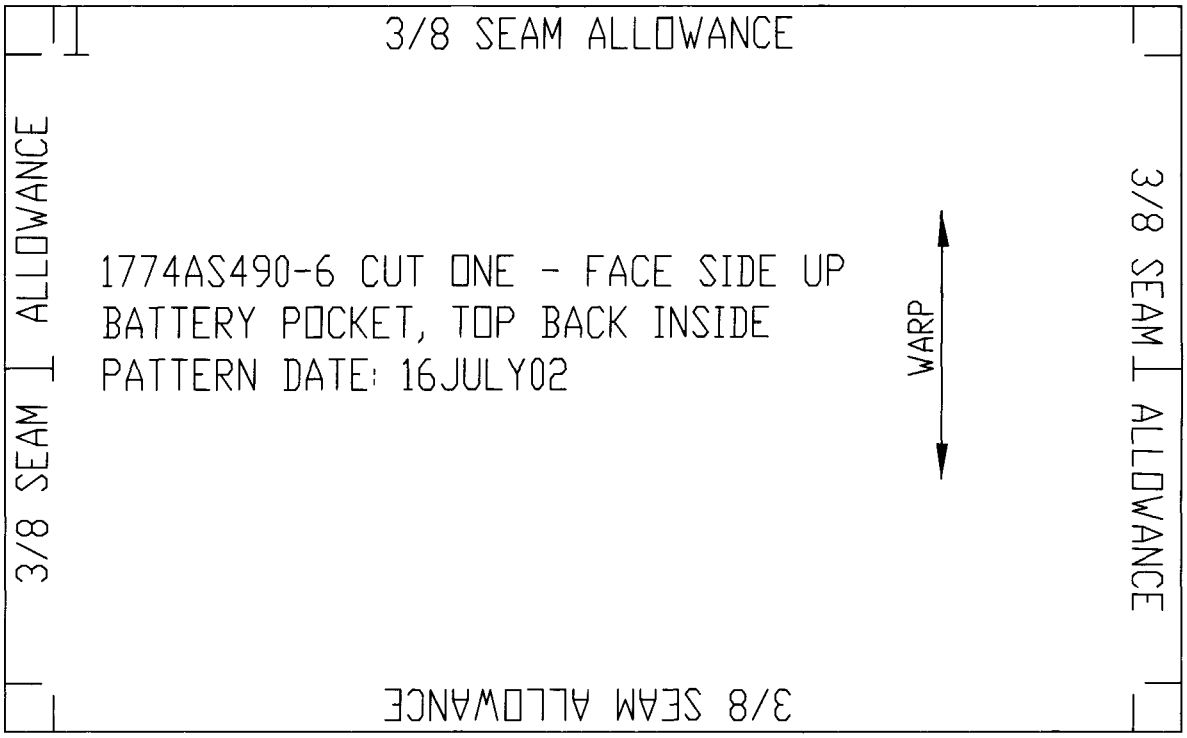

006034aa

Figure 6-59. Battery Pocket Top Back Inside Pattern

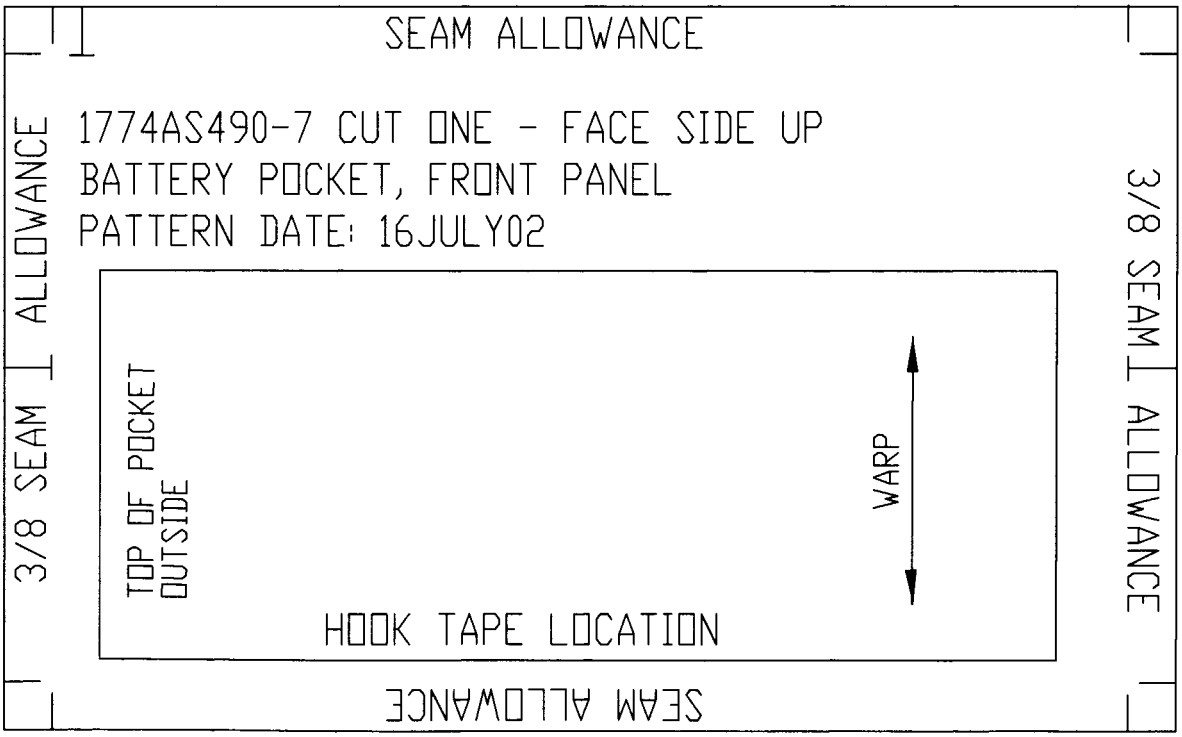

006034ab

Figure 6-60. Battery Pocket Front Panel Pattern

6-101. Fabrication of SRU-40/P HABD Bottle Pocket. (Figure 6-61)

NOTE

Place all patterns to the fabric warp direction. Patterns are labeled front and back.

1. HABD Pocket Main Panel.

a. Lay HABD pocket main panel pattern (Figure 6-62) with front side face down on nylon fabric, mark outside cut lines, all tape placement, all alignment fold lines, alignment sew lines, and cut out.

b. Lay HABD pocket reinforcement panel pattern (Figure 6-63) on Herculite fabric, mark cut out lines, and cut out. Place reinforcement panel onto main panel and sew in position. At top of panel, fold fabric 1/4 inch and hem.

c. With main panel facing up and reinforcement panel down, lay main panel pattern on panel and mark hook tapes positions. Ensure row of 4 snaps are to the right side of the panel.

d. Cut 2 pieces of 2-inch hook tape, one 7 inches long and one 5 inches long. Sew hook tapes in place onto locations shown on main panel.

e. Lay main panel pattern on hook tape, mark snap locations on hook tape, and punch cut holes needed. Place stud MS27983-4 on hook side and set in place with eyelet MS27983-4.

f. Lay main panel with reinforcement up, fold bottom corners together on each side, using one row of stitches and 3/8 inches from edge, sew sides of bottom to form the bottom main pocket.

g. Cut one piece of 1-inch elastic tape 4 1/2 inches long, with the hemmed top edge up, sew ends of elastic in place 1/8 inches down from top edge of pocket, (stretched from side to side).

h. Fold the edge over 1 1/4 inches onto itself. When stretched, sew in place using one row of stitches on folded edge and one row at bottom of fold. Once done, put aside for final assembly.

2. SRU-40/P HABD Pocket Support Panel.

a. Lay HABD pocket support panel pattern (Figure 6-64) onto nylon fabric with front pattern facing up, mark cutout lines, ensure stiffener panel sew edge line are shown, cut out.

b. Lay HABD pocket snap panel stiffener panel pattern (Figure 6-65) onto Herculite fabric, mark cutout lines, snap installation holes and cut out. Place snap panel stiffener onto support panel and sew into place.

c. Turn panel over with stiffener down, place back of support panel pattern onto the panel, ensuring top of panel and pattern match. Mark hook tape position marks, cut one piece of 2-inch hook tape 7 inches long, and sew into place.

d. Lay support panel pattern onto hook tape, mark snap locations on hook tape and punch cut holes of snaps. Place sockets MS27983-1 on the hook tape when installing buttons MS27983-1. Ensure top two lock lugs of sockets are facing towards top of panel, and bottom two lock lugs are towards the bottom.

e. Fold panel at fold line and sew the sides together using one row of stitches. The fold line edge is the top of the support panel.

f. On the top end of support panel, above the first snap opposite the socket, place D-ring with a 2-inch piece of Type IV webbing folded in half around ring, and ring towards folded edge, sew in place using 3 rows of stitches side by side next to ring.

3. Final Assembly of Pocket.

a. Lay support panel out with D-ring down and snap socket up. Position HABD main panel on top with hook and pile tape inboard. Ensuring both sides, bottom and top edge are centered onto support panel. Sew panels together with one row of stitches, and double backstitch top elastic corners.

b. Turn bottle pocket right side out, ensure all support panel seams are completely turned out board. Top stitch support panel edge seams using one row of stitches, stopping at elastic webbing.

c. Install HABD bottle to ensure proper fit.

d. Position HABD pocket on CMU-23 as described by ACC 616.

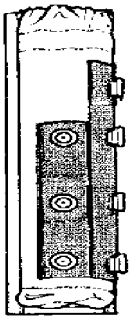

006034ac

Figure 6-61. SRU-40/P HABD Bottle Pocket

NOTE: Procedures for the construction of the pattern.
1. Print out all segments of pattern.
2. Trim all printed segments of pattern at dashed trim line ensuring alignment marks (crosses) remain on the pattern.
3. Align crosses with adjacent pattern segments and tape in place.
4. After taping, cut out pattern.

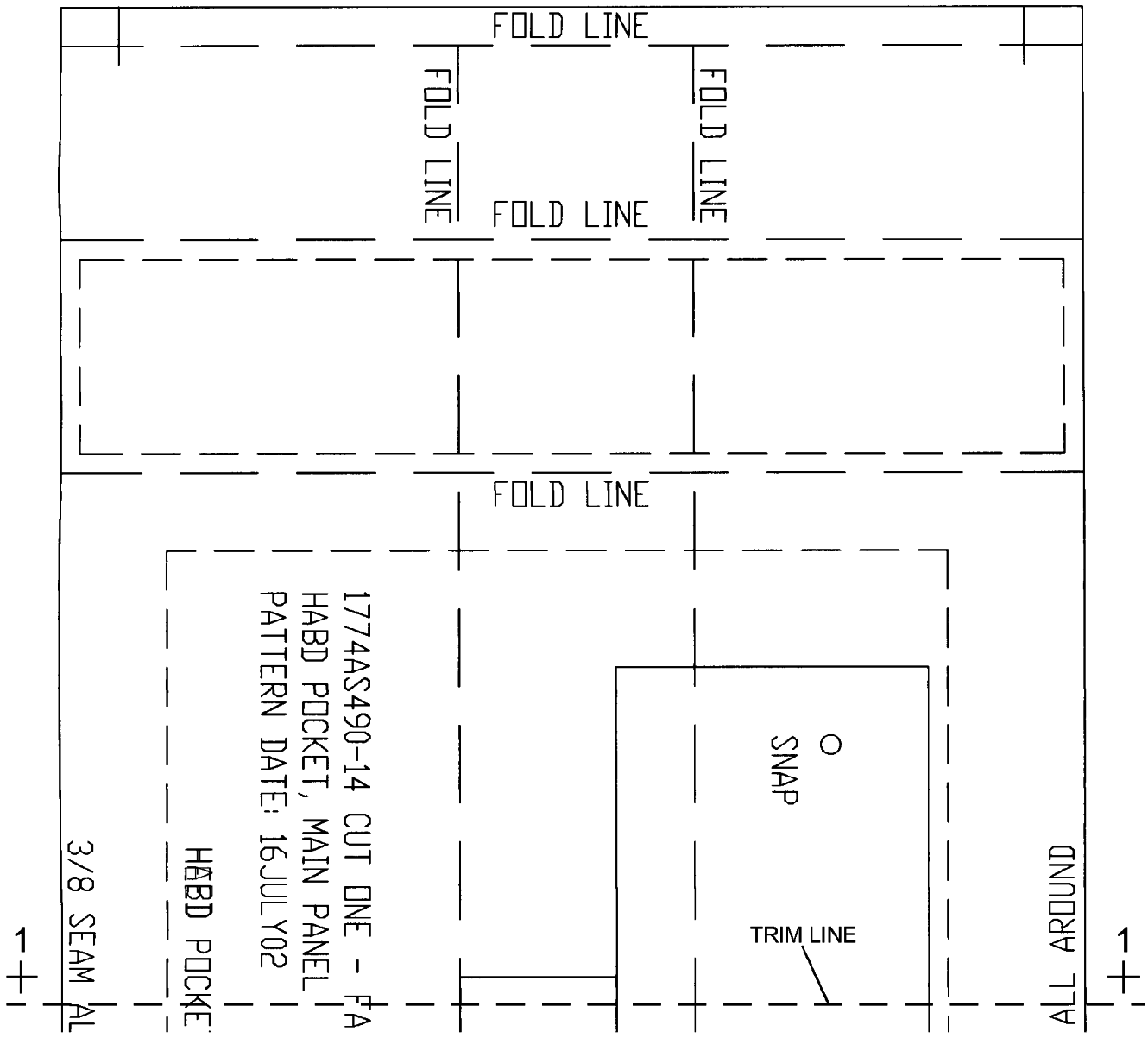

This figure has been divided into multiple segments to facilitate the printing of the pattern.

Figure 6-62. HABD Pocket Main Panel Pattern (Sheet 1 of 3)

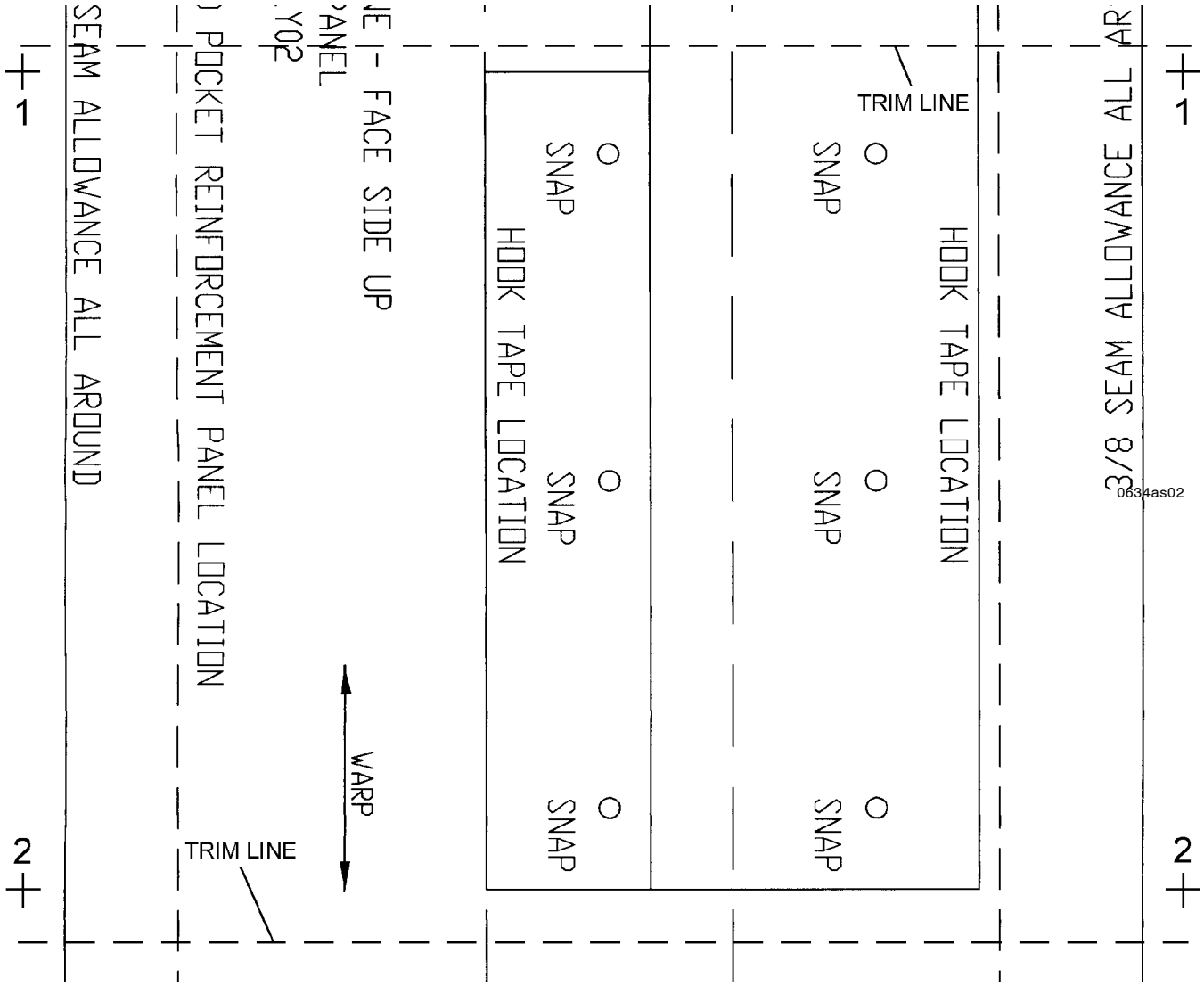

Figure 6-62. HABD Pocket Main Panel Pattern (Sheet 2 of 3)

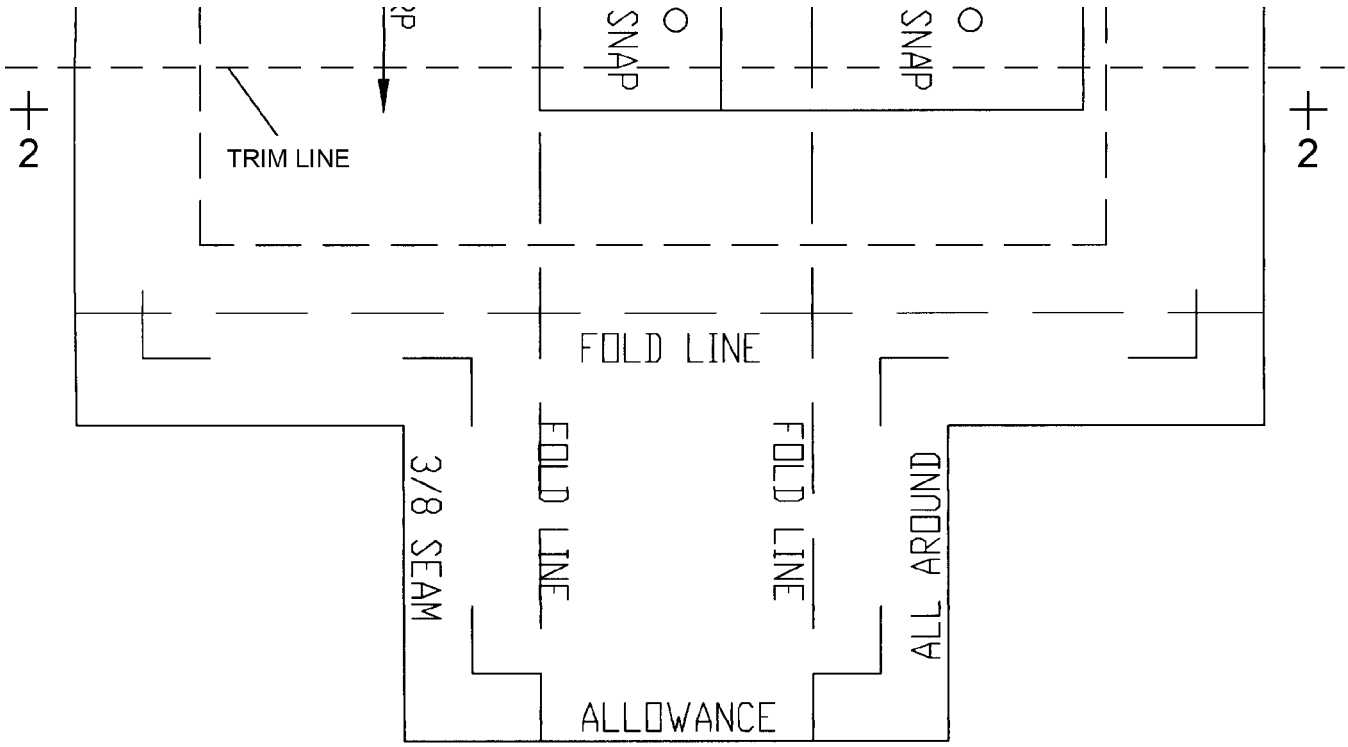

Figure 6-62. HABD Pocket Main Panel Pattern (Sheet 3 of 3)

NOTE: Procedures for the construction of the pattern.
1. Print out all segments of pattern.
2. Trim all printed segments of pattern at dashed trim line ensuring alignment marks (crosses) remain on the pattern.
3. Align crosses with adjacent pattern segments and tape in place.
4. After taping, cut out pattern.

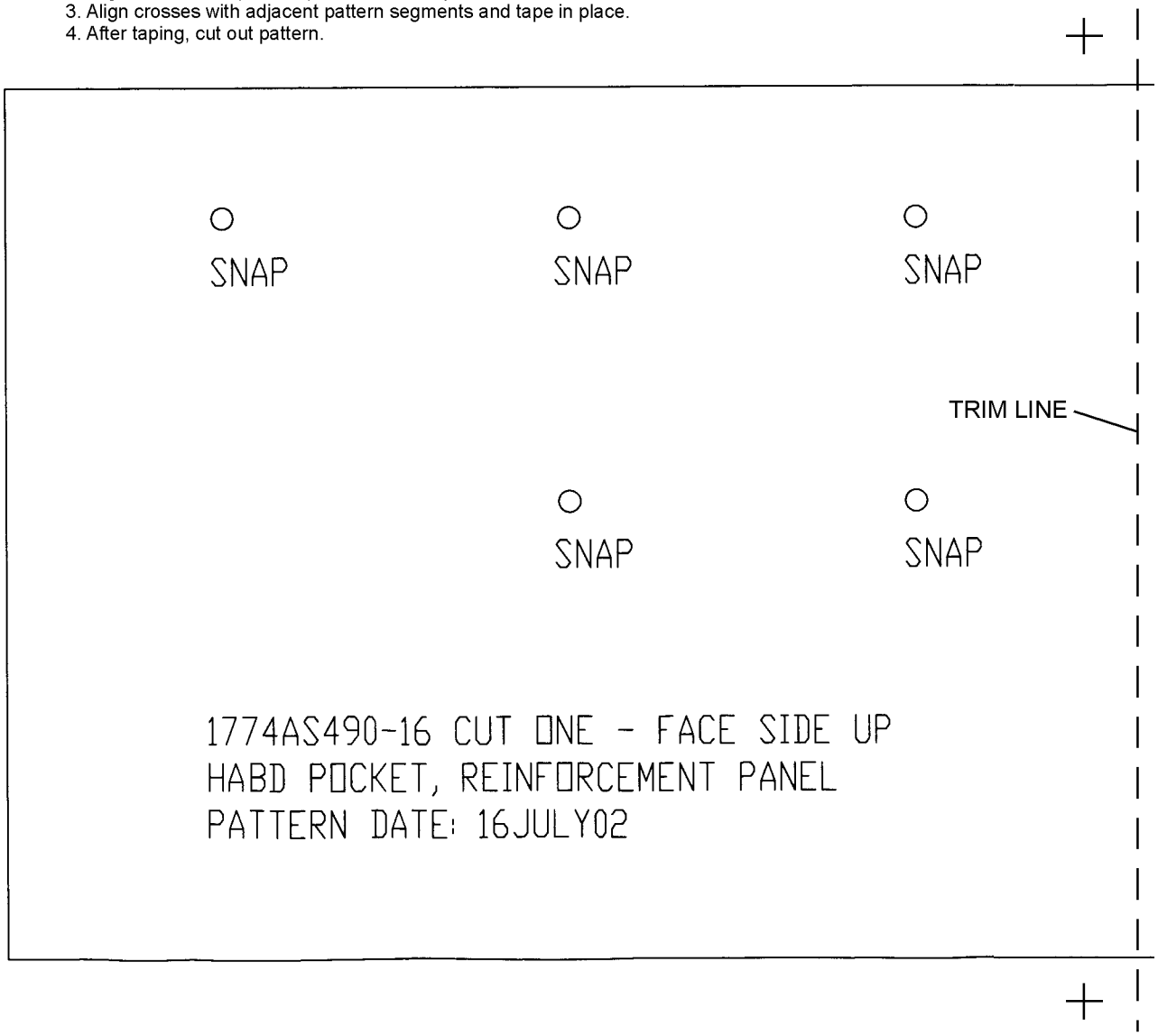

This figure has been divided into multiple segments to facilitate the printing of the pattern.

Figure 6-63. HABD Pocket Reinforcement Panel Pattern (Sheet 1 of 2)

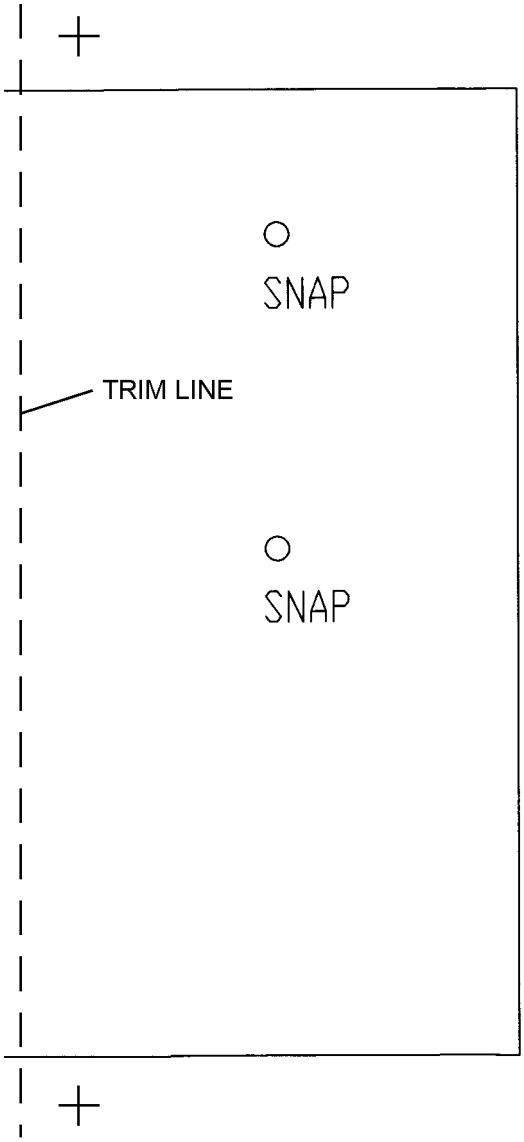

Figure 6-63. HABD Pocket Reinforcement Panel Pattern (Sheet 2 of 2)

NOTE: Procedures for the construction of the pattern.
1. Print out all segments of pattern.
2. Trim all printed segments of pattern at dashed trim line ensuring alignment marks (crosses) remain on the pattern.
3. Align crosses with adjacent pattern segments and tape in place.
4. After taping, cut out pattern.

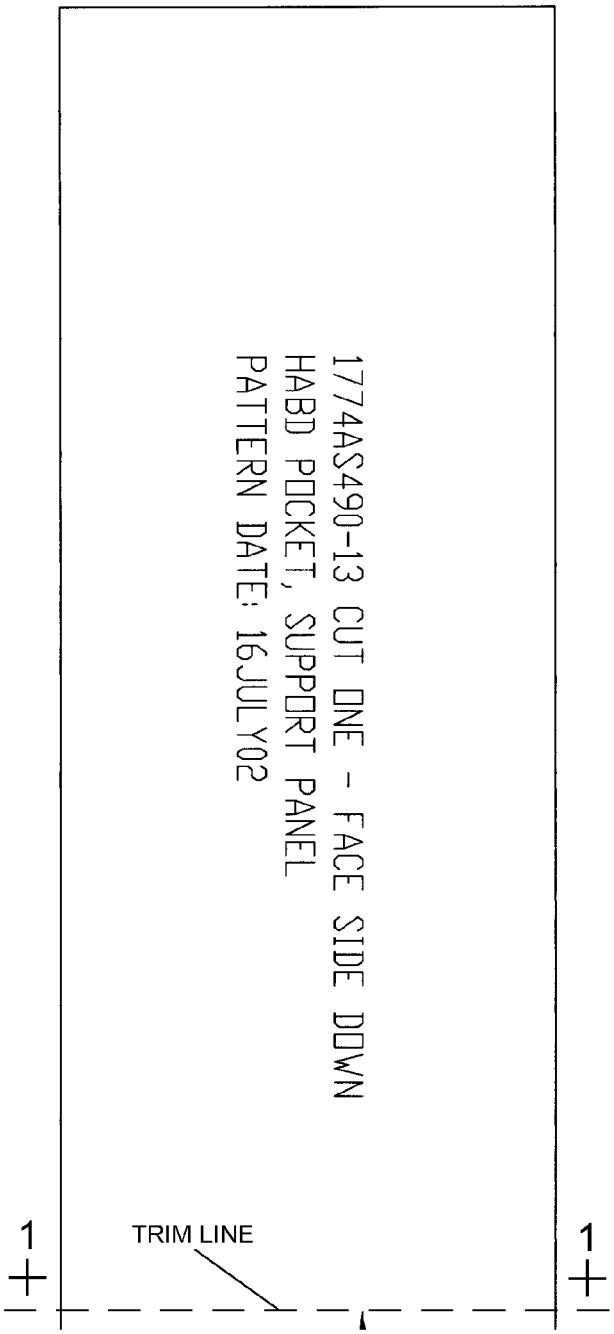

This figure has been divided into multiple segments to facilitate the printing of the pattern.

Figure 6-64. HABD Pocket Support Panel Pattern (Sheet 1 of 4)

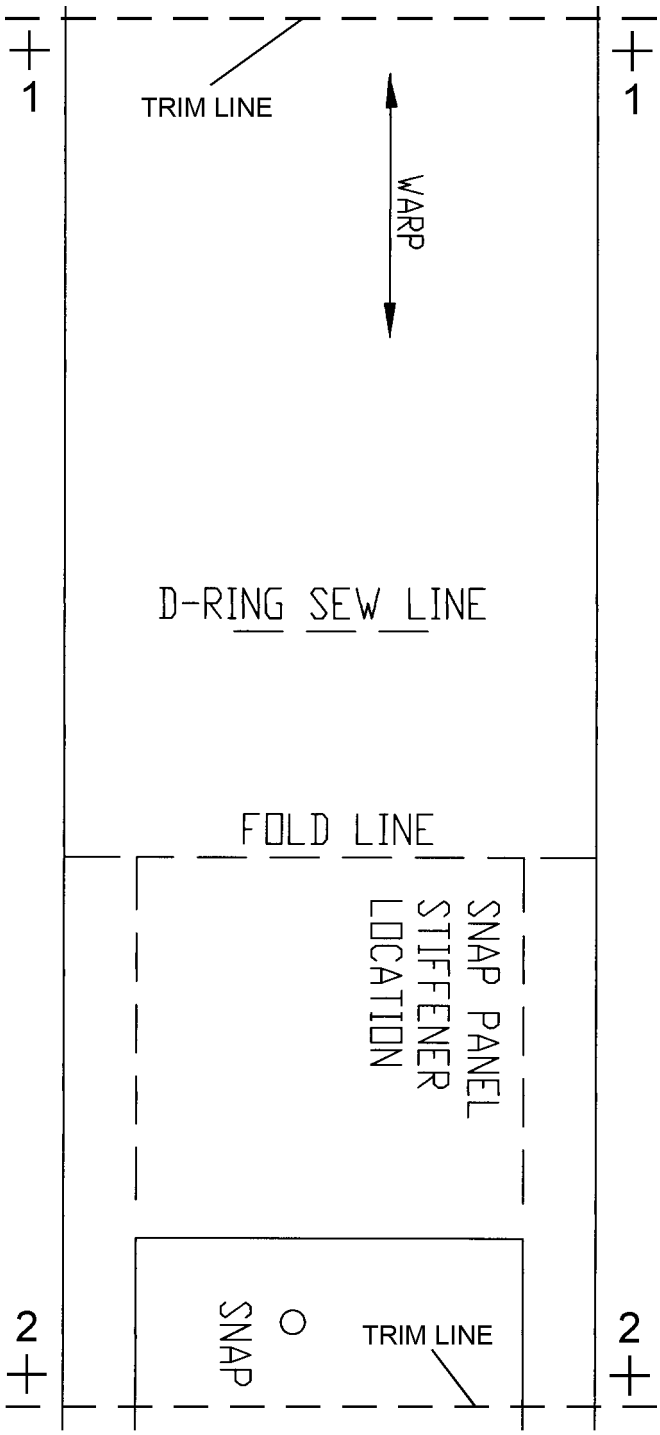

Figure 6-64. HABD Pocket Support Panel Pattern (Sheet 2 of 4)

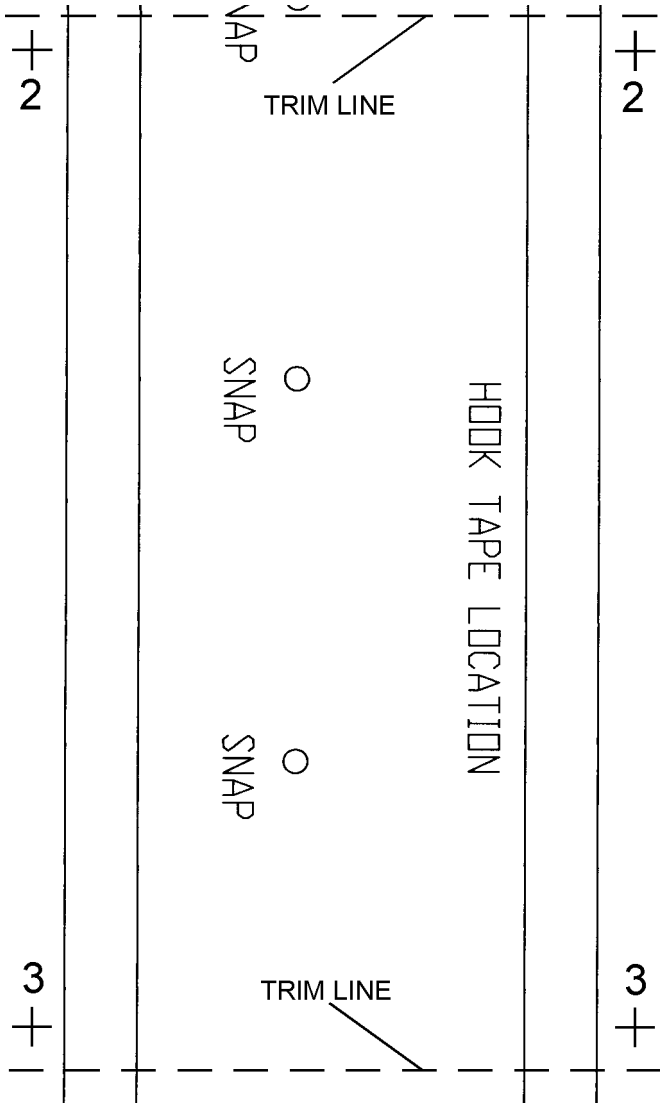

Figure 6-64. HABD Pocket Support Panel Pattern (Sheet 3 of 4)

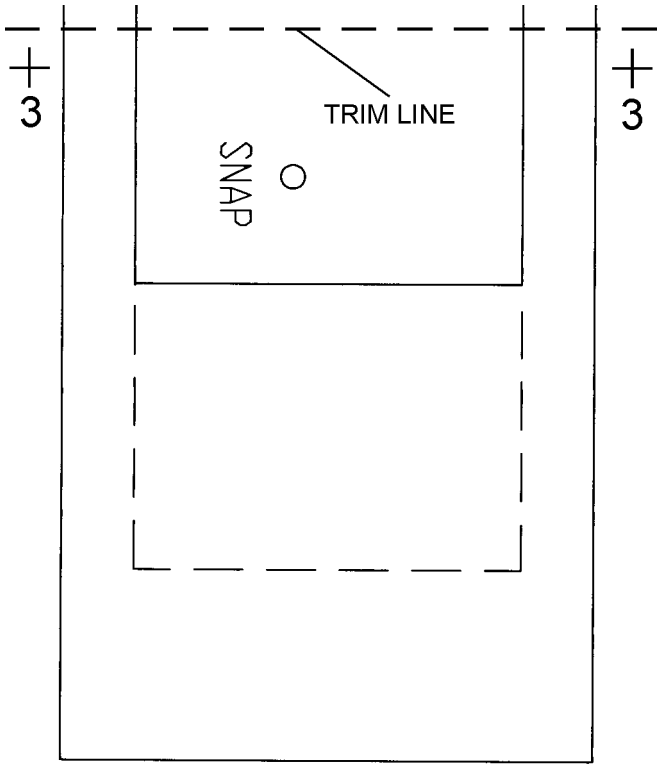

Figure 6-64. HABD Pocket Support Panel Pattern (Sheet 4 of 4)

NOTE: Procedures for the construction of the pattern.

1. Print out page.
2. Cut pattern segments apart.
3. Trim all segments of pattern at dashed trim line ensuring alignment marks (crosses) remain on the pattern.
4. Align crosses with adjacent pattern segments and tape in place.
5. After taping, cut out pattern.

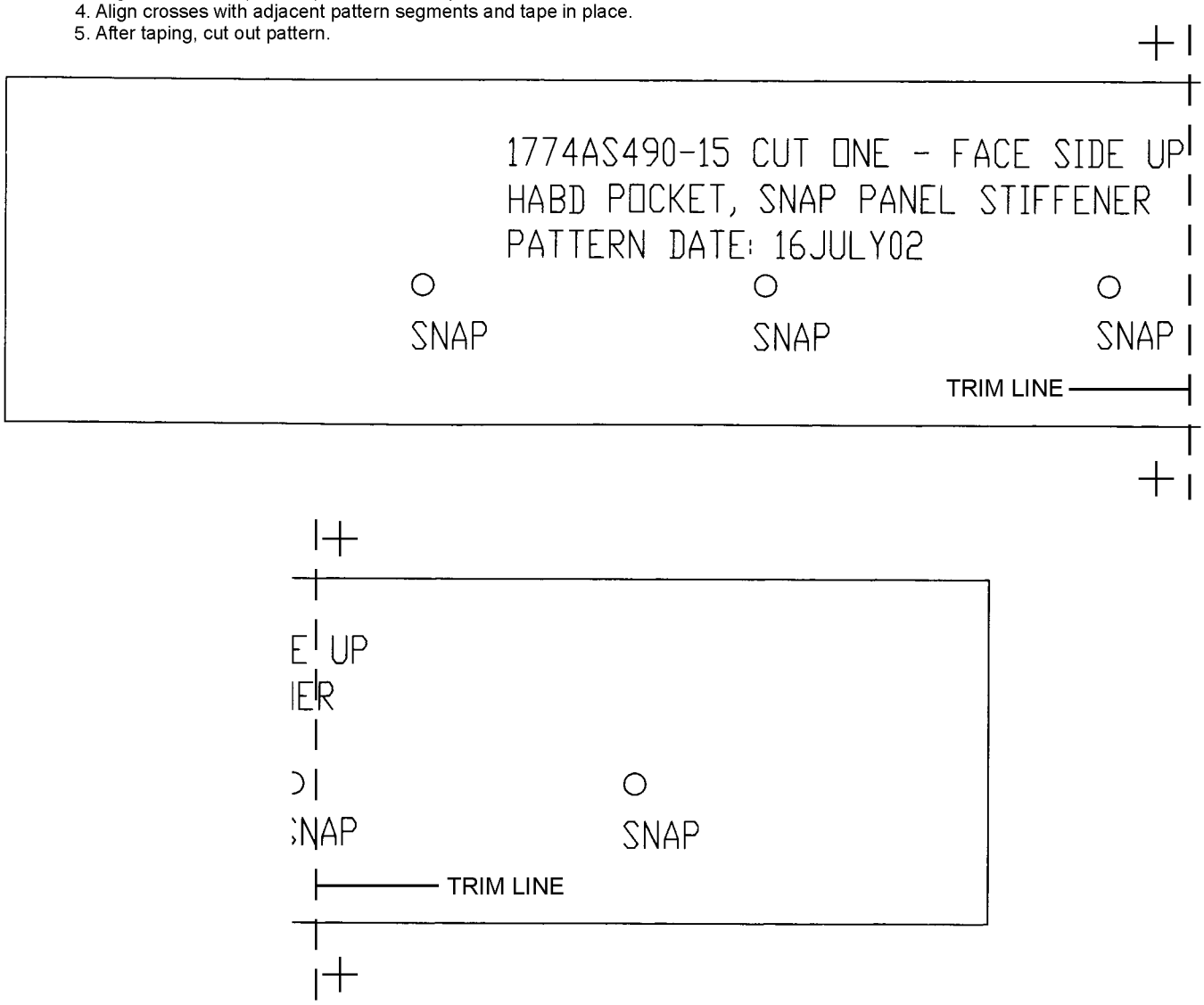

Figure 6-65. HABD Pocket Snap Panel Stiffener Pattern

Section 6-4. CMU-24/P Survival Vest

6-102. GENERAL.

6-103. The CMU-24/P Survival Vest (Figure 6-66) provides storage for survival equipment necessary during overland missions. It is fleet assembled from the SRU-21/P Survival Vest, with a modified pocket configuration. SRU-21/P Survival Vests modified in accordance with ACC 624 are redesignated CMU-24/ P-FW.

6-104. CONFIGURATION.

6-105. The CMU-24/P Survival Vest is constructed of nylon mesh fabric with woven nylon pocket. It has a separating slide fastener front closure and lacing located on the back of the vest for size adjustment.

6-106. APPLICATION.

6-107. The CMU-24/P is designed for use by all TH-57, TH-1L, and Overland Search and Rescue (SAR) aircrewmembers. The CMU-24/P-FW is designed for use by T-34C instructor pilots.

6-108. INITIAL FABRICATION OF CMU-24/P SURVIVAL VEST.

6-109. To fabricate the CMU-24/P Survival Vest, proceed as follows:

Materials Required

Quantity	Description	Reference Number
1	Vest, Survival, Type SRU-21/P (see table 6-7, Note) Size:	MIL-V-83271
	Small	NIIN 01-322-1980
	Medium	NIIN 01-254-7601
	Large	NIIN 01-254-7602
1	Pocket, Radio Survival Vest For AN/PRC-90 Series	MIL-V-83271 NIIN 00-442-3616
	-or-	
	Pocket, Radio Survival Vest, For AN/PRC-149, AN/PRQ-7	829AS146-1 NIIN 01-275-8735

Materials Required (Cont.)

Quantity	Description	Reference Number
As Required	Thread, Nylon High Temperature Resistant, Sage Green	MIL-T-83193 NIIN 00-130-6245
	-or-	
	Thread, Nylon Type II, Size E, Sage Green	V-T-295 NIIN 00-204-3884
30 Inches	Cord, Nylon Type III, Natural	MIL-C-5040 NIIN 00-240-2146
As Required	Fastener Tape, Hook, Type I, Class 1, Sage Green, 1-Inch Width	MIL-F-21840 NIIN 00-405-2266
As Required	Fastener Tape, Pile, Class 1, Sage Green, 1-Inch Width	MIL-F-21840 NIIN 00-405-2263
As Required	Ink, Waterproof, Black	TT-I-542 NIIN 00-161-4229

NOTE

All stitching shall be in accordance with ASTM-D-6193, Type 301 lockstitch, 7 to 10 stitches per inch with minimum 1/2-inch backstitch. Refer to Figure 6-38 for steps 3 through 7.

1. Mark locations of pockets on vest in accordance with Figure 6-67 and Figure 6-68.

2. Remove stitching along sides of inside pockets (already installed in vest), being careful not to damage fabric. Do not remove stitching at bottom edge of pocket.

NOTE

When attaching outside pockets keep inside pockets clear of stitching.

3. For the flare kit pocket and large miscellaneous pocket, attach pile tape to vest using a single row of stitching, 1/8 inch from all edges.

4. Attach pile tape to all pocket flaps, using a single row of stitching, 1/8 inch from all edges.

6-35

Figure 6-66. CMU-24/P Survival Vest

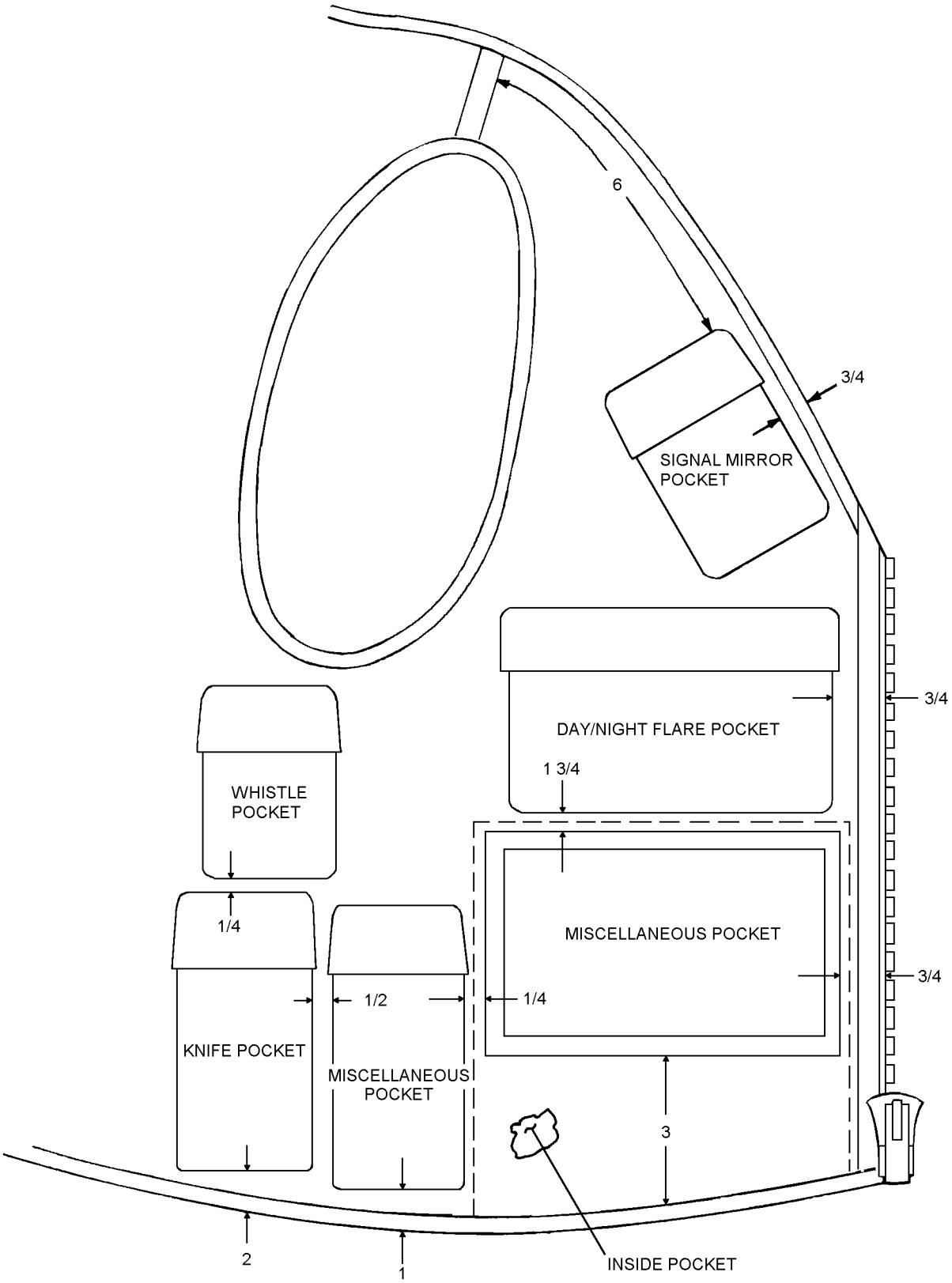

6-36

Figure 6-67. CMU-24/P Survival Vest Pocket Placement - Right Front

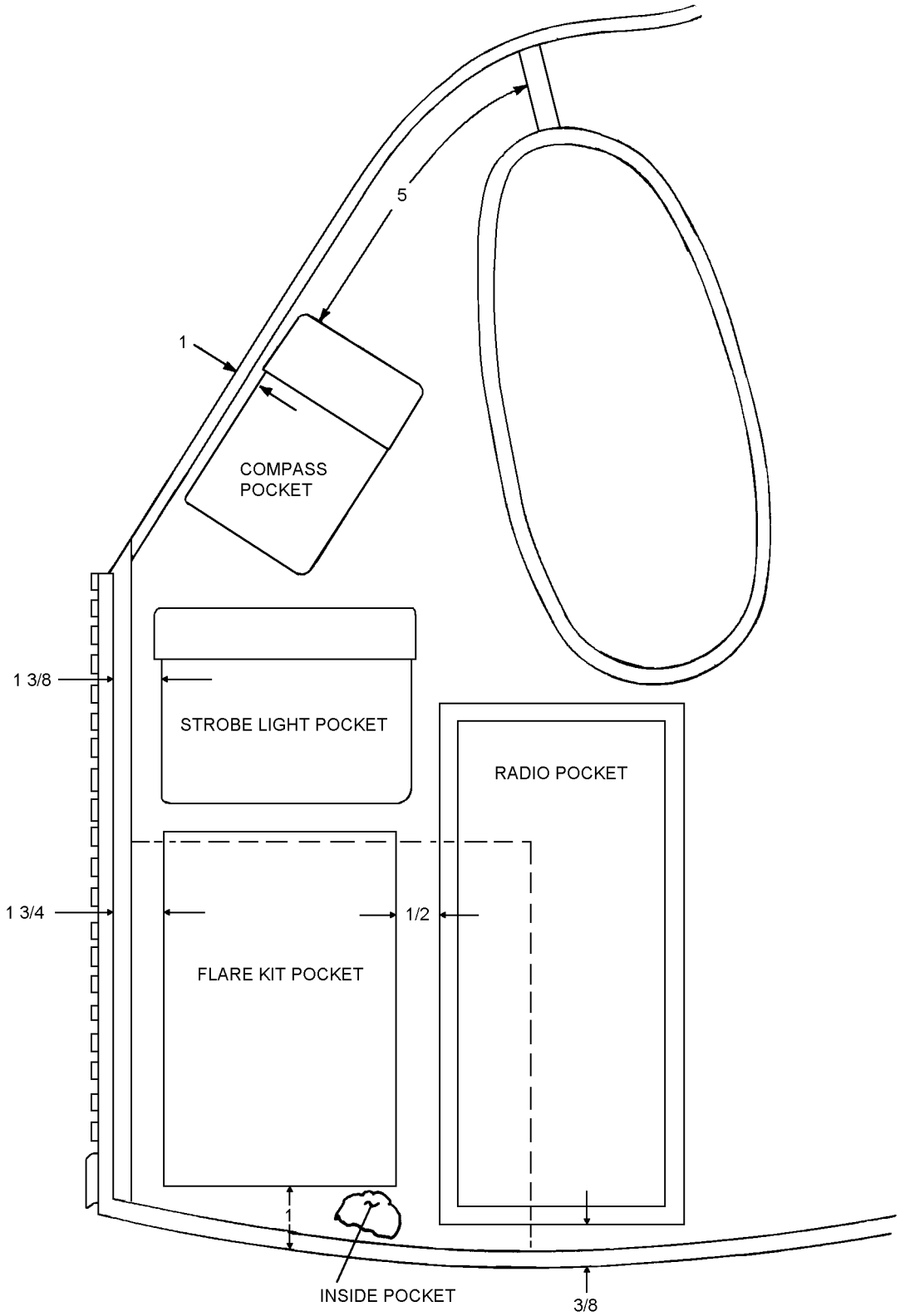

6-37

Figure 6-68. CMU-24/P Survival Vest Pocket Placement - Left Front

Table 6-7. Pockets for CMU-24/P Survival Vest

Pocket	Dimensions Width Length Depth	Flap
Signal Mirror	2 5/8 X 3 X 1	Yes
Day/Night Flare	6 5/8 X 2 5/8 X 1 3/8	Yes
Whistle	2 5/8 X 2 1/4 X 1 1/4	Yes
Knife	2 X 4 X 1 1/4	Yes
Miscellaneous	2 1/4 X 3 3/4 X ---	Yes
Miscellaneous	5 1/2 X 3 1/2 X 1 3/4	No
Compass	2 3/4 X 3 X 1	Yes
Strobe Light	5 X 2 1/4 X 1	Yes
Flare Kit	4 1/2 X 6 3/4 X ---	No
Radio	3 3/4 X 9 1/2 X 1 1/4	No

Note: With the exception of the radio pocket, all of the pockets listed above are provided with the SRU-21/P, and in some cases are already attached to the vest. Location and configuration of pockets shall be compared to Figure 6-67 and Figure 6-68, and repositioned as necessary. The radio pocket must be procured separately.

5. Attach hook tape to all pockets, using a single row of stitching 1/8 inch from all edges.

6. Attach securing loops to all pockets.

7. Attach pockets and flaps to vest.

8. Restitch inside pocket stitching removed during Step 2 at sides, 1/8 inch from edges, keeping outside pocket clear of stitching.

9. Reidentify vest by blacking out the SRU-21/P identification on the identification label using wash-proof black ink. Add new identification, CMU-24/P, as close as possible to original identification using wash-proof black ink.

6-110. FITTING.

6-111. The CMU-24/P vest is worn with standard Navy personal equipment and is supplied in three sizes, small (32 to 35 inches), medium (36 to 42 inches) and large (43 to 49 inches).

6-112. Waist adjustment is accomplished by loosening/tightening the waist lacing located on the back of the vest. A properly fitted CMU-24/P should conform to the torso without gaps, yet not restrict breathing or movement.

6-113. SHOULDER ADJUSTMENT. To shorten the length of the vest proceed as follows:

Materials Required

Quantity	Description	Reference Number
As Required	Thread, Nylon, High Temperature Resistant, Sage Green	MIL-T-83193 NIIN 00-130-6245
	-or-	
As Required	Thread, Nylon, Type II, Size E	V-T-295 NIIN 00-204-3884

1. Have aircrewmember don vest.

2. Pull vest up at shoulder. Mark new shoulder line on front and back of vest.

3. Have aircrewmember remove vest.

4. Match up marks on shoulder. Hand tack or machine stitch (using stitch type 301, 8 to 10 stitches per inch) at marks. Fold excess toward back. Stitch close to edge of fold.

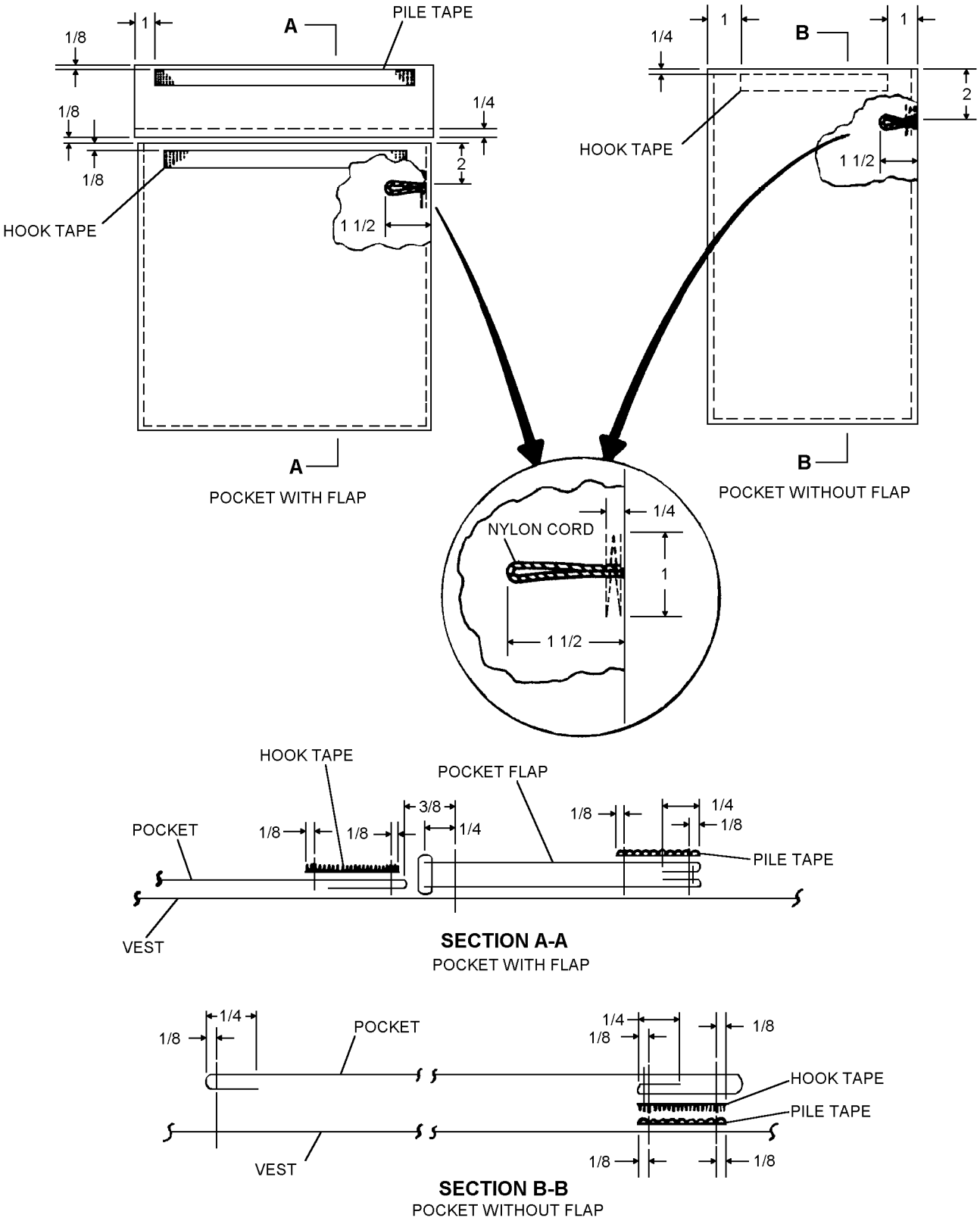

6-38

Figure 6-69. Installation of CMU-24/P Vest Pockets

6-114. RIGGING AND PACKING.

6-115. To rig and pack a CMU-24/P Survival Vest, proceed as follows:

Materials Required

Quantity	Description	Reference Number
As Required	Cord, Nylon, Type I (with core strands removed)	MIL-C-5040 NIIN 00-240-2154
	-or-	
	Type IA (coreless)	NIIN 00-292-9920
12 Inches	Webbing, Textile, Nylon, Type II, 1-Inch Wide	MIL-W-4088
	-or-	
12 Inches	Tape, Textile, and Webbing, Reinforcing Nylon, Type IV, 1-Inch Wide	MIL-T-5038
As Required	Rubber Bands	—

WARNING

Additional items may be added to the CMU-24/P, at the discretion of the aircrewmember. In no case shall additional items exceed 5 pounds total weight. Each additional item shall be secured to the CMU-24/P with a 48-inch length of nylon cord and items shall be stowed to maintain equal weight balance of the vest.

1. Ensure that all survival equipment has been inspected in accordance with NAVAIR 13-1-6.5.

2. Lay out vest and survival items on a clean table.

NOTE

Refer to glossary for directions for tying a bowline knot. Unless otherwise specified, all items will be secured to the vest using a bowline knot and a 48-inch length of nylon cord. Sear the cut ends to eliminate cord fraying. Take the remaining line secured with a lightweight rubber band and stow in vest miscellaneous pocket (see Figure 6-70).

3. Tie a 48-inch length of nylon cord to the pocket loop and retaining loop on the SDU-5/E marker distress light.

NOTE

If SDU-39/N Distress Strobe Light is used, the nylon retaining cord shall be passed through the hole below the SDU-39/N ON/OFF switch and through the loop formed by the folded end of the SDU-39/N lanyard. Refer to paragraph 6-46 for fabrication and installation of the SDU-39/N lanyard.

4. Cut and sear a 12-inch length of 1-inch webbing (MIL-W-4088, Type II, yellow, or MIL-T-5038, Type IV, Sage Green) and place through loop on distress signal light and draw ends even. Stitch a single row 1/8 inch from edge around all edges as close as possible to loop. Double stitch across tape next to loop. Crossbox stitch open end.

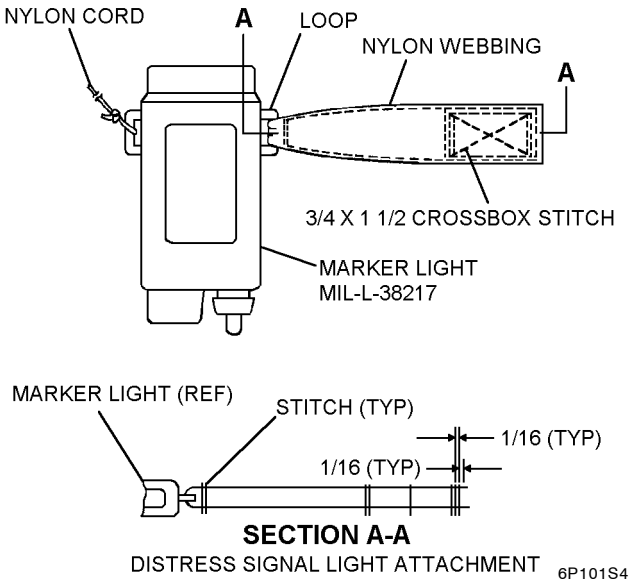

Step 4 - Para 6-115

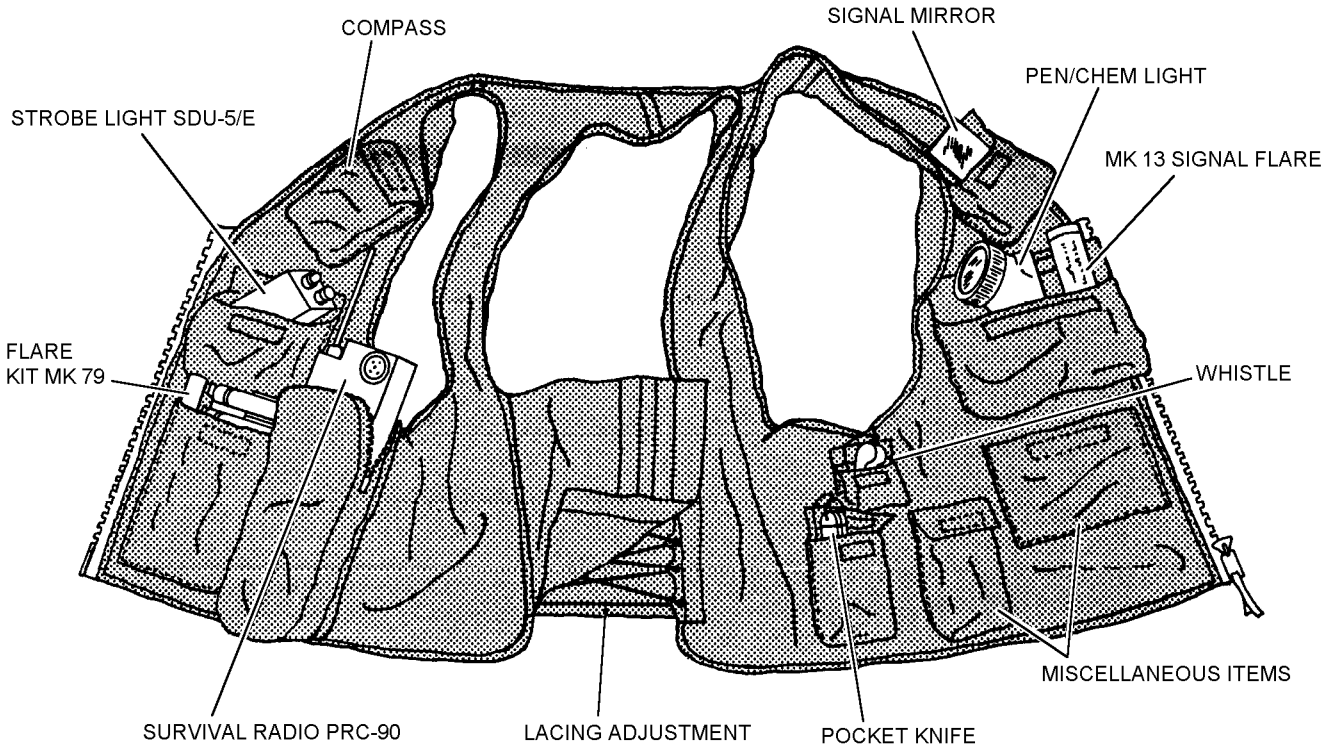

Figure 6-70. Location of Survival Items, CMU-24/P

NOTE

Ensure plastic switch protective cap is removed from actuation switch on marker distress light (SDU-5/E).

5. Install light in pocket, dome end down. Ensure that the tab is positioned toward the center slide fastener and is exposed from the strobe light compartment.

6. Tie a 48-inch length of nylon cord to radio and secure opposite end to loop in pocket using a bowline knot.

7. Ensure volume control of radio is set at maximum output. Loop the antenna of radio and secure it to radio with a rubber band. Insert radio into pocket and close slide fastener.

8. Cut a 60-inch length of nylon cord and sear ends. Tie a bowline knot to eyelet attachment of flare gun from MK-79 MOD 0 distress signal kit. Tie other end of line to loop in pocket using a bowline knot.

WARNING

Pyrotechnics must not be taken to the barracks and, when removed from bandolier, should be returned to original container. Ensure that the flare gun from MK-79 MOD 0 signal kit is empty of flares.

9. Insert signal flare gun into flare gun pocket after complying with NAVAIR 13-1-6.5. Accordion-fold excess length of line and secure it with a lightweight rubber band. Ensure that flare gun is stowed with knurled knob back (cocked position) and empty of flares.

CAUTION

Ensure that protective plastic caps (NIIN 00-324-9158) are installed on flares before installation into webbing keepers.

10. Install signal flare gun flares into webbing keepers.

NOTE

If plastic bandolier is available, it is acceptable to stow it in the CMU-24/P instead of stowing flare cartridges in webbing keepers. Protective plastic caps are not required when bandolier is used.

11. If plastic bandolier is available, secure it to the CMU-24/P as follows:

a. Remove a 48-inch length of cord from bandolier and replace with a 12-inch length of nylon cord and sear ends.

b. Tie a bowline knot to hole provided in one end of bandolier and tie other end to loop in pocket.

12. Prior to installing MK-13 MOD or MK-124 MOD 0 distress signal, cut an 80-inch length of nylon cord and sear ends. Tie an overhand knot in one end. Wrap end of cord two turns around one end of signal flare and tie with a surgeon's knot. Turns of cord shall overlap with all knots positioned snugly against each other. Route cord to opposite end of signal flare and tie in same manner as above. Cord between ties shall be drawn tight. Secure free end of cord to distress signal light grommet with a bowline knot.

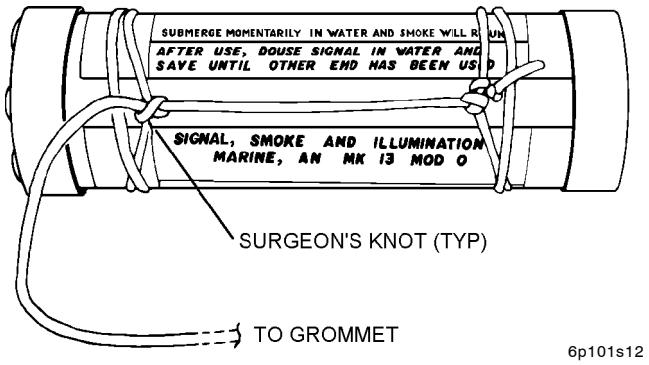

Step 12 - Para 6-115

13. Secure all additional items with a 48-inch length nylon cord and stow in vest balancing weight.

6-116. MODIFICATIONS.

6-117. Repairs and replacements to maintain service ability of the vest are listed in Table 6-8. Repairs other than those listed may be performed at the discretion of the repairing maintenance facility.

6-118. MAINTENANCE.

6-119. Repairs or other maintenance actions required shall be performed at the lowest maintenance level possible. All maintenance actions and inspections shall be documented in accordance with COMNAVAIRFORINST 4790.2.

6-120. SPECIAL INSPECTION.

6-121. The Special Inspection shall be performed by organizational level or above upon issue prior to placing the CMU-24/P in service, and every 90 days thereafter. To perform the Special Inspection proceed as follows:

NOTE

Survival items shall be inspected in accordance with NAVAIR 13-1-6.5, Rescue and Survival Equipment.

1. Visually inspect survival items in accordance with NAVAIR 13-1-6.5.

2. Ensure proper contents are securely fastened to vest.

3. Inspect fabric for cuts, tears, and abrasions.

4. Inspect stitching for security.

5. Inspect hook and pile fasteners for secure attachment and closure.

6. Inspect for presence and security of attachment of survival items.

7. Inspect slide fastener for damage, security, and ease of operation. Inspect thong pull tabs for presence and security of attachment.

8. Verify condition of survival vest.

9. Ensure completion of inspection and that any discrepancies found were corrected.

10. If cleaning is necessary, follow steps listed in paragraph 6-122.

Table 6-8. Repairs/Replacement

Description of Repair/Fabrication	Paragraph
Replacement of Loose or Broken Stitching	Note 1
Repair of Small Holes or Tears	Note 1
Replacement of Hook and Pile Fastener Tapes	Note 2
Replacement of Lacing Cord	6-126
Fabrication of Signal Flare Keeper	6-127

Notes: 1. Broken or loose stitching shall be repaired by restitching.
2. Worn or damaged hook and pile fastener tapes may be repaired using the same type and length of fastener tape.

11. If cleaning is not necessary, repack vest in accordance with paragraph 6-114.

12. Document inspection in accordance with COMNAVAIRFORINST 4790.2.

6-122. CLEANING.

6-123. To clean a CMU-24/P vest, proceed as follows:

Materials Required

Quantity	Description	Reference Number
As Required	Detergent, Laundry	Commercial

1. Mix a proper strength solution of detergent using detergent manufacturer's recommendations.

CAUTION

Ensure that all survival items are removed from vest.

2. Immerse vest in solution and allow to soak for five minutes. Agitate gently for two minutes. Drain, do not wring.

3. Rinse vest in cool, fresh water until all traces of detergent are gone.

CAUTION

Do not use dryer; do not hang in direct sunlight.

4. Hang vest on wooden hanger in a well ventilated area until dry. Do not iron or press.

5. Repack vest in accordance with paragraph 6-114.

6-124. REPAIRS AND REPLACEMENTS.

6-125. Repairs and replacement shall be performed at the lowest level of maintenance possible. Table 6-8 lists the common repairs and fabrications to maintain serviceability.

6-126. REPLACEMENT OF LACING CORD. To replace the lacing cord, proceed as follows:

Materials Required

Quantity	Description	Reference Number
As Required	Cord Polyamide, High Temperature Resistant	MIL-C-81104 NIIN 01-218-8409
As Required	Beeswax	C-B-191 NIIN 00-253-1171 -or- NIIN 00-253-1173
As Required	Paraffin	W-W-95 NIIN 00-285-2048 or equivalent

NOTE

The color of the lacing cord shall approximately match the color of the outershell cloth.

1. Unlace damaged or defective cord and discard.

2. Cut a new length of cord the same length as cord being replaced and dip each cut end into an approximately 50/50 beeswax/paraffin mixture to a depth of 1 inch to prevent fraying.

3. Replace using new cord and refit in accordance with paragraph 6-110.

6-127. FABRICATION OF SIGNAL FLARE KEEPER.

6-128. If a plastic bandolier is not provided with the MK-79 MOD 0 signal kit, it may be necessary to fabricate a keeper for the signal flares. To fabricate a signal keeper, proceed as follows:

Materials Required

Quantity	Description	Reference Number
6 3/4 Inches	Webbing, Nylon, Type IX, 3-Inch Width, Sage Green	MIL-W-4088 NIIN 00-823-8846
6 3/4 Inches	Webbing, Cotton Elastic, Class 1, 1-Inch Width, Black	MIL-W-5664 NIIN 00-263-3600

Materials Required (Cont)

Quantity	Description	Reference Number
60 5/8 Inches	Cord, Nylon, Type I	MIL-C-5040 NIIN 00-240-2154
As Required	Thread, Nylon, High Temperature Resistant, Sage Green	MIL-T-83193 NIIN 00-130-6245
	-or-	
	Thread, Nylon, Type II, Size E, Sage Green	V-T-295 NIIN 00-204-3884

1. Cut webbing and elastic. Sear ends.

2. Position nylon cord on webbing. Stitch, using stitch type 301, 8 to 10 stitches per inch. Backstitch 1/2 inch at ends of stitching.

3. Position elastic on webbing. Stitch with double rows of stitching, 1/16 inch apart, using stitch type 301, 8 to 10 stitches per inch. Backstitch 1/2 inch at ends of stitching.

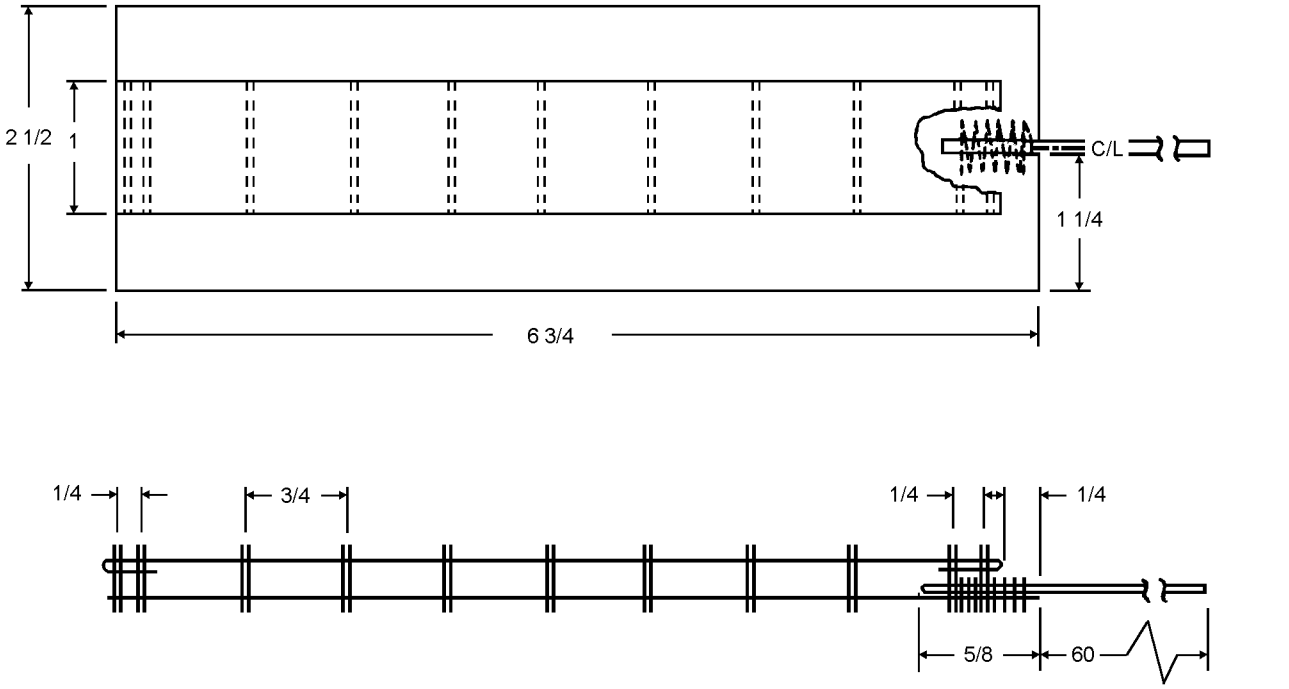

Steps 2 and 3 - Para 6-128

6-129. Installation of radio pocket to accommodate AN/PRC-112B, AN/PRC-149 and AN/PRQ-7 (CSEL) survival radios:

Materials Required

Quantity	Description	Reference Number
1	Pocket, Assembly	829AS146-1
	Stowage, Radio	NIIN 01-275-8735
As Required	Thread, Nylon V-T-295 Size E	NIIN 00-204-3884
As Required	Webbing, Nylon MIL-W-4088 Type VIII	NIIN 00-261-8585

NOTE

All stitching shall be in accordance with ASTM-D-6193 Type 301 lockstitch, 8 - 10 stitches per inch, using size E nylon thread. Overstitch 1 inch wherever possible.

1. Remove all survival items from the survival items pockets and set aside for later re-installation.

CAUTION

Extreme care must be exercised when removing stitching from the vest in order to prevent damaging the mesh material. If the mesh material is damaged refer to Table 6-8.

2. Lay the vest on a flat surface and remove existing radio and pencil flare pocket from left front panel of survival vest. Lay pencil flare pocket aside for later re-attachment and dispose of the radio pocket locally.

3. Remove stitching along the sides of the wearer's left inside pocket in accordance with step 2 of paragraph 6-107.

4. Position new radio pocket on front left side of the vest, with zipper side of the pocket laying directly over the inside pocket's removed row of stitches and below the armhole cutout. Align the bottom of the pocket over the binding tape on the bottom hem of the survival vest. Stitch around all sides of the pocket with one row of E thread stitching, 1/8 inch from the edge of the pocket's binding tape.

5. Reinforce the radio pocket to the vest by stitching a 4 inch length of type VIII nylon webbing, 2-1/2 inches from the top of the inside of the radio pocket using a double cross box "X" stitch.

6. Position the flare kit pocket one inch up from the bottom of the vest and aligned with the inside pocket's stitch line, closest to the vest's zipper, that was removed in step 3. The opposite side of the flare kit pocket should be aligned against the edge of the radio pocket. Stitch the flare pocket in place using a single row of E thread stitches, 1/8 inch from the edge around all sides of the pocket.

NOTE

Due to larger sized radio pocket, flare kit pocket may overlap edge binding tape of the radio pocket on small and medium sized vests. If this is the case, sew flare kit pocket over the radio pocket's edge binding tape, ensuring stitch line isn't sewn into the radio pocket.

7. Re-attach inside pocket in place using single row of E thread stitching. Stitching should be in exact location as before step 3 and should pass through row of stitches attaching the flare kit pocket on one side and through row of stitches attaching the new radio pocket in place below the vest's arm cutout.

8. Re-install survival items in accordance with paragraph 6-115. When installing survival radios into new radio pocket, tie 48 inch length of nylon cord to radio and secure opposite end to two radio pocket grommets using a bowline knot.

9. Quality Assurance:

10. Document maintenance IAW OPNAVINST 4790 Series.

Section 6-5. CMU-29(V)2/P CBR Overvest

6-130. GENERAL.

6-131. The CMU-29(V)2/P CBR Overvest is used to store the pusher fan and filter canister when the A/P22P-14(V)2 thru (V)4 variant Chemical, Biological, and Radiological (CBR) Respirator Assemblies are worn by fixed wing aircrews. The three respirator assembly variants are configured as the A/P22P-14(V)2, Tactical LOX; A/P22P-14(V)3, OBOGS; and A/P22P-14(V)4, Panel Mounted Oxygen Regulator. Each variant consists of the CBR Mask and Lower Assembly. The Lower Assembly consists of an H-manifold, lower hoses (for delivering both air and oxygen), pusher fan subassembly, and C2A1 canister with appropriate plumbing to connect to either LOX, OBOGS, or Panel Mounted oxygen delivery systems.

6-132. CONFIGURATION.

6-133. The CMU-29(V)2/P Overvest is constructed primarily of nylon mesh, nylon straps and nylon cloth. Adjustable shoulder and waist straps along with a front slide fastener provide a means of fitting and securing the vest to the aircrew. Pockets are provided for stowage of pusher fan and filter canister, battery, flashlight, hook blade knife and oxygen regulator. The chest-mounted oxygen regulators shall be located inside a pocket secured to the vest by means of both slide fasteners and, hook and pile tape. The pusher fan and filter canister, and the survival item pockets are shown in Figure 6-71. An interior lay-out of the vest panels and straps are shown in Figure 6-72. The CRU-79 Oxygen Regulator pocket is shown in Figure 6-73, and the CRU-82/P, CRU-88/P and CRU-103/P Oxygen Regulator pocket are shown in Figure 6-74. The Panel Mounted regulator configuration does not use a pocket on the Overvest for the oxygen hose going to the regulator.

6-134. DRAWING INDEX.

6-135. Table 6-9 indicates the drawing number and nomenclature for the CBR Overvest and components.

Table 6-9. CMU-29(V)2/P CBR Overvest Drawings Index

Drawing Number	Nomenclature or Description
3298AS300	Vest Assembly
3298AS320	CRU-79/P Oxygen Regulator Pocket
3298AS330	CRU-82/P, CRU-88/P or CRU-103/P Oxygen Regulator Pocket

6-136. APPLICATION.

6-137. The CMU-29(V)2/P Overvest is designed for fixed wing aircrews when the A/P22P-14(V)2 thru (V)4 CBR Respirator Assembly variants are required to be worn. The CBR Overvest is worn over either the SV-2B Survival Vest, CMU-331P Survival Vest, or the ACC 380 Integrated Torso Harness to stow the CBR Respirator Assembly pusher fan and filter canister, and various survival items. The illustrations and procedures contained in NAVAIR 13-1-6.10, Special Mission Aircrew Equipment, should be used in conjunction with the illustrations and procedures in this manual to properly integrate the A/P22P-14(V)2 through (V)4 CBR Respirator Assemblies with the CMU-29(V)2/P CBR Overvest. The specific equipment worn by each aircrewmember is specified in the NAVAIR 13-1-6 Series Aviation-Crew Systems manuals.

6-138. INSTALLATION.

6-139. INSTALLATION OF A/P22P-14(V)2 THRU (V)4 CBR RESPIRATOR ASSEMBLIES. For installation of the A/P22P-14(V)2 thru (V)4 CBR Respirator Assemblies into the CMU-29(V)2/P CBR Overvest, proceed as follows:

NOTE

Refer to NAVAIR 13-1-6.10 manual for the configuration of the lower assembly, to include the pusher fan, filter canister, oxygen regulator and oxygen regulator hose for the A/P22P-14(V)2 through (V)4 variants.

1. Place the vest on a clean dry surface with the larger panel, bearing the canister and battery pockets, facing up and the slide fastener on the left.

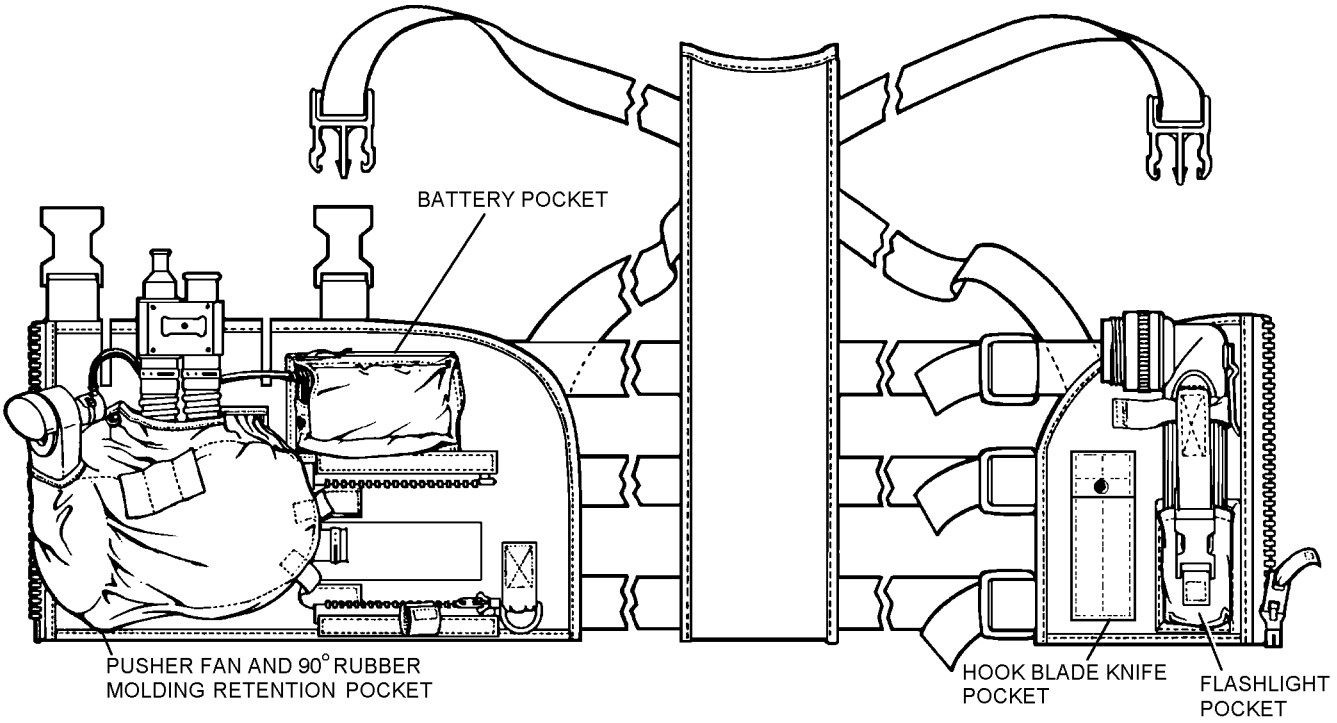

6-40

Figure 6-71. CMU-29(V)2/P CBR Overvest

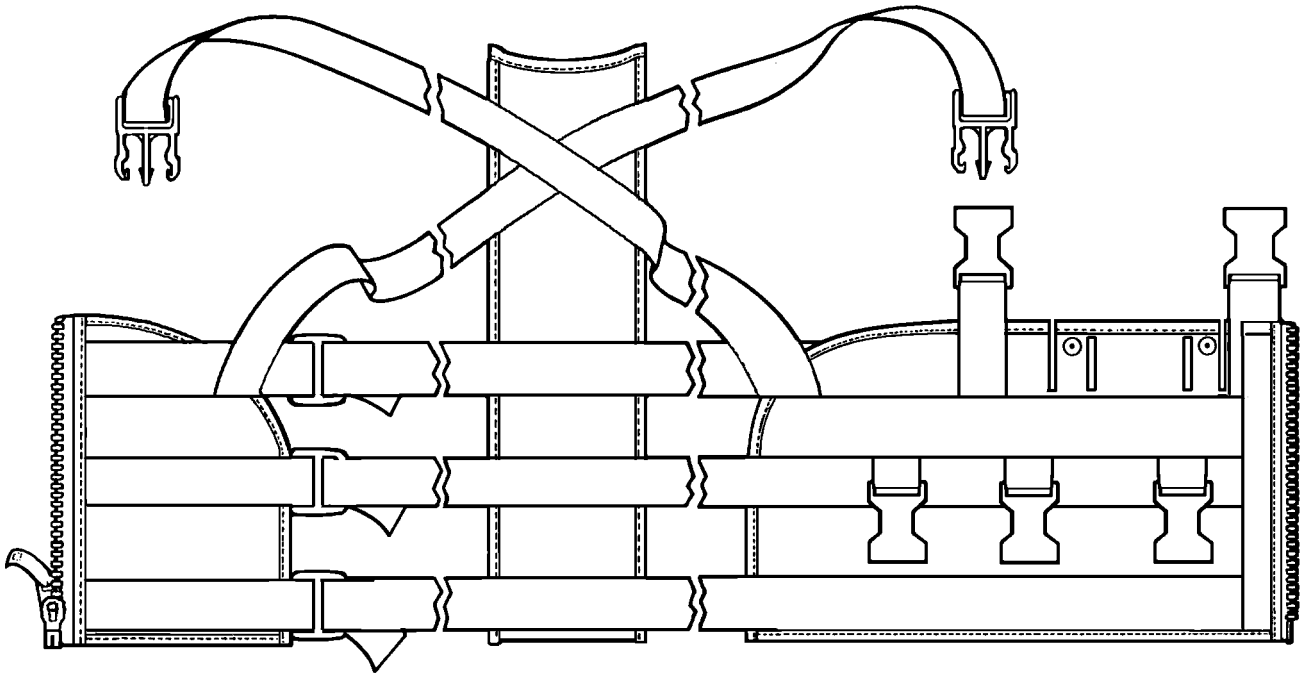

6-41

Figure 6-72. CMU-29(V)2/P CBR Overvest, Interior View

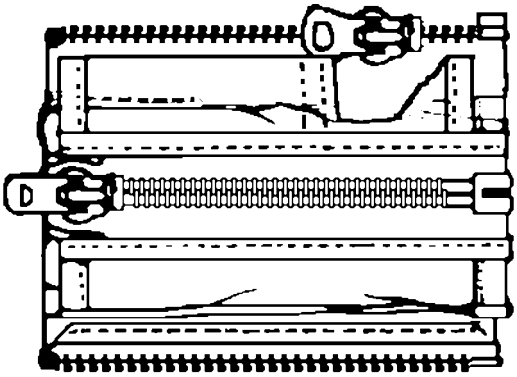

6-42

Figure 6-73. CRU-79/P Oxygen Regulator Pocket, P/N 3298AS320-1

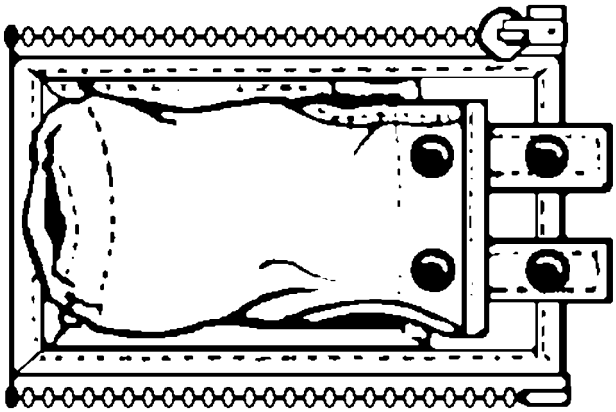

6-43

Figure 6-74. CRU-82/P, CRU-88/P, and CRU-103/P Oxygen Regulator Pocket P/N 3298AS330-1

2. Stow the 90° rubber molding into the retention pocket. Route the regulator hose or connector through the small hole in the retention pocket. Stow the pusher fan subassembly in the retention pocket. Ensure the cable tie is connected directly below the neck of the pusher fan.

3. Close the pocket slide fastener and insert the tab bearing a snap fastener stud through the loop in the slide pull thong.

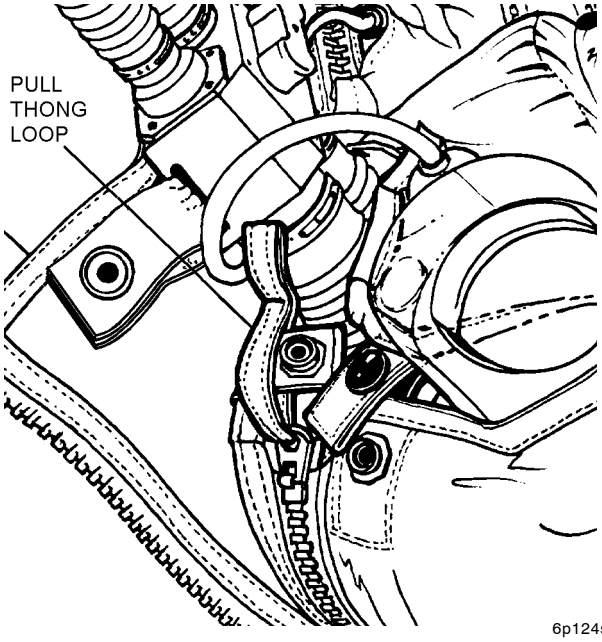

6p124s3

Step 3 - Para 6-139

4. Secure in place with the snap fastener socket set in the pocket fabric. Secure the remaining snap fastener.

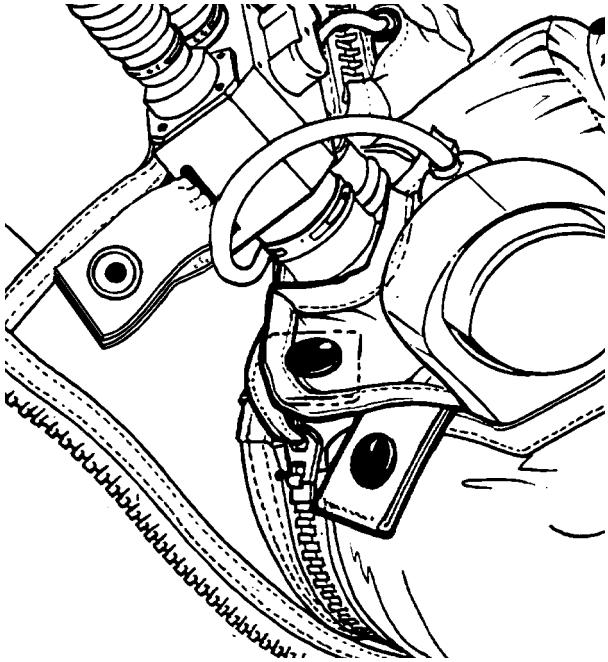

6p124s4

Step 4 - Para 6-139

5. Reeve the snap fastener tabs on the H-manifold through the slots in the overvest and mate them to the snap fastener studs on the other side of the panel.

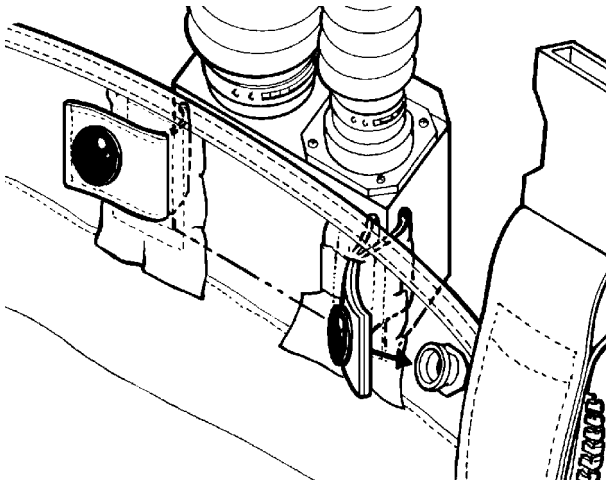

6p124s5

Step 5 - Para 6-139

6. Route the pusher fan power cable under the H-manifold hoses toward the battery pocket. Plug the power cable into a battery, stow and secure the battery in the pocket.

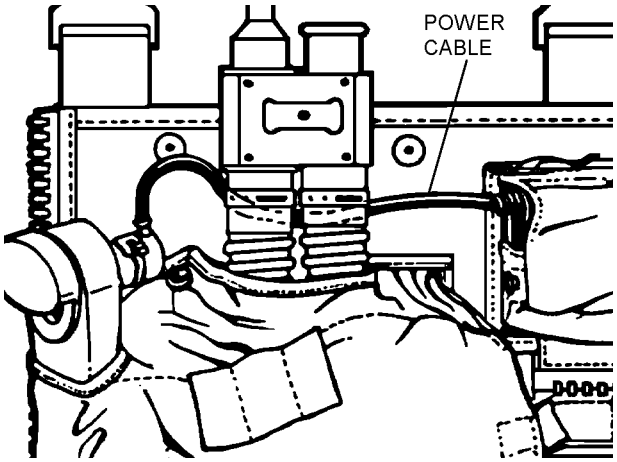

6p124s6

Step 6 - Para 6-139

6-140. INSTALLATION OF CRU-79/P OXYGEN REGULATOR. To install the CRU-79/P oxygen regulator, proceed as follows:

1. To accommodate the larger CRU-79/P Regulator, cut the rows of stitching on the regulator pocket interior closest to the slider and unfold.

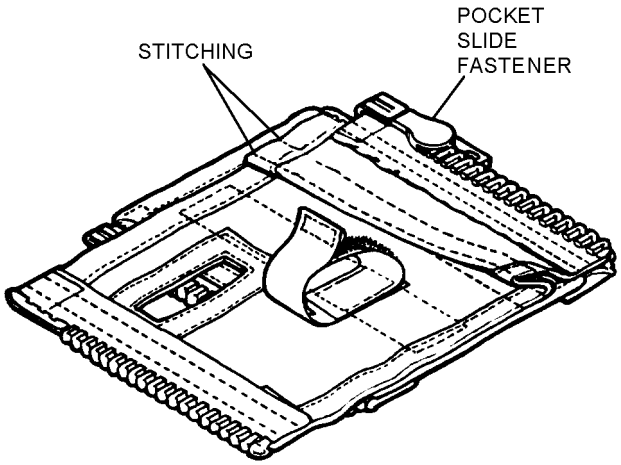

6p125s1

Step 1 - Para 6-140

2. To install the CRU-79/P regulator in its pocket, pass the seat kit hose quick-disconnect through the inside rectangular opening. Pull the hose through the opening until the communications connector and 90° elbow are on the outside. Attach the regulator to the hose using the appropriate low profile clamp.

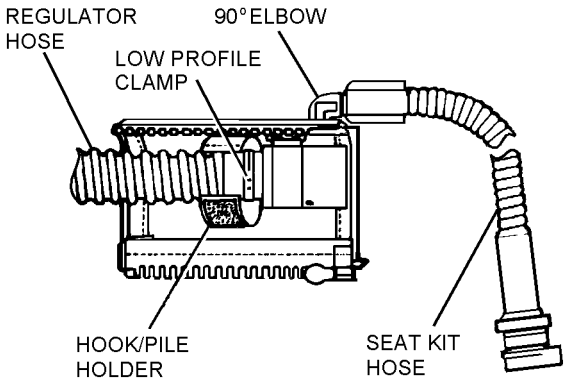

6p125s2

Step 2 - Para 6-140

3. Secure the hook and pile tape around the regulator outlet, then close the slide fastener.

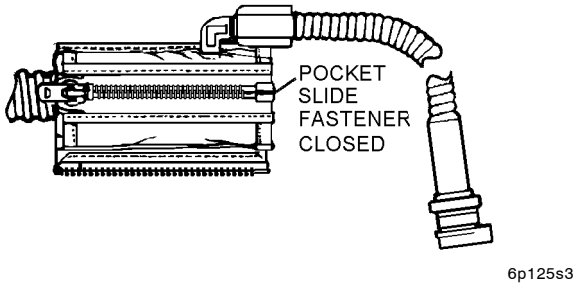

Step 3 - Para 6-140

4. Secure the regulator pocket to the vest by engaging the slide fasteners on the vest and pocket.

5. Orient the oxygen hose and leave it free as shown.

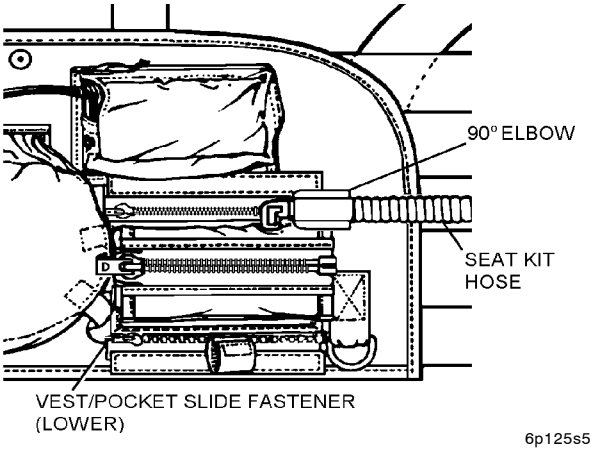

Step 5 - Para 6-140

6. To accommodate an individual with a shorter torso, it may be necessary to route the regulator hose under the retention pocket snaps.

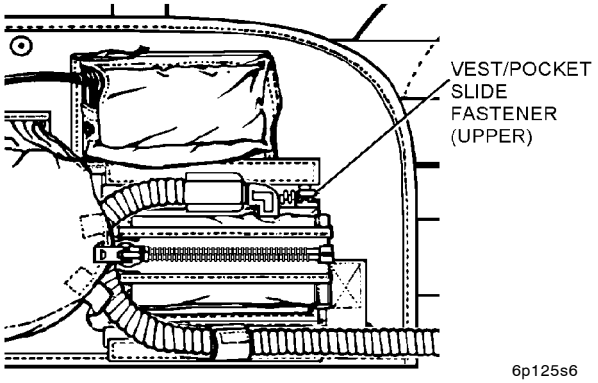

Step 6 - Para 6-140

6-141. INSTALLATION OF CRU-82/P, CRU-88/P OR CRU-103/P OXYGEN REGULATOR. To install the CRU-82/P, CRU-88/P or CRU-103/P oxygen regulator, proceed as follows:

1. Lay out the regulator pocket with the circular opening for the regulator outlet on the left, the snap fastener pull tabs on the right, and the hook fastener facing down.

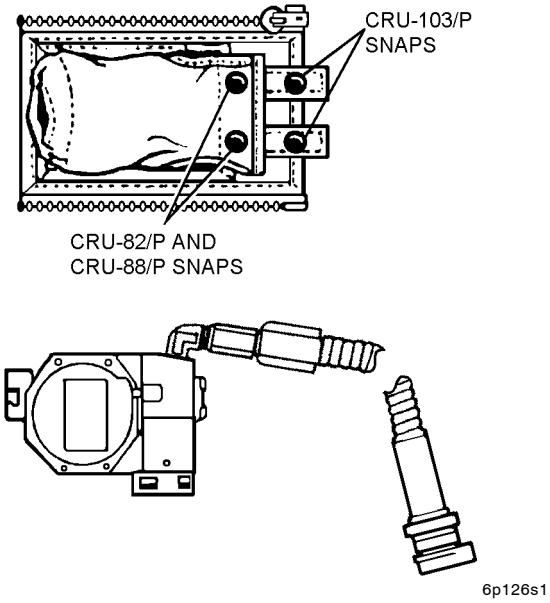

Step 1 - Para 6-141

2. Attach the 90° elbow to the seat pan oxygen hose and the regulator.

NOTE

For the CRU-82/P and CRU-88/P Regulators, use the 90° elbow that comes with the CBR Respirator Assembly. For the CRU-103 Regulator OBOGS application, use the 90° elbow that comes with the Respirator Assembly. For the 103/P Regulator LOX application, use the 90° elbow that is removed from the CRU-79/P.

3. Insert the CRU-82/P, CRU-88/P or CRU-103/P regulator into the pocket outlet end first, and with the identification plate facing up. Ensure that the outlet extends through the opening completely, exposing the slots for engaging the pins on the MS27796 connector. Engage the snap fastener and hook and pile closures.

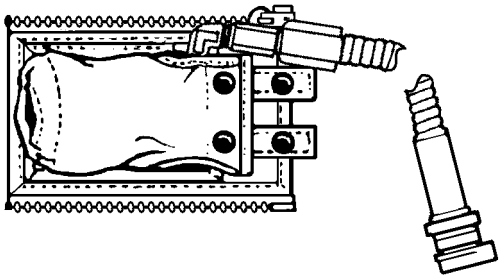

6p126s3

Step 3 - Para 6-141

4. Attach the regulator pocket to the vest by means of the slide fasteners. Orient the oxygen hose and leave it free as shown.

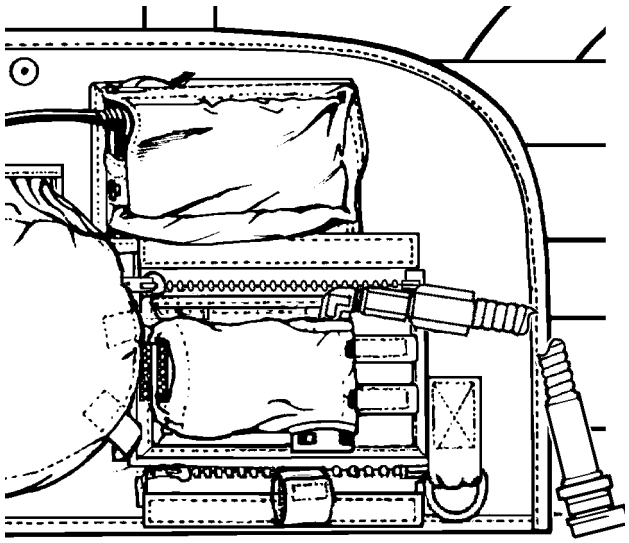

6p126s4

Step 4 - Para 6-141

5. Connect the CRU-82/P, CRU-88/P, or the CRU-103 Regulator to the 3-Pin Bayonet Connector.

6-142. INSTALLATION OF FLASHLIGHT AND HOOK BLADE KNIFE. To install the flashlight into CMU-29(V)2/P CBR Overvest, proceed as follows:

1. Insert a cable tie, of adequate length, through the flashlight retention strap.

2. Route cable tie around the neck of the flashlight and underneath the metal clip.

3. Insert flashlight through vest strap into flashlight pocket and secure with the plastic buckle. Position flashlight with lens pointed outward.

4. Remove hook blade knife from the survival vest or harness, as applicable, and install in the overvest hook blade knife pocket. Tether the knife to the grommet on the overvest knife pocket.

6-143. FITTING.

6-144. The CMU-29(V)2/P CBR Overvest comes in one size and is designed to fit all aircrewmember sizes by adjusting the shoulder straps and waist straps as required to fit each individual. To fit the CBR Overvest, proceed as follows:

NOTE

For proper fit, adjustments must be made in both standing and sitting positions.

1. Don all normal flight equipment and ensure the torso harness and survival vest have been properly fitted to the individual aircrewmember.

2. Fit and integrate CMU-29(V)2/P CBR Overvest to the survival vest and life preserver unit.

NOTE

The A/P22P-14(V)2 or (V)3 Respirator Assemblies shall be installed into the CMU-29(V)2/P overvest in accordance with paragraph 6-139 prior to performing following steps.

The flight suit, torso harness and BTN clothing shall be donned in accordance with NAVAIR 13-1-6.10, prior to performing the following steps.

a. If using CMU-33/P, Type II vest, first remove radio pocket.

b. Don survival vest and life preserver in accordance with paragraph 6-16 or NAVAIR 13-1-6.7-4.

c. Don A/P22P-14(V)2 or (V)3 Respirator Assembly. Ensure Pusher Fan is turned on. Refer to NAVAIR 13-1-6.10 for proper fitting procedures.

d. Don CMU-29(V)2/P Overvest. Position it to permit unrestricted head rotation and to eliminate cockpit controls interference.

NOTE

If using LPU-36/P, route tie downs through clearance slots on CMU-29(V)2/P Overvest.

e. Install CMU-29(V)2/P Overvest windblast retention straps (see Figure 6-75). For use with CMU-33/P vest, position straps on loops of CMU-33/P vest to ensure alignment for an in-line pull. Connect both halves of retention strap. For use without CMU-33/P, secure windblast retention straps directly to torso harness D-rings. Adjust straps for slight tension.

f. Route excess strap through tri-lock and secure by tacking using waxed 6 cord 1 turn double. Ensure tacking passes through all straps and around tri-lock center bar. Tie off tacking using a surgeon's knot followed by a square knot (see Figure 6-75).

g. If using CMU-33/P, Type II vest, reinstall radio pocket on CMU-33/P vest. Ensure one windblast retention strap is located behind radio and is accessible for doffing.

3. With the overvest ideally positioned, adjust the shoulder straps and waist straps for a snug but comfortable fit.

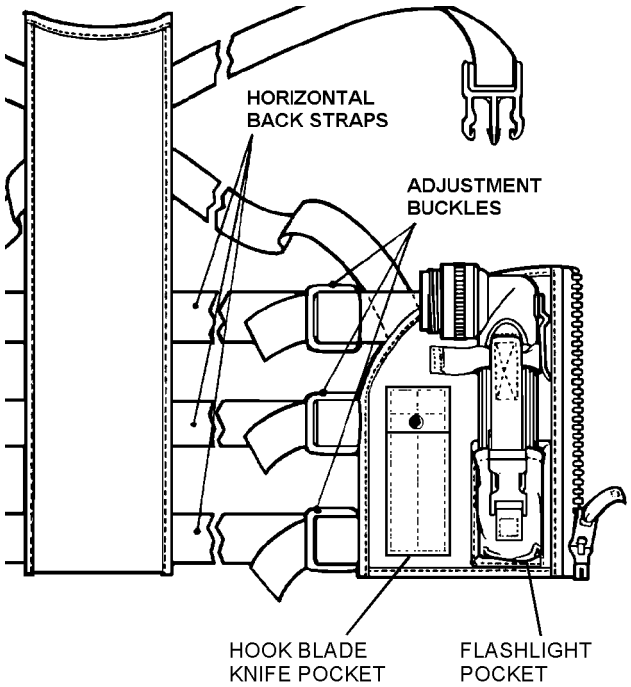

Step 3 - Para 6-144

4. After adjusting the horizontal back straps, reeve the free end of the straps back through the friction adapter.

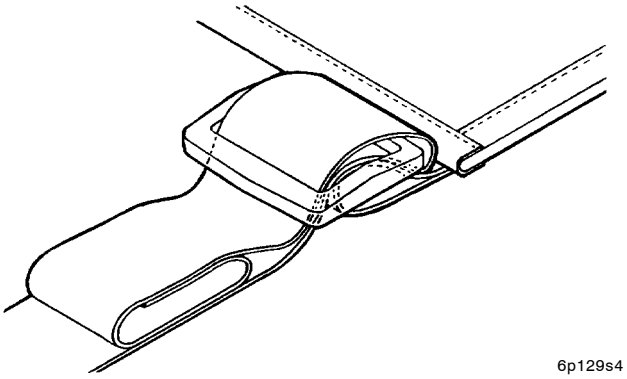

Step 4 - Para 6-144

5. Using a nonpermanent marker, such as tailors' chalk, make reference marks on the straps to mark their position in case the straps loosen while the aircrewmember is doffing the vest.

6. After the aircrewmember has doffed the vest, verify the position of the straps relative to the marks made in the previous step and adjust as necessary.

7. Tack all straps with one turn of waxed nylon 6 cord, single, passing the 6 cord through the webbing and around the crossbar of the friction adapter. Tie off using a surgeon's knot followed by a square knot. Sear the ends or use an overhand binder knot.

8. Fold the free ends of the straps over in 1 1/2 to 2 inch folds and tack down with one turn of waxed nylon 6 cord, single. Tie off using a surgeon's knot followed by a square knot. Sear the ends or use an overhand binder knot.

6-145. MODIFICATIONS.

6-146. There are no modifications for the CBR Overvest.

6-147. MAINTENANCE.

6-148. Repairs or other maintenance actions required shall be performed by organizational level or above. All maintenance actions and inspections shall be recorded on the appropriate form in accordance with COMNAVAIRFORINST 4790.2.

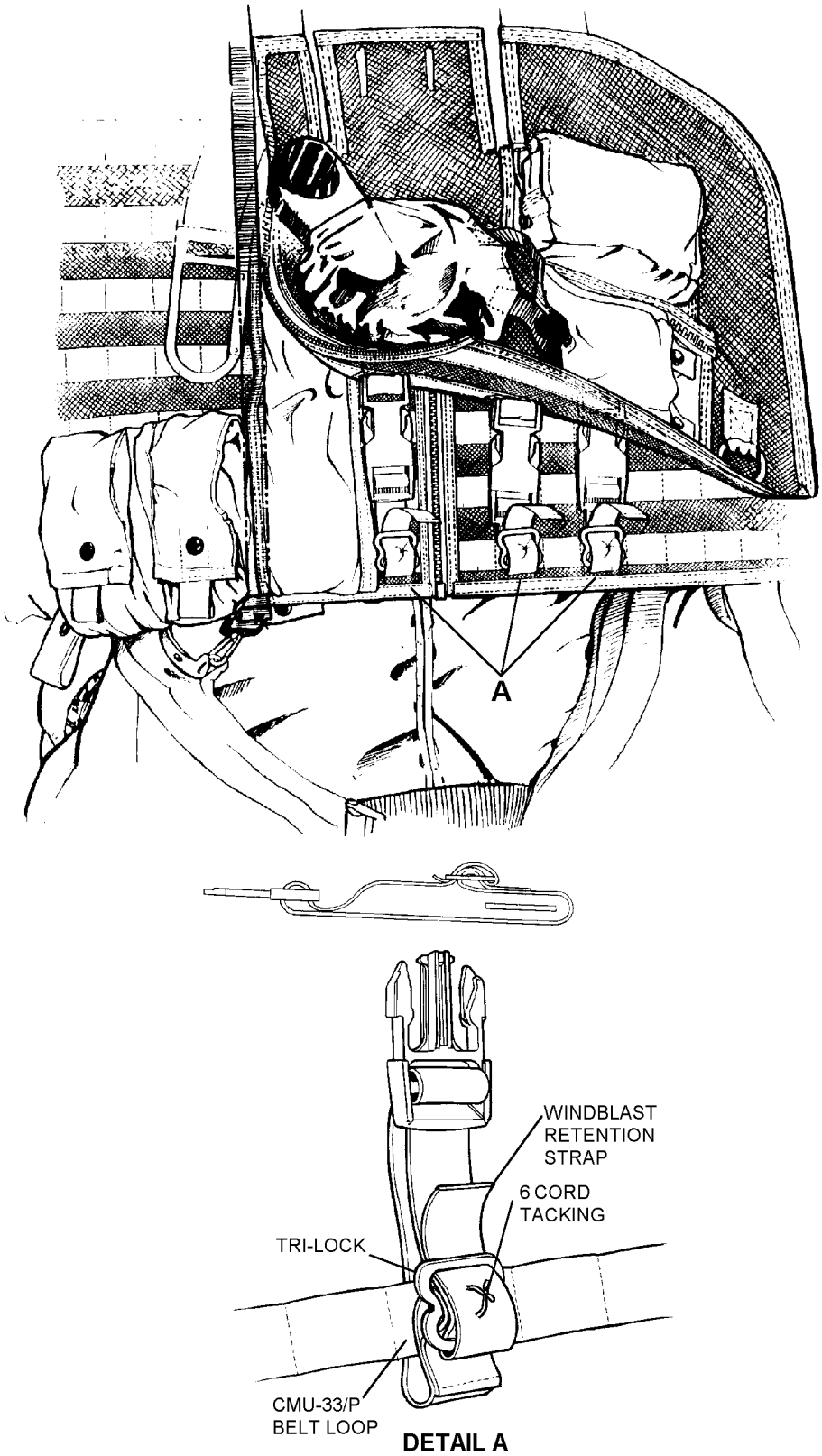

6-44

Figure 6-75. CMU-29(V)2/P Overvest Integration with CMU-33/P Vest and Torso Harness

6-149. PLACE-IN-SERVICE AND SPECIAL INSPECTION. The Place-In-Service and Special Inspections are visual inspections to be performed at O-level or above in accordance with paragraph 6-150. The inspection shall be performed prior to placing the overvest in service and every 90 days thereafter. The 90-day Special Inspection may be waved when the vest is being stored for extended periods of time under controlled conditions. However, an inspection shall be required prior to use after storage.

6-150. Visual Inspection. The visual inspection of the CMU-29/P(V)2/P CBR Overvest shall be performed as follows:

1. Visually inspect survival items in accordance with the applicable chapter of NAVAIR 13-1-6.5.

2. Inspect cloth and webbing for cuts, tears, fraying and contamination.

3. Inspect stitching for security.

4. Inspect hook and pile tape for damage and security.

5. Inspect slide fasteners for damage, security, and ease of operation. Inspect thong pull tabs for presence and security of attachment.

6. Inspect hardware for security, corrosion, dents, burrs, distortion, sharp edges and ease of operation, as applicable.

7. If cleaning is necessary, proceed to paragraph 6-151.

8. Ensure all discrepancies have been corrected.

9. Repack survival items as required.

10. Record inspection date and signature of inspector in accordance with COMNAVAIRFORINST 4790.2.

6-151. CLEANING. To clean vest, proceed as follows:

Materials Required

Quantity	Description	Reference Number
As Required	Laundry Detergent	Commercial

1. Remove all CBR components and survival items.

2. Mix proper strength solution of detergent using manufacturer's instructions.

3. Immerse overvest in solution and allow to soak for five minutes. Agitate gently for two minutes. Drain, but do not wring out vest material.

4. Rinse in cool, clean water until all traces of detergent are gone.

CAUTION

Do not use clothes dryer or hang in direct sunlight.

5. Hang overvest by shoulder straps to air dry.

6-152. REPAIRS AND REPLACEMENTS. Repairs and replacements will be performed at O-Level or above. Table 6-10 lists the common repairs and replacements to maintain serviceability.

Table 6-10. Repair/Replacement

Description of Repair or Replacement	Paragraph Number
Replacement of loose or broken stitching	Note 1
Repair of small holes or tears	Note 1
Replacement of hook and pile fastener tapes	Note 2
Replacement of snap fasteners	Note 3

Notes:
1. Broken or loose stitching shall be repaired by restitching using stitching Type 301, 8 to 10 stitches per inch, with thread conforming to MIL-T-83193, size E, sage green (NIIN 00-130-6245) or V-T-295, size E, sage green (NIIN 00-204-3884). Backstitch 1/2 inch on all ends of stitching.
2. Worn or damaged hook and pile fastener tapes may be repaired using the same type and length of fastener tape. Remove damaged tape and stitch new tape in position of original tape, using a single row of stitching 1/8 inch from all edges, stitch Type 301, 8 to 10 stitches per inch, with thread conforming to V-T-295, size E, sage green (NIIN 00-204-3884). Hook and pile tape on vest is 1 or 1 1/2 inches wide.
3. Broken or missing snap fastening devices may be repaired using the same type of snap fastener. Refer to the applicable paragraph to determine the correct choice. Remove broken snap, if applicable, and attach new stud and eyelet in original position. Snap fasteners on either side of the slide fastener should be reinforced with a 14 X 1-inch strip of MIL-T-5038 Type III nylon tape sewn on the backside.

THIS PAGE INTENTIONALLY LEFT BLANK.

CHAPTER 7

HELICOPTER AIRCREW SURVIVAL AND ARMOR PROTECTIVE ASSEMBLY A/P22P-15

Section 7-1. Description

7-1. GENERAL.

7-2. During the Vietnam War it became apparent that helicopter aircrewmembers needed body armor protection while flying over hostile territory. However, this requirement could not be satisfied at that time because available T-65 body armor was not compatible with the aircrewmember's survival vest/life preserver combination. This led to the development of the Helicopter Aircrew Survival and Armor Protective Assembly, a fully integrated survival vest, flotation assembly, and hard and soft small arms protective body armor. The Helicopter Aircrew Survival and Armor Protective Assembly can provide protection, both front and back, for the vital organs of the aircrewmember's torso against armor-piercing rounds up to .30 caliber. This armor is also fully compatible with the CMU-30/P22P-15 survival vest and the LPU-21/P life preserver. The Helicopter Aircrew Survival and Armor Protective Assembly has been designed to provide one-hand, two-operation quick disconnect of the hard armor plates. The soft armor assembly can be worn in combination with the other A/P22P-15 components to provide small arms and fragmentation protection. Specifically, the soft armor provides protection Type IIIA, which is a National Institute of Justice (NIJ) standard of protection against small arms such as .44 Magnum and 9mm. The hard armor provides Type IV protection, or up to .30 caliber armor-piercing bullets.

7-3. CONFIGURATION.

7-4. Components required to assemble the A/P22P-15 are the CMU-30/P22P-15 survival vest, PRU-60/P22P-15 or PRU-60A/P22P-15 small arms protective soft body armor, PRU-61/P22P-15 or PRU-61A/P22P-15 small arms protective hard body armor, and LPU-21/P life preserver.

1. The survival vest comes with all the accompanying pockets for survival gear. However, the individual survival items must be obtained separately. Repair and fabrication of any part of the entire ensemble is limited to those materials and procedures found in this chapter. However, if the soft armor ballistic inserts (black pouches) or the hard armor ballistic inserts are damaged, they must be returned to the manufacturer or discarded, as appropriate. Both the PRU-60/P22P-15 small arms protective soft body armor and the PRU-61/P22P-15 small arms protective hard body armor, but not the CMU-30/P22P-15 survival vest, can be obtained, in all sizes, thru the GSA schedule from the manufacturer, Protective Materials Company, Tel: 305-820-4414.

2. The small arms protective soft body armor is available as a complete assembly consisting of front, back and side panels and the H-harness. If desired, the front soft body armor subassembly, which consists of the front soft armor and its casing, may also be requisitioned. The H-harness allows the wearer to wear only the front soft armor without the supporting back soft armor and its accompanying straps. The side soft armor panels may also be requisitioned separately. If replacement of casing or H-harness is necessary, either can be fabricated at I-level maintenance.

3. The small arms protective hard body armor is also available as a complete assembly consisting of the front hard armor plate and its accompanying beaded pull-handle, and the back hard armor plate including the connecting quick release and back armor retaining straps. Replacements for the front or back hard armor plates may be obtained through supply channels. However, if replacement of the beaded pull-handle, any of the straps or the front and back hard armor insert encasement are required, they must be fabricated. Authorized fabrication of required replacements shall be performed by I-level maintenance using materials and instructions in this chapter.

7-5. Sections 7-2 and 7-3 address the CMU-30/P22P-15 survival vest and the body armor, respectively. See NAVAIR 13-1-6.1-2, for LPU-21/P maintenance procedures.

Section 7-2. CMU-30/P22P-15 Survival Vest

7-6. GENERAL.

7-7. The CMU-30/P22P-15 survival vest (Figure 7-1) is designed specifically for helicopter aircrews and is compatible with the LPU-21/P life preserver and soft and hard armor (PRU-60/P22P-15 or PRU-60A/P22P-15 and PRU-61/P22P-15 or PRU-61A/P22P-15). The survival equipment pockets are modular so location of survival items may be changed, but to ensure safety of flight and configuration control, changes to pocket configuration must be approved by the type commander.

NOTE

When PRU-61/P22P-15 or PRU-61A/P22P-15 small arms protective hard body armor is not in use, store in accordance with paragraph 7-80.

7-8. CONFIGURATION.

7-9. The CMU-30/P22P-15 survival vest is constructed of fire retardant nylon mesh fabric with woven nomex pockets that are attached to the vest with directional snap fasteners and hook-and-pile tape. The vest has a slide fastener on the front. When the hard armor is worn in front, the slide fastener is engaged for no more than two inches and the armor-release beaded pull handle is used as an alternate front closure. See Section 7-3 or NAVAIR 13-1-6.7-4 if using PRU-60A/P22P-15 or PRU-61A/P22P-15.

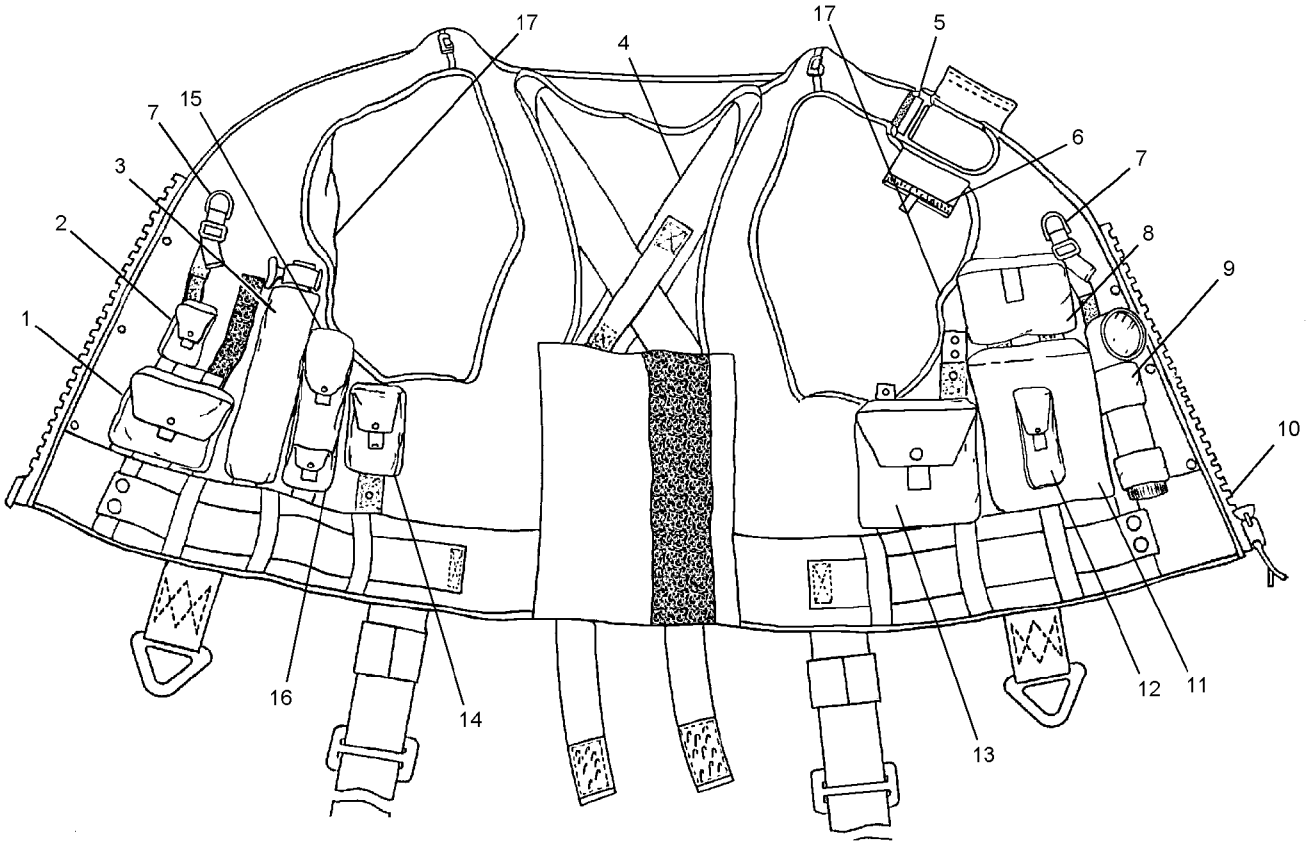

1 SRU-31/D MEDICAL KIT
2 STROBE LIGHT
3 HEED
4 HOISTING HARNESS
5 GATED D-RING
6 D-RING COVER
7 COLLAR LOBE ATTACHMENT
8 PENGUN FLARE SIGNAL KIT
9 FLASHLIGHT
10 SLIDE FASTENER
11 RADIO POCKET
12 CHEMLITE
13 SEA DYE MARKER
14 DAY/NIGHT FLARE
15 SURVIVAL KNIFE
16 MIRROR, WHISTLE, COMPASS
17 WATER AND OPTIONAL POCKET (INSIDE VEST - NOT SHOWN)

Figure 7-1. CMU-30/P22P-15 Survival Vest

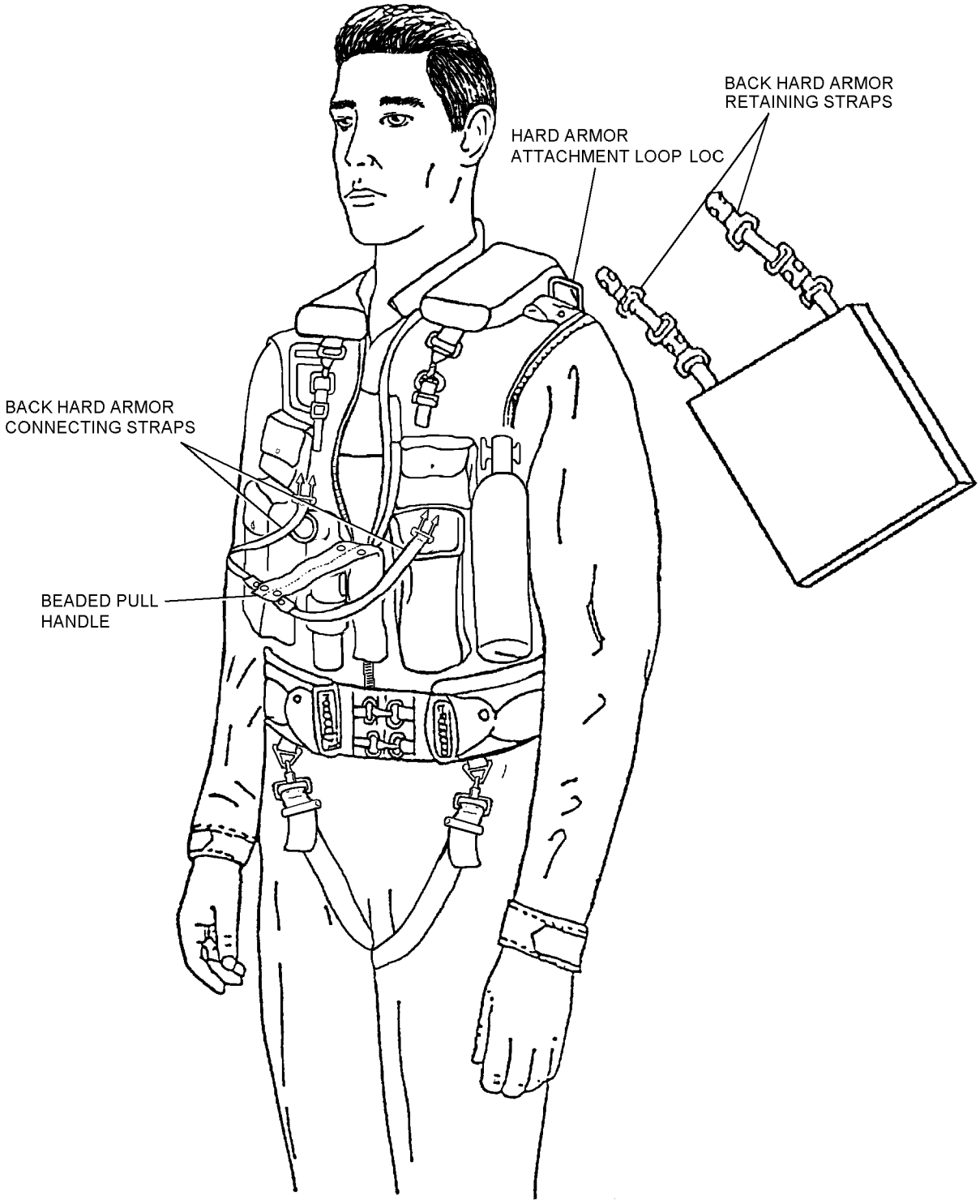

7-2

Figure 7-2. Survival Vest with Hard Ballistic Armor Plates

7-10. APPLICATION.

7-11. The CMU-30/P22P-15 is designed for use by helicopter aircrews in conjunction with the aircrew armor assembly when operating in hostile territory. The CMU-30/P22P-15 may also be worn with only the soft armor or as a survival vest without any armor.

7-12. FITTING.

7-13. The CMU-30/P22P-15 vest is worn with the aircrew armor assembly, standard military personal equipment, and the LPU-21/P life preserver. The vest is available in two sizes, medium (32 - 40 inches), and large (40 - 48 inches).

7-14. RIGGING AND PACKING.

7-15. Refer to NAVAIR 13-1-6.7-1, for survival items to be stowed in the CMU-30/P22P-15 Survival and Armor Protective Assembly. Table 7-1 lists additional survival items recommended for the CMU-30/P22P-15. Rig and pack the CMU-30/P22P- 15 survival vest as follows:

Materials Required

Quantity	Description	Reference Number
As Required	Cord, Nylon, Type I (with core strands removed) or Type IA (coreless)	MIL-C-5040 NIIN 00-240-2154 NIIN 00-292-9920 or 00-531-2813
As Required	Webbing, Textile, Nylon, Type II, Yellow, 1-Inch	MIL-W-4088 NIIN 00-262-1643
As Required	Rubber Bands	—

Table 7-1. Additional Survival Items

Item	P/N	Qty
Compass	Silva 27 or equivalent	1
Battery, Radio, PRC-90	303654A (CAGE 90303) NIIN 00-838-0706	1

Table 7-1. Additional Survival Items (Cont)

Item	P/N	Qty
Battery, Strobe Light SDU-5/E	BA-1574/U (CAGE 90303) NIIN 00-073-8939	1
Spark Lite	SL3 (CAGE IMP49) NIIN 01-223-0061	1
Lights, Chemical, Four-Inch	95270-16 (CAGE 83289) NIIN 00-106-7478	2
-or-		
High Intensity	95270-52 (CAGE 83289) NIIN 01-074-4229	2
Flashlight, Right Angle	MIL-F-3747 M7-991/U NIIN 00-264-8261	1
Batteries, Type D Alkaline	MIL-B-49030/1 (CAGE 81349) NIIN 00-835-7210	2

WARNING

Additional items may be added to the CMU-30/P22P-15 at the discretion of the aircrewmember. However, no items shall be added which will cause the total weight of the added survival items to exceed five pounds. Each additional item shall be secured to its CMU-30/P22P-15 pocket with a 48-inch length of nylon cord. All items shall be stowed in a manner which will maintain an equal weight balance of the vest (see OPNAVINST 3710.7).

NOTE

If weapon is to be carried, use the leather shoulder holster P/N 7791527.

1. Ensure that all survival equipment has been inspected in accordance with the applicable sections of NAVAIR 13-1-6.5.

2. Lay out vest and survival items on a clean table. Ensure modular pockets are securely attached (all snaps are engaged) to the vest in the proper locations (see Figure 7-1).

NOTE

Refer to Glossary for instructions for tying bowline knot.

Unless otherwise specified, all items shall be secured to the vest using a bowline knot and a 48-inch length of nylon cord. Sear cut ends of the cord to prevent fraying. Secure the remaining line with a lightweight rubber band and stow in vest pocket with survival items.

If the SDU-39/N Distress Strobe Light is used, the nylon cord shall be passed through the hole below the ON/OFF switch of the SDU-39/N and through the loop formed by the folded end of the lanyard. Refer to paragraph 7-51 for fabrication and installation of the SDU-39/N lanyard.

3. (SDU-5/E Only). Sear cut a 12-inch length of 1-inch webbing (MIL-W-4088) and feed one end through loop on SDU-5/E distress marker light and draw ends even. Sew webbing together by stitching a single row 1/8-inch from edge around all edges and as close as possible to the light's loop. Double stitch across webbing next to loop. Cross boxstitch open end.

a. Tie one end of a 48-inch length of nylon cord to the SDU-5/E strobe light and the other end to the two grommets of the pocket in which the light is stowed.

NOTE

Ensure plastic switch protective cap is removed from actuation switch on distress strobe light (SDU-5/E).

b. Install light in pocket with dome end down.

4. Tie a 48-inch length of nylon cord to PRC-90 radio and secure opposite end to grommets in radio stowage pocket using a bowline knot.

a. Ensure volume control of radio is set at maximum output.

b. Loop the antenna of radio and secure it to radio with a rubber band. Insert radio into pocket and close slide fastener.

5. Sear cut a 60-inch length of nylon cord. Using a bowline knot, tie one end of cord to attachment eyelet of MK79 MOD 0 or Personal Distress Signal Kit replacement. Tie the other end of line to grommets in proper pocket using bowline knot.

WARNING

Refer to NAVSEA SW-050-050-AB-NNA-010 for safety precautions, handling and storage procedures.

a. Inspect signal kit in accordance with NAVAIR 13-1-6.5.

b. Stow signal projector in vest pocket ensuring projector is empty of flares and knurled knob is in cocked position.

c. Accordion-fold excess length of line, secure it with a lightweight rubber band, and stow with projector.

6. Stow flares for distress signal projector in plastic bandolier which is secured to CMU-30/P22P-15 as follows:

a. Replace 48-inch length of cord attached to bandolier with a 12-inch length of searcut nylon cord.

b. Secure cord to hole in one end of bandolier using a bowline knot and tie other end to grommets of pengun flare signal kit pocket.

7. Stow MK-13 MOD 0 (or MK-124 MOD 0) Smoke and Illumination Signal Flare as follows:

a. Searcut an 80-inch length of nylon cord and tie an overhand knot in one end.

b. Wrap end of cord two turns around one end of signal flare and tie with a surgeon's knot. Turns of cord shall overlap with all knots positioned snugly against each other.

c. Route cord to opposite end of signal flare and tie in same manner. Cord between ties shall be drawn tight.

d. Secure free end of cord to grommet in day/night flare pocket with a bowline knot.

8. Secure all additional items with 48-inch lengths nylon cord and stow in vest in a manner to ensure equal balance of total weight of vest and survival items.

9. Fit and adjust the leather shoulder holster in accordance with paragraph 6-25B, steps 1 through 4.

7-16. INSTALLING THE LPU ONTO THE CMU-30/P22P-15 SURVIVAL VEST. To install the LPU-21 Life Preserver to the CMU-30/P22P-15, proceed as follows:

Materials Required

Quantity	Description	Reference Number
As Required	Insulation Sleeving, Electrical	MIL-I-23053/5 NIIN 00-815-1300

1. Reeve waist belt of CMU-30/P22P-15 through waist loops of LPU-21 life preserver and waist loops of CMU-30/P22P-15.

2. Snap the survival vest waist belt snap fasteners to secure the LPU-21 to the survival vest.

3. Cut two pieces of the electrical insulation sleeving, (heat shrink) Part No. MIL-I-23053/5, 2.75 inches in length.

4. Slide one piece of the heat shrink cut in step 3 over one of the D-rings of the survival vest attachment strap and connect the life preserver snap hook to the D-ring.

5. Slide the heat shrink up and over the life preserver snaphook, ensure the heat shrink butts against the shank (base) of the snap hook.

CAUTION

Ensure heat from the heat gun is not directed to the bladder of the life preserver. Testing has indicated direct heat from the heat gun will not harm the bladder, but it shall be avoided.

6. Apply heat from the heat gun until the heat shrink is snug around the snap hook. The heat shrink should cover the spring clip opening of the snap hook completely.

7. Repeat steps 4 through 6 for the snap hook on the opposite side.

8. Inspect both snap hooks modified in steps 4 through 7. To ensure the heat shrink is snug around the snap hooks and covers the snap hook spring clip opening completely.

9. Snap retaining straps of LPU-21 collar lobes around mesh material of CMU-30/P22P-15 just below armor handle strap loop locs.

10. Don survival vest and life preserver as one assembly.

7-17. MODIFICATIONS.

7-18. Modification of vest to accommodate helicopter aircrew A/P23P-14A(V) or A/P22P-14(V)1 CBR respirator assemblies is authorized. See paragraph 7-29. In addition, ACC 599 HEED Quick Disconnect must be fabricated and attached to SRU-40/P HABD Pocket of vest. Repairs and replacements to maintain serviceability of the vest are listed in Table 7-2. Repairs for the vest other than those listed may be performed at the discretion of the repairing maintenance activity.

7-19. The CMU-30/P22P-15 Survival Equipment Vest (P/N 3241AS301) used by aircrews of USN/USMC helicopter, E-2C, and C-2A aircraft shall be modified to accommodate the SRU-40/P HABD in accordance with ACC 640. Upon incorporation of ACC 640 the modified CMU-30/P22P-15 Survival Vest shall be identified by Part Number 3241AS302-101.

1. The currently installed SRU-36/P, HEED (P/N 1586AS101-1) shall be removed and returned to supply in F condition. The SRU-40/P Pocket Assembly (P/N 3241AS307-1) shall be removed and retained in accordance with local Wing directive.

7-20. MAINTENANCE.

7-21. Repairs or other required maintenance actions shall be performed at the lowest technically capable maintenance level possible. All maintenance actions and inspections shall be documented in accordance with COMNAVAIRFORINST 4790.2.

Table 7-2. Repair/Replacement/Fabrication

Description of Repair or Replacement	Paragraph Number
Replacement of loose or broken stitching	Note 1
Repair of small holes or tears	Note 1
Replacement of hook and pile fastener tapes	Note 2
Replacement of snap fasteners	Note 3
Repair/replacement of back adjustment straps	7-26
Repair/replacement of LPU collar lobe attachment	7-27
Repair/replacement of survival vest securing (waist) belt assembly	7-28
Repair/replacement of the shoulder rings (looplocs)	7-30
Repair/replacement of the hoisting harness and D-ring cover	7-31
Repair/replacement of back flaps	7-32
Repair/replacement of soft and hard armor casing assembly	7-71
Fabrication/repair of H-Harness	7-76
Fabrication/repair of Armor Beaded Pull Handle	7-77
Fabrication/repair of the Quick Disconnect Strap	7-78
Fabrication/repair of Back Hard Armor Retaining Strap	7-79

Notes:
1. Unless otherwise specified all stitching shall be in accordance with ASTM-D-6193, Type 301 lockstitch, 7 to 10 stitches per inch with minimum 1/2-inch backstitch.
2. Broken or loose stitching shall be repaired using thread conforming to MIL-T-83193, Size E, sage green (NIIN 00-130-6245) or V-T-295 Size E, sage green (NIIN 00-616-0079).
3. Worn or damaged hook and pile fastener tape shall be replaced using same type and size fastener tape. Replacement fastener tape shall be stitched in place 1/8 inch from edges using thread conforming to V-T-295, Size E, sage green (NIIN 00-616-0079).
4. Broken or missing snap fastening devices may be repaired using the same type of snap fastener. Refer to the applicable paragraph to determine the correct choice. Remove broken snap, if applicable, and attach new stud and eyelet in original position. Snap fasteners on either side of the slide fastener should be reinforced with a 14 X 1 inch strip of MIL-T-5038 Type III nylon tape sewn on the backside.

7-22. ACCEPTANCE/SPECIAL INSPECTION. An Acceptance/Special Inspection shall be performed at organizational level or above upon issue prior to placing the CMU-30/P22P-15 in service and every 90 days thereafter.

NOTE

Survival items shall be inspected in accordance with NAVAIR 13-1-6.5, Rescue and Survival Equipment.

1. Visually inspect survival items.

2. Ensure pockets are securely fastened to vest.

3. Inspect fabric for cuts, tears, and abrasions.

4. Inspect stitching for security.

5. Inspect hook and pile fasteners for secure attachment and closure.

6. Inspect to ensure required survival items are present and securely attached.

7. Inspect slide fastener for damage, security, and ease of operation. Inspect the thong pull tabs to ensure they are present and securely attached.

8. Verify overall condition of survival vest.

9. Ensure that inspection is completed and that any discrepancies found were corrected.

10. If cleaning is necessary, refer to paragraph 7-23.

11. If cleaning is not necessary, repack vest in accordance with paragraph 7-15.

12. Document inspection in accordance with COMNAVAIRFORINST 4790.2.

7-23. CLEANING. Clean CMU-30/P22P-15 vest as follows:

Materials Required

Quantity	Description	Reference Number
As Required	Detergent, General Purpose	Commercial

1. Mix a proper strength solution of detergent following detergent manufacturer's recommendations.

CAUTION

Ensure all survival items are removed from vest.

2. Immerse vest in solution and allow to soak for five minutes. Agitate gently for two minutes. Drain; do not wring.

3. Rinse vest in cool, fresh water until all traces of detergent are gone.

CAUTION

Do not use dryer. Do not hang in direct sunlight.

4. Hang vest on wooden or plastic hanger in a well-ventilated area until dry. Do not iron or press.

5. Repack vest in accordance with paragraph 7-15.

7-24. REPAIRS AND REPLACEMENTS.

7-25. Repairs and replacement shall be performed at the lowest level of technically capable maintenance possible. Table 7-2 lists the common repairs and replacements to maintain serviceability.

7-26. REPAIR/REPLACEMENT OF SURVIVAL VEST BACK ADJUSTMENT STRAPS. Replace the survival vest adjustment straps or loop slide as follows:

Materials Required

Quantity	Description	Reference Number
As Required	Tape, Nylon, OD Type IV 1-Inch Wide	MIL-T-5038 NIIN 00-261-8579
As Required	Fastener, Tape Pile, Sage Green, 1-Inch Wide	MIL-F-21840 NIIN 00-405-2263
As Required	Fastener, Tape Hook, Sage Green, 1-Inch Wide	MIL-F-21840 NIIN 00-405-2266
As Required	Thread, Nylon, Size E, Sage Green	V-T-295 NIIN 00-204-3884
3	Loop Slide	MS51940-9S NIIN 00-664-6395

NOTE

Unless otherwise specified all stitching shall be in accordance with ASTM-D-6193, Type 301 lockstitch, 7 to 10 stitches per inch with minimum 1/2-inch backstitch.

1. Cut thread attaching cover flap to vest and damaged strap. Discard damaged strap. Refer to Figure 7-3.

2. Cut 8 1/4-inch length of 1-inch pile tape, MIL-F-21840.

3. Cut 2 1/2-inch length of 1-inch hook tape, MIL-F-21840, and sew 1/8 inch from edge onto back of pile tape at one end using size E thread (sage green).

4. Install new strap to replace strap removed in step one using size E thread 8 to 10 stitches per inch.

5. Refit vest to aircrewmember in accordance with paragraph 7-12.

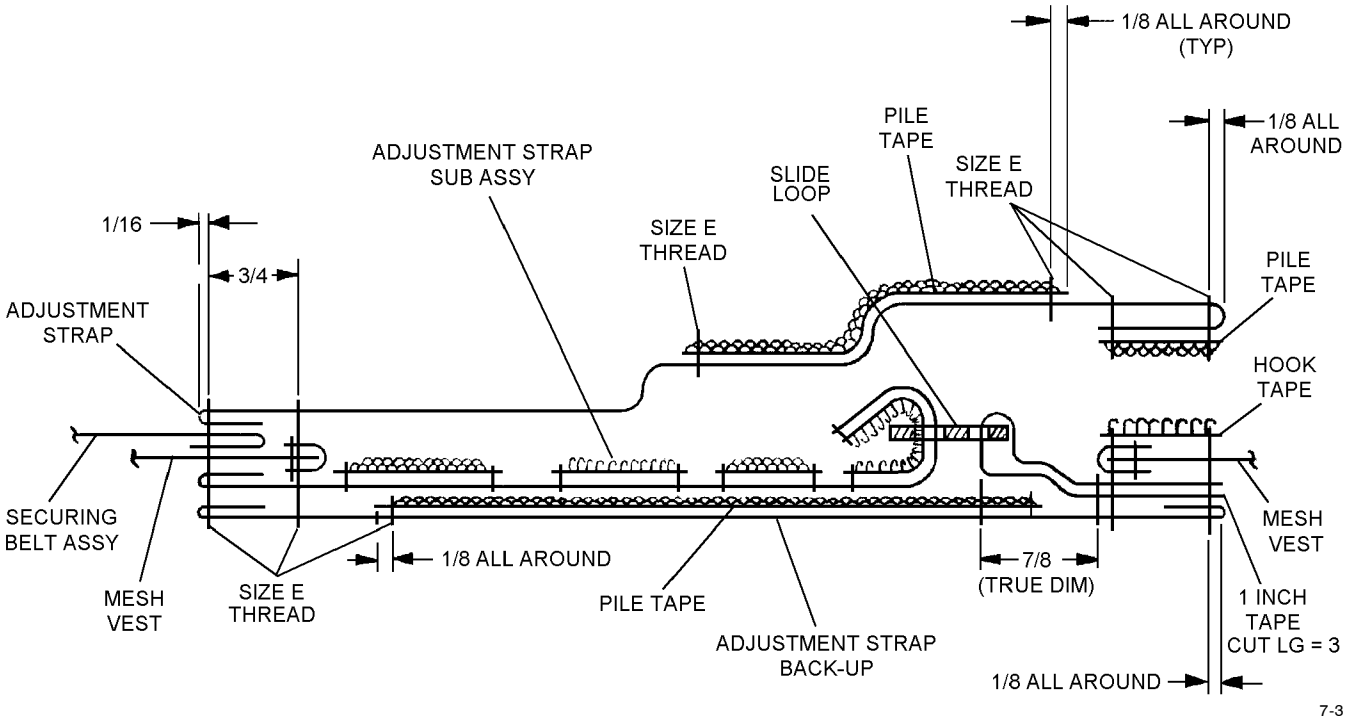

Figure 7-3. Back Adjustment Strap

6. To remove loop slide (right side), cut thread that attaches one-inch wide nylon tape. Remove and discard tape; save loop slide if useable.

7. Cut three-inch length of one-inch nylon tape to replace tape removed in step 6. Fold tape through loop slide and sew to inner fold of vest using size E thread, leaving 7/8-inch of nylon tape exposed.

8. Sew hook tape to vest using size E thread, 8 to 10 stitches per inch.

7-27. REPAIR/REPLACEMENT OF LPU COLLAR LOBE ATTACHMENT. Repair/replace LPU collar lobe attachment as follows:

Materials Required

Quantity	Description	Reference Number
20 Inches	Tape, Nylon, OD Type IV, 1-Inch	MIL-T-5038 NIIN 00-261-8579
2	D-Ring, Class 2 Steel, Black	MIL-R-3390 NIIN 00-260-1415
2	Loop Slide, 1-Inch, Black	MS51940-9S NIIN 00-664-6395
As Required	Thread, Nylon, Size E, Sage Green	V-T-295 NIIN 00-204-3884

1. Sear cut 9 3/4-inch length of MIL-T-5038 one-inch nylon tape. Refer to Figure 7-4 and install as follows:

a. Fold end over 1 inch and crossbox stitch using size E thread.

b. Sew 1 1/4-inch length of MIL-T-5038 one-inch nylon tape to back of vest opposite collar lobe attachment.

c. Butt bottom edge of 9 3/4-inch tape against top piece of pile tape closest to the slide fastener and sew in place using size E thread.

d. Crossbox stitch end of tape to mesh vest with size E thread.

e. Weave tape though loop slide.

f. Weave tape through D-ring, fold tape back, and reweave through loop slide. Ensure adjustment straps are on the outside for easy adjustment.

2. Repeat procedure for left side of vest, if necessary.

7-28. REPAIR/REPLACEMENT OF THE SURVIVAL VEST SECURING (WAIST) BELT ASSEMBLY. Repair/replace securing belt assembly as follows:

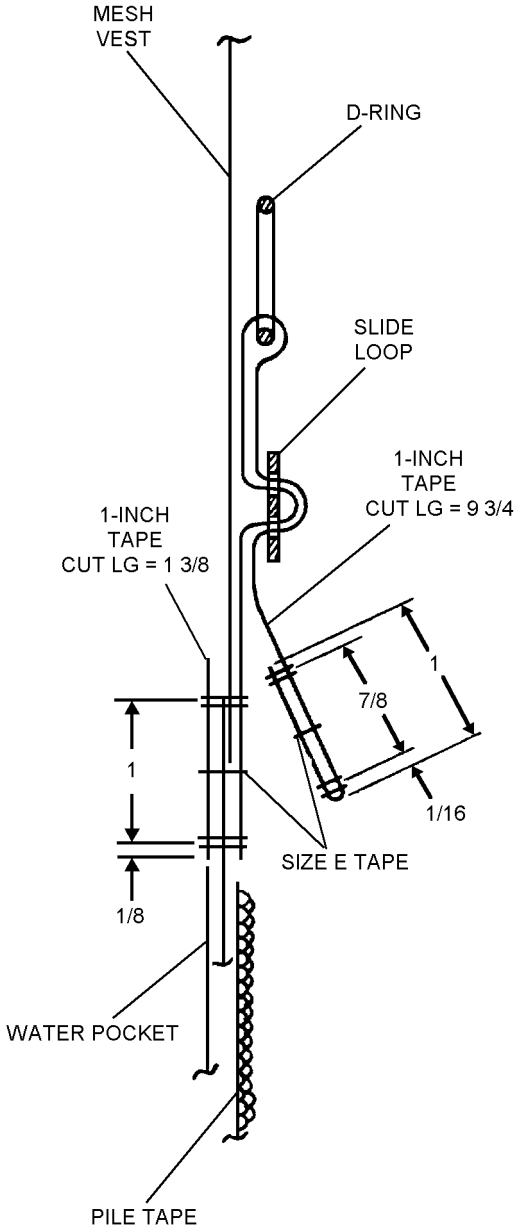

7-4

Figure 7-4. Repair/Replacement of Collar Lobe Attachment

Materials Required

Quantity	Description	Reference Number
As Required	Tape, Nylon, OD, Type IV, 1-Inch Wide	MIL-T-5038 NIIN 00-261-8579

Materials Required (Cont)

Quantity	Description	Reference Number
As Required	Webbing, Nylon, Type VIII, Sage Green, 1 23/32-Inch Wide	MIL-W-4088 NIIN 00-261-8585
4	Fastener, Snap, Unidirectional, Button	MS27983-1 NIIN 00-891-9073
4	Fastener, Snap, Unidirectional, Socket	MS27983-2 NIIN 00-893-6243
4	Fastener, Snap, Unidirectional, Stud	MS27983-3 NIIN 00-276-4908
4	Fastener, Snap, Unidirectional, Eyelet	MS27983-4 NIIN 00-276-4978
As Required	Thread, Nylon, Type II, Class 1, Size E, Sage Green	V-T-295 NIIN 00-204-3884
1	DOT Snapmaster	89-M840 (CAGE 13940)
1 Set	Punches and Dies for Unidirectional Snap Fastener	4305, 4405 4304, 4404 (CAGE 13940)

1. Repair/Replace Tape Loops:

a. Searcut 3-inch length of MIL-T-5038 one-inch nylon tape.

b. Remove damaged tape loop and replace with new 3-inch length of tape using 1/8 by 3/4-inch bar-tack stitch.

2. Replace Fastener Studs and Eyelets:

a. Remove damaged stud and eyelet.

b. Install new fastener stud, (MS27983-3) and eyelet (MS27983-4) using DOT Snapmaster and uni-directional punch (4304) and die (4404) set.

3. Replace Fastener Socket and Button:

a. Remove damaged socket and button making note of position of directional dot.

b. Replace socket and button using DOT Snapmaster and unidirectional punch (4305) and die (4405) set. Ensure directional dot is in correct position (facing end of webbing).

4. Replace Securing Belt:

a. Remove secured end of belt by cutting thread.

b. Searcut 18-inch length of MIL-W-4088 nylon webbing.

c. Fold one end under 1 1/4 inch and crossbox stitch using size E thread. Install sockets and buttons as described in step 3 above. See Figure 7-5 for dimensions and orientation.

d. Snap buttons to sockets, lay flat, and fold end under 1 1/4 inch and crossbox stitch to vest using size E thread. (Remove hoisting harness and/or belt loop on the inside of vest, if necessary).

5. Repeat step 4 for opposite side of vest, as required.

7-29. REPAIR/MODIFICATION TO ACCOMMODATE HELICOPTER AIRCREW A/P23P-14A(V) OR A/P22P-14(V)1 CBR RESPIRATOR ASSEMBLY. Repair/modify the vest to accommodate the CBR respirator assembly as follows:

1. Reposition strobe light pocket to left side of pencil flare pocket on other side of vest to provide space for CBR respirator assembly.

2. Snap CBR Receiving Bracket Assembly (P/N 1774AS308-1) to CMU-30/P22P-15 using six snaps located above SRU-31/D medical kit pocket. Attach CBR Pusher Fan and Battery Assembly (P/N 1774AS301-1) to CBR receiving bracket.

7-30. REPAIR/REPLACEMENT OF THE SHOULDER RINGS (LOOPLOCS). Replace/repair shoulder rings as follows:

Materials Required

Quantity	Description	Reference Number
2	Looploc	3241AS302-38 (CAGE 30003)
4 Inches	Tape, Nylon, Type III, 3/4-Inch, Sage Green	MIL-T-5038 NIIN 00-176-8083
As Required	Thread, Nylon, Size E, Type 1, Class A, Sage Green	V-T-295 NIIN 00-204-3884

1. Lay vest flat on flat surface with outside of vest facing up with neck at top and waist at bottom.

2. Searcut 3 3/4-inch length of MIL-T-5038 3/4-inch tape.

3. Locate right shoulder seam area where the front and rear mesh sections are sewn together. (Remove hoisting harness, if necessary)

a. Fold the 3 3/4-inch tape into three equal folds (approximately one inch). See Figure 7-6 for dimensions and orientation.

b. Position folded tape with 1-inch length perpendicular to and centered on the shoulder seam.

c. Using size E thread, tack down one end of folded tape with 9/16-inch X 3/8-inch crossbox stitch staying 1/16-inch from edge.

d. Position looploc on the tape and tack down open end of folded tape using size E thread and 9/16 X 3/8-inch crossbox stitch staying 1/16-inch from edge.

4. Repeat steps 1 through 3d for left side of vest.

7-31. REPAIR/REPLACEMENT OF THE HOISTING HARNESS, INCLUDING REINFORCEMENT FOR THE SAR LIFT HOIST GATED D-RING. Repair/replace the integral harness and/or reinforce the SAR lift hoist gated D-ring as follows:

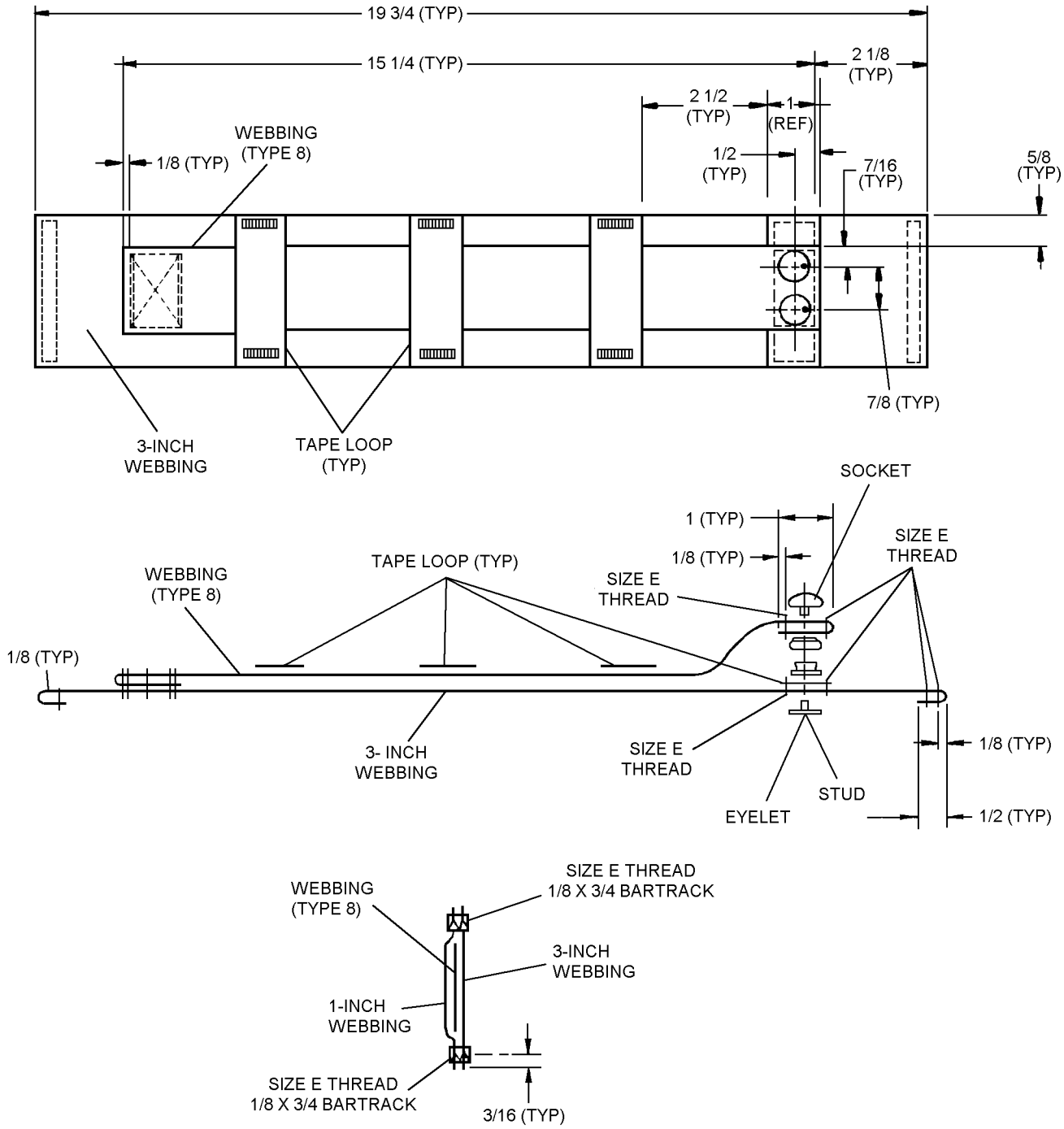

7-5

Figure 7-5. Survival Vest Securing (Waist) Belt Assembly

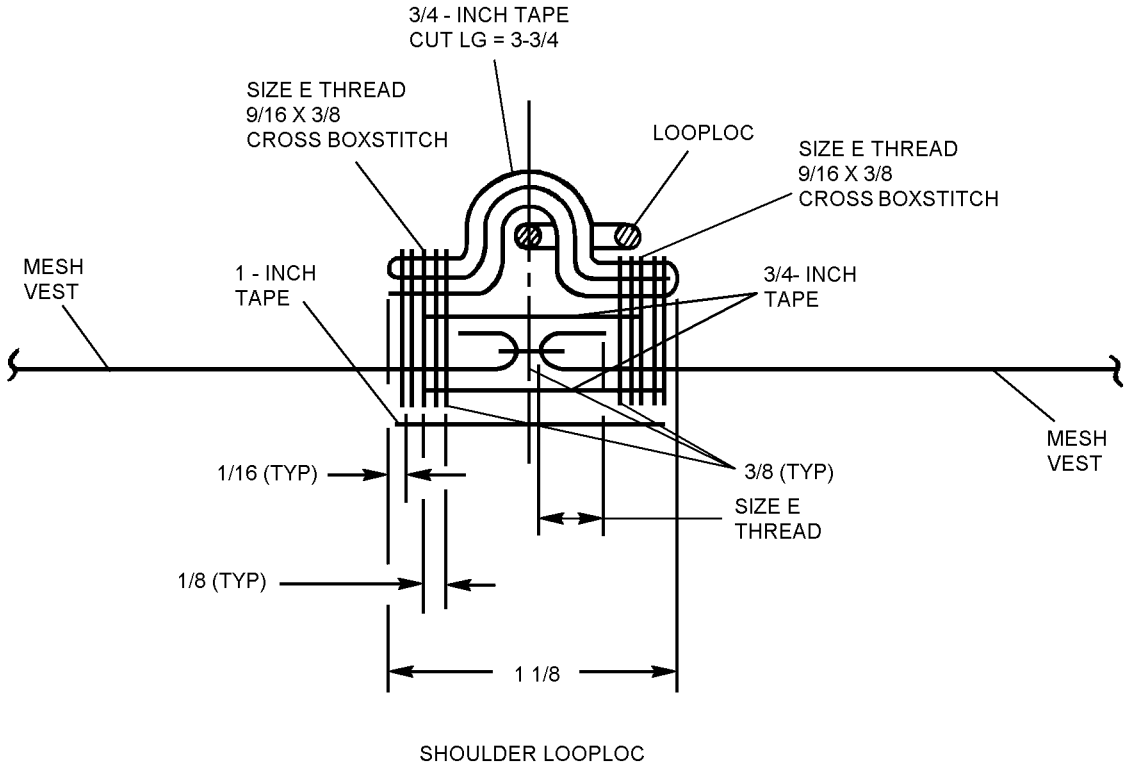

Figure 7-6. Survival Vest Shoulder Ring (Looploc)

Materials Required

Quantity	Description	Reference Number
15 ft, 4 in.	Webbing, Nylon, Type XIII, 1 23/32-Inch, Olive Drab, Sage Green	MIL-W-4088 NIIN 00-261-8585 NIIN TBD
As Required	Cloth, Plain Weave, Sage Green	MIL-C-83429 NIIN 01-147-2064 (Note 1)
As Required	Tape, Nylon, Type IV, Green, 1-Inch	MIL-T-5038 NIIN 00-261-8579
4 3/4 inches	Webbing, Elastic Cotton, Type I, Class 3, 1 1/2-Inches Wide, Sage Green	MIL-W-5664 NIIN 00-262-1655
2	Snap, Parachute Harness	MS22018 NIIN 00-875-1861
2	Link, Parachute, (Triangle)	MS22020-1 NIIN 00-862-5749

Materials Required (Cont)

Quantity	Description	Reference Number
1	SAR Lift Hoist Gated D-Ring	823AS100-1 NIIN 01-147-1283
As Required	Thread, Nylon, Size FF, Sage Green	V-T-295 NIIN 00-204-3789
As Required	Thread, Nylon, Size 6	V-T-295 NIIN 00-559-5211
	Cutter, Nylon Webbing	C-70513 NIIN 00-956-0081

Notes: 1. NIIN 01-147-2064 has been discontinued without replacement in the supply system. NAVAIR Clothing Team has plentiful supply on hand and can distribute in 5 yard increments to any fleet activities who need it. Please contact member of the Personal Protective Clothing Team to request material. Team Members are listed on the PMA202 website.

1. The right and left sections of the hoisting harness are similar with the exception of the right harness. The right side harness has the SAR lift-hoist gated D-ring and harness guide tape as part of its assembly (Figure 7-7). Replace, as required, right section of integral harness as follows:

NOTE

When right harness must be removed for repair or replacement, the left harness must also be separated from the vest since it passes through the alignment guide attached to the right harness.

Since gated D-ring may not fit through vest opening, it may be necessary to remove the triangle link from the old harness and cut the stitching securing the gated D-ring in order to remove harness and D-ring from vest.

a. Remove boxstitch of old harness at skirt of vest and remove harness by feeding it through harness holders of vest.

b. Using nylon webbing cutter searcut 103 inches of Type XIII nylon webbing.

c. Reeve one end through triangle parachute link going from bottom to top and fold back 5 inches (fold-back section on top). Starting one inch from parachute link stitch 3 point with size 6 thread for two inches using four to six stitches per inch.

d. Searcut a 6-inch length of MIL-T-5038 1-inch nylon tape for use as harness guide tape.

e. Position harness with folded portion of triangle-link end up. Measure and mark positions on harness at 23 5/8 ±1/4 inches and 45 5/8 ±1/4 inches from top of triangle parachute link.

f. At 45 5/8 ±1/4 inches, install 6-inch guide tape to center of and aligned with hoisting harness. Using size FF thread, secure each end of aligned tape to the harness with a 5/8 X 3/4-inch cross boxstitch (see Figure 7-7).

g. Position triangle end of harness on skirt of vest (see Figure 7-7) and stitch 1 1/2 X 1 1/4-inch cross boxstitch.

h. Reeve free end of harness through harness holders and through the vest opening for the gated D-ring to the 23 5/8 ±1/4 inch position marked in step 1e.

i. Slide gated D-ring on harness with gated D-ring on top with opening on slide fastener side and move D-ring to pre-marked position 23 5/8 ±1/4 inches from triangle parachute link (see Figure 7-7).

j. Feed harness back through the vest opening and draw D-ring into position at vest opening. Fold harness back under gated D-ring position 5 inches, then fold back and stitch the three layers together 3 1/2 four point using size 6 thread.

k. Reeve harness through remaining holders to left side of vest.

l. Slide elastic webbing keeper over end of harness.

m. Move keeper up and install parachute snaphook onto harness (see Figure 7-7 for orientation).

n. Double-fold end of harness and stitch 3/8 X 1 1/2-inch boxstitch.

2. Repair/replace left section of integral harness as follows (see Figure 7-7):

a. Remove boxstitch of old harness at skirt of vest and remove harness by feeding it through harness holders of vest.

b. Using nylon webbing cutter, searcut 93 inches of Type XIII nylon webbing.

c. Reeve one end through triangle parachute link going from bottom to top and fold end back 5 inches (fold-back section on top). One inch from parachute link, stitch 3 point with size 6 thread for two inches, four to six stitches per inch.

d. Stitch triangle link end of harness to skirt of vest using 1 1/4 X 1 1/2 inch crossbox stitch (see Figure 7-7).

e. Reeve free end of harness through harness holders and tape guide to right side of vest.

f. Slide elastic webbing keeper on opposite (free end) of harness.

g. Move keeper up and install parachute harness snaphook on harness. See Figure 7-7 for orientation.

h. Double fold end of harness and stitch 3/8 X 1 1/2-inch boxstitch.

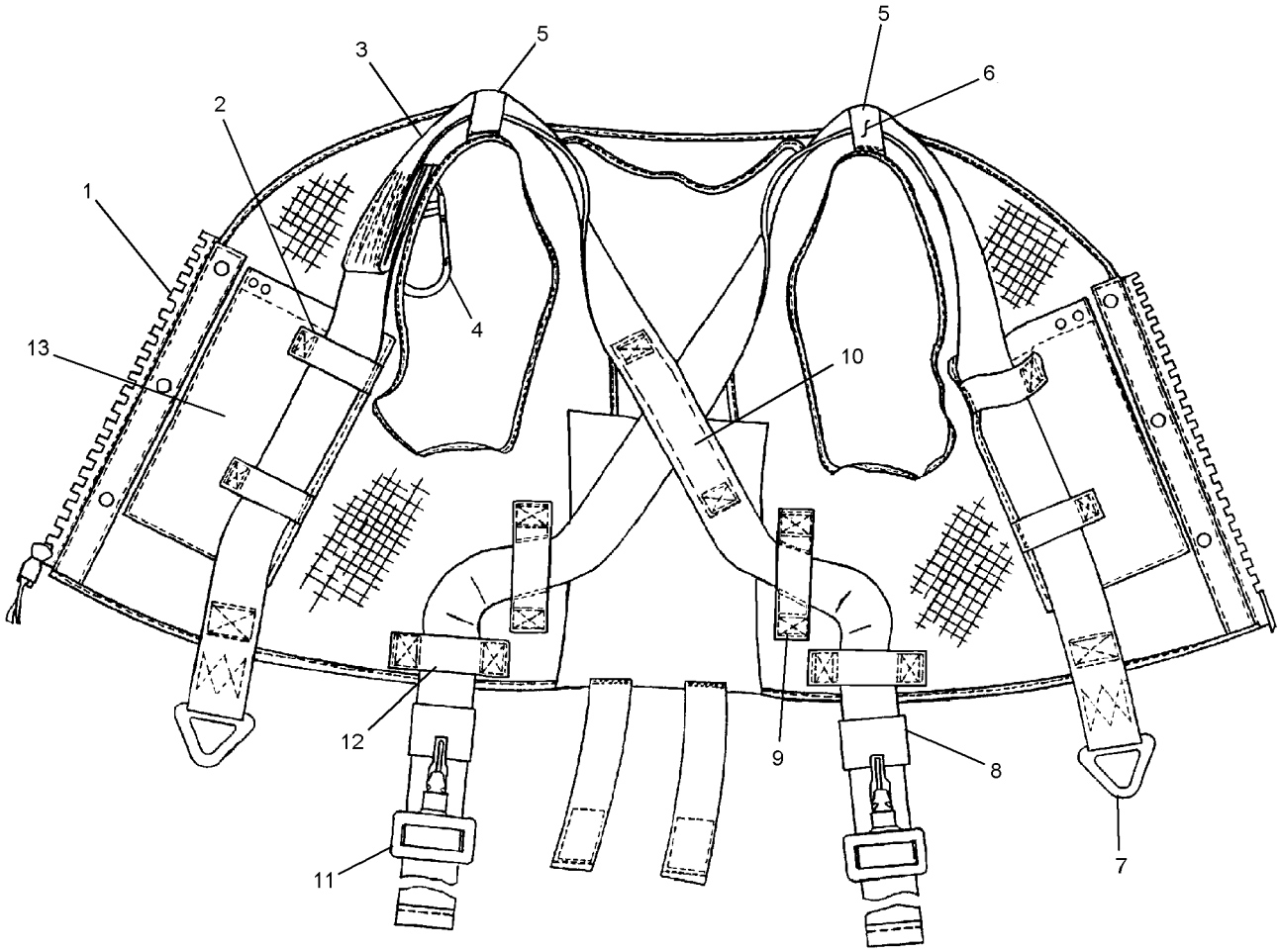

1 SLIDE FASTENER
2 HARNESS HOLDER (4 PLACES)
3 HARNESS
4 D-RING
5 SHOULDER LOOP (2 PLACES)
6 HARNESS HOLDER (2 PLACES)
7 TRIANGLE LINK (2)
8 KEEPER (2)
9 HARNESS ALIGNMENT HOLDER (2 PLACES)
10 GUIDE TAPE
11 SNAPHOOK (2 PLACES)
12 HARNESS HOLDER (2 PLACES)
13 WATER/OPTIONAL ITEM POCKET (2 PLACES)

7-7-1

Figure 7-7. Vest Assembly with Hoisting Harness Installed (Interior) (Sheet 1 of 2)

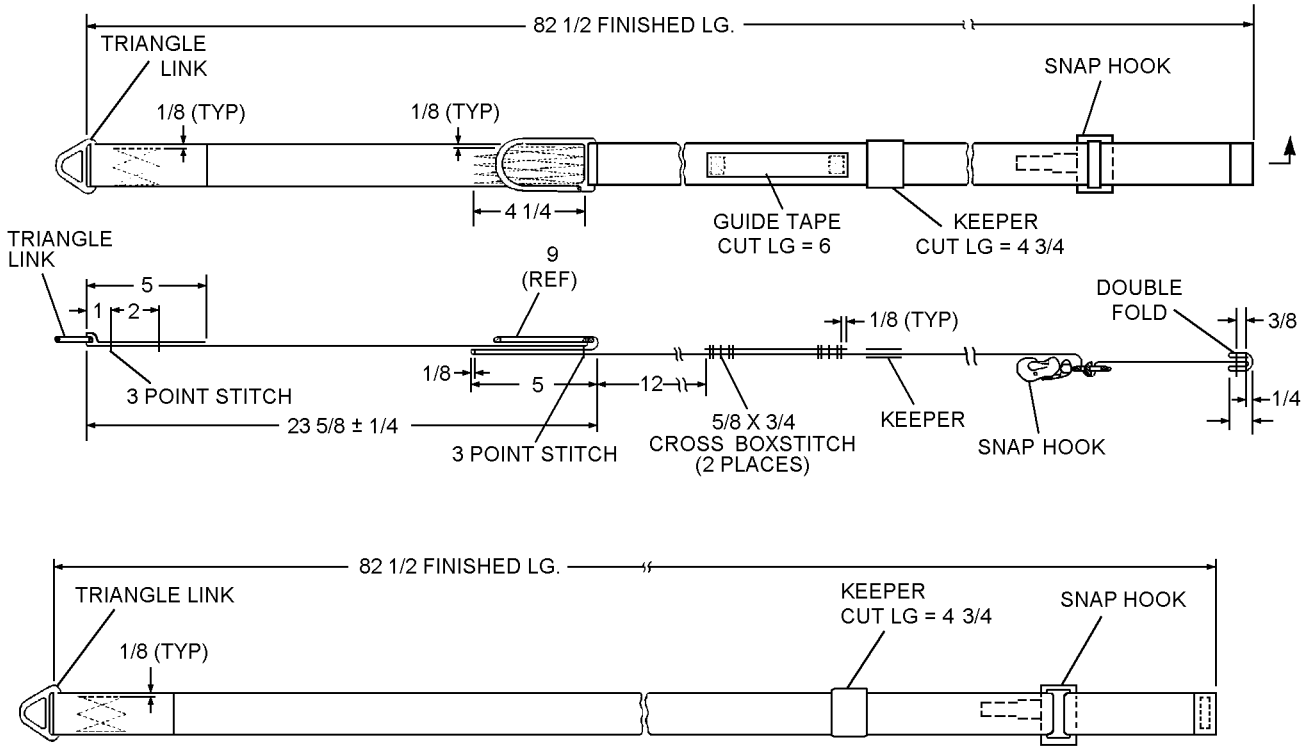

7-7-2

Figure 7-7. Vest Assembly with Hoisting Harness Installed (Interior) (Sheet 2 of 2)

3. Keeper. Repair/replace either keeper as follows:

a. Fold double one 4 3/4-inch piece of elastic cotton webbing, MIL-W-5664, with green inside, and single stitch open ends together 1/4 inch from tip using size E thread. Turn inside out.

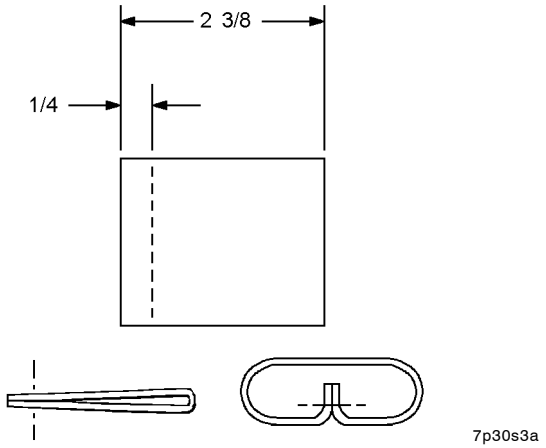

Step 3a - Para 7-31

b. Fold tips back and single stitch in place.

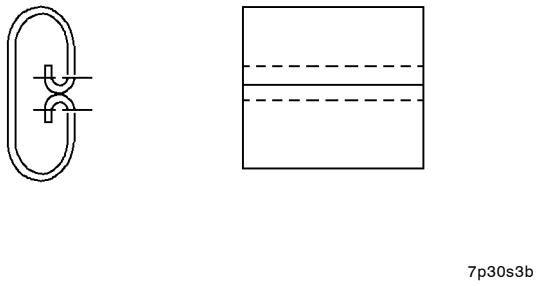

Step 3b - Para 7-31

c. Retain keeper inside-out configuration.

4. Torso Harness Retaining Straps.

a. The vest has eight hoisting harness holders and two alignment holder straps (Figure 7-7), all made with MIL-T- 5038 Type IV, 1-inch sage green tape. If stitching is torn, resew as necessary. If tape is torn, cut stitching and remove torn tape, being careful not to damage the vest. Prepare replacement tape and stitch in place using V-T-295 size E thread.

NOTE

When replacing harness holder alignment tapes, ensure sewn alignment channels of tapes are properly oriented. The high side of the channel on each alignment tape must be aligned toward the opposite shoulder, or center of vest.

5. SAR Lift Hoist D-Ring Vest Opening (Figure 7-8). Repair/replace vest opening for gated D-ring as follows:

a. Cut section of MIL-C-83429 cloth two inches by three inches, or as necessary to cover torn mesh.

b. Cut hole in center 1 3/4 inches long by 1/4 inch wide. Stitch the reinforcement patch to mesh vest from the top.

c. Make a 1/8-inch cut in each corner.

d. Fold cloth under 1/8 inch along each side of the cut slot and each end. Sew duck to nylon mesh 1/8 inch from folded edge.

e. Continue stitching cloth to mesh.

6. Repeat procedures of step 5 for opposite side, as necessary.

7. SAR Lift Hoist Gated D-Ring Securing Cover. Repair/replace securing cover for gated D-ring as follows:

a. Cut to length, 4 inches of 1-inch hook tape (MIL-F-21840), 4 inches of 1-inch pile tape (MIL-F-21840), and 2 inches of MIL-T-5038 1-inch nylon tape.

b. Cut two sections of cloth: 5 X 3 1/4 inches and 5 X 2 inches.

c. Measure down 4 1/2 inches from the front center of the 2-inch cut for the SAR Lift Hoist D-Ring and mark.

d. Fold vertical edge and sew 1/4 inch hem on all 4 sides of each piece of cloth.

e. Cut 3-inch length of MIL-T-5038 one-inch nylon tape, fold in half, and stitch 1/8 inch all around.

f. Sew nylon tape onto flap such that edge extends 1 inch beyond flaps 3/32 inch from edge of tape.

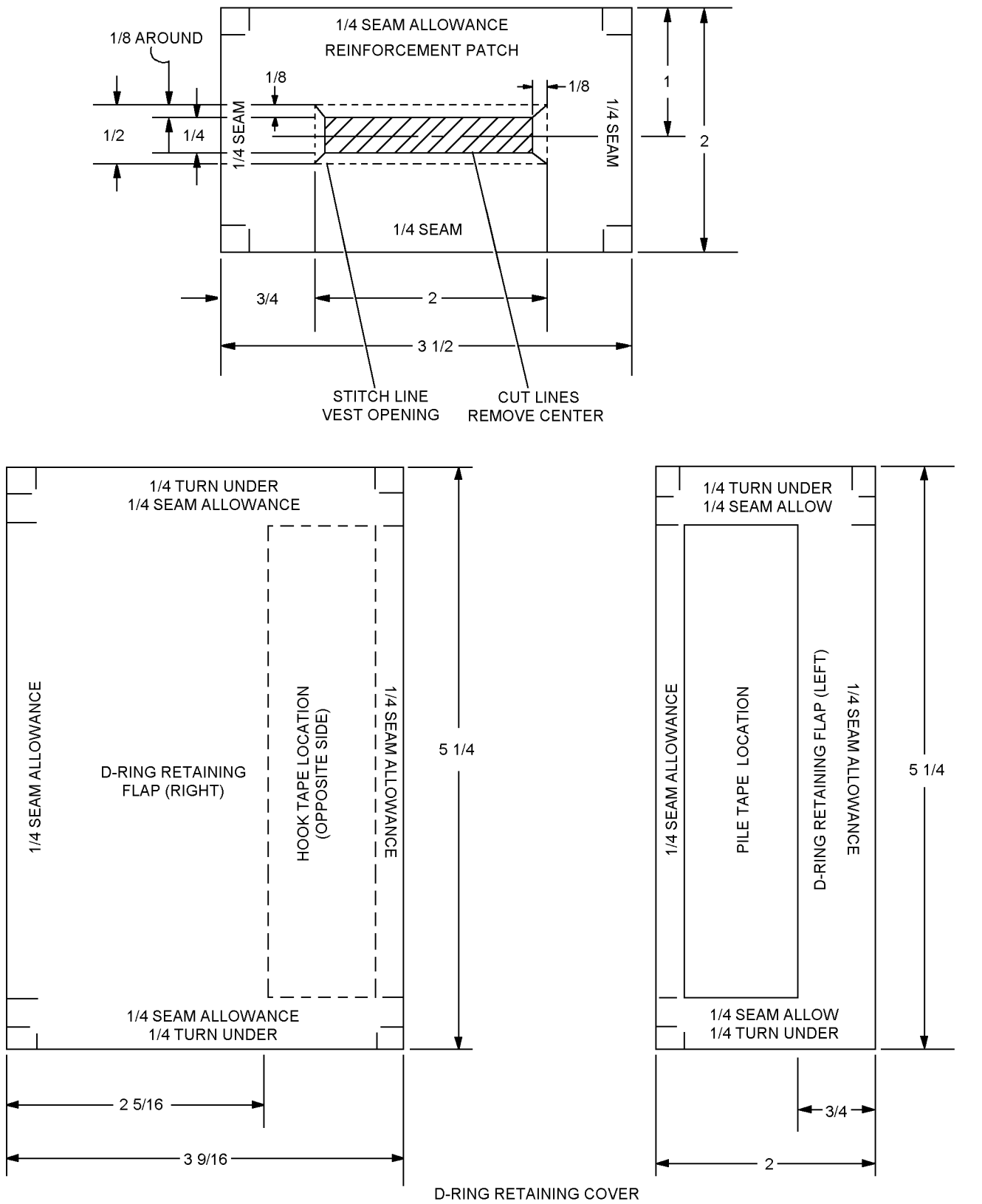

Figure 7-8. SAR Lift Hoist Gated D-Ring Installation (Sheet 1 of 2)

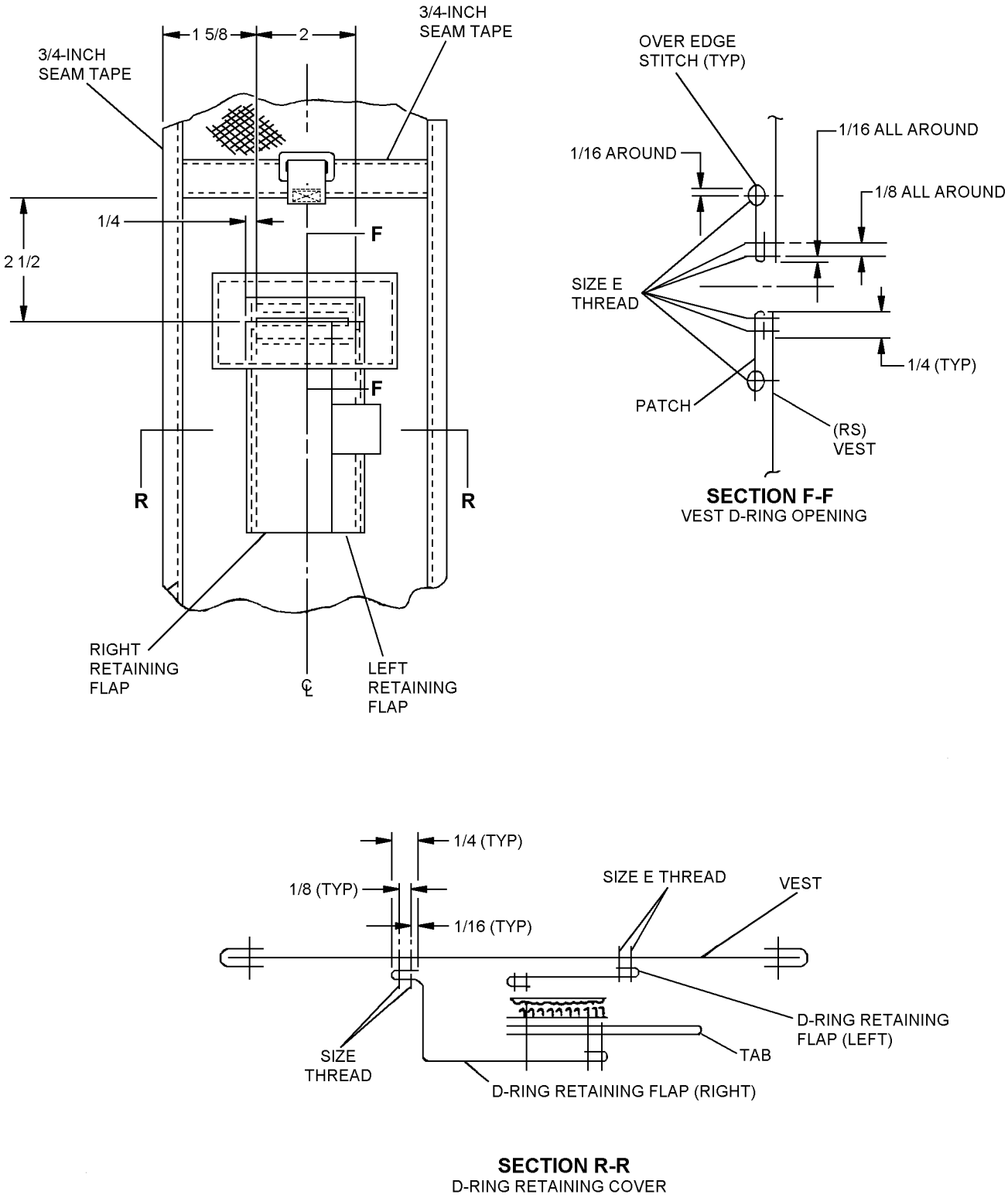

7-8-2

Figure 7-8. SAR Lift Hoist Gated D-Ring Installation (Sheet 2 of 2)

g. Take 4-inch length of one-inch hook and pile fastener tape (prepared in step 7a) and sew on vertical edges of flaps.

7-32. REPAIR/REPLACEMENT OF BACK FLAPS FOR BACK HARD BALLISTIC ARMOR. Replace/repair vest back flaps for back hard armor plate (Figure 7-9), as follows:

Materials Required

Quantity	Description	Reference Number
18 Inches	Webbing, Nylon, Type XV, 2-Inch	MIL-W-4088 NIIN 00-082-2142
4 Inches	Fastener, Tape, Hook, Sage Green, 2-Inch	MIL-F-21840 NIIN 00-450-9837
As Required	Thread, Nylon, Size E, Sage Green	V-T-295 NIIN 00-204-3884

1. Searcut two 9 1/2-inch lengths of Type XV nylon webbing.

a. Fold end of each length back 1/2 inch and doublestitch using size E nylon thread.

2. Cut two 4 1/4-inch lengths of 2-inch hook tape fastener.

a. Sew hook tape fastener sections to the folded side of the end of each nine-inch strap prepared in step 1a, 1/8 inch from end of fold using size E thread.

3. Position vest flat on the table with the inside facing up, the neck at the top, and the waist at the bottom.

a. Position free-end of 9-inch strap on skirt edge of vest, one inch from centerline of back, with hook tape side of strap facing down (toward outside of vest).

b. Fold end of strap down 1/2 inch with folded side down and aligned with hem of vest skirt.

c. Sew to vest using boxstitch set 1/8 inch around.

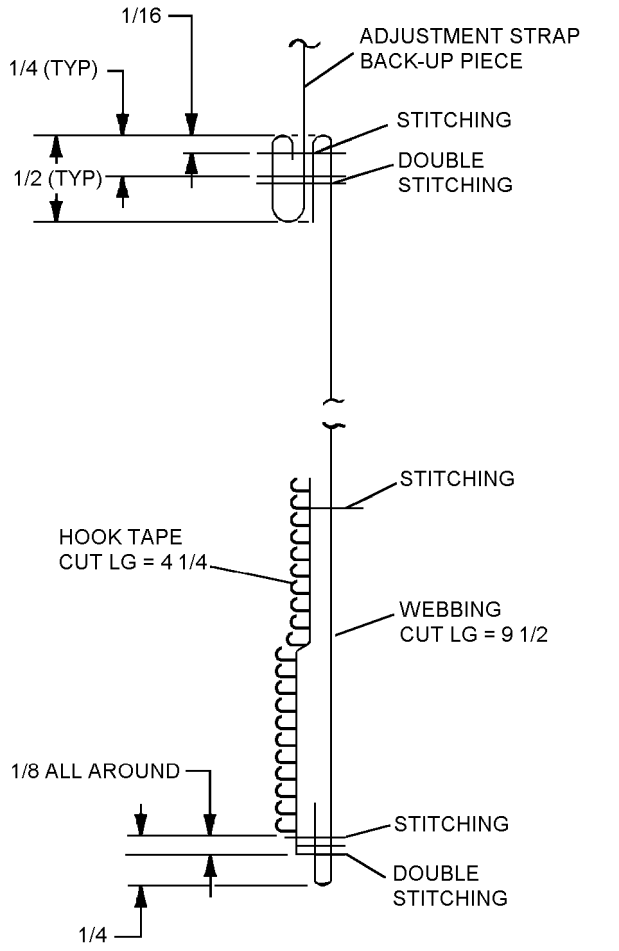

Figure 7-9. Back Flap for Back Hard Ballistic Armor Insert

d. Place second strap prepared in step 1a one inch from centerline (straps should be installed two inches apart). Install second strap following steps 3a through 3c.

7-33. REPAIR/REPLACEMENT OF POCKETS. If repair of damaged modular pockets cannot be readily accomplished by simple sewing procedures, new pockets must be fabricated. Patterns and sewing instructions can be obtained from NAWCAD (see Table 7-3).

Table 7-3. CMU-30/P22P-15 Stowage Pocket Patterns

Stowage Pocket	Pattern Drawing Number
SDU-5E Strobe Light	3241AS314
AN/PRC Radio	3241AS315
SRU-31/P Medical Kit	3241AS313 Rev A
Sea Dye Marker	3241AS310
Day/Night Flare	3241AS309
Pengun Flare Signal Kit	3241AS312
Helicopter Aircrew Breathing Device (HABD)	3241AS307 Rev A
Chemlite	3241AS306
Flashlight Straps	3241AS305
Water/Optional Item	3241AS392 Rev B
Compass, Whistle, and Mirror	3241AS308
Survival Knife	3241AS311
HABD Pocket Assy, SRU-40/P	3241AS318

Note: Drawings may be obtained from NAWCAD, Patuxent River, MD, Code 4.6.3.1.

7-34. FABRICATION OF HELICOPTER AIRCREW BREATHING DEVICE, SRU-40/P (HABD) POCKET ASSEMBLY. The HABD pocket assembly consists of a Bottle Pocket and a CBR Hose Pocket or Non-CBR Hose Pocket to be fabricated as follows:

Materials Required

Quantity	Description	Reference Number
As Required	Cloth, Nylon Duck	MIL-C-7219, NIIN 01-173-4436
As Required	Fastener Tape, Hook, 1-Inch	MIL-F-21840, NIIN 00-106-5973
As Required	Fastener Tape, Pile, 1-Inch	MIL-F-21840, NIIN 00-405-2263
As Required	Fastener Tape, Hook, 2-Inch	MIL-F-21840, NIIN 00-450-9837
As Required	Fastener Tape, Pile, 2-Inch	MIL-F-21840, NIIN 00-405-2265
As Required	Webbing, Textile, 1-Inch	MIL-W-5664D, NIIN 00-263-3600

Materials Required (Cont)

Quantity	Description	Reference Number
As Required	Webbing, Textile, 1-Inch	MIL-T-5038G, NIIN 00-261-8579
As Required	Tape, Textile, 1-Inch	MIL-T-5038G NIIN 00-753-6144
As Required	Thread, Nylon, Size E, Sage Green	V-T-295 NIIN 00-204-3884
3	Cap, Snap Fastener	MS27983-1 NIIN 00-891-9073
3	Socket, Snap Fastener	MS27983-2 NIIN 00-945-2577
6	Stud, Snap Fastener	MS27983-3 NIIN 00-276-4908
6	Post, Snap Fastener	MS27983-4 NIIN 00-276-4978
3	Grommet, Size 00	MS20230B20 NIIN 00-291-0302
1	Strap, Tie Down	MIL-S-23190 NIIN 00-111-3208
1	Bead, Inflation Handle (Note)	975AS122-1
1	Breathing Device, Helicopter Aircrew, SRU-40/P	1586AS301-1

Note: Obtain bead for inflation handle from Beaded Handle Assy (P/N 975AS121-11, NIIN 01-120-4752, or salvage from LPU-21 or LPU-23 beaded handles.

NOTE

Sear all cut edges of nylon webbing and tape to prevent fraying (recommend use of Cutter, Nylon Webbing, NIIN 00-956-0081). Do not form sharp edges. Unless otherwise specified all stitching shall be in accordance with ASTM-D-6193, Type 301 lockstitch, 7 to 10 stitches per inch with minimum 1/2-inch backstitch. All stitching shall be 1/8 inch from edge unless otherwise specified. All binding tape shall be sewn using two rows of stitching 1/8 inch apart. Use china marker or equivalent for all markings.

7-35. Fabrication of Bottle Pocket Panel. Refer to Figure 7-10 and proceed as follows:

1. Cut a piece of nylon duck cloth 4 3/4 X 8 inches and bind the 8-inch edges with 1-inch binding tape.

2. Cut two 4 3/4-inch lengths of 2-inch hook tape.

3. Orient duck cloth so 8-inch edges are at top and bottom.

4. Measure and mark bottom edge 1 3/4 inches from lower left-hand corner.

5. Measure and mark top edge 1 3/4 inches from top left-hand corner.

6. Draw a vertical line connecting the two 1 3/4-inch positions.

7. Place the two pieces of hook tape with 4 3/4-inch edges side by side along the right side of the vertical line.

8. Sew all edges of both pieces of hook tape in place.

9. Measuring from the top left-hand corner mark portions at 2 3/4 and 4 3/4 inches along top edge.

10. Measuring from the lower left-hand corner mark positions at 2 3/4 and 4 3/4 inches along bottom edge.

11. Draw vertical lines connecting the 2 3/4-inch portions and the 4 3/4-inch positions.

12. On the vertical line between the 2 3/4-inch positions, measuring from the top, mark portions at 1/2 inch, 2 1/2 inches, and 4 1/2 inches.

13. On the vertical line between the 4 3/4-inch positions, measuring from the top, mark positions at 1/4 inch, 2 1/4 inches, and 4 1/4 inches.

14. Punch holes at marked positions.

15. Set posts and studs in the holes with studs showing on the hook tape side.

16. From the top edge, between the two lengths of installed hook tape, measure down 3/8 inch and mark.

17. Punch a hole at the mark and set a grommet in the hole.

18. Measuring from the top left-hand corner mark a position on the top edge at 1/2 inch.

19. Measuring from the bottom left-hand corner mark a position on the bottom edge at 1/2 inch.

20. Draw a vertical connecting the two 1/2-inch positions.

21. Fold the bottle panel in half so the 4 3/4-inch seared edges meet and the hook tape is showing.

22. Stagger the placement of the top and bottom edges to be side by side rather than stacked to reduce the number of layers.

23. Sew a row of stitches along the line connecting the 1/2-inch marks.

7-36. Fabrication of the HABD Hose Pocket Panel For Non-CBR Configuration. Refer to Figure 7-11 and proceed as follows:

1. Cut a piece of nylon duck cloth measuring 10 X 6 1/2 inches.

2. Orient the cloth so the 6 1/2-inch edges are at the top and bottom.

3. Measure and mark the right-hand edge 1 1/4 inches down from the top right-hand corner.

4. Draw a cutline from the top left-hand corner to the 1 1/4 inch mark on the right-hand edge and cut the fabric along the line.

5. Double fold the top and bottom edges 3/8 inch to the back side of the fabric.

6. Stitch a hemline 1/8 inch from the outer edge and another 1/4 inch from the edge.

7. Single fold the side edges 3/8 inch to the back side of the fabric and sew edges in place 1/8 inch from folded edge.

7-37. Attaching HABD Hose Pocket Panel to Pistol Pocket. Refer to Figure 7-11 and proceed as follows:

1. Unfasten the flare pocket on the pistol pocket.

2. On the face of the flare pocket flap, measure and mark the left edge 1 inch down from the top left-hand corner.

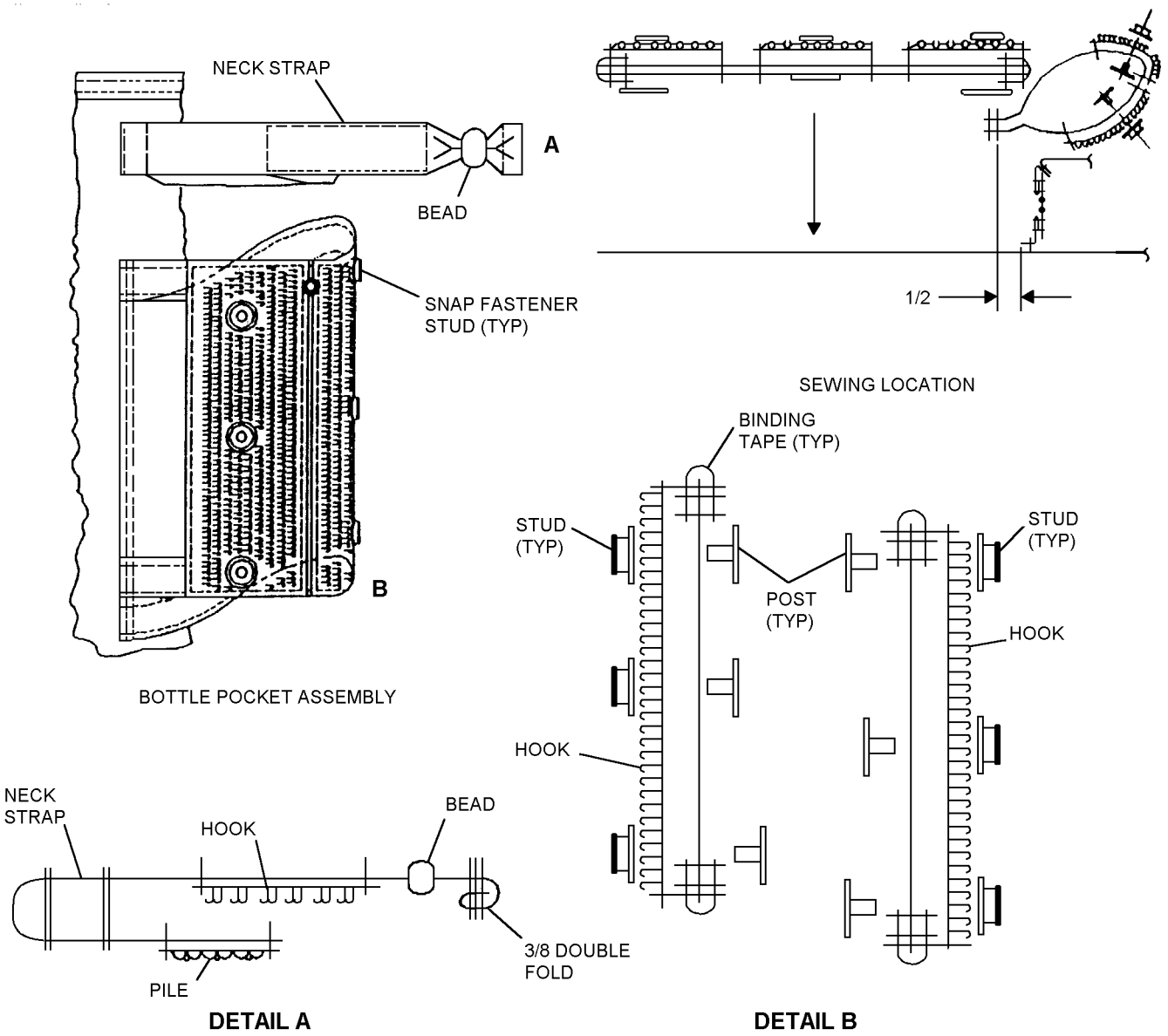

7-10

Figure 7-10. Fabrication of HABD Bottle Pocket Assembly

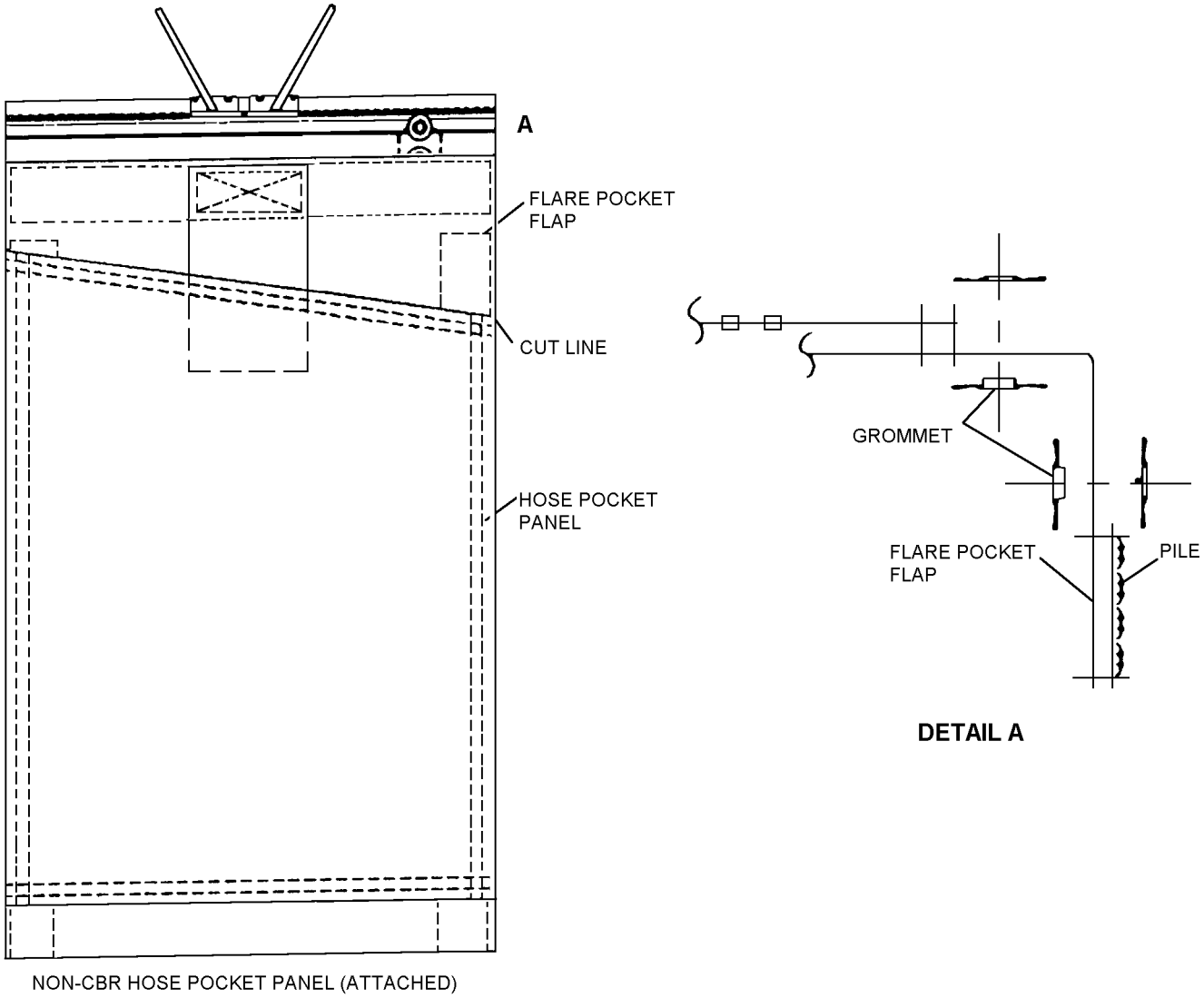

7-11

Figure 7-11. Non-CBR Hose Pocket Assembly

3. On the face of the flare pocket flap, measure and mark the right edge 2 1/4 inches down from the top right-hand corner.

4. Position the hose pocket panel on the outside face of the flare pocket flap so the top left-hand corner of the panel is aligned at the 1-inch mark and the top right-hand corner is aligned with the 2 1/4-inch mark.

5. Sew the left and right sides of the panel in place on the flare pocket flap using one row of stitches 1/8 inch from the outer edge and another at 1/4 inch from the outer edge. Reinforce with a minimum backstitch of 1 inch.

7-38. Fabrication of HABD Bottle Neck Strap. Refer to Figure 7-10 and proceed as follows:

1. Cut a 12 1/2-inch length of 1-inch webbing. Measure and mark 2 inches from one end.

2. Turn webbing over and, measuring from the same end as in step 1, mark webbing at 4 inches, 6 1/2 inches, and 9 1/2 inches.

3. Cut a 2-inch length of 1-inch pile tape and sew on webbing between the end and the 2-inch mark measured in step 1.

4. Cut a 3-inch length of 1-inch hook tape and sew in place on webbing between 6 1/2 inch and 9 1/2-inch marks measured in step 2.

5. On hook tape end of webbing, slide a bead onto the webbing until it touches the hook tape.

6. Make 3/8-inch double fold, end over end, on end of webbing and sew the fold together using three rows of stitches placed side by side.

7. Fold webbing at the 4-inch mark so hook tape is on the inside and pile tape is outside.

7-39. Setting Grommet of Pistol Pocket. Refer to Figure 7-11 and proceed as follows:

1. Unfasten the upper flap of the flare pocket.

2. Turn pocket over and lay it flat so the pile tape is facing up and is at bottom.

3. From the bottom right-hand corner, measure up the right-hand edge and place a mark at 1 1/4 and 1 3/4 inches.

4. Measure and mark grommet locations 1 1/2 inches to the left of the 1 1/4 and 1 3/4 inch marks made in step 3.

5. Punch holes at marked locations and set grommets.

7-40. FABRICATION OF HABD HOSE POCKET FOR CBR CONFIGURATION. The CBR hose pocket consists of two major parts, the back panel and the front panel.

7-41. Fabrication of Back Panel of HABD Hose Pocket. Refer to Figure 7-12 and proceed as follows:

1. Measure and cut a piece of nylon duck cloth 16 inches X 4 1/2-inches.

2. Orient the cloth so the 4 1/2-inch edges are at the top and bottom.

3. Measure and mark the right-hand edge of the cloth 1 1/4 inches up from the lower right-hand corner.

4. Measure and cut 6 1/2-inch length of 2-inch pile tape.

a. With pile facing up and the length of the pile tape positioned with its right edge aligned with the right edge of the cloth, place lower right-hand corner of pile tape at the 1 1/4-inch mark made in step 3.

b. Sew the left edge of the pile tape in place.

c. Sew the top and bottom of the pile tape in place to within 3/4 inch of the right edge of the cloth.

5. From the lower left-hand corner of the sewn pile tape, measure up 2 1/2 inches and mark the position on the left edge of the tape.

6. Measure and cut a 5 1/4-inch length of 2-inch pile tape.

a. Place pile tape next to the sewn edge of the pile tape attached in step 4b aligning the top edges and ensuring the lower right-hand corner of the tape is positioned at the 2 1/2-inch mark made in step 5.

b. Sew all edges of the 5 1/4-inch pile tape in place.

c. Measure and mark a line down the center of the 5-1/4-inch length of pile tape.

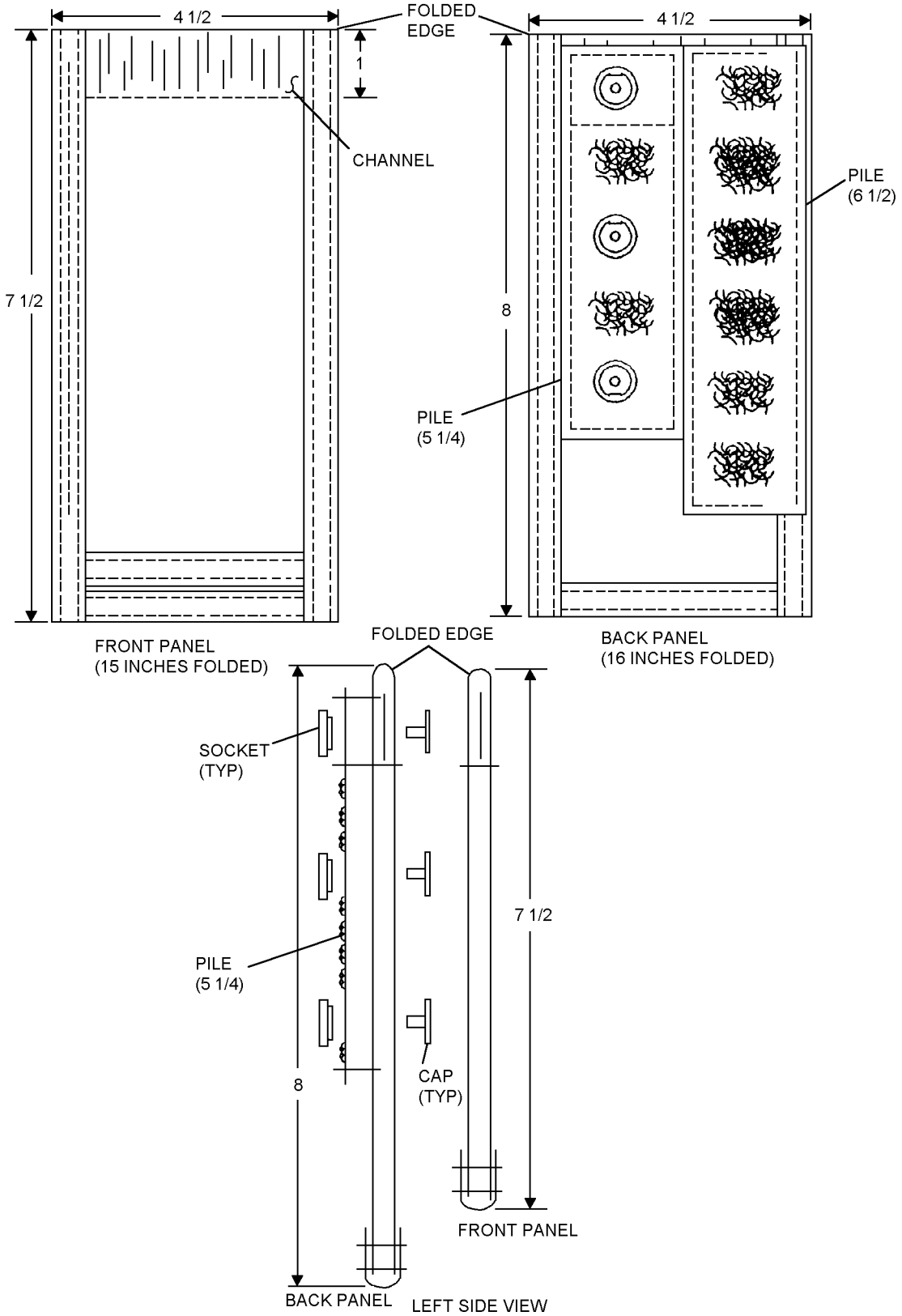

Figure 7-12. Fabrication of CBR Hose Pocket Assembly

d. Measuring up the center line from the bottom edge of the 5 1/4-inch tape, mark positions at 3/4 inch, 2 3/4 inches, and 4 3/4 inches.

7. Fold the panel in half leaving the 4 1/2-inch folded edge as the top.

a. Bind the bottom edge of the panel with 1-inch textile tape.

b. Measure and mark the right and left edges 1 inch down from the folded edge of the top.

c. Draw a sew line connecting the 1-inch marks.

d. Sew along the sew line to 3/4 inch from the right edge creating a 1-inch wide channel.

8. Measure and cut a 3-inch length of 1-inch elastic and slide the elastic through the channel created in step 7d.

9. Align the right end of the elastic with the right edge of the channel.

10. Fold back the 6 1/2-inch pile tape installed in steps 4 through 4c and sew the right end of the elastic to the pile tape (through the elastic and the nylon fabric, not through the pile tape).

7-42. Fabrication of Front Panel of HABD Hose Pocket. Refer to Figure 7-12 and proceed as follows:

1. Measure and cut a piece of nylon duck cloth 15 inches X 4 1/2 inches.

2. Orient the cloth so the 4 1/2-inch edges are at the top and bottom.

3. Fold the cloth in half so the 4 1/2-inch folded edge is now at the top.

4. Bind the two bottom edges with 1-inch textile tape.

5. Measure and mark right and left edges 1 inch down from the top folded edge.

a. Draw a sew line connecting the 1-inch marks.

b. Sew along the sew line creating a 1-inch channel.

6. Measure and cut a 3-inch length of 1-inch elastic and slide the elastic into the channel.

7. Align one end of the elastic with one of the edges of the channel and sew the edges together.

7-43. Assembly of the HABD Hose Pocket. Refer to Figure 7-12 and proceed as follows:

1. Place the back panel on top of the front panel with the pile tape side of the back panel facing up and the sewn elastic edges of each panel aligned, one on top of the other.

2. Align the top edges, top corners, and the left and right edges of the panels.

3. Fold back the 6 1/2-inch pile tape and bind the right edges of the panels together with 1-inch textile tape.

4. Sew right edge of 6 1/2-inch pile tape in place over binding tape.

5. Stretch remaining edge of elastic of back panel through the channel to opposite edge and sew in place.

6. Punch holes through back panel only at 3/4-inch, 2 3/4-inch, and 4 3/4-inch marks made on center line of pile tape in step 6d, paragraph 7-41.

a. Set caps and sockets in holes so sockets show on the pile tape side.

b. The top two sockets shall have their flat locking edge on top and the lowest socket shall have the flat locking edge toward the bottom (see Figure 7-12).

7. Stretch elastic of the front panel through channel to opposite edge and sew remaining edge in place.

8. Bind left edges of panels together using 1-inch textile tape.

7-44. Attachment of HABD Bottle Pocket. Refer to Figure 7-10 and proceed as follows:

1. Locate the point between the attachment point of the snap panel to the vest and the bottom edge of the side fastener tape of the general pocket.

2. Draw a line outlining where the right edge of the snap panel lays on the vest.

3. Carefully remove the stitching from the right edge of the snap panel that attaches the panel to the vest.

4. Measure and mark a line 1/2 inch to the left of the snap panel edge line.

5. Place the bottle pocket on the vest with the bottom of the bottle pocket just above the edge of the lower binding on the vest.

6. Align the 4 3/4-inch seared edges with the 1/2-inch line on the vest and the 1/2-inch marks on the pocket with the line from the snap panel edge.

7. Sew the bottle pocket in place with two rows of stitches side by side beginning 1/4 inch from the seared edge of the 4 3/4-inch side. Be careful not to sew beyond the stitching of the bottle pocket.

7-45. Attachment of the HABD Bottle Neck Strap. Refer to Figure 7-10 and proceed as follows:

1. Locate the binding on the top edge of the vest.

2. Measure and mark 1 inch to the left of the snap panel edge line at the bottom edge of the binding.

3. Orient the bottle neck strap so the folded edge is on the left edge and the bead is on the right.

4. Place the top corner of the fold at the 1-inch mark.

5. Sew strap in place with two rows of stitches side by side 1-inch from the folded edge.

6. Resew the snap panel onto the vest using two rows of stitches along the original stitch lines.

7-46. Attaching Hook Tape to CBR Pusher Fan Battery Pocket When Using the HABD Bottle. Refer to Figure 7-13 and proceed as follows:

1. Measure and cut a 5-inch length of 2-inch hook tape.

2. Locate top left corner of the right side panel of the CBR fan battery pocket.

3. Place the hook tape on the battery pocket aligning the 2-inch edge of the hook tape with the top edge of the pocket and the left edge of the pocket.

4. Sew hook tape in place.

7-47. REMOVAL AND DISPOSITION OF THE HELICOPTER EMERGENCY EGRESS DEVICE, SRU-36/P. Prior to beginning the modification in accordance with ACC 639 the SRU-36/P and its supporting modifications must be removed from the vest as follows:

1. Remove the SRU-36/P from the pistol pocket and return it to supply in F condition.

2. Remove stitching securing the SRU-36/P tether inside the pistol pocket; remove and discard the tether.

3. If vest is configured with the SRU-36/P pocket assembly, P/N 1774AS304-1, unsnap pocket assembly from vest and return it to supply in F condition.

7-48. STOWING THE SRU-40/P HELICOPTER AIRCREW BREATHING DEVICE (HABD) IN RECONFIGURED SURVIVAL VEST. Ensure the SRU-40/P HABD has been inspected in accordance with NAVAIR 13-1-6.5 and proceed as follows:

1. Check to ensure HABD is in RFI condition.

2. Place HABD in prepared pocket and secure bottle neck strap around bottle neck.

3. Route regulator hose down through top of hose pocket in a single U-shaped loop, leaving regulator out.

7-49. Stowing Non-CBR Configuration.

1. Pass a plastic tie wrap through the center of the mouthpiece cover, around the top and through both grommets.

2. Secure tie wrap so it is tight around the cover, but not pinching.

3. Place regulator inside mouthpiece cover and position the mouthpiece so it is between the bottle and the regulator with the regulator purge cover facing toward the entrance slide fastener of the vest.

7-50. Stowing CBR Configuration.

1. Pass plastic tie wrap through the center of the mouthpiece cover, around the narrowest part of the cover and through both grommets.

2. Secure the tie wrap tightly around the cover.

3. Place regulator inside mouthpiece cover and position the mouthpiece so it is between the bottle and the regulator with the regulator purge cover facing toward the entrance slide fastener of the vest.

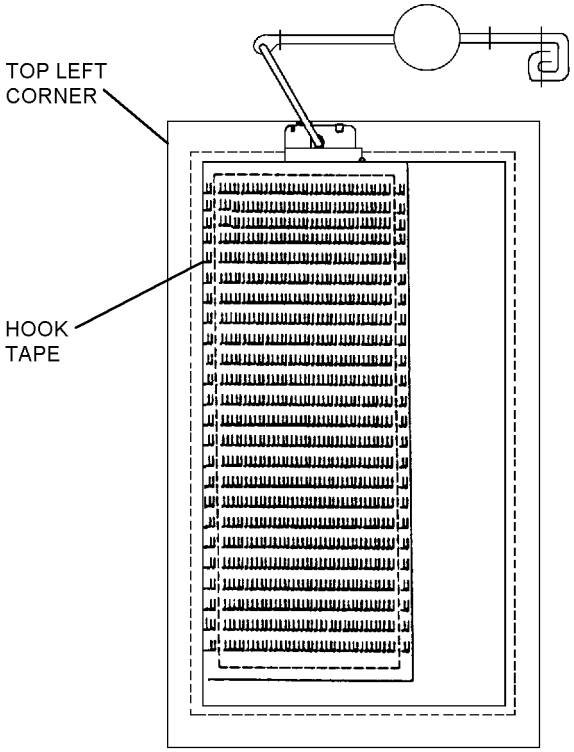

7-13

Figure 7-13. Attachment of Hook Tape to CBR Fan Battery Pocket

7-51. FABRICATION AND INSTALLATION OF SDU-39/N DISTRESS STROBE LIGHT LANYARD. The following instructions for fabrication and installation of the SDU-39/N lanyard should be used for all applications of the SDU-39/N strobe light (Figure 7-14).

Materials Required

Quantity	Description	Reference Number
As Required	Webbing, Nylon, Yellow	MIL-T-5038, NIIN 00-190-0521
As Required	Thread, Size E, Yellow	V-T-295 NIIN 00-263-9931
	-or-	
As Required	Thread, Green, or OD, or Sage Green	NIIN 00-204-3884 NIIN 01-162-4444 NIIN 00-616-0079
As Required	Cord, Nylon, Type 1	NIIN 00-240-2154
	-or-	
As Required	Cord, Nylon, Type 1A	NIIN 00-292-9920

1. Sear cut a 16 1/2-inch length of nylon webbing.

2. Fold webbing in half aligning ends.

3. Measure and mark 3 3/8-inches from folded end of webbing.

4. Measure 1/2-inch from folded edge and sew 3/4 X 3 ±1/4-inches cross boxstitch in webbing.

5. Sew a 3/4 X 3 1/4 ±1/8-inches cross boxstitch 1/8 inch from seared ends of webbing.

6. Sear a 5/8-inch hole 4 inches from seared end of webbing.

7. Sew boxstitch with 5/8-inch hold made in step 6 centered in boxstitch.

8. Sear cut a 54 ±1-inch length of Type I (with core strands removed) or 1A coreless nylon.

9. From one end of the nylon cord measure and make a mark at the 3-inch measurement and the 6-inch measurement.

10. At the 3-inch measurement make an overhand knot.

11. At the 6-inch measurement attach cord to top of switch clip using a larks head loop.

12. Cut a 1-inch piece of tape. Pull larks head loop snug and wrap tape around the running ends of nylon cord. Tape should be wrapped snug and close to the larks head loop to prevent the loop from coming loose.

13. Insert short end of nylon cord through webbing fold of fabricated strobe light lanyard. Center the lanyard between the overhand knot at the 3-inch measurement and the wrapped electrical tape.

14. Route short end of nylon cord, right to left, through lanyard hole located at the bottom of the ON/OFF switch track. If needed, use a piece of wire or equivalent as a bodkin tool to assist in routing the nylon cord through the lanyard holes.

NOTE

Switch clip shall be positioned over the ON/OFF switch so the sides of the clip slide over the switch track when set in place.

15. Place right side of the switch clip into the right lanyard hole, pull nylon cord until the 3 inch overhand knot is snug against the switch track. This will hold the right side clip end in place.

16. Place the left side of the clip into the left hole of the switch track.

17. Tie an overhand knot snug against the left hole of the switch track.

18. Place clip over ON/OFF switch so the sides of the clip slide over the switch track. If clip is loose, gently squeeze clip sides together to get a tighter fit.

19. Using an etching tool, etch the new superseding P/N to either of the narrow sides of the outer casing.

20. Secure long end of cord to loop inside the stowage pocket and secure using a bowline knot.

21. Stow the SDU-39 distress marker light in the pocket with the IR lens cap snapped securely in place, dome facing down. Place ON/OFF switch in the OFF position and facing inboard toward the wearer. Fake excess nylon cord together, secure with light rubber band and stow in pocket with light.

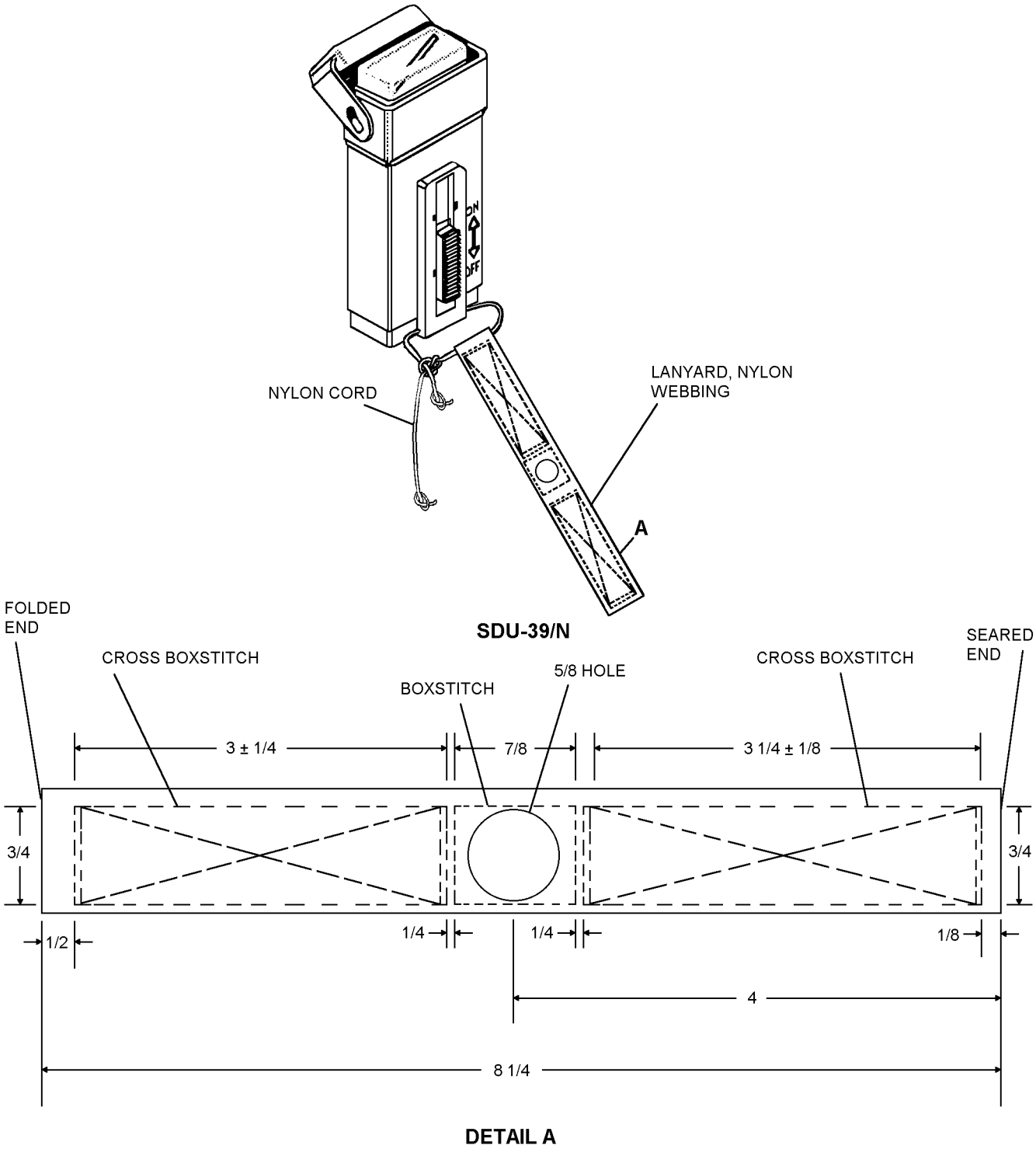

7-14

Figure 7-14. Fabrication of SDU-39/N Distress Strobe Light Lanyard

Section 7-3. Small Arms Protective Soft and Hard Body Armor PRU-60/P22P-15 and PRU-61/P22P-15

7-52. GENERAL.

7-53. The Soft Small Arms Protective Body Armor, PRU-60/P22P-15, of the Helicopter Aircrew Survival and Armor Protective Assembly will provide aircrewmembers with protection from small arms such as .44 magnum and 9mm as well as certain ballistic fragments. The Hard Small Arms Protective Body Armor, PRU-61/P22P-15, will provide increased protection for vital organs of the torso against up to .30 caliber armor-piercing bullets. If the CMU-30/P22P-15 vest is not worn, the soft armor may be worn using the front, back and side sections. If only the front soft armor is desired for protection in the helicopters with armored seats, with or without the side sections, the H-harness must be worn for support. Similarly, the front hard armor may be worn without the back hard armor, but the front hard armor depends upon the soft armor casing as a carrier. Therefore, the soft armor must be worn in order to wear the front hard armor. Also the vest must be worn in order to wear both the front and back hard armor because of the necessary quick disconnect and back armor retaining straps.

7-54. CONFIGURATION.

7-55. The complete protective body armor assembly configuration includes the following (Table 7-4 and Figure 7-15):

1. Soft Armor Casing (SM, MED, L, XL):

   a. Front (SM, MED, L, XL)

   b. Back (SM, MED, L, XL)

   c. Sides (SM, MED, L, XL)

2. Soft Ballistic Inserts:

   d. Front (SM, MED, L, XL)

   e. Back (SM, MED, L, XL)

   f. Sides (SM, MED, L, XL)

3. Hard Armor Encasements:

   g. Front (SM, MED, L, XL)

   h. Back (SM, MED, L, XL)

4. Hard Ballistic Armor Inserts:

   i. Front (SM, MED, L, XL)

   j. Back (SM, MED, L, XL)

7-56. Soft ballistic insert assemblies are constructed of a multi-layered, ballistic, high-strength aramid cloth encased in a water-repellent nylon cover. Inserts are placed inside the casings. The soft ballistic insert assemblies provide wrap-around coverage and some fragmentation protection for the upper body. Casings are fitted to the aircrewmember shoulder and side straps with hook and pile tape. The casing assemblies for the side soft ballistic inserts fit to the front and back casing assemblies through a combination of hook and pile fasteners and snap fasteners.

1. If wearing only the front soft armor is desired, an H-harness is available. The H-harness is worn on the crewmember's back and the hook and pile on the H-harness straps attach to the respective hook and pile on the front soft armor.

2. The hard ballistic inserts are constructed of a ceramic, ballistic, composite material and a nylon spall shield. The nylon spall shield will effectively contain most projectile and ceramic spalling and provides a high degree of anti-fracturing capability. The front hard ballistic armor (Figure 7-15) fits into a material lip on the front of the soft armor casing assembly and is secured with hook tape on the back of the encasement. The back hard ballistic armor (Figure 7-16) has a quick-disconnect system of straps which attach to the front of the CMU-30/P22P-15 with a beaded pull-handle for ease of release. This system was designed for a one-hand, two-operation actuation for hard armor removal. The CMU-30/P22P-15 vest has two straps which fold over the bottom of the back hard armor, forming support and securing the hard armor by pressing the hook tape on the vest straps (Figure 7-15) to the pile tape on the hard armor encasement (Figure 7-16). The front and back hard armor encasements which cover the hard ballistic inserts, are designed to allow replacement or repair of the covers and their components.

Table 7-4. Major Components for Soft and Hard Armor Assemblies

Nomenclature	Quantity	Size	Reference Number
Soft Small Arms Protective Body Armor (PRU-60/P22P-15)	1	Small	3241AS201-1
	1	Medium	3241AS201-2
	1	Large	3241AS201-3
	1	Extra Large	3241AS201-4
Casing Assembly, Front	1	Small	3241AS288-1
	1	Medium	3241AS289-1
	1	Large	3241AS290-1
	1	Extra Large	3241AS291-1
Casing Assembly, Side	1	Small	3241AS288-3
	1	Medium	3241AS289-3
	1	Large	3241AS290-3
	1	Extra Large	3241AS291-3
Casing Assembly, Back	1	Small	3241AS288-4
	1	Medium	3241AS289-4
	1	Large	3241AS290-4
	1	Extra Large	3241AS291-4
Soft Ballistic Insert Assembly, Front	1	Small	3241AS280-1
	1	Medium	3241AS281-1
	1	Large	3241AS282-1
	1	Extra Large	3241AS283-1
Soft Ballistic Insert Assembly, Side	1	Small	3241AS280-2
	1	Medium	3241AS281-2
	1	Large	3241AS282-2
	1	Extra Large	3241AS283-2
Soft Ballistic Insert Assembly, Back	1	Small	3241AS280-3
	1	Medium	3241AS281-3
	1	Large	3241AS282-3
	1	Extra Large	3241AS283-3
H-Harness	1	one size fits all	3241AS204
Hard Small Arms Protective Body Armor (PRU-61/P22P-15)	1	Small	3241AS401-1
	1	Medium	3241AS401-2
	1	Large	3241AS401-3
	1	Extra Large	3241AS401-4
Encasement Assembly, Front	1	Small	3241AS403-1
	1	Medium	3241AS403-2
	1	Large	3241AS403-3
	1	Extra Large	3241AS403-4
Hard Ballistic Insert, Front and Back	1	Small	3241AS402-1
	1	Medium	3241AS402-2
	1	Large	3241AS402-3
	1	Extra Large	3241AS402-4
Pull Handle Assembly (Beaded)	1	—	3241AS404-1
Quick Disconnect Strap Assembly	2	—	3241AS404-2
Back Armor Retaining Strap Assembly	2	—	3241AS404-3

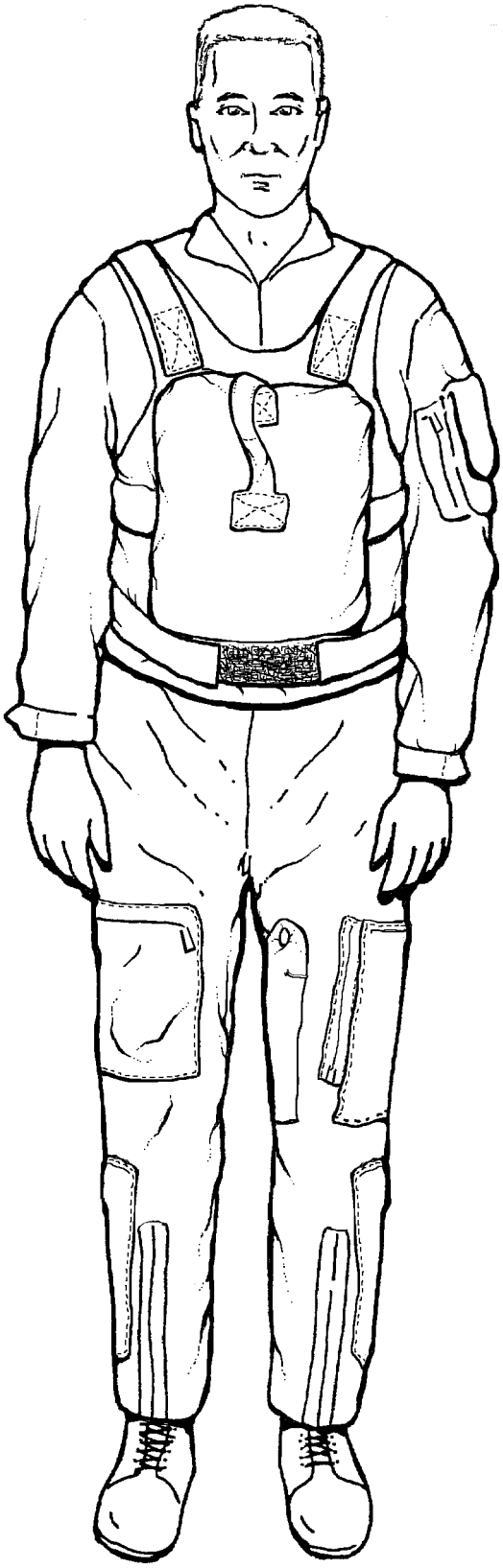

FRONT VIEW

7-15-1

Figure 7-15. Soft and Hard Armor Assemblies (PRU-60/P22P-15 and PRU-61/P22P-15) (Sheet 1 of 2)

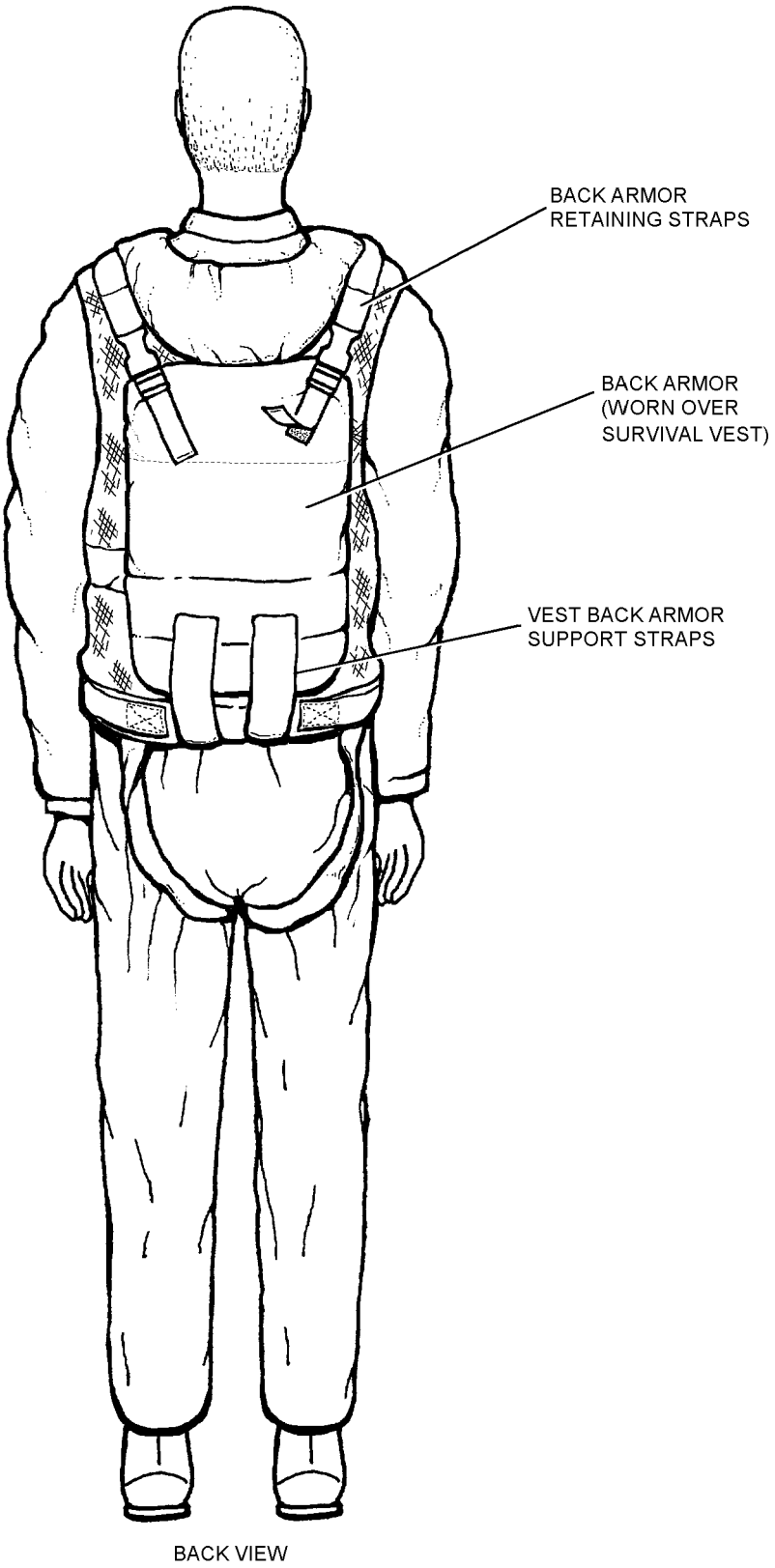

7-15-2

Figure 7-15. Soft and Hard Armor Assemblies (PRU-60/P22P-15 and PRU-61/P22P-15) (Sheet 2 of 2)

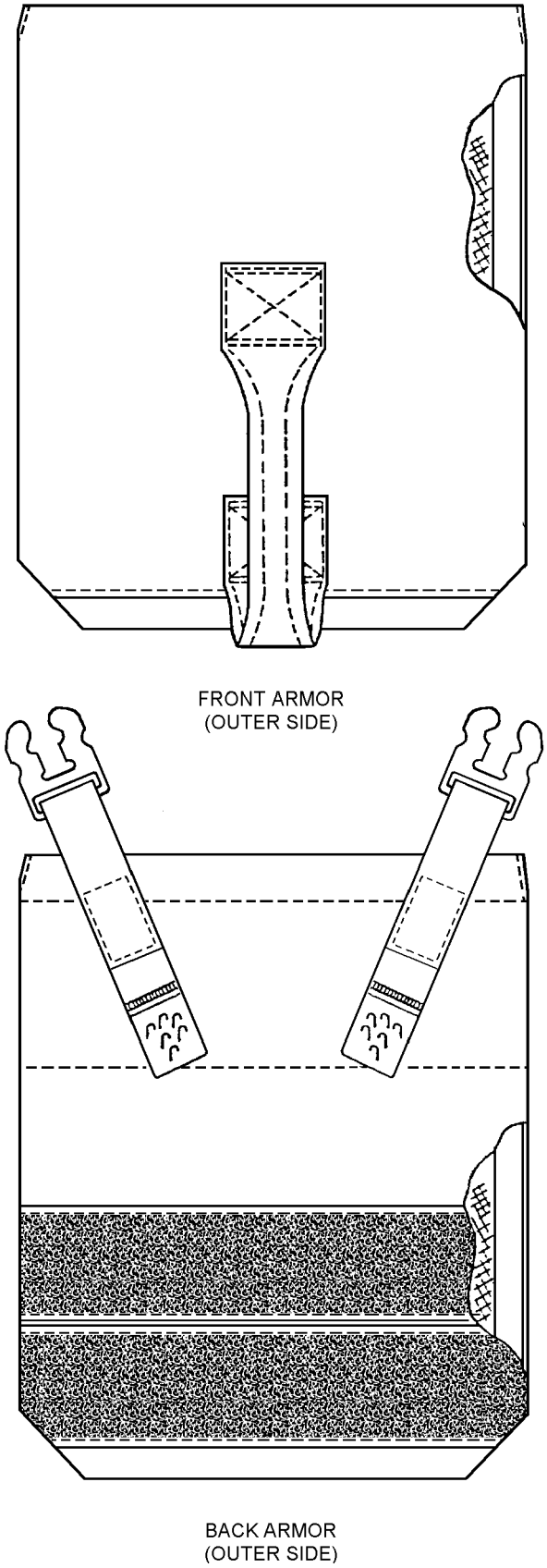

Figure 7-16. Hard Ballistic Armor Assemblies - Front and Back

7-57. APPLICATION.

7-58. The Helicopter Aircrew Survival and Armor Protective Assembly is designed specifically for use by helicopter aircrewmembers. When back and side-armored seats are available on helicopters operating in combat areas, pilots/copilots may wear only the front soft armor with a hard ballistic armor insert in front. Otherwise the full soft armor with both front and back hard armor is worn by the entire aircrew. Soft armor is available to helicopter aircrews operating outside direct combat areas.

7-59. APPLICABLE COMBINATIONS: (See Table 7-5).

1. Front, back, and side soft ballistic insert assemblies with front and back hard ballistic armor inserts.

2. Front, back, and side soft ballistic insert assemblies with front hard armor only.

3. Front, back, and side soft ballistic insert assemblies and no hard armor.

4. Front and back soft ballistic insert assemblies with the front and back hard armor.

5. Front and side soft ballistic insert assemblies with the H-harness and the front hard armor.

6. Front and side soft ballistic insert assemblies with the H-harness and no hard armor.

7. Front and back soft ballistic insert assemblies and the front hard armor.

8. Front soft ballistic insert assembly with the H-harness and the front hard armor.

9. Front soft ballistic insert assembly with the H-harness and no hard armor.

NOTE

The local commander may specify which configuration aircrewmembers shall wear based upon the particular aircraft flown and type of mission.

Table 7-5. Applicable Combinations

	Front Soft Ballistic Insert Assy	Side Soft Ballistic Insert Assy	Back Soft Ballistic Insert Assy	H-Harness	Front Hard Armor Plate	Back Hard Armor Plate	Front Casing Assy	Side Casing Assy	Back Casing Assy
1	X	X	X		X	X	X	X	X
2	X	X	X		X		X	X	X
3	X	X	X				X	X	X
4	X		X		X	X	X		X
5	X	X		X	X		X	X	
6	X	X		X			X	X	
7	X		X		X		X		X
8	X			X	X		X		
9	X			X			X		

7-60. FITTING.

7-61. The body armor system assembly is fitted to the aircrewmember on a best-fit basis, with insert assemblies and plate(s) installed as applicable to the configuration desired. Armor sizes available for the aircrewmembers for soft and hard armor are indicated in Table 7-6.

Table 7-6. Fitting Soft and Hard Armor Assemblies

Size	Chest (Inches)	Centimeters
Small	Up to 36	Up to 91
Medium	37 - 40	92 - 102
Large	41 - 44	103 - 112
X-Large	Over 44	Over 112

1. A properly fitted survival and armor protective assembly will allow for soft ballistic inserts to be located so they extend from the waist to the collar bone. The location of the flexible, side, soft ballistic inserts and hard ballistic armor inserts may subsequently be adjusted within the limits of the hook and pile attachments to provide optimum protection and proper fit.

NOTE

The body armor must fit snugly to the person to provide maximum effective protection and coverage of the torso.

2. The armor used in the survival and armor protective assembly will be sized to correspond with casing size. An aircrewmember requiring a small assembly will use small sizes of the soft ballistic inserts and hard armor plates. The back armor retaining strap may be adjusted to position the back hard ballistic armor properly.

3. Since there are only two sizes of vests (medium and large) and four sizes of body armor, Table 7-7 lists compatible size combinations.

Table 7-7. Soft and Hard Body Armor Size Combinations

Vest	Soft Armor	Hard Armor
Medium	Small	Small
Medium	Medium	Medium
Large	Large	Large
Large	X-Large	X-Large

7-62. MAINTENANCE.

7-63. Maintenance of the Small Arms Protective Soft and Hard Body Armor, PRU-60/P22P-15 and PRU-61/P22P-15, respectively, shall consist of preflight, postflight, acceptance/special inspections, and minor repairs of the soft and hard armor casing and encasement assemblies. Minor repairs shall be limited to mending small rips and tears, restitching broken seams, and replacement of snap fasteners and hook and pile fastener tape. Repair actions shall be performed at lowest technically capable maintenance level. All maintenance actions and inspections shall be documented in accordance with COMNAVAIRFORINST 4790.2.

7-64. ACCEPTANCE/SPECIAL INSPECTION. The Acceptance/Special Inspection of the soft and hard small arms body armor assemblies shall be performed by organizational maintenance or above. Inspections shall be performed upon receipt from the manufacturer, prior to being placed in service. The special inspection shall include the following:

1. Verify that all components are present and complete.

2. Remove all soft inserts and/or hard inserts.

3. Inspect soft armor casings and/or the hard armor encasements for cuts, tears, and/or abrasions.

4. Inspect soft armor casings and hard armor encasement stitching for holes, tears, and/or loose seams.

5. Inspect soft armor casings and hard armor encasement hook and pile fasteners for secure attachment and closure.

6. Inspect all soft armor casings and hard armor encasement fasteners for damage, security, and ease of operation.

7. Inspect hard ballistic armor inserts for any evidence of dropping (i.e. dents or cracks) or any other mishandling.

8. Inspect soft ballistic insert assemblies for any rips or tears in the water repellent covers or damage to ballistic aramid cloth.

9. Document inspection in accordance with COMNAVAIRFORINST 4790.2.

7-65. CLEANING. Regular cleaning of the body armor assemblies will lengthen the life of the fabrics.

7-66. Soft Ballistic Inserts. Clean soft ballistic inserts as follows:

1. Remove soft ballistic insert assemblies from the casing assembly.

CAUTION

Do not soak soft ballistic insert assemblies or use bleach or starch.

2. Using a damp cloth, wipe the cover of the soft ballistic insert until clean.

CAUTION

Do not leave ballistic aramid cloth exposed to direct sunlight. Continuous exposure to ultraviolet rays for an extensive period of time will seriously deteriorate the soft armor.

3. Set to dry in open, well ventilated area.

7-67. Hard Ballistic Inserts. Clean hard ballistic armor inserts as follows:

1. Remove the hard ballistic armor inserts from their encasements.

2. Wipe clean with a damp cloth.

3. Dry with a cloth/paper towel or set to air dry.

7-68. Casing Assembly. Clean casing assembly as follows:

Materials Required

Quantity	Description	Reference Number
As Required	Detergent, Laundry	Commercial

WARNING

Ensure all soft ballistic insert assemblies have been removed prior to washing the casing assembly. Although the soft ballistic insert assemblies are covered with water repellent nylon, water may seep through the stitching. Upon drying, high-strength aramid cloth recovers its original ballistic characteristics. However, water may be retained within the water-repellent cover if the insert is subjected to washing with the casing assembly. When wet, untreated aramid cloth could lose up to 40% of its ballistic capability thereby becoming a threat to the wearer's safety.

NOTE

Detergent shall be mixed in accordance with instructions on detergent container. Wash casing assembly only with other high temperature resistant, flame retardant materials (textile aramid flame retardant).

1. Fasten the hook and pile to prevent entangling with other articles.

WARNING

JP-5 fuel, grease or other combustibles embedded in casing assembly fabric will burn at their normal flash points even though the aramid cloth will not burn until a higher temperature is reached. Be sure the casing assembly is thoroughly clean and free of combustibles prior to further use. Dry clean or machine wash as necessary.

2. Immerse casing assembly in a proper mixture of a commercial laundry detergent and luke-warm water.

NOTE

Heavily soiled and/or stained casing assemblies may require high-temperature water for best cleaning. Casing assemblies that are heavily soiled and/or stained with oil or grease may be pre-treated with a commercial pre-wash detergent.

a. Allow casing assembly to soak for five minutes. Agitate gently (by hand) for two minutes and drain water.

3. Rinse casing assembly in cool, fresh water and drain the water. Repeat rinsing until all traces of detergent have disappeared from the rinse water.

CAUTION

Do not dry casing assembly in direct sunlight.

4. Hang casing assembly on a wooden or plastic hanger in a dry, well-ventilated area away from heat and any open flame.

5. Remove loose dirt from hook and pile fastener and outer cover surface using a cloth or soft brush. Do not use a stiff bristle brush.

7-69. CORRECTIVE MAINTENANCE. Corrective maintenance of the soft and hard body armor assemblies and hard armor plate encasement assemblies shall be limited to the general maintenance instructions discussed in paragraph 7-62. No maintenance is authorized on the hard armor plates. If the hard armor plates are dropped or receive other abnormal treatment, or a defect is suspected, they shall be inspected by a nondestructive method at I-level. The I-level inspection will determine if the plates are to be discarded, returned to the manufacturer for further inspection, or reissued. The soft ballistic inserts must be replaced if their ballistic aramid cloth is damaged. If damage is found such as tears in the ballistic aramid cloth, badly worn areas in which the thread used to sew layers together is damaged, or evidence that the fabric is unravelling, the ballistic insert shall be replaced. Small rips or tears in the water-repellent black covers of the soft ballistic insert assemblies may be repaired using any water repellent tape compatible with nylon under the following conditions:

1. No damage to the ballistic aramid cloth is found.

2. There is no moisture inside the insert (the ballistic aramid cloth).

3. The repair material is also water-repellent.

4. After repair, the insert cover remains water-repellent.

CAUTION

The hard body armor is made of fragile ceramic material and must be handled carefully. The hard armor plates should be inspected before each operational use to ensure there are no surface cracks which might degrade ballistic protection. Hard armor plate must be replaced if it is cracked, has been hit, or received rough treatment in any way which may cause damage. For example, if an unprotected hard armor plate hits a hard surface at the speed of 12 feet/second (i.e. a drop from a height equal to one yard onto a tile floor) the armor should be sent to I-level for further inspection by an authorized representative, even if there is no visible damage to the exterior of the plates.

NOTE

The ballistic nylon spall shield which covers the ceramic plates could conceal interior damage to the ceramic material of the hard armor.

Hard armor may be reissued if it is determined to be acceptable by I-level after radiographic inspection in accordance with MIL-STD-453 by an operator qualified in accordance with MIL-R-11470.

7-70. REPAIR AND REPLACEMENT.

7-71. CASING ASSEMBLY, SOFT AND HARD ARMOR. Repairs on casing assemblies shall be performed at the lowest technically capable maintenance level, using an industrial/medium-duty sewing machine and high temperature-resistant nylon thread. Repairs shall be limited to mending small rips and tears, restitching loose seams, and replacing fastening devices.

7-72. Hook and Pile Fastener Tapes. Replace hook and pile fastener tapes as follows:

Materials Required

Quantity	Description	Reference Number
As Required	Fastener, Tape, Hook, Type II, Class 1, Olive Green, 1-Inch and 2-Inch	MIL-F-21840 NIIN 00-106-5973 NIIN 00-450-9837
As Required	Fastener, Tape, Pile, Type II, Class 1, Olive Green, 1-Inch and 2-Inch	MIL-F-21840 NIIN 00-106-5974 NIIN 00-926-4930
As Required	Thread, Nylon, Size E, Olive Green	V-T-295 NIIN 00-244-0609

1. Carefully cut stitching and remove damaged fastener tape.

2. Cut new fastener tape the same length as the damaged fastener tape removed.

3. Position fastener tape in same location as fastener tape removed. Single row stitch 1/8 inch from edge on all four sides.

7-73. Snap Fasteners. Replace defective snap fasteners as follows:

Materials Required

Quantity	Description	Reference Number
As Required	Fastener, Snap, Button, Omni-directional	MS27980-1B NIIN 00-359-6844
As Required	Fastener, Snap, Socket, Omni-directional	MS27980-6B NIIN 00-285-6250
As Required	Fastener, Snap, Stud, Omni-directional	MS27980-7B NIIN 00-842-1879
	-or-	
As Required	Fastener, Snap, Eyelet, Omni-directional	MS27980-8B NIIN 01-023-3843
1	DOT Snapmaster	89-M840 (CAGE 13940)
1	Punch and Die Set for Omni-directional Snap Fastener	(4303, 4403) (CAGE 13940)

NOTE

When replacing a defective snap fastener, both sides (stud or socket and eyelet or button) must be replaced.

1. Using end cutters, remove damaged snap fastener stud or socket from mating eyelet or button.

2. Install new fasteners using DOT Snapmaster and punch (4303) and die (4403) set.

7-74. Elastic Cotton Webbing. Repair/replace side casing adjustment straps on back section soft armor casing assembly as follows:

Materials Required

Quantity	Description	Reference Number
As Required	Webbing, Cotton, Elastic, Olive Green, 2-Inch	MIL-W-5664 NIIN TBD
3 Inches	Fastener, Tape, Hook, 2-Inch, Olive Green	MIL-F-21840 NIIN 01-086-9635
As Required	Thread, Nylon, Size E, Olive Green	V-T-295 NIIN 00-244-0609

NOTE

All stitching shall be in accordance with ASTM-D-6193, Type 301 lockstitch, 7 to 10 stitches per inch with minimum 1/2-inch backstitch.

1. Remove damaged strap from casing assembly, using care not to damage the casing assembly.

2. Cut new straps, same length as straps removed, from 2-inch MIL-W-5664 cotton elastic webbing.

3. Fold end of cotton elastic webbing back 7/16 inch, place 3-inch section of hook tape over the fold-back webbing. Stitch hook tape to the cotton elastic webbing using size E nylon thread.

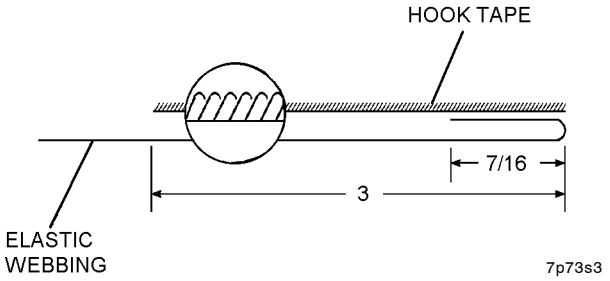

Step 3 - Para 7-74

4. Insert cotton elastic webbing back in casing assembly 3/4 inch and restitch seamline on casing assembly.

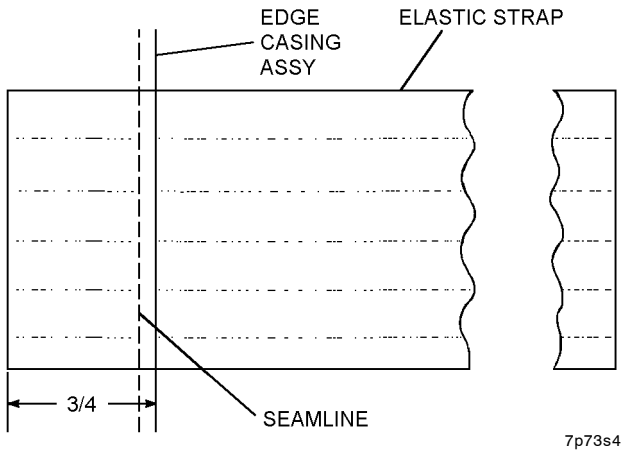

Step 4 - Para 7-74

7-75. Nylon Webbing Shoulder Straps. Replace/repair shoulder straps as follows:

Materials Required

Quantity	Description	Reference Number
15 Inches	Webbing, Nylon, Olive Green, Type XII, 1 23/32-Inch	MIL-W-4088 NIIN 00-281-3012
As Required	Thread, Nylon, Type II, Size E, Olive Green	V-T-295 NIIN 00-244-0609
3 1/2 Inches	Fastener, Tape, Pile, 2-Inch, Sage Green	MIL-F-21840 NIIN 00-405-2265

1. Mark casing assembly where existing damaged shoulder strap is located.

2. Cut stitching and remove damaged strap from casing assembly, using care not to damage the casing assembly.

3. Trim pile tape width from 2 inches down to 1 23/32 inch.

NOTE

All stitching shall be in accordance with ASTM-D-6193, Type 301 lockstitch, 7 to 10 stitches per inch with minimum 1/2-inch backstitch.

4. Fold one end of nylon webbing over 1/2 inch, place 6-inch section of pile tape on the overlapping section. Stitch pile tape to the nylon webbing using size E nylon thread.

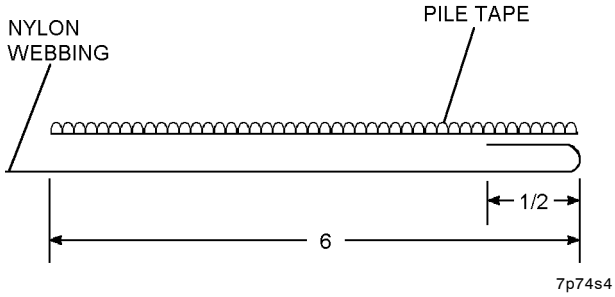

Step 4 - Para 7-75

NOTE

Remove soft ballistic insert from back casing assembly before attaching shoulder strap.

The back casing assembly is formed by two sections of textile aramid cloth between which is the soft ballistic insert. The shoulder strap is to be stitched only to the outer of the two sections.

5. Place nylon webbing at markings where the damaged shoulder strap was removed. Ensure the side facing the casing assembly is also the side with the pile tape, located at the opposite end. Crossbox stitch nylon webbing in place.

7-76. FABRICATION/REPAIR OF H-HARNESS (Figure 7-17). The H-harness is fabricated as follows:

Materials Required

Quantity	Description	Reference Number
As Required	Webbing, 1 23/32-Inch, Type VII, Class 1, Sage Green	MIL-W-4088 NIIN 00-261-8585
As Required	Fastener Tape, Pile, 2-Inch, Type II, Class 1, Sage Green	MIL-F-21840 NIIN 00-405-2265
As Required	Fastener Tape, Hook, 2-Inch, Type II, Class 1, Sage Green	MIL-F-21840 NIIN 00-450-9837
As Required	Thread, Nylon, Size E, Type II, Class 1, Sage Green	V-T-295 NIIN 00-204-3884

1. Sear cut two 29 3/8-inch length and two 37-inch lengths of MIL-W-4088 webbing.

2. Fold under 1/2 inch at one end of each 29 3/8-inch length of webbing and double stitch in place.

3. In opposite end of each 29 3/8-inch length fold under 3/8 inch and double stitch in place.

NOTE

Each length is now 28 1/2 inches long.

4. Fold under 1/2 inch at each end of each 37-inch length and double stitch using 301 stitch, 8 to 10 stitches per inch, 1/8 inch from edges.

NOTE

Each length is now 36 inches long.

5. Sear cut two 3-inch lengths of pile fastener tape and trim width of each to 1 3/4 inches. Sew one 3-inch length of pile tape, pile side up, 1/4 inch from the end of each 28 1/2-inch webbing on the side which was folded under 1/2 inch. Use single stitch lengthwise and double stitch at ends using 301 stitch, 8 to 10 stitches per inch, 1/8 inch from edge of pile tape.

6. Sear cut four 3-inch lengths of hook tape and trim width of each to 1 3/4 inches.

7. Sew one 3-inch strip of hook tape 1/4 inch from each end of the two 36-inch lengths of webbing, hook side up, on the side of the webbing turned under in step 4 above. Use same stitching procedures used in step 5 above.

8. Lay the two 36-inch lengths horizontally on table parallel to each other, 1 3/4 inches apart with hook side down.

9. Lay the two 28 1/2-inch lengths, pile side down, vertically across the 36-inch horizontal lengths, positioned 13 3/4 inches from each end of the horizontal lengths and 4 1/2 inches from each other. The free end of each 28 1/2-inch length shall be flush with the lower edge of the near horizontal length of webbing (see Figure 7-17).

10. Crossbox stitch the four sections of webbing together as shown in Figure 7-17.

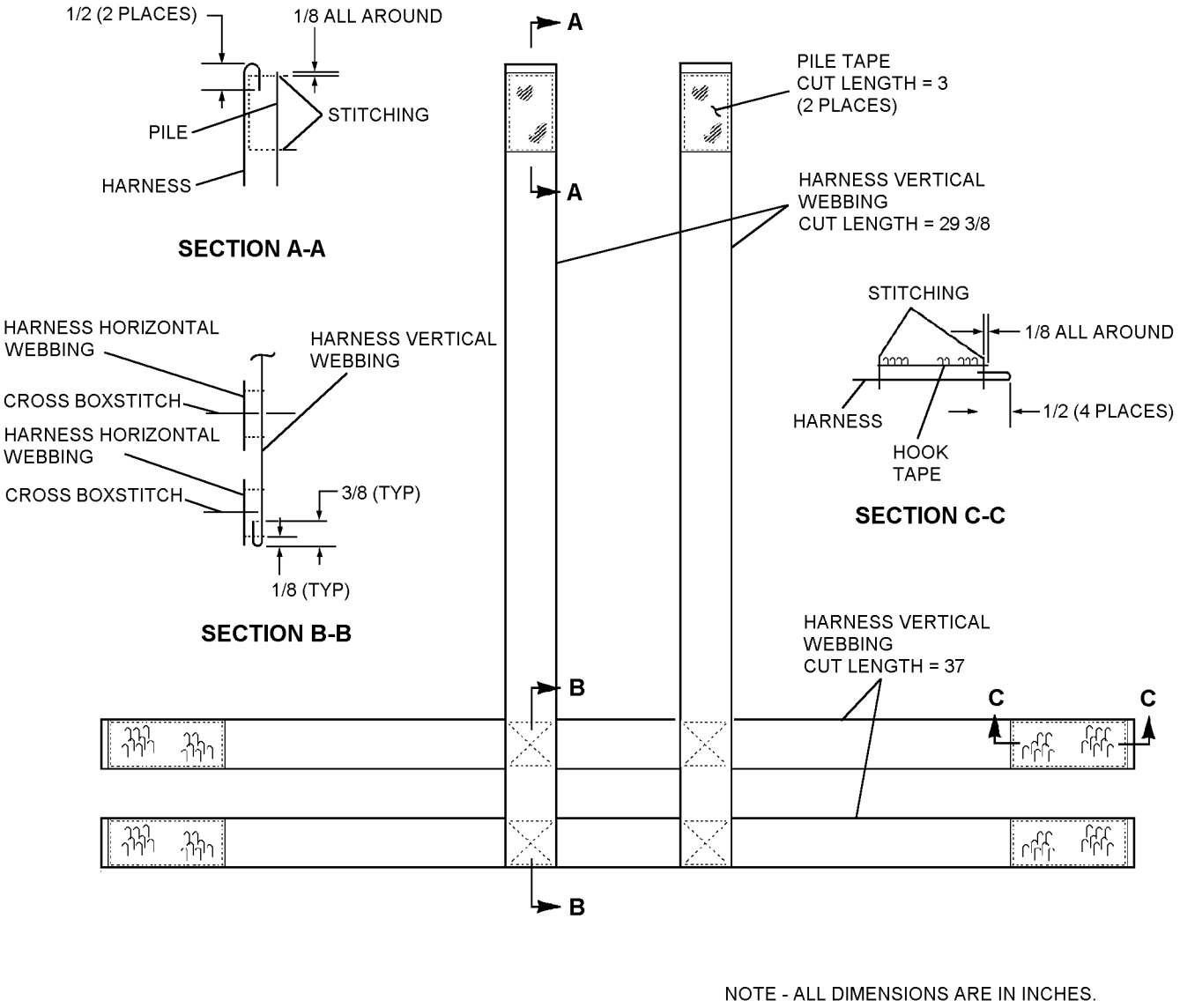

NOTE - ALL DIMENSIONS ARE IN INCHES.

7-17

Figure 7-17. H-Harness Assembly

7-77. FABRICATION/REPAIR OF ARMOR BEADED PULL HANDLE (Figure 7-18). Fabricate/repair armor beaded pull handle/quick-release assembly as follows:

Materials Required

Quantity	Description	Reference Number
As Required	Tape, Nylon, Type IV, Sage Green, 1-Inch	MIL-T-5038 NIIN 00-261-8579
As Required	Webbing, Type XV, 2-Inch	MIL-W-4088 NIIN 00-082-2142
1	Handle, Bead	975AS122-1 (CAGE 62323)
6	Fastener, Snap, Button, Omni-directional	MS27980-1B NIIN 00-359-6844
6	Fastener, Snap, Socket, Omni-directional	MS27980-6B NIIN 00-285-6250
2	Fastener, Snap, Stud, Omni-directional	MS27983-3 NIIN 00-276-4908
2	Fastener, Snap, Eyelet, Omni-directional	MS27983-4 NIIN 00-276-4978
As Required	Thread, Nylon, Size E, Sage Green	V-T-295 NIIN 00-204-3884
1	DOT Snapmaster	89-M840 (CAGE 13940)
1	Punch and Die Set, Omni-directional	4403, 4403, 4304, 4404 (CAGE 13940)
1	Punch and Die Set, Uni-directional	4305, 4305, 4304, 4404 (CAGE 13940)

1. Fabricate/repair beaded armor pull handle:

a. Sear cut one 9 1/2-inch length and one 5 5/8-inch length of MIL-T-5038 1-inch tape.

b. Sear cut one 21-inch length of MIL-W-4088 2-inch webbing.

c. Remove beads from pull handle under repair or use 6 beads from stock.

2. Fold 21-inch length of webbing in half to form 10 1/2-inch length. Stitch perimeter 1/16 inch from edge using size E thread.

3. Place 5 5/8-inch length of tape vertical on flat surface.

a. Make a 1 3/8-inch fold from top down toward center and make 1 3/8-inch fold from bottom up toward center so ends meet. The folded tape should now be approximately 2 3/4 inches long (see Figure 7-18).

b. Stitch perimeter of folded tape 1/16 inch from edge using size E thread.

c. Place 9 1/2-inch length of tape perpendicular to and centered on top of 2 3/4-inch tape completed in step 3b above. The right edge of the 2 3/4-inch tape shall be one inch from right end of 9 1/2 inch tape (see Figure 7-18).

d. Sew 9 1/2-inch tape onto 2 3/4-inch tape using 3/4 X 3/4-inch crossbox stitch and size E thread.

4. Place 10 1/2-inch length of 2-inch webbing in horizontal position on flat surface. Measure and mark horizontal center line.

a. Measure and mark 1 1/8-inch from right end of webbing center line.

b. Position 9 1/2-inch assembly from step 3d on center line with right edge of 2 3/4-inch tape centered at 1 1/8-inch mark on center line. This will place the right end of 9 1/2-inch tape 1/8 inch from right end of 10 1/2-inch webbing centered on center line of webbing (see Figure 7-18); single stitch end of tape in place using size E thread.

c. Extend 9 1/2-inch tape to left along center line of webbing and measure and mark tape 3 3/4 inches from right end. Fold tape back at 3 3/4-inch mark toward right, ensure center of tape width is on center line of webbing and double stitch tape to webbing 1/8 inch from fold line using size E thread.

d. Fold end of tape under 1/2 inch, lay flush with sewn end of tape, and box stitch 5/16 X 3/4 inch staying 1/16 inch from edges.

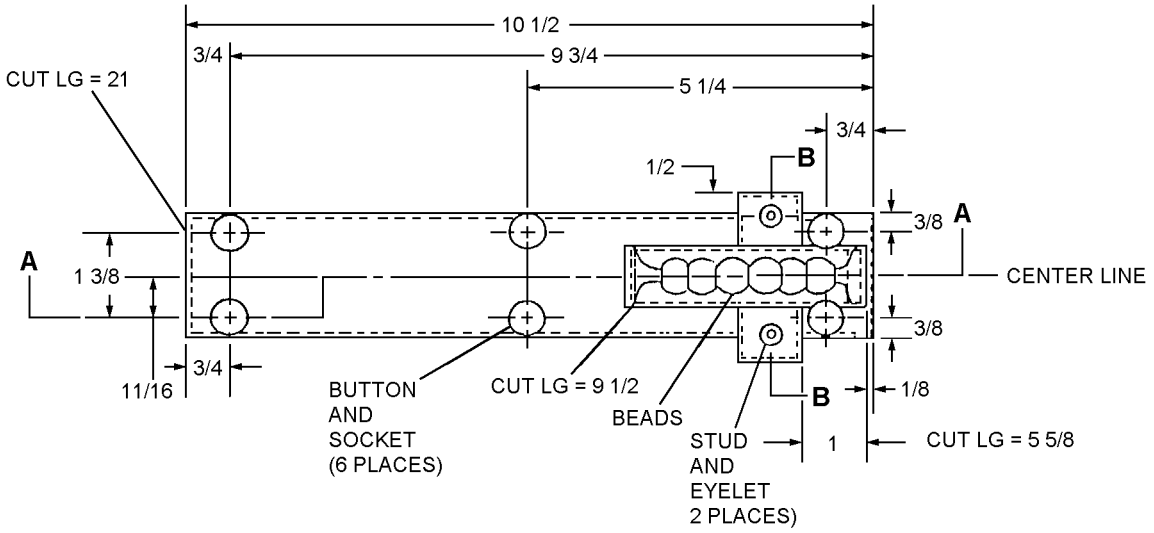

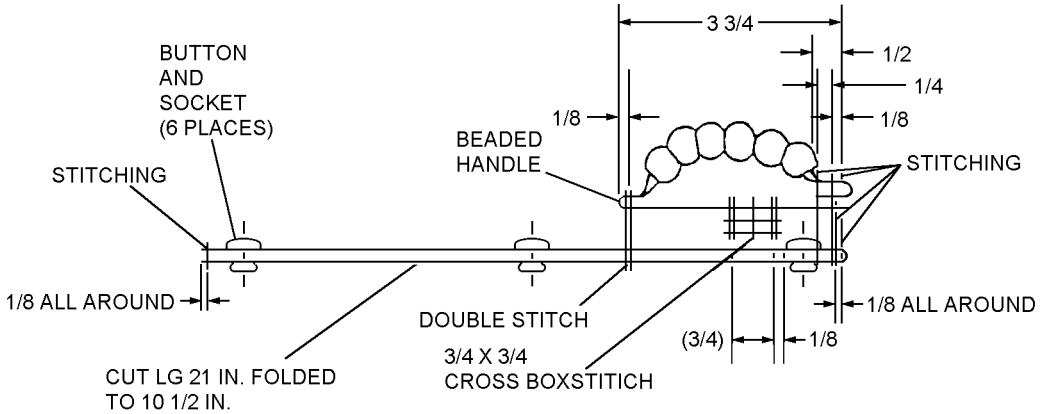

SECTION A-A

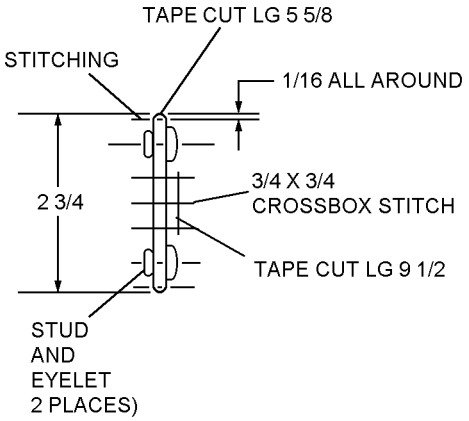

SECTION B-B

NOTE - ALL DIMENSIONS ARE IN INCHES.

7-18

Figure 7-18. Armor Beaded Pull Handle

5. Install/replace snap fasteners (Figure 7-18).

a. Position beaded armor pull handle assembly horizontally on flat surface with beaded handle up and to the right.

b. Measure and mark a line 3/8 inch from top and bottom edges across horizontal length of the handle assembly webbing.

c. Starting at right end of each horizontal line drawn in step 5b, measure and mark positions at 3/4 inch, 5 1/4 inches, and 9 3/4 inches.

d. Center punch a hole through the webbing at each of the six positions marked in step 5c. Using DOT Snapmaster and omnidirectional punch and die, install female snap fastener buttons (MS27980-1B) and sockets (MS27980-6B) facing down (buttons on top) at each position.

e. Locate 2 3/4-inch tape secured perpendicular to beaded handle. Measure and mark on center line 1/2 inch from each end.

f. Center punch a hole through tape at both positions marked in step 5e. Using DOT Snapmaster and omnidirectional punch and die, install snap fastener stud (MS27983-3) and eyelet (MS27983-4) facing up (eyelet on top) in both positions.

7-78. FABRICATION/REPAIR OF QUICK DISCONNECT STRAP ASSEMBLY (Figure 7-19). Fabricate/repair quick disconnect strap assembly as follows:

Materials Required

Quantity	Description	Reference Number
As Required	Tape, Nylon, Type IV, 1-Inch, Sage Green	MIL-T-5038 NIIN 00-261-8579
As Required	Tape, Nylon, Type III, 3/4-Inch, Sage Green	MIL-T-5038 NIIN 00-176-8083
As Required	Thread, Nylon, Size E, Type II, Class 1, Sage Green	V-T-295 NIIN 00-204-3884

Materials Required (Cont)

Quantity	Description	Reference Number
1	Fastener, Snap, Button, Omni-directional	MS27980-1B NIIN 00-359-6844
1	Fastener, Snap, Socket, Omni-directional	MS27980-6B NIIN 00-285-6250
4	Fastener, Snap, Button, Uni-directional	MS27983-1 NIIN 00-891-9073
4	Fastener, Snap, Socket, Uni-directional	MS27983-2 NIIN 00-893-6243
1	QR Strap Clip, Black, 3/4-Inch	627-0075 (CAGE 82399)
1	DOT Snapmaster	89-M840 (CAGE 13940)
1	Punch and Die Set, Omni-directional	4403, 4403 4304, 4404 (CAGE 13940)
1	Punch and Die Set, Unidirectional	4305, 4405 4304, 4404 (CAGE 13940)

1. Sear cut two 43 1/2-inch lengths of MIL-T-5038 3/4-inch tape.

a. Insert end of one tape through QR strap clip. Fold tape double and move clip to folded end.

b. Ensure tape is folded double, ends meet equally, and stitch entire perimeter of tape using size E thread staying 1/8 inch from edges and 1/2 inch from clip.

NOTE

Ensure dimensions of sewn tape meet minimum dimensions shown in Figure 7-19.

2. Position tape horizontally on flat surface with strap clip on left.

a. Measure and mark position on center line 2 1/4 inches from left end of tape and center punch a hole through the tape at the mark.

b. Using DOT Snapmaster and unidirectional punch and die set, install snap fastener button (MS27980-1B) and socket (MS27980-6B) with button on top.

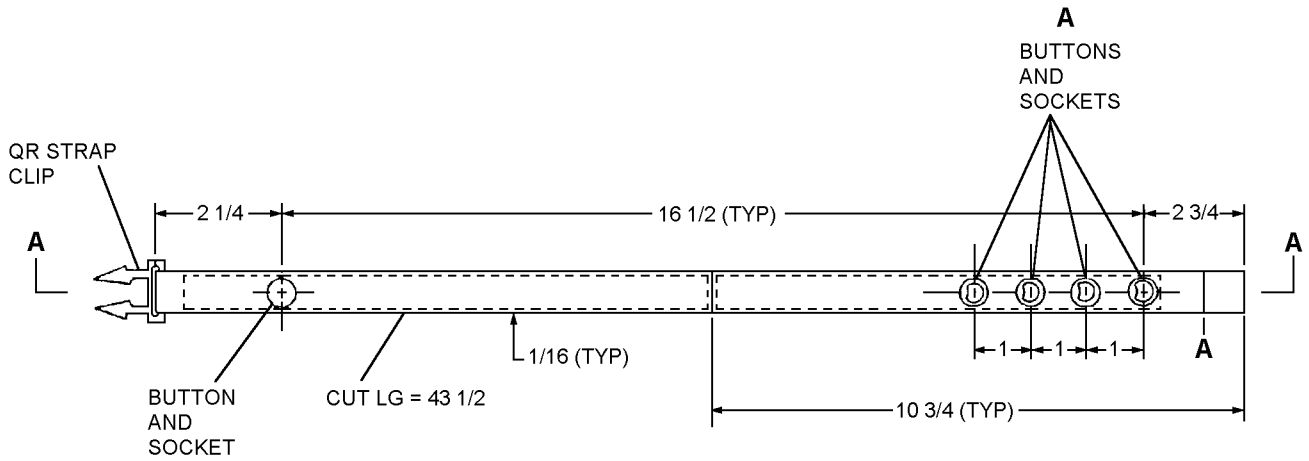

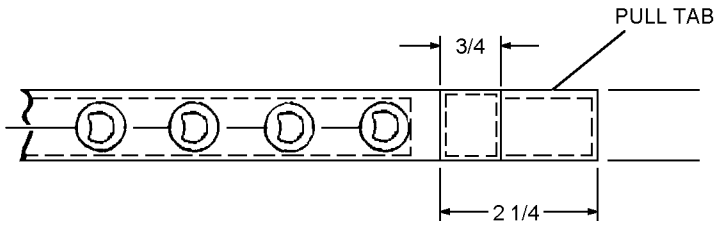

DETAIL A
DETAIL B

SECTION A-A

NOTE - ALL DIMENSIONS ARE IN INCHES.

7-19

Figure 7-19. Quick Disconnect Strap

3. Position tape horizontally on flat surface with strap clip on left and socket installed in step 2b facing up.

a. Measure and mark position on center line 2 3/4 inches from right end of tape. Measuring from this position, measure and mark three more positions at one inch intervals along the center line for a total of four positions. Center punch a hole through the tape at each of the four marked positions.

b. Using DOT Snapmaster and unidirectional punch and die set, install snap fastener buttons (MS27983-1) and sockets (MS27983-2) in each position. Each button shall be installed on top with directional dot pointing to the right.

NOTE

Each of the four buttons shall be on opposite side of tape from button installed in step 2b.

4. To fabricate pull tab, sear cut a 5-inch length of MIL-T-5038 1-inch tape.

a. Fold tape in half and sew ends together using size E thread.

NOTE

Do not sew tape halves together. Sew only ends together.

b. Overlap the right end of quick disconnect strap assembly 3/4 inch on stitched end of tape sewn in step 4a and box stitch using size E thread.

5. Repeat procedures in steps 1 through 4b for second quick disconnect strap.

7-79. FABRICATION/REPAIR OF BACK HARD ARMOR RETAINING STRAP (Figure 7-20). Fabricate/repair back hard armor retaining strap as follows:

Materials Required

Quantity	Description	Reference Number
As Required	Tape, Nylon, Type IV, 1-Inch, Sage Green	MIL-T-5038 NIIN 00-261-8579
As Required	Thread, Nylon, Size E, Sage Green	V-T-295 NIIN 00-204-3884

Materials Required (Cont)

Quantity	Description	Reference Number
1	Buckle 1-Inch, Black	MS51940-9S NIIN 00-878-8827
1	Fastener, Snap, Eyelet, Omni-directional	MS27980-8B NIIN 01-023-3843
1	Fastener, Snap, Stud, Omni-directional	MS27980-7B NIIN 00-842-1879
1	Buckle, Side Release, 1-Inch, Black (Female)	101-0100 (CAGE 82399)
1	DOT Snapmaster	89-M840 (CAGE 13940)
1	Punch and Die Set, Omni-directional	4403, 4404, 4304 (CAGE 13940)

1. Sear cut two 9 3/4-inch lengths of MIL-T-5038 1-inch tape.

a. Insert end of one tape through side release buckle, fold tape back 2 1/2 inches, and single stitch two tape layers together 1/2 inch from buckle.

b. Insert opposite end of tape through slide loop, fold back 3 1/4 inches, overlapping fold made in step 1a, and box stitch three tape layers together using size E thread staying 1/8 inch from edges of top layer tape and 3/8 inch from fold at slide loop end.

c. Lay strap assembly on flat surface with slide loop at left and folded side up. Measure and mark position on center line of tape 7/8 inch from fold at slide loop and center punch hole through strap assembly.

d. Install omnidirectional stud (MS27980-7B) and eyelet (MS27980-8B), with eyelet on bottom, using DOT Snapmaster and punch and die equipment.

e. Repeat steps 1a through 1d for second strap assembly.

BACK HARD ARMOR RETAINING STRAP

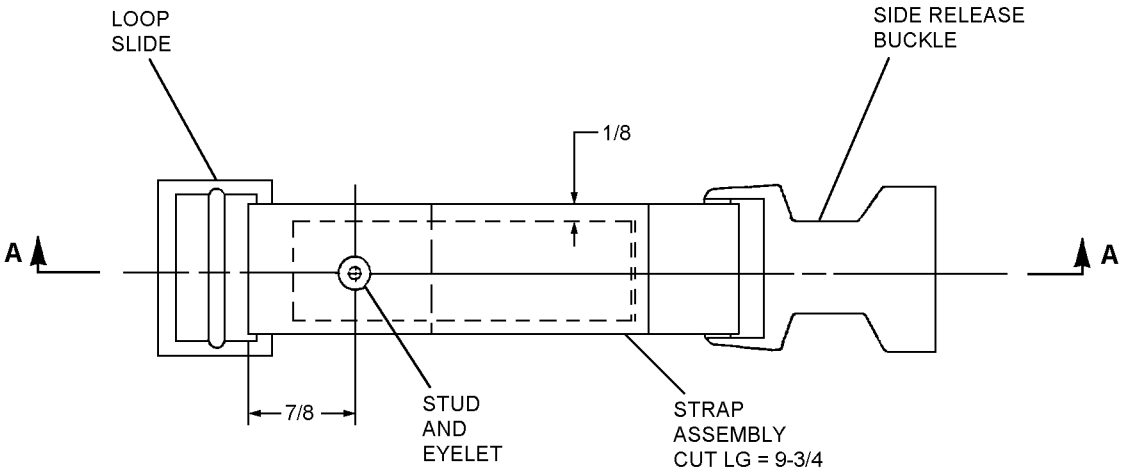

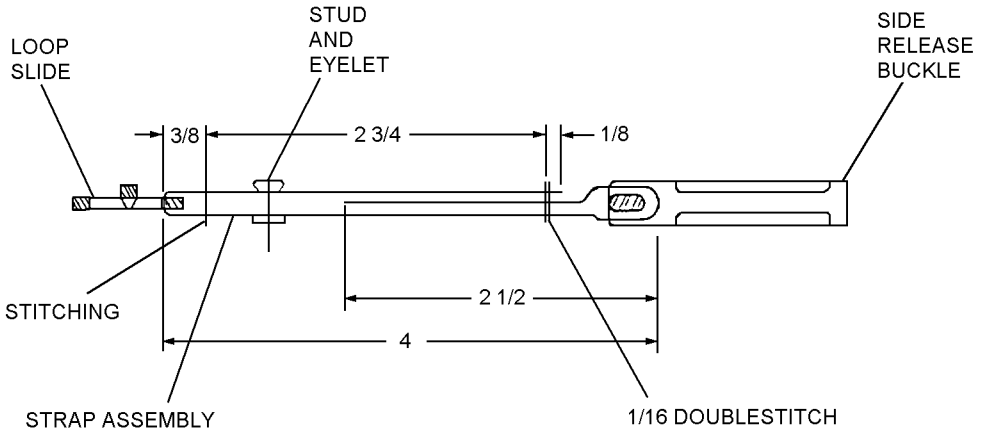

SECTION A-A

NOTE - ALL DIMENSIONS ARE IN INCHES.

7-20

Figure 7-20. Back Hard Armor Retaining Strap

7-80. STORAGE. The shelf life of the soft ballistic inserts and accompanying casing assembly will depend upon storage procedures and conditions. The soft ballistic inserts should be stored to prevent excessive exposure to ultraviolet rays. Such exposure will degrade the Helicopter Aircrew Survival and Armor Protective Assembly's protective capability. Service life is programmed for ten years, depending on the amount of usage and handling.

7-81. When properly stored and handled, the hard armor has an indeterminate life span. The hard armor should be carefully examined for cracks and/or dents prior to and after storage (see paragraph 7-69). Inspection results will determine whether armor is to be retained or replaced.

7-82. Ensure all stored PRU-61/P22P-15 or PRU-61A/P22P-15 small arms protective hard body armor units contain attaching assembly parts as follows: hard ballistic armor assemblies (front and back), armor beaded pull handle (1), quick disconnect straps (2) and back hard armor retaining straps (2).

THIS PAGE INTENTIONALLY LEFT BLANK.

CHAPTER 8

AUXILIARY PERSONAL EQUIPMENT

Section 8-1. Wrist Watch

8-1. GENERAL.

8-2. The wrist watch (GG-W-113) consists of a dull metal case housing a watch movement with a minimum of 15 jewels. The crystal is made of plastic and the band is black nylon. The watch is waterproof, shock and vibration resistant and anti-magnetic. A black dial has dividers marked in phosphorescent paint. The hands, including the sweep second hand are also painted with phosphorescent material. See Figure 8-1.

8-3. APPLICATION.

8-4. The wrist watch is used by aircrewmembers in combat zones and issued by direction of the cognizant Type Commander.

8-5. FUNCTION.

8-6. The watch has a stem-wound, spring-driven movement which will operate for approximately 36 hours on one full winding. For greatest accuracy, the watch should be fully wound near the same time each day. The hands are set by pulling the stem outward to a detent position and turning the stem forward or backward to adjust for the correct time. When the stem is outward position, the movement is locked and the second hand is stopped. When the stem is pressed in, the lock is released and the movement resumes operation.

8-7. MODIFICATIONS.

8-8. There are no modifications to the wrist watch required/authorized at this time.

8-9. MAINTENANCE.

WARNING

Phosphorescent material used in the dial is radioactive. If crystal is broken, avoid all contact with dial.

8-10. There are no formalized repair or servicing procedures for the wrist watch. The wrist watch may be serviced and regulated by a qualified watch repairman.

8-9

Figure 8-1. Aviator's Wrist Watch

Section 8-2. HGU-4/P Sun Glasses

8-11. GENERAL.

8-12. The HGU-4/P Sun Glasses (MIL-S-25948) consist of a metal frame, clear acetate nose pads and temple tips and high-quality ophthalmic crown glass lenses of neutral density. They are carried in a crush-resistant carrying case. See Figure 8-2.

WARNING

Aviator's sun glasses, are not shatterproof or breakproof, and do not provide an unbreakable shield against eye injury.

NOTE

Prescription sun glasses are available through local medical officer.

8-13. APPLICATION.

8-14. These glasses provide general purpose protection against sun glare. Sun glasses are issued to individual aircrewmen.

8-15. FITTING.

8-16. The sun glasses are fitted to the individual by adjusting the nose pads and temples to the individuals comfort.

8-17. MODIFICATIONS.

8-18. There are no modifications to the sun glasses required/authorized at this time.

8-19. MAINTENANCE.

8-20. CLEANING. The sun glasses are cleaned by steaming with breath and drying with a high quality lens tissue. The lenses may be washed with warm water if extremely dirty.

8-21. Protect the lenses from scratches and dirt by carrying in case when not in use.

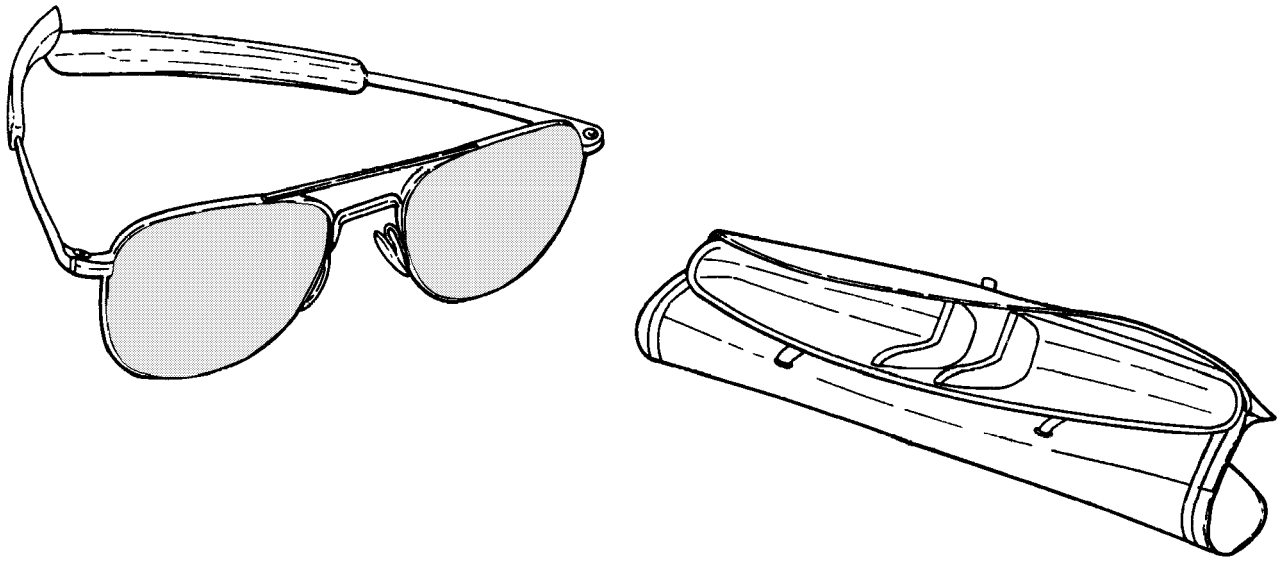

8-10

Figure 8-2. HGU-4/P Sun Glasses

Section 8-3. Darkness Adaptation Spectacles

8-22. GENERAL.

8-23. The Darkness Adaptation Spectacles (MIL-G-22112) consist of a plastic frame and shatter-resistant plastic lenses. The lens material is a slow burning cellulose acetate sheet having a dominant red hue. See Figure 8-3.

8-24. APPLICATION.

8-25. These spectacles provide dark adaptation for the aircrewmember prior to night operations. Darkness Adaptation Spectacles are issued to the aircrewmember.

8-26. FITTING.

8-27. The Darkness Adaptation Spectacles shall be worn a minimum time of 30 minutes prior to night flights. The flexible earpieces may be adjusted by gently forming with the fingers to provide a proper fit.

8-28. MODIFICATIONS.

8-29. There are no modifications to the Darkness Adaptation Spectacles required/authorized at this time.

8-30. MAINTENANCE.

8-31. CLEANING. Remove any dust and finger prints by washing with warm water or steaming with breath. Dry with clean, soft cloth or soft tissue. Do not use solvents or hot water.

8-32. Protect the lens from scratches and dirt by carrying in case when not in use.

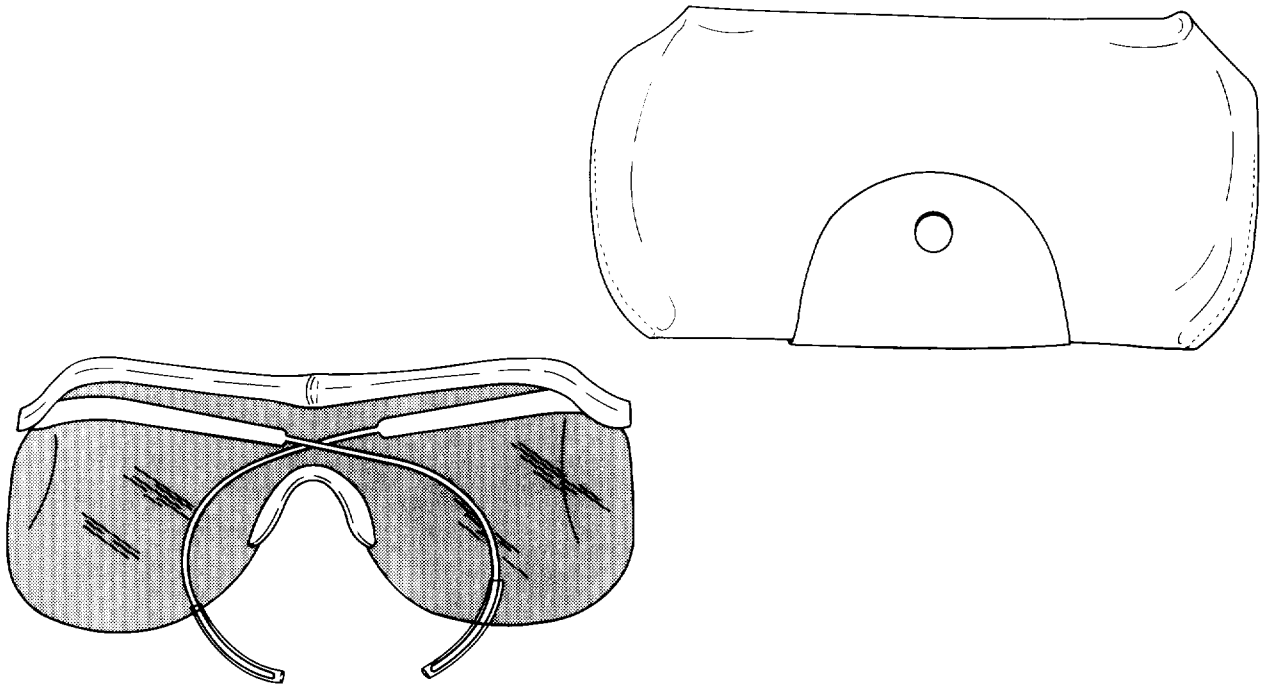

8-11

Figure 8-3. Darkness Adaptation Spectacles

Section 8-4. EDU-1/P Neodymium Laser Protective Spectacles

8-33. GENERAL.

WARNING

Neodymium Laser Protective Spectacles are not shatterproof or breakproof, and do not provide an unbreakable shield against eye injury.

NOTE

Prescription spectacles are available through local medical officer.

8-34. The EDU-1/P Neodymium Laser Protective Spectacles (MIL-S-85508(AS)) consist of a metal frame, clear acetate nose pads and temple tips, and lenses made from SCHOTT KG-3 optical glass or equivalent with a minimum optical density of 3.1. These spectacles protect against neodymium lasers and are not to be used as sunglasses. They are carried in a crush-resistant carrying case. See Figure 8-4.

8-35. APPLICATION.

WARNING

The EDU-1/P Neodymium Laser Protective Spectacles are not intended for maintenance personnel or personnel using optical devices such as binoculars or telescopes.

8-36. These spectacles are designed to protect aircrew members against possible harmful effects of neodymium laser energy at a wavelength of 1064 nanometers. They are to be used by aircrewmembers operating in the vicinity of any neodymium laser detection, ranging, or designating systems.

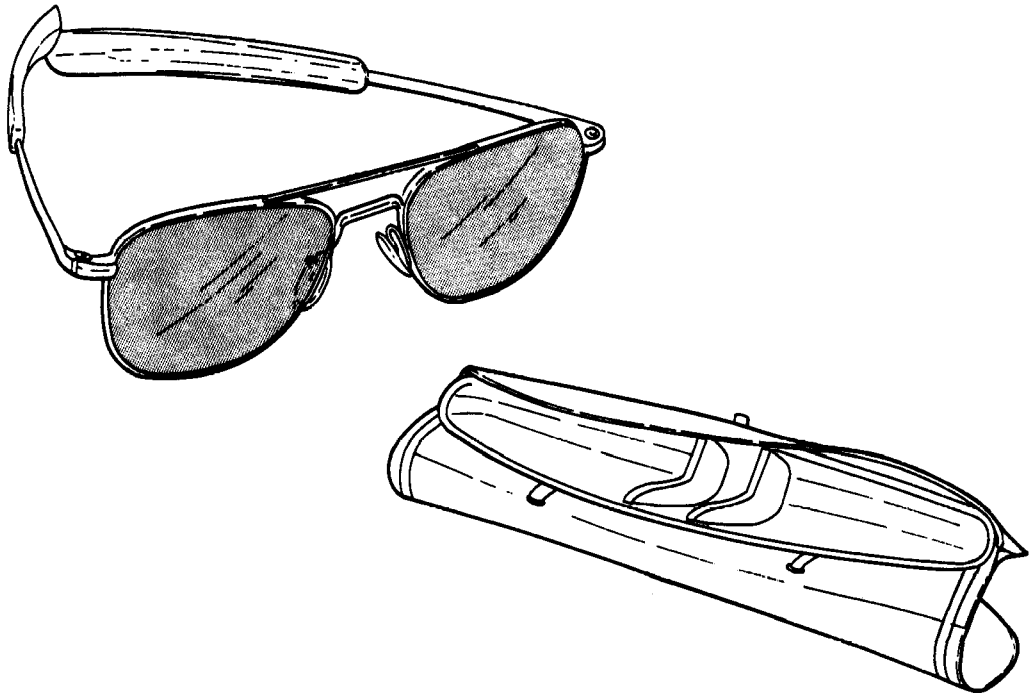

8-12

Figure 8-4. EDU-1/P Neodymium Laser Protective Spectacles

8-37. FITTING.

8-38. The spectacles are fitted to the individual by adjusting the nose pads and temples to the individual's comfort.

8-39. MODIFICATIONS.

8-40. There are no modifications to the spectacles required/authorized at this time.

8-41. MAINTENANCE.

8-42. INSPECTION. To inspect the EDU-1/P Neodymium Laser Protective Spectacles, proceed as follows:

CAUTION

If the spectacles are damaged do not use them. If scratched, lenses should not be reground as protection depends upon the thickness of the lens.

NOTE

The life expectancy of chrome electroplating of the frame is dependent on the type and duration of use. Wearers are advised that these frames should be replaced when the chrome electroplating erodes to the point when the underplating is exposed.

1. Check for scratches or damage to lenses.

2. Check frame for signs of erosion of chrome plating.

8-43. CLEANING. To clean the EDU-1/P Neodymium Laser Protective Spectacles, proceed as follows:

Materials Required

Quantity	Description	Reference Number
As Required	Cloth, Lint-Free	MIL-C-85043 NIIN 00-044-9281

CAUTION

Spectacles are fragile and can damage easily. Care should be used in handling to prevent scratching and breakage. Do not use abrasive cleaners or polish on lenses to remove scratches.

NOTE

In order to provide the desired protection, the spectacles must be cared for and used properly. When not being used, always keep the spectacles in their case.

1. Wash off all dust and dirt with warm water or steaming with breath.

2. Dry with a soft tissue or lint-free cloth.

Section 8-5. FV2 Laser Eye Protection Spectacles (LEPS)

8-44. GENERAL.

WARNING

FV2 Laser Eye Protection Spectacles are not shatterproof or breakproof and do not provide an unbreakable shield against eye injury.

8-45. The FV2 Laser Eye Protection Spectacles consist of a metal frame, clear acetate nose pads and temple tips, and lenses made from an absorptive broadband dye doped polycarbonate. They are not currently available in prescription lenses. They are carried in a crush-resistant carrying case. See Figure 8-5.

8-46. The FV2 spectacles are designed to protect the eye from the harmful effects of exposure to five discreet laser wavelengths. These include three common threat wave-lengths (lambda 1, 2, and 3), the Air Force's lambda 4A, and the Navy's 4N. The threat wavelengths and optical densities are classified SECRET, except for the lambda 3, Neodymium laser. The optical density for lambda 3 is a minimum of

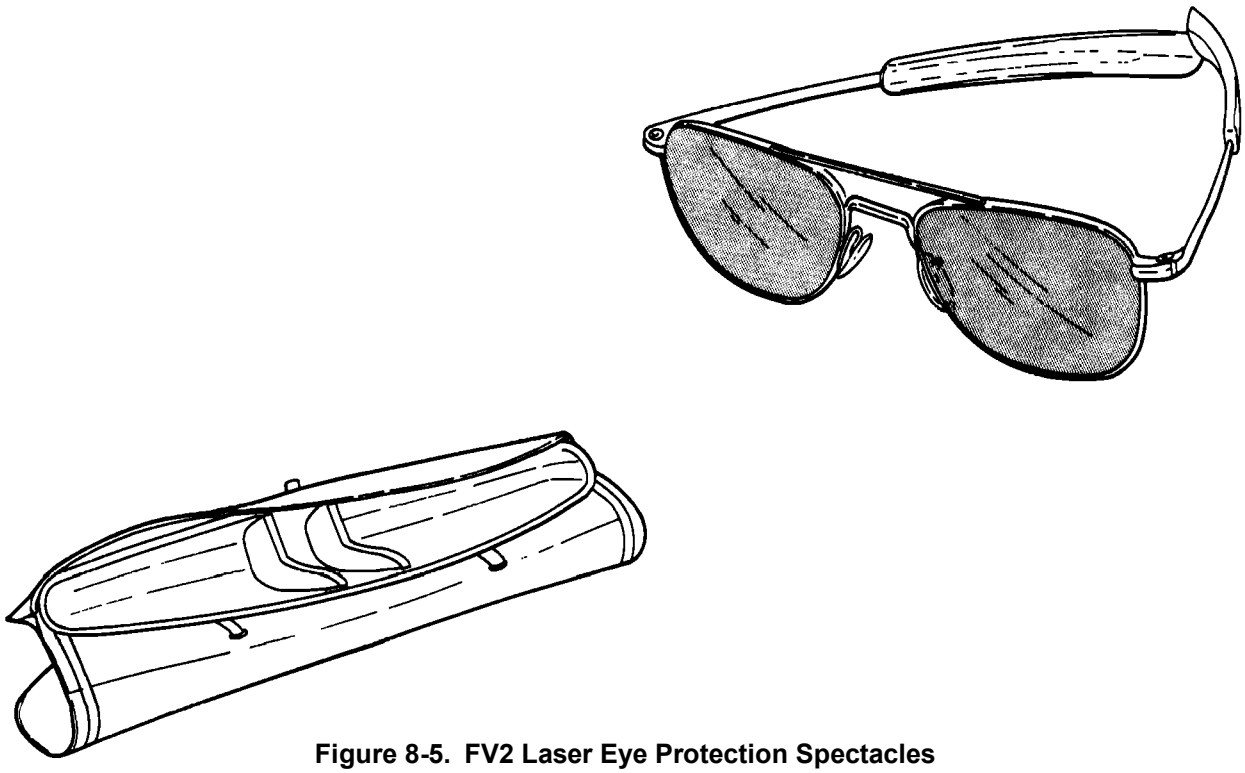

8-13

Figure 8-5. FV2 Laser Eye Protection Spectacles

four. Classified wavelength and optical density information can be obtained from:

Commanding Officer
Naval Air Systems Command
PMA-202E, 47123 Buse Road, Unit IPT
Patuxent River, MD 20670-1547

The FV2 Laser Eye Protection Spectacles should be a controlled item requiring special handling.

8-47. The spectacles reduce the available light to approximately 12% during the day (comparable to sun glasses), and allow only 2.5% of available light to reach the eye during the night. The reduction of available light and color distortion is significant. Items viewed through the spectacles will appear to be brownish-orange; there is no perception of blue or red and only minimal perception of green and yellow.

8-48. APPLICATION.

WARNING

The FV2 Laser Eye Protection Spectacles are not intended for maintenance personnel or personnel using optical devices such as binoculars or telescopes. The Spectacles shall be worn only during full daylight hours, as they do not transmit enough light during the hours of dawn, dusk, or at night.

WARNING

The FV2 spectacles are physically compatible with night vision goggles, however they can degrade the intensified scene by as much as 89%, depending on the ambient light level and scene contrast. They are also physically compatible with heads up and heads down displays, but may degrade the visibility of the displays under certain conditions.

CAUTION

The FV2 spectacles are not compatible with the helicopter CBR Protective Assembly (A/P22P-9(V)). The spectacle frames may scratch the mask faceplate due to the tight fit.

8-49. These spectacles are intended for use by all fixed- and rotary-wing aircrewmembers subject to potential laser exposure while operating in the vicinity of laser detection, ranging, or designating systems.

8-50. FITTING.

8-51. The spectacles are available in standard sizes of 52 mm and 58 mm and are fitted to the individual by adjusting the nose pads and temples to the individual's comfort.

8-52. MODIFICATIONS.

8-53. There are no modifications to the spectacles required or authorized at this time.

8-54. MAINTENANCE.

CAUTION

Spectacles are fragile and can be damaged easily. Care should be used in handling to prevent scratching and breakage. When not being used, always keep the spectacles in their case.

A lens is considered damaged and not to be used if a scratch is detected that exceeds one third the thickness of the lens. A lens can continue to be used if a scratch of lesser depth is detected and is not in the critical vision area or reported as bothersome by the aircrewmember. Damaged lenses should be disposed of in accordance with paragraph 8-57.

NOTE

If the frames are damaged, there is no authorization to procure frames from supply. Retain maintenance significant spare parts for repair.

8-55. INSPECTION. To inspect the FV2 Laser Eye Protection Spectacles, proceed as follows:

1. Check for scratches or damage to lenses.
2. Check frame for signs of damage.

8-56. CLEANING. To clean the FV2 Laser Eye Protection Spectacles, proceed as follows:

Materials Required

Quantity	Description	Reference Number
As Required	Cloth, Lint-Free	MIL-C-85043 NIIN 00-044-9281
As Required	Tissue, Facial	Commercial
As Required	Compound, Anti-fogging	OA549 NIIN 00-754-2672

CAUTION

Do not use abrasive cleaners or polish on lenses to remove scratches.

1. Lightly wipe all dust and dirt from the lenses using a clean, soft, lint-free cloth.

2. Clean lenses with a moistened cloth or apply moisture by breathing on the lenses and wiping with a clean, soft, lint-free cloth.

3. Dry spectacles with a fresh, soft, facial tissue or clean, soft, lint-free cloth.

4. (Optional) Apply Anti-fogging compound to spectacle lenses.

8-57. DISPOSAL.

8-58. The FV2 lenses are controlled items and should be sent to the cognizant TYCOMS for disposal. The lenses shall be crushed for final disposal and discarded.

Section 8-6. EDU-5/P Laser Eye Protection Spectacles

8-59. GENERAL.

WARNING

EDU-5/P spectacles are not shatterproof or breakproof and do not provide an unbreakable shield against eye injury.

NOTE

Upon issue, the EDU-5/P spectacles shall be installed in the aircrewmember's survival vest and remain in place until the aircrewmember detaches/transfers from the command.

EDU-5/P spectacles will not be replenished due to manufacturing issues. Once stocked EDU-5/P assets are exhausted, there will be no further supply support. Activities that are not deployed are advised to turn in all EDU-5/P spectacles assets to the NAVAIR ISS Warehouse:

UIC N48535
NAVAIR ISS Facility
Building 612 Bay, 12 MCAS Beaufort
Beaufort, SC, 29904-5002
ATTENTION: ALSS/Special Projects
Comm: 843-522-3900

Returned EDU-5/P's will be reissued to the next forward deployed activity. Activities deploying shall request initial outfitting from CNAF ALSS Class Desk.

8-60. The EDU-5/P spectacles, Figure 8-6, are designed to protect the eyes of the wearer from the harmful effects of multiple, discrete, laser-threat wavelengths. Protection is provided by lenses comprised of holographic and dielectric filters laminated between a polycarbonate cap and dye base. Prescription lenses are not available. Attachable sun inserts are provided for use in bright sun conditions when desired. The spectacles are physically compatible with night vision goggles, heads-up displays, and cockpit lighting. The spectacles reduce the amount of light reaching the eye, but are designed to be used during day and night missions. The EDU-5/P spectacles replace the FV-2 laser eye protection spectacles. To protect the spectacles and sun inserts from damage, they should be kept in the protective case when not in use. To prevent scratching, do not lay spectacles, lens down, on any hard surface.

WARNING

The EDU-5/P is not authorized for use during take-off or landing.

CAUTION

The EDU-5/P provides protection against visible and invisible laser threats. As such, they will degrade visibility more than infrared-only protection devices. During daylight operations, under particular glare conditions, portions of the cockpit displays may be difficult to read or may require greater head movement or dwell time. During night aided operations with the spectacles, increasing the brightness on cockpit displays may be required for readability.

NOTE

Operations with the EDU-5/P shall be conducted during daylight flight prior to night (aided) flight and shall be conducted at high altitude prior to any low altitude maneuvers. First time users of these specified LEP devices shall accomplish a crew station visibility assessment, in day and night NVG aided modes, prior to flight.

8-61. CONFIGURATION.

8-62. The EDU-5/P spectacles consist of a frame assembly and left and right lenses. Included with the EDU-5/P spectacles assembly are the sun insert and a two-compartment crush-resistant protective carrying case. The EDU-5/P spectacles come in ten sizes with the lens diameter standardized at 52 mm. There are five EDU-5/P frame sizes. Sun insert sizes match the five EDU-5/P frame sizes. There are three lens types (A, B, and C), each with an optically different direct look point. The direct look points are not visibly identifiable. Lens types are etched in the upper edge of each lens with the serial number. The location of the direct look points can be found by using the EDU-5/P fitting template set.

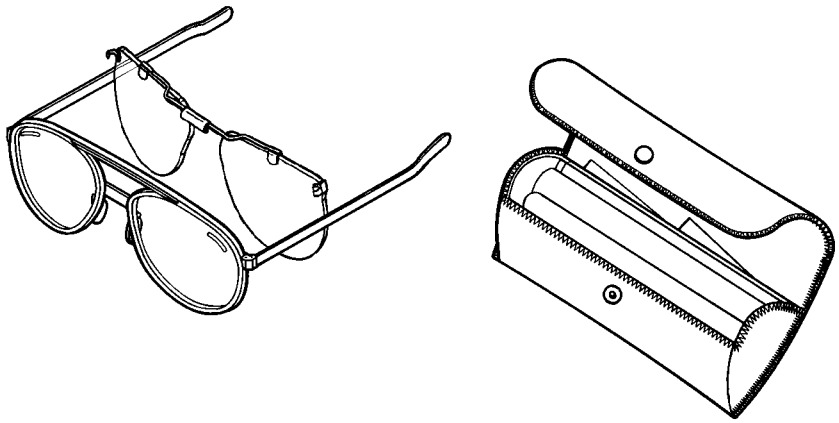

8-14

Figure 8-6. EDU-5/P Laser Eye Protection Spectacles

8-63. SUPPORT EQUIPMENT.

8-64. The EDU-5/P fitting template set is required to properly fit all aircrew members. The fitting template set consists of a box containing three pairs of color-coded template lenses which attach to the spectacles for fitting. Type A is red; type B is orange; and type C is yellow. These three types correspond to the A, B, and C type markings on each EDU-5/P lens. The EDU-5/P fitting spectacles set may be used with the fitting template set to determine the correct size spectacles for each aircrewmember. The fitting spectacles set consists of a box with five frame sizes, each with clear lenses. Fitting spectacles allow fitting and sizing to be determined when actual EDU-5/P spectacles are not available. Use of fitting templates either with actual EDU-5/P spectacles or the fitting spectacles allow the correct size to be determined prior to ordering EDU-5/P spectacles.

8-65. APPLICATION.

NOTE

EDU-5/P spectacles are not intended for use by maintenance personnel. The spectacles are not compatible with the Chemical, Biological, Radiological (CBR) hood assembly.

8-66. The EDU-5/P spectacles are intended for use, day and night, by all fixed-wing and rotarywing aircrewmembers while operating in a laser threat environment. Sun inserts, which clip behind the spectacles, are only for use in very bright sun conditions, in addition to the clear visor. The neutral gray helmet visor is not recommended because the combination is very dark, but may be used if desired. The EDU-5/P frame design allows compatibility with night vision goggles. The spectacles are not compatible with the CBR hood assembly due to comfort issues.

8-67. FITTING.

NOTE

Proper fit of the EDU-5/P Spectacles is critical to achieve the designed level of laser protection. An inter-pupilary distance (IPD) measurement shall be performed by a qualified Flight Surgeon, Optometrist, or other qualified medical personnel. For accurate measurement, a Pupilometer shall be used.

Materials Required

Quantity	Description	Reference Number
1	EDU-5/P Spectacles, (size IAW Table 8-1)	(See IPB Para 8-85)
1	EDU-5/P Fitting Template Set	NIIN 01-466-4507
1	EDU-5/P Fitting Spectacles Set	2006997 (CAGE 4W129)
1	Projector, Overhead	—
1	Screen, Projection	—
1	Pliers, Needle Nose	—

1. Determine the EDU-5/P size required using the EDU-5/P size chart, Table 8-1.

Table 8-1. EDU-5/P Size Chart

IPD Size Range	EDU-5/P Size	Frame Size	Fitting Template Type	Template Tint
53-55 mm	52-14A	52-14	A	Red
56-58 mm	52-14B	52-14	B	Orange
58-60 mm	52-16B	52-16	B	Orange
60-62 mm	52-18B	52-18	B	Orange
62-64 mm	52-20B	52-20	B	Orange
63-65 mm	52-14C	52-14	C	Yellow
64-66 mm	52-22B	52-22	B	Orange
65-67 mm	52-16C	52-16	C	Yellow
67-69 mm	52-18C	52-18	C	Yellow
69-71 mm	52-20C	52-20	C	Yellow

NOTE

Where there is an overlap of IPD size, aircrewmembers with wider head sizes will, generally fit better in the larger frame size. Use of frames with clear lenses from the EDU-5/P fitting spectacles set for step 3 will verify the correct size prior to ordering EDU-5/P spectacles.

Fitting of EDU-5/P spectacles is only authorized to be performed by trained and designated Aircrew Survival Equipmentmen (PR). Training shall be provided by Fleet Air Introduction Liaison Survival Aircrew Flight Equipment (FAILSAFE), Aeromedical Safety Officer (AMSO), or Aeromedical Safety Corpsman (AMSC).

2. Using the aviator's NATOPS Training Jacket, record the interpupillary distance (IPD) measurement and the EDU-5/P size into the aviator's Aircrew Systems Record, OPNAV 4790/138 (Figure 8-8).

CAUTION

If proper fit is not assured, refer to a qualified AMSO, Flight Surgeon, Optometrist, or other qualified medical personnel. Proper fit is required to locate the direct look point of each lens over the pupils of the individual in order to achieve the designed laser protection.

3. Verify that spacing of the direct look points matches the aircrewmember's IPD.

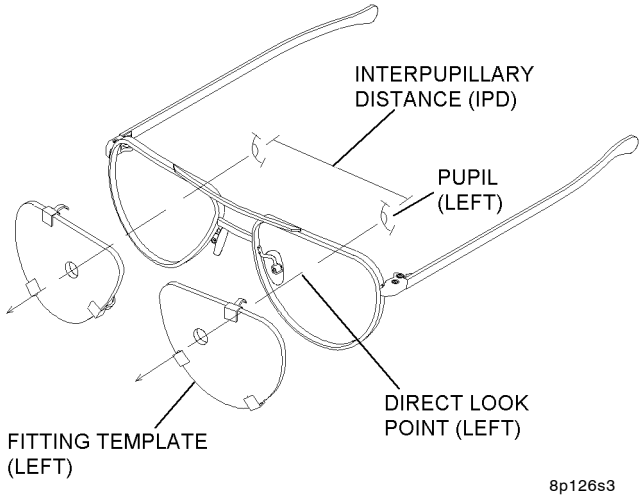

Step 3 - Para 8-67

a. Using the index finger and thumb, hold the top and bottom clips on the fitting template. Slide the template into place over the corresponding lens as shown, with the top and side clips above and below the hinge. Rotate the template to align the bridge alignment mark with the bridge. Proper attachment occurs when all three clips are seated firmly, the template's bridge mark lines up with the bridge, and the top of the template sits firmly against the brow bar.

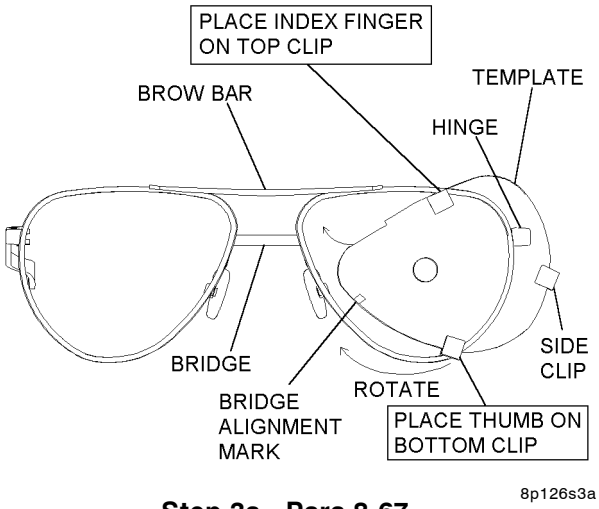

Step 3a - Para 8-67

b. Aim an overhead projector or other light source at a bulkhead approximately six feet away.

c. Stand the aircrewmember approximately 1 to 2 feet from the light source, facing perpendicular (90°) to the light source.

d. Turn the light source on and direct the light at the aircrewmember's head.

e. Place the spectacles on the aircrewmember.

f. Turn off all other light sources in the room.

g. Stand approximately two feet in front of the aircrewmember in a position to see the pupil closest to the light source.

h. Turn the aircrewmember slightly so that you can see the pupil closest to the light source through the hole in the template.

i. Instruct the aircrewmember to look straight ahead and level at a distant object (i.e. infinity).

CAUTION

Pupils must be centered in the holes on the fitting template without any adjustment to the front section of the frames. Nose pad and temple arms may be adjusted as necessary for correct position of the fitting template and for comfort.

j. Observe that the pupil closest to the light source is centered side-to-side on the hole in the fitting template.

k. If the fitting template does not line up correctly, use another size spectacles or refer to an AMSO.

l. Turn the aircrewmember to face the opposite direction and repeat steps g through k.

4. Complete the fitting adjustment with flight equipment.

a. Instruct aircrewmember to don helmet and oxygen mask as normally worn during an operational flight, with the visor raised.

b. Stand the aircrewmember approximately 1 to 2 feet from the light source, facing perpendicular (90°) to the light source.

c. Place the spectacles on the aircrewmember.

d. Stand approximately two feet in front of the aircrewmember in a position to see the pupil closest to the light source.

e. Turn the aircrewmember slightly so that you can see the pupil closest to the projector through the hole in the template.

f. Instruct the aircrewmember to look straight ahead and level at a distant object.

g. If the fitting template does not line up, remove the spectacles from the aircrewmember. Raise or lower the spectacles to center the hole in the fitting template directly over the individual's pupil.

h. Use needle-nose pliers to carefully adjust the nose pads in (up) or out (down) to adjust the height of the spectacles. Remove and replace spectacles on aircrewmember as required during adjustment.

i. Instruct aircrewmember to turn from side to side as necessary to adjust the height of the entire EDU-5/P.

j. Height adjustment is complete when the holes in the fitting template are centered directly over the aircrewmember's pupils.

5. Verify compatibility with the visor.

a. Adjust room lighting to normal.

b. Without removing the spectacles, remove the fitting template from the spectacles by rotating and sliding the template off to the side.

c. Lower the visor and attach the oxygen mask if normally worn. Ensure spectacles are not in contact with the visor.

CAUTION

The frame assembly is designed to fit very closely to the face. Do not bend the frame or some laser protection will be lost.

d. Raise the visor. Remove the spectacles. As required, use needle-nose pliers, to carefully adjust the temple arms for best fit. Best fit will result in the spectacles being secure in the proper position on the head without excessive looseness, excessive tightness, or "hot spots."

e. Remove spectacles and re-attach the matching fitting template.

f. Use the light source and "fitting adjustment with flight equipment" procedures above (steps 4a thru 4j) to double-check that the holes in the fitting template are centered directly over each pupil. Re-adjust if necessary.

6. Verify sun insert fit.

a. Remove spectacles and remove the fitting template from the spectacles.

b. Attach the sun insert to the spectacles, ensuring a secure fit.

c. Place the spectacles with sun insert on the aircrewmember.

d. Ensure that the sun insert does not press on the aircrewmember's face or oxygen mask. If pressure is felt, readjust the nose pads slightly.

e. Remove spectacles and sun insert.

7. Clean lenses and sun insert in accordance with paragraph 8-81.

8. Place spectacles and sun insert in protective case and secure in the aircrewmember's survival vest in accordance with paragraph 8-80.

9. Record spectacles information on Aircrew Systems Record, OPNAV 4790/138, (Figure 8-8) and in accordance with COMNAVAIRFORINST 4790.2.

NOTE

The EDU-5/P spectacles are controlled items. The spectacles shall be secured and maintained in a carrying case for storage. Aircrewmembers shall return spectacles to the O-level Aviator's Equipment Branch upon detachment from a squadron/unit requiring EDU-5/P spectacles.

8-68. REFERENCE NUMBERS, ITEMS, AND SUPPLY DATA.

8-69. Refer to the EDU-5/P Illustrated Parts Breakdown for reference numbers, items, and supply data.

8-70. MODIFICATIONS.

8-71. There are no modifications authorized on the EDU-5/P spectacles.

8-72. MAINTENANCE.

8-73. All EDU-5/P maintenance actions shall be performed by a qualified PR. The following two subcomponents of the EDU-5/P spectacles assembly are supported for replacement: EDU-5/P Frame Assembly; EDU-5/P Sun Insert Assembly.

CAUTION

The EDU-5/P spectacles shall be stored in their protective carrying case when not in use. All necessary precautions shall be taken to avoid scratching the lenses and/or bending the frames. If frames are bent, fitting must be verified to ensure optimum laser protection.

NOTE

Unserviceable lens(es) require replacement of the complete EDU-5/P spectacles assembly. If one or both lenses are unserviceable, return the complete EDU-5/P spectacles in their protective case in accordance with paragraph 8-83.

8-74. INSPECTION.

8-75. The EDU-5/P spectacles assembly shall be inspected upon issue and at intervals to coincide with the survival vest in which the spectacles are stored.

CAUTION

If aircraft instrument readability appears to deteriorate in flight, a fitting check is recommended after flight. A shift in fit may result in dimming of the gages and less than optimum laser protection.

8-76. EDU-5/P Inspection procedures are as follows:

1. Check lenses for scratches, delamination, or other damage, security, and cleanliness. Scratches do not reduce laser protection. Severe scratches or other damage in the pupil area may be distracting to the

point that the wearer may determine that the lens is unserviceable.

2. Check lenses for stress fractures internal to each lens. Fractures are most likely to occur near the hinges. Stress fractures extending 1/4 inch in from the edge are not considered a defect.

3. Check frame for signs of damage and loose or missing screws.

4. Check sun insert for scratches, signs of damage, and security of clips.

5. Check spectacles and sun insert for fit to ensure all frame components have retained proper position.

6. Check protective case for condition.

7. If discrepancies are found, clean or refer to a qualified PR to adjust, repair, or replace spectacles, components, sun insert, or protective case prior to flight.

8. Clean spectacles and sun insert, if required, in accordance with paragraph 8-81.

9. Document in accordance with COMNAVAIRFORINST 4790.2.

8-77. FRAME REPLACEMENT. EDU-5/P frame replacement consists of removing the lenses from the old frame and placing the lenses in the new frame assembly.

8-78. Lens Removal. (Figure 8-7).

Materials Required

Quantity	Description	Reference Number
1	Screwdriver Set, Jeweler's, Swivel	NIIN 00-288-8739
1	Cloth, Lint-Free, Type II	MIL-C-85043

WARNING

Place the hinge area of the spectacles on a table edge for support when using the jeweler's screwdriver to loosen or tighten screws.

1. Place the hinge area of the spectacles on a table edge.

2. Using a straight-slot jeweler's screwdriver, size 1.8mm (0.070 in.), loosen the closing block screw slightly (Figure 8-7). Use firm pressure to avoid stripping screw head.

3. Hold the spectacles over a soft "catch cloth" and continue unscrewing the closing block screw until the side of the frame springs apart. The screw may be left in the closing block.

4. Remove the lens from the frame.

8-79. Lens Installation.

CAUTION

When installing lenses, ensure that the correct lens type is used. Do not mix A, B, or C lens types in a single frame. The diameters of all lenses are the same, and are physically able to fit in all frames. However, the direct look points of lenses are very different. Using the wrong lenses will significantly reduce laser protection.

Materials Required

Quantity	Description	Reference Number
As Required	Alcohol, Isopropyl	TT-I-735 NIIN 00-655-8366
As Required	Coating, RTV	MIL-A-46146 NIIN 01-157-9469
1	Screwdriver Set, Jeweler's, Swivel	5120-00-288-8739
2	Cloth, Lint-Free, Type II	MIL-C-85043

WARNING

Place the hinge area of the frame on a table edge for support when using the jeweler's screwdriver to loosen or tighten screws. Do not mix A, B, or C lens types in a single frame.

1. Peel residual RTV coating from outside edges of the lenses.

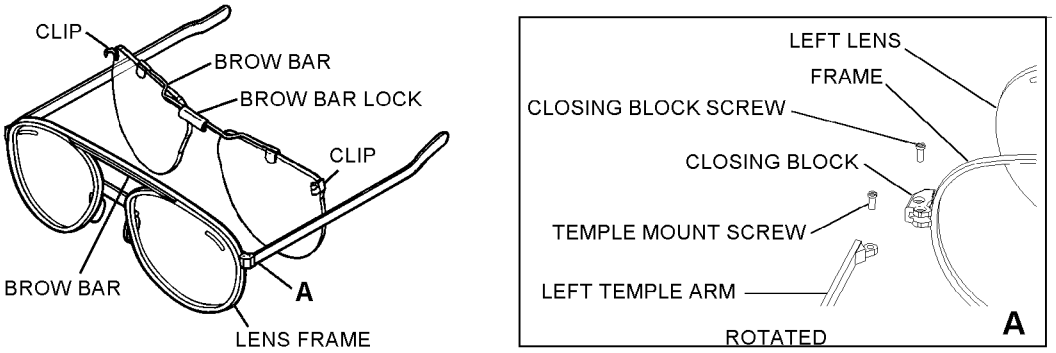

8-15

Figure 8-7. EDU-5/P Parts Identification

2. Place one of the hinge areas of the frame on a table edge.

3. Using a straight-slot jeweler's screwdriver, size 1.8mm (0.070 in.), loosen the closing block screw (Figure 8-7). Use firm pressure to avoid stripping, the screw head. The screw may be left in the closing block.

4. Repeat steps 2 and 3 for the other side of the frame.

NOTE

If a cured plug has formed in the RTV applicator tip remove the plug with a paperclip.

5. Using the applicator tip supplied with the RTV coating, carefully apply a very thin bead of RTV coating to the inside grooves of the frame where the lenses will be seated.

6. Allow the RTV to cure for one hour.

7. Using care not to scratch the lens, place one lens in the frame, nasal side first, and carefully squeeze the frame around the lens. Ensure that the free section of the frame is positioned in the closing block.

8. While holding the frame and lens in position, use a straight-slot jewelers screwdriver, size 1.8mm (0.070 in.) to tighten the closing block screw a few turns to stabilize the screw.

9. Place hinge area of the spectacles on a table edge for final tightening.

10. Tighten the screw snugly. Do not over-tighten or threads may strip. The screw head should be flush or slightly recessed. The opposite end of the screw should protrude slightly through the closing block.

11. Repeat steps 7 through 10 for the second lens.

12. Using isopropyl alcohol and a clean, lint-free cloth, clean the frame and lenses to remove excess RTV coating.

13. Fit spectacles to aircrewmember in accordance with paragraph 8-67 steps 3 through 5.

14. Clean lenses in accordance with paragraph 8-81.

15. Record spectacles information on Aircrew Systems Record, OPNAV 4790/138, (Figure 8-8) and in accordance with COMNAVAIRFORINST 4790.2.

8-80. INSTALLATION OF RETENTION LANYARD. To install the EDU-5/P retention lanyard, proceed as follows:

Materials Required

Quantity	Description	Reference Number
1	Drill	—
1	Bit, Drill, 5/32-inch	—
As Required	Cord, Fibrous, Type IA	MIL-C-5040 NIIN 00-240-2154

1. Remove spectacles from their protective case.

AIRCREW SYSTEMS RECORD	A1. TYPE ASSEMBLY	A2. SERIAL NUMBER	A3. PART NUMBER	A4. FSCM	A5. CONTRACT NUMBER
	EDU-5/P	0100/0101	2005207-1/-2	4W129	N/A

SERVICE LIFE ITEMS

B1. NOMENCLATURE	B2. PART NUMBER	B3. CONTRACT NUMBER/LOT NO	B4. DODIC	B5. SERIAL	B6. QTY	B7. MFG DATE	B8. INSTL DATE	B9. EXPIRE DATE
EDU-5/P SPECTACLES 52-20B	2006572-505		N/A	N/A	1	N/A	8MAR01	N/A
LEFT LENS (TYPE B)	2005207-2		N/A	0100	1	N/A	8MAR01	N/A
RIGHT LENS (TYPE B)	2005207-1		N/A	0101	1	N/A	8MAR01	N/A
EDU-5/P FRAME ASSY 52-20	2003968-4		N/A	N/A	1	N/A	8MAR01	N/A
CASE, PROTECTIVE	2005270-501		N/A	N/A	1	N/A	8MAR01	N/A
EDU-5/P SUN INSERT 52-20	2005732-104		N/A	N/A	1	N/A	8MAR01	N/A

TECHNICAL DIRECTIVES

C1. TYPE	C2. NUMBER	C3. REV	C4. AM	C5. QA	C6. ORG	C7. DATE	C8. STATUS	C1. TYPE	C2. NUMBER	C3. REV	C4. AM	C5. QA	C6. ORG	C7. DATE	C8. STATUS	C1. TYPE	C2. NUMBER	C3. REV	C4. AM	C5. QA	C6. ORG	C7. DATE	C8. STATUS

LOCAL USE

Interpupillary Distance (IPD) 63 mm

Figure 8-8. Example Aircrew Systems Record (OPNAV 4790/138)

2. Drill a 5/32-inch hole in the back left corner of the protective case in the location shown.

3. Using a 48-inch length of Type IA nylon cord (MIL-C-5040) seared at both ends, thread cord though the 5/32-inch hole in the case and secure to case with a bowline knot followed by an overhand knot.

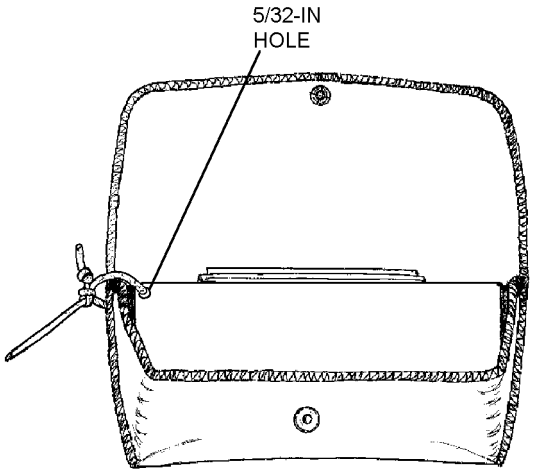

8p139s2

Steps 2 and 3 - Para 8-80

4. Secure the opposite end by tying a bowline knot followed by an overhand knot in the applicable survival vest.

8-81. CLEANING. To clean the EDU-5/P Laser Eye Protection Spectacles, proceed as follows:

Materials Required

Quantity	Description	Reference Number
As Required	Solution, Optical Cleaning	MIL-C-43454 NIIN 00-188-9875
	-or-	
As Required	Alcohol, Isopropyl	TT-I-735 NIIN 00-655-8366
As Required	Solution, Anti-fogging	NIIN 00-754-2672
As Required	Cloth, Lint-Free, Type II	MIL-C-85043 NIIN 00-044-9281
	-or-	
As Required	Tissue, Facial	—

CAUTION

Do not use abrasive cleaners, ammonia-based cleaners, polish or solvents to clean lenses or frame.

1. Lightly wipe all dust and dirt from the lenses and frame using a clean, soft, lint-free cloth or a fresh, soft, facial tissue.

NOTE

Isopropyl alcohol shall only be used for removing RTV, not for standard cleaning.

2. Apply optical cleaning compound, water, or isopropyl alcohol to the lenses with a spray or lint-free cloth.

3. Wipe lenses with a clean, soft, lint-free cloth.

4. Dry lenses with a dry, clean, soft, lint-free cloth or a fresh, soft, facial tissue. Avoid excess wiping of dry lenses.

5. (Optional) Apply anti-fogging solution to lenses.

6. Place spectacles with sun insert in protective case and store in a secure area.

8-82. DISPOSAL.

8-83. To dispose of unserviceable EDU-5/P lenses, proceed as follows:

1. If one or both lenses in a pair of spectacles is unserviceable, the complete EDU-5/P spectacles shall be disposed of in accordance with these procedures.

2. If unserviceable lens is in multiple pieces, place recoverable pieces in a plastic bag in the protective case with the frame and serviceable lens.

3. If the frame associated with a damaged lens is damaged to the point that it will not fit in the protective case, box the lenses, frame, and case.

4. Damaged lenses shall be returned via traceable means with their frame, protective case and Aircrew Systems Record (OPNAV 4790/138) to Commander, Naval Air Warfare Center, Aircraft Division, Vision Laboratory, Code 4.6.7, Bldg. 2187, Room 1A50, Unit 5, 48110 Shaw Road, Patuxent River, MD 20670-1906.

8-84. To dispose of an unserviceable frame or sun insert, proceed as follows:

1. Remove serviceable lenses from the damaged frame in accordance with paragraph 8-78.

2. Discard unserviceable frame.

3. Return unserviceable sun insert to the Naval Air Warfare Center Vision Laboratory in the same manner as paragraph 8-83.

4. Document in accordance with COMNAVAIRFORINST 4790.2.

8-85. ILLUSTRATED PARTS BREAKDOWN.

8-86. This section lists and illustrates the assemblies and detailed parts of the EDU-5/P Laser Eye Protection Spectacles. The Illustrated Parts Breakdown (Figure 8-9) should be used during maintenance when requisitioning and identifying parts.

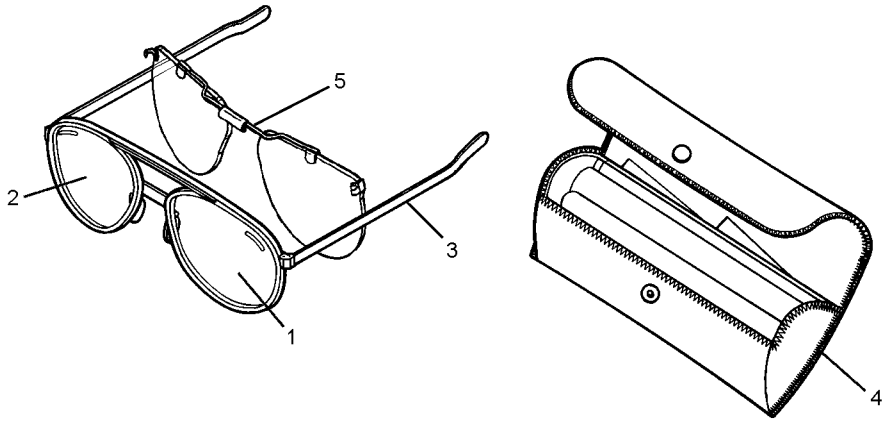

8-17

Figure 8-9. EDU-5/P Laser Eye Protection Spectacles

Figure and Index Number	Part Number	Description 1 2 3 4 5 6 7	Units Per Assembly	Usable On Code
8-9	2006572-501	EDU-5/P Laser Eye Protection Spectacles, 52-14A	1	A
	2006572-502	EDU-5/P Laser Eye Protection Spectacles, 52-14B	1	B
	2006572-503	EDU-5/P Laser Eye Protection Spectacles, 52-16B	1	C
	2006572-504	EDU-5/P Laser Eye Protection Spectacles, 52-18B	1	D
	2006572-505	EDU-5/P Laser Eye Protection Spectacles, 52-20B	1	E
	2006572-506	EDU-5/P Laser Eye Protection Spectacles, 52-22B	1	F
	2006572-507	EDU-5/P Laser Eye Protection Spectacles, 52-14C	1	G
	2006572-508	EDU-5/P Laser Eye Protection Spectacles, 52-16C	1	H
	2006572-509	EDU-5/P Laser Eye Protection Spectacles, 52-18C	1	I
	2006572-510	EDU-5/P Laser Eye Protection Spectacles, 52-20C	1	J
-1	2005206-2	. EDU-5/P Lens, Left, Type A	1	A
	2005207-2	. EDU-5/P Lens, Left, Type B	1	B,C,D,E,F
	2005208-2	. EDU-5/P Lens, Left, Type C	1	G,H,I,J
-2	2005206-1	. EDU-5/P Lens, Right, Type A	1	A
	2005207-1	. EDU-5/P Lens, Right, Type B	1	B,C,D,E,F
	2005208-1	. EDU-5/P Lens, Right, Type C	1	G,H,I,J
-3	2003968-1	. EDU-5/P Frame, 52-14	1	A,B,G
	2003968-2	. EDU-5/P Frame, 52-16	1	C,H
	2003968-3	. EDU-5/P Frame, 52-18	1	D,I
	2003968-4	. EDU-5/P Frame, 52-20	1	E,J
	2003968-5	. EDU-5/P Frame, 52-22	1	F
-4	2005270-501	. EDU-5/P Case, Protective (Note 2)	1	
-5	2005732-101	. EDU-5/P Sun Insert, 52-14	1	A,B,G
	2005732-102	. EDU-5/P Sun Insert, 52-16	1	C,H
	2005732-103	. EDU-5/P Sun Insert, 52-18	1	D,I
	2005732-104	. EDU-5/P Sun Insert, 52-20	1	E,J
	2005732-105	. EDU-5/P Sun Insert, 52-22	1	G

Notes:
1. CAGE code is 4W129.
2. Protective case includes an instruction sheet and a lint-free cleaning cloth.

NUMERICAL INDEX

Part Number	Figure and Index Number	SM&R Code
2003968-1	8-9-3	PAOZZ
2003968-2	8-9-3	PAOZZ
2003968-3	8-9-3	PAOZZ
2003968-4	8-9-3	PAOZZ
2003968-5	8-9-3	PAOZZ
2005206-1	8-9-2	XAOZA
2005206-2	8-9-1	XAOZA
2005207-1	8-9-2	XAOZA
2005207-2	8-9-1	XAOZA
2005208-1	8-9-2	XAOZA
2005208-2	8-9-1	XAOZA
2005270-501	8-9-4	XAOZA
2005732-101	8-9-5	PAOZZ
2005732-102	8-9-5	PAOZZ
2005732-103	8-9-5	PAOZZ
2005732-104	8-9-5	PAOZZ
2005732-105	8-9-5	PAOZZ
2006572-501	8-9	PAOZZ
2006572-502	8-9	PAOZZ
2006572-503	8-9	PAOZZ
2006572-504	8-9	PAOZZ
2006572-505	8-9	PAOZZ
2006572-506	8-9	PAOZZ
2006572-507	8-9	PAOZZ
2006572-508	8-9	PAOZZ
2006572-509	8-9	PAOZZ
2006572-510	8-9	PAOZZ

Section 8-7. Self-Contained Finger Light

8-87. GENERAL.

8-88. The Self-Contained Finger Light is optional equipment for use by aircrewmembers to provide quick, accurate, NVG compatible cockpit lighting during night flights. The Finger Light (NIIN 01-357-2175) and Lithium batteries (NIIN 01-357-175) are available through normal supply channels. Commercially the Finger Light, FL-5, and Batteries, FL5-B1, are available through open purchase from:

Seitz Scientific Industries, Inc.
201 Hickory Bend Road
Enterprise, AL 36330-1007
Tel: (334) 348-9713

8-89. CONFIGURATION.

8-90. The Finger Light may be attached to any finger on either hand by a stretch velcro band. The self-contained light is powered by two lithium batteries.

8-91. APPLICATION.

8-92. The Self-Contained Finger Light is available to all aircrewmembers as optional equipment.

8-93. OPERATION.

8-94. The finger light, attached to any finger on either hand, is operated by a push ON/OFF switch on the front of the light to turn light ON/OFF as desired.

8-95. MAINTENANCE.

8-96. Maintenance of the finger light is limited to inspection and replacement of batteries. Required records shall be maintained and submitted in accordance with COMNAVAIRFORINST 4790.2.

8-97. INSPECTION. Inspection of the finger light shall be visual inspections consisting of Preflight/Postflight and Special Inspections.

8-98. Preflight/Postflight Inspection. Preflight/Postflight inspections shall be performed by the aircrewmember to whom the light was issued before and after each flight as applicable.

8-99. Special Inspection. The Special Inspection shall be performed every 90 days at organizational maintenance level or above.

8-100. Visual Inspection. The visual inspection is performed as follows:

1. Check function of light.

2. Inspect stretch velcro band for cuts, tears, abrasions, and security of attachment.

3. Inspect batteries and battery compartment for corrosion.

8-101. BATTERY REPLACEMENT. Replace batteries as follows:

1. Pull end-cap off of body tube of the light.

2. Pull cloth tab extending from inside body tube to remove batteries.

3. Insert fresh battery, positive (+) end of battery to positive (+) contact and negative (-) end of battery to negative (-) contact.

4. Reinstall end-cap on body tube.

Section 8-8. FV-9 Laser Eye Protective Spectacles (LEPS)

8-102. GENERAL.

WARNING

FV-9 Laser Eye Protection Spectacles are not shatterproof or breakproof and do not provide an unbreakable shield against eye injury.

8-103. The FV-9 Laser Eye Protection Spectacles NSN: 4240-01-458-5567 consists of a monolithic Polycarbonate lens, mounted on a lightweight wrap-around sports frame. The FV-9 is designed for universal fit with adjustable temples, full front and lateral laser protection and they can be worn over some prescription eyewear. They are carried in a crash resistant carrying case.

8-104. The FV-9 spectacles are designed to protect the eyes from the harmful effects of exposure to two discreet laser wavelengths. The polycarbonate lens is formed through an injection molding process, incorporating an absorptive dye designed to absorb laser emissions ranging from about 800 nanometers (nm) through at least 1064 nm. The FV-9 spectacles provide over 4 OD of attenuation for the two lasers against which they were designed to protect. This level of protection is somewhat higher than EDU-1/P spectacles and neodymium visors but the added protection comes at the expense of transmissivity of visible wavelengths. This higher level of protection is sufficient for all hand held IZLID devices, LANTIRN and ATFLIR tactical mode. FV-9 provides no protection against wavelengths above 1100 nanometers (therefore no protection against ATFLIR training mode at 1540 nanometers or airborne laser wavelengths). For more detailed description of optical densities required for specific laser weaponry, refer to https://home.navair.navy.mil/PMA202/LSRB (laser safety review board) site.

8-105. APPLICATION.

WARNING

FV-9 laser spectacles are physically compatible with Night Vision Image Intensifier Sets (NVIIS). There is a potential for reduction in aircrew acuity due to reduced transmittance when wearing the FV-9 and NVIIS. Low light and poor weather conditions can further degrade the performance of the NVIIS and FV-9 combination. First time users of the FV-9 spectacles shall accomplish a crew station visibility assessment in night unaided and aided modes prior to flight.

8-106. These spectacles are intended for use by all fixed- and rotary-wing aircrewmembers subject to potential laser exposure while operating in the vicinity of laser detection, ranging, or designating systems.

8-107. FITTING.

8-108. The spectacles are designed for a universal fit, adjust the temples to the individual crewmember's comfort.

8-109. MODIFICATIONS.

8-110. The only authorized modification is to the temple arms.

Materials Required

Quantity	Description	Reference Number
As Required	Cloth, Lint-Free, Type II	MIL-C-85043 or equivalent
As Required	Tape Measure	---
As Required	A Marking Device, pencil/ marker	NIIN 01-014-6856
As Required	Engraving Tool	---
As Required	Rotary Tool Kit (Dremal) with 400 series fiberglass-cutting disc	NIIN 01-014-6856
As Required	Metal File	---
As Required	Adhesive Cyamacrylate Ultrabond	NIIN 00-142-9193 or equivalent
As Required	Set of Replacement Temple Arms	Provided by NAVAIR POC
As Required	Heat Shrink 3/16 x 6 inch, Adhesive Lined, GSA, Class I, Black	NSN 73125635

Materials Required (Cont)

Quantity	Description	Reference Number
As Required	Heat Shrink 3/8 x 6 inch, Adhesive Lined, GSA, Class I, Black	NSN 54041777
As Required	Heat Gun	

CAUTION

Wrap lenses in the lint-free cloth to prevent lenses from scratches.

1. Wrap lint-free cloth around FV-9 lenses while performing the following modification.

2. Position FV-9's with nose area perpendicular to tables surface and temple arms are unfolded and fully extended and parallel to the tables surface.

NOTE

If FV-9's have information already engraved on the lens, skip to step 4.

3. Engrave information found on left side temple arm on the top thickest part of FV-9's black frame. The following information that shall be engraved; FV-9, Lotxxxxxxx, month, year, GPT.

4. Ensure temple arms are fully extended out to last position. On the inside of both temple arm housings measure and mark 9/16th inch measuring from temple arm hinge towards the temple arm housing end.

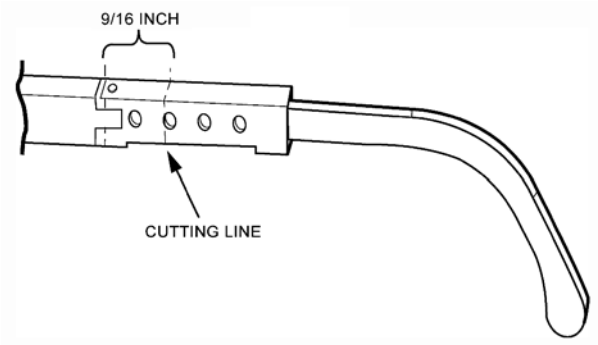

Step 4 - Para 8-110

CAUTION

Use safety glasses while using the rotary tool.

5. Using the rotary tool with the series 400 cutting disc attached, first cut one temple arm housing and then the other temple arm housing in an even downward cut. File off any burrs with the metal file.

6. Lay the 9/16th inch section of temple arm flat on table surface and goggle are perpendicular to table surface. Using the rotary tool and disc again, cutting only the temple arm surface that is facing up and from the cut end towards the temple arm hinge.

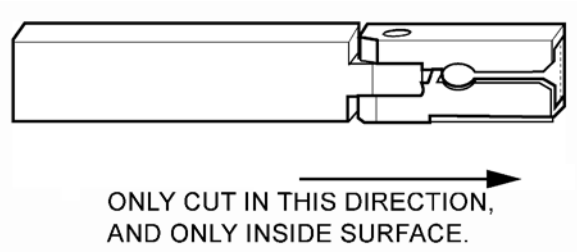

Step 6 - Para 8-110

7. Cut two 5/16th inch lengths of 3/16th inch heat shrink. Slip over the dipped end of each new temple arm until it is stopped by the hinge on the temple arms.

8. Using heat gun, heat shrink until it is snug around temple arm. Do this to both new temple arms and set aside.

CAUTION

Do not allow the glue to seep into the FV-9's hinge area causing the hinge to be glued into the open position. Prior and during the insertion of the new temple arms open and close every few minutes to ensure hinge has not been glued.

NOTE

After the insertion of one new temple arm let dry, ensure that hinge is not glued and glue is dry before inserting the second new temple arm hinge.

9. Lay the temple arm housing flat on table surface where the slotted side is facing up and goggles are perpendicular to table surface. Place one drop of glue into slot near the cut edge. Ensuring heat shrink on the new temple arms does not slide back or become pinched by the end of the temple arm housing, slide the new temple arm into slot with hinge on the new temple arm facing up. New temple arm should snap into place when it reaches the end of the slot. The heat shrink should sit just inside the temple arm housing. Add another drop of glue at end of temple arm housing cut edge. Let dry for a few minutes. Check hinge for ease of movement. Recheck hinge movement several more times until glue has completely dried. Repeat this step for the other new temple arm insertion.

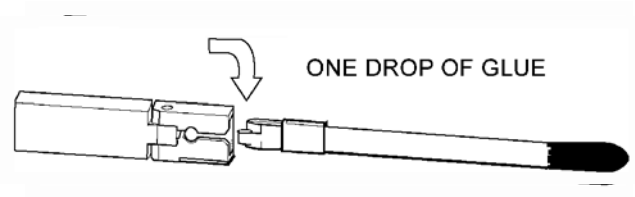

Step 9 - Para 8-110

10. Cut two 1/2 inch lengths of 3/8th inch adhesive lined heat shrink set aside one cut piece of heat shrink. Slide one of the 1/2 inch heat shrinks over the new temple arm and temple arm housing so that it covers most of the temple arm housing and there is 1/8th inch of heat shrink left hanging over the temple arm housing cut end. The heat shrink should cover the slot. Fold temple arm to ensure heat shrink is not obstructing the hinge movement. Using heat gun shrink the heat shrink until tight around temple arm housing and the 1/8th inch is tight around the heat shrink that is on the new temple arm.

11. Repeat steps 10 for the other temple arm.

8-111. MAINTENANCE.

CAUTION

Spectacles are fragile and can be damaged easily. Care should be used in handling to prevent scratching and breakage. When not in use, always keep the spectacles in their case. A lens is considered damaged and not to be used if a scratch is detected that exceeds one-third the thickness of the lens. A lens can continue to be used if a scratch of less depth is detected and is not in the critical vision area or reported as bothersome by the aircrewmember. Damaged lenses should be disposed of in accordance with paragraph 8-116.

8-112. The aircrewmember's responsibility for maintenance of the FV-9 spectacles is limited to pre/post-flight Inspection and cleaning. Repairs or other maintenance actions required shall be performed by organizational level or above. All maintenance actions and inspections shall be documented in accordance with COMNAVAIRFORINST 4790.2.

8-113. PLACE-IN-SERVICE AND SPECIAL INSPECTIONS. The Place-In-Service and Special Inspections are visual inspections to be performed at organizational level or above in accordance with paragraph 8-114. The Place-In-Service Inspection shall be performed prior to issue upon placing the FV-9 Spectacles in service. The Special Inspection shall be performed when the aircrewmember returns the FV-9 Spectacles for repairs.

8-114. VISUAL INSPECTION. The visual inspection shall be performed as follows:

1. Check lenses for scratches, abrasions or other damage.

2. Check wraparound frames for signs of damage.

8-115. CLEANING. To clean the FV-9 Laser Eye Protection Spectacles, proceed as follows:

Materials Required

Quantity	Description	Reference Number
As Required	Cloth, Lint-Free	NIIN 00-165-7195
As Required	Tissue, Facial	-----
As Required	Compound, Anti-Fogging	NIIN 00-754-2672

CAUTION

Do not use abrasive cleaners or polish on lenses to remove scratches.

1. Lightly wipe all dust and dirt from lenses using a clean, soft, lint-free cloth.

2. Clean lenses with a moistened cloth or apply moisture by breathing on the lenses and wiping with a clean, soft, lint-free cloth.

3. Dry spectacles with a fresh, soft, facial tissue or clean, soft, lint-free cloth.

4. (Optional) Apply anti-fogging compound to spectacle lenses.

8-116. DISPOSAL.

8-117. If the FV-9 spectacles are damaged beyond use, they shall be destroyed by the organizational maintenance level by any means available (incinerated, crushed, shattered) prior to final disposal.

CHAPTER 9

NAVY COMBAT EDGE AIRCREW PROTECTIVE ASSEMBLY A/P22P-16

9-1. GENERAL.

9-2. The Navy Combat Edge (NCE) A/P22P-16 Aircrew Protective Assembly (Figure 9-1) is designed to provide the aircrewmember with a pressure breathing for g (PBG) system for protection against the effects of positive acceleration (+4 to +9g) at altitudes up to 50,000 feet. The basic NCE concept is based on an advanced technology system developed by the United States Air Force. The Navy enhanced the USAF system with Navy unique features compatible with current life support, survival, and rescue equipment. The man-side components of NCE consist of the HGU-87(V)/P22P-16 Helmet and the HGU-89/P22P-16 Helmet, MBU-24/P22P-16 Oxygen Mask, CSU-21/P22P-16 Counter Pressure Vest, CRU-103/P Oxygen Regulator, and CSU-20/P22P-16 Anti-g Garment. The anti-g valve system installed in the aircraft senses the onset of positive g-forces and automatically provides pressurized air to the anti-g garment and oxygen regulator. Regulated oxygen is then supplied to the NCE assembly equipment to provide for vest and helmet bladder inflation and positive pressure breathing. See Figure 9-2 for functional diagram of the NCE system.

9-3. CONFIGURATION.

9-4. The HGU-87(V)/P22P-16 helmet is a modified HGU-68(V)/P. The modification provides for automatic tensioning of the mask required for anti-g (PBG) pressure breathing. It consists of an air bladder installed between the thermoplastic liner (TPL) and the energy absorbing liner in the lower rear portion of the helmet. A bladder air/oxygen supply hose passes through the helmet shell and is connected to the female side of a quick disconnect. The bladder is automatically inflated with the onset of positive g-forces to keep the aircrewmember's mask tight to his face while the NCE system is providing positive pressure to the mask. The quick disconnect permits separation of the helmet and mask for maintenance and parachute descent procedures. The helmet visor is modified on the lower edge to fit snugly against the MBU-24/P oxygen mask. Refer to NAVAIR 13-1-6.7-3 for details of the HGU-87(V)/P helmet or HGU-89/P22P-16.

9-5. The CSU-21/P22P-16 Counter Pressure Vest Assembly is worn over the standard flight suit. The vest inflates with oxygen to a pressure determined by the automatic valve system installed in the aircraft to provide counter-pressure breathing to counteract g-forces. Refer to Chapter 4, Anti-g Garments, for details of the CSU-21/P.

9-6. The CSU-20/P22P-16 is similar to the CSU-13B/P and CSU-15/P but provides a 40% increase in leg and abdomen coverage to further aid in restricting the flow of blood to the lower portion of the body. For details of the CSU-20/P, refer to Chapter 4, Anti-g Garments.

9-7. The MBU-24/P22P-16 Oxygen Mask contains separate inhalation and exhalation valves. The MBU-24/P is specifically designed for use with the HGU-87(V)/P helmet and the NCE system. Refer to NAVAIR 13-1-6.7-3 for details of the MBU-24/P oxygen mask.

9-8. The HGU-89/P22P-16 Helmet is a modified HGU-85(V)/P. This modification provides for the use of MXU-810/U Night Vision System and can be modified to accommodate the AN/AVS-9 Night Vision Image Intensifier Set (NVIIS).

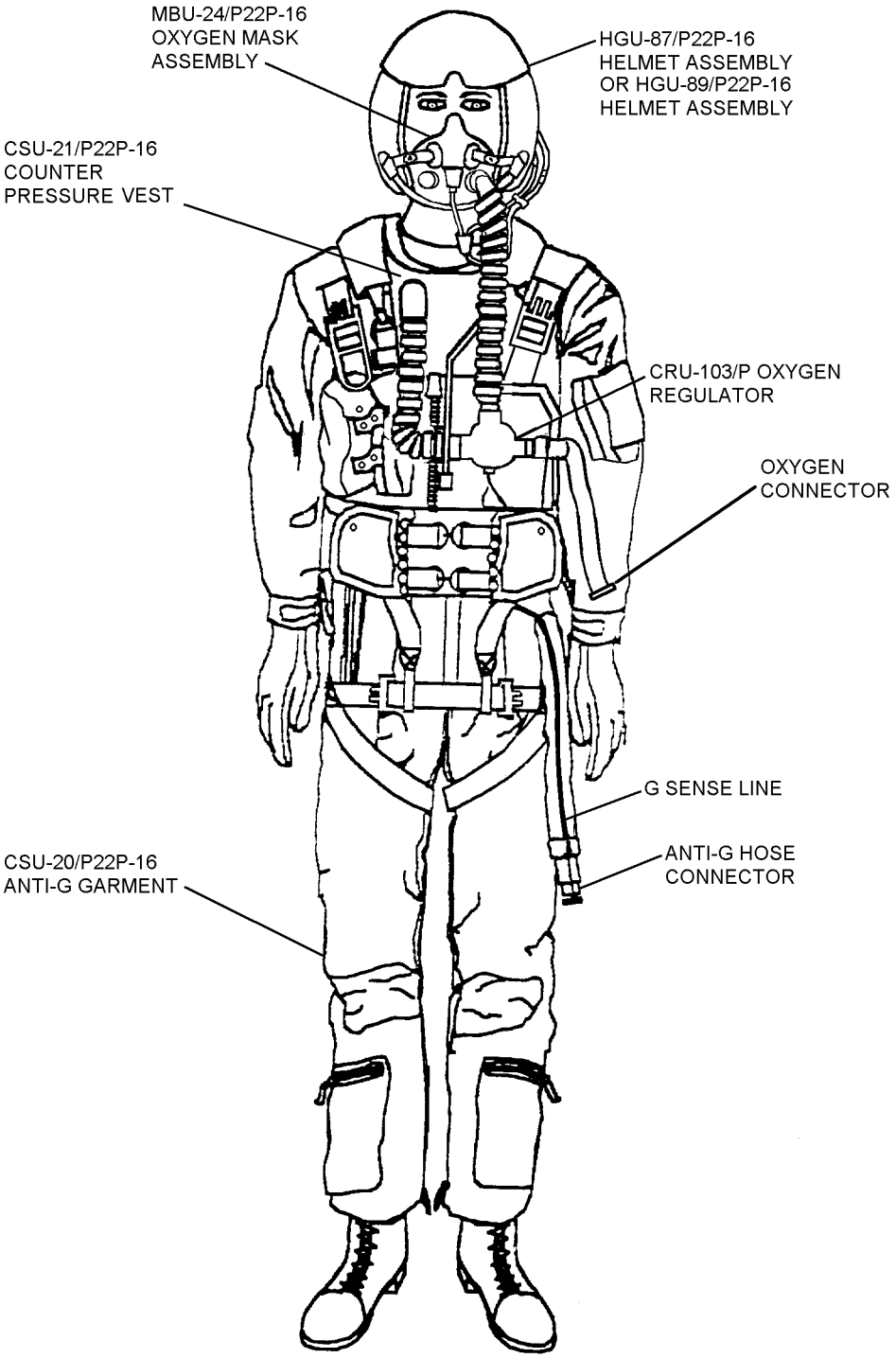

9-1

Figure 9-1. Navy Combat Edge A/P22P-16 Aircrew Protective Assembly

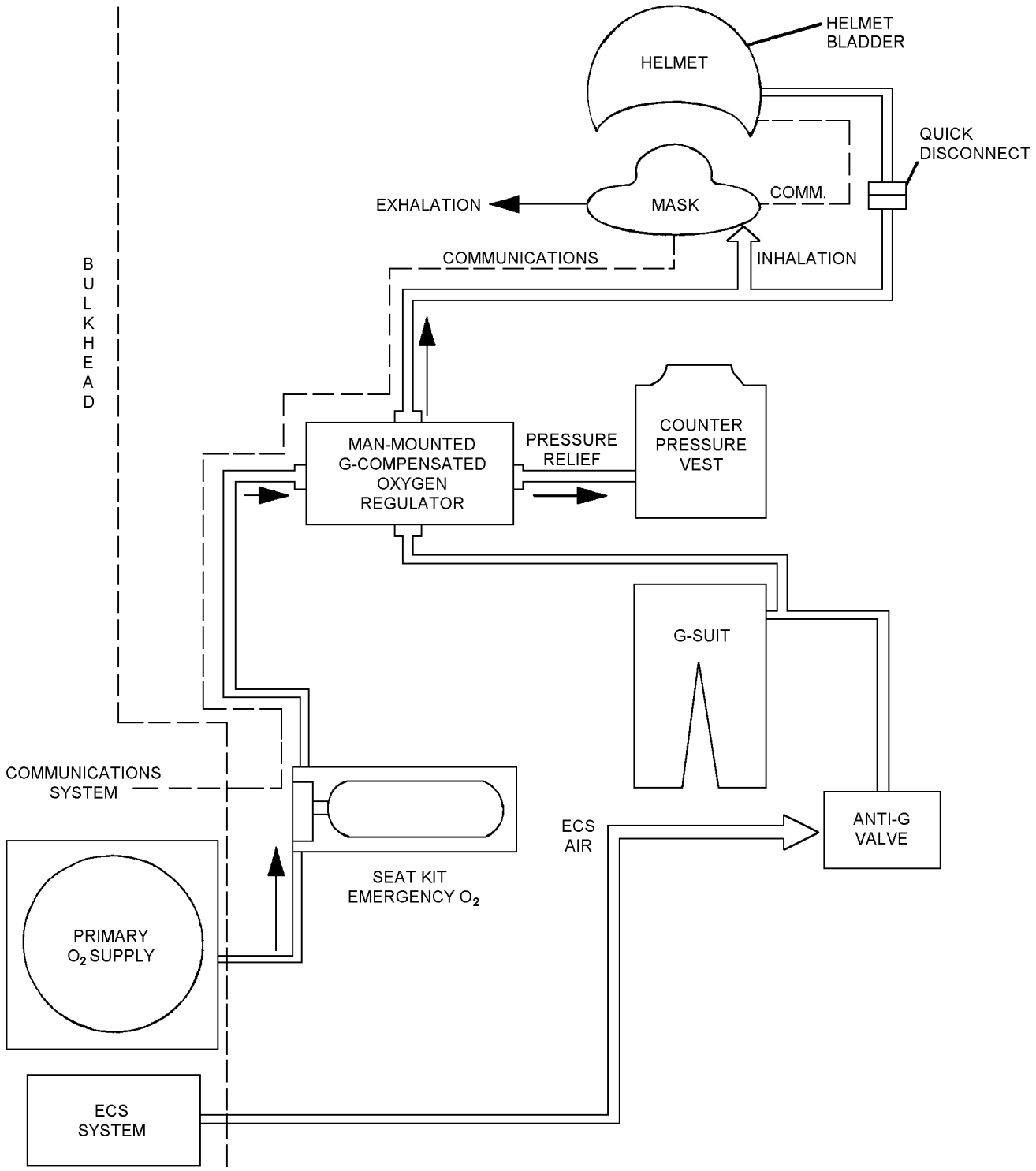

9-2

Figure 9-2. NCE A/P22P-16 Aircrew Protective Assembly Functional Diagram

THIS PAGE INTENTIONALLY LEFT BLANK.

CHAPTER 10

CUSTOM FIT AIRCREW FLIGHT CLOTHING

10-1. GENERAL.

10-2. CUSTOM FIT FLIGHT APPAREL. Procedures for ordering custom fit flight apparel are as follows:

NOTE

The standard lead-time for custom fit flight apparel is 90 days.

1. Have the regional FAILSAFE Tiger Team representative or, if not available, the Aeromedical Safety Officer (AMSO) verify that the current authorized garment does not properly fit the aviator/aircrewmember.

2. Forward message request for custom fit to TYCOM via normal chain of command with an information copy to COMNAVAIRSYSCOM, Patuxent River, MD, PMA 202 and COMNAVAIRWARCENACDIV, Patuxent River, MD, 4.6.1.2/4.6.3.1 including name of FAILSAFE member/AMSO who verified the custom fit requirement.

3. After receiving custom fit authorization, complete the following documentation, as applicable:

a. Form 1348-6, Single Line Item Requisition System Document. Do not put a NIIN in this document.

b. NAVAIR Form 10126/1 (4-98).

c. Paper tracing of both feet if request is for footwear (socks/boots) and Form DD150.

d. Tracing of both hands for gloves.

e. National Stock Number (NSN) of closest size garment.

f. Color and brief description of item.

g. Requested delivery date. If routine request, enter 30 days. Otherwise, identify deployment date.

h. Unit point of contact (name and phone number).

4. Forward applicable documentation cited in step 3 for all Summer Flyer's Coveralls, CWU-36/P Summer Flyer's Jacket, CWU-45/P Cold Weather Flyer's Jacket, G-1 Intermediate Flyer's Jacket, CWU-72/P Liner, CWU-75/P Socks, CSU-13B/P Anti-g Garment, CWU-62 Series Anti-Exposure Coveralls, Neck and Wrist Seals to:

Director
Navy Clothing and Textile Research
Facility (NCTRF)
Code N2.SM, Bldg. 1 Mailroom
700 Robbins Ave.
Philadelphia, PA 19111-5008

To expedite order, fax to: DSN: 444-3803 or Com: 215-737-3803; Voice: 215-737-7954. Preferred method is fax.

5. Orthopedic and non-commercial footwear must be submitted using website http:www.warfighter.net or http://ct.dscp.dla.mil/ascot.

a. Original requisition DD Form 1348 and accompanying DD Form 150 with foot tracing must be mailed or sent by courier to:

Veterans Integrated Service Network 3
ATTN: Ruben Morales, Medical Center
423 East 23 Street
New York, NY 10010

b. Questions shall be directed to:

Scott Reifsnyder
COMM: 215-737-5615
DSN: 444-5615
Email: sreifsnyder@dscp.dla.mil

6. A copy of the authorization message shall be made a permanent NATOPS entry. A copy shall be attached to the Aircrew Systems Record, OPNAV 4790/138. A copy of the message shall also be provided to the aviator/aircrewmember for their personal record.

7. Messages of authorization granting the custom fit shall remain in effect until the aviator/aircrewmember is discharged or resigns from the Navy/Marine Corp.

10-3. Custom, or tailor-made, flight clothing begins with obtaining correct measurements of the individual for whom the flight clothing is being tailored. Correct measurements can only be determined by following

proper measurement procedures. The intent of this chapter is to provide these proper measurement procedures.

10-4. ACCESS TO PHYSIQUE. Proper measurements can not be determined without access to the individual's body shape. Attempting to obtain measurements of an individual whose body shape is obscured by street clothing containing personal items such as wallets, pens and pencils, insignia, etc. will not produce the desired results. Light physical training clothes are the recommended choice of clothing to be wearing during the measurement process because they tend to be thin and brief. Running shorts and tank-top are best because a lot of bone structure that help to define measurements are visible. Spandex or other expandable material is not good because such material compresses the shape of the body too much. If the individual to be measured is not wearing the recommended apparel, have them empty all pockets and remove belts, shoes and socks. If the person is wearing a T-shirt under a dress shirt, the dress shirt should be removed.

10-5. POSITION. The person to be measured should stand straight, eyes looking forward (preferably at a fixed point), heels together, and weight evenly distributed on both feet. The arms should hang at the sides naturally unless otherwise instructed.

10-6. SUPPORT EQUIPMENT AND TOOLS. Recommended equipment and tools required for this procedure includes a full length mirror, a cloth or vinyl measuring tape (in good condition and legible), a 3 X 5-inch piece of 1/8-inch thick cardboard, an 8-foot metal measuring tape, adhesive tape, a grease pencil, a rubber band, and NAVAIR Form 10126/1 on which to record all measurements.

10-7. THE WAISTLINE - MALE VS FEMALE. Location of the waistline is an extremely important factor. If not correctly determined, other measurements will also be incorrect. A good estimate of waistline location is where a person chooses to wear a belt. However, men and women normally wear their belts differently. Women tend to wear waistbands on top of their abdomens at the narrowest point of their waist, while the position a man wears his belt often depends on his general physical condition. If he has a protruding abdomen, he may wear his belt below his abdomen. Generally, however, a man wears his belt in a near horizontal position resting on his pelvic, or hip-bone, and crossing his body in the general area of his navel (see Figure 10-1). If the individual is wearing running shorts, the waistband position of the shorts may not be a good indicator since they tend to ride a little low. Have an adjustable belt available so the individual can position it where normally worn.

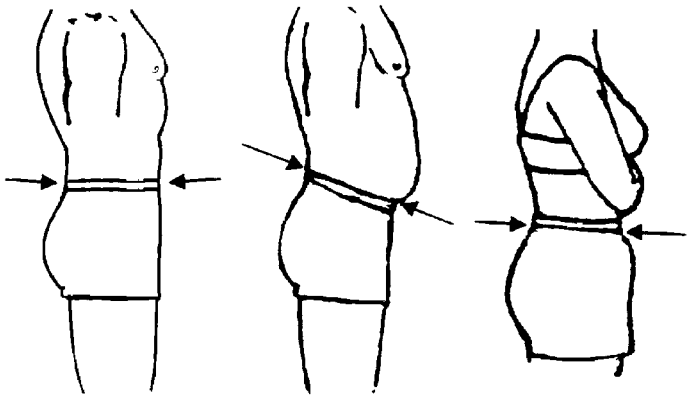

Figure 10-1. Waistline Location

10-1

10-8. PROBLEM AREAS.

10-9. Accuracy can not be over-emphasized. A small error in a critical measurement may affect other critical measurements resulting in rejection of the garment and unnecessary cost. If an individual has an unusually proportioned body, ensure a complete description of the difference is provided in block 15 of NAVAIR Form 10126/1, (Figure 10-2) and/or provide a photograph of the individual with the order.

1. Position of the measuring tape is important. Some of the circumference measurements require the tape to be horizontal, parallel to the floor all the way around, while other measurements must be vertical. Use of a full length mirror to act as another pair of eyes will ensure proper tape position. Another source of error is caused by movement of the individual being measured. Having the person stare at a given eye-level point within the room or out a window while being measured may help eliminate or reduce movement. Holding the tape too tightly compressing the individual's body will also result in an inaccurate measurement.

2. Proper completion of Form 1348 and NAVAIR Form 10126/1 is also essential for satisfactory customizing. Complete all required tasks and enter data on forms accurately and legibly. Missing, incorrect, or illegible data may result in unsatisfactory completion of the order. See paragraph 10-26 and Figure 10-4.

3. If at all possible, send in several requisitions at a time. Customizing is done by contract and a single or small order requisition may not receive the prompt action that larger orders receive. Keep track of orders and timing and take action when required. If the order is not received in 30 days contact the following:

Officer In Charge
Navy Clothing and Textile Research
Facility (NCTRF)
700 Robbins Ave, Bldg 6
Philadelphia, PA 19111
Attention: Code N2-SM
Telephone (215) 737-7954
DSN 444-7954
FAC (215) 737-3803

NOTE

If telephone contact is made with the NAWCAD point of contact (POC), follow with written report to document the action.

4. If customizing error has been made, send garment to Defense Supply Center - Philadelphia (DSCP) at the following address for necessary action and advise NCTRF POC.

Defense Supply Center Philadelphia (DSCP)
700 Robbins Ave, Bldg 6
Philadelphia, PA 19111
Attn: Code DSCP-FN

10-10. CUSTOM-SIZED MEASUREMENT.

10-11. Refer to NAVAIR Form 10126/1, Aircrew Custom-Sized Clothing Measurement Form (Figure 10-2). The following procedures refer to and expand upon the numbered blocks of the form. All measurements shall be made to the nearest 1/2 inch and recorded in the space provided in each block of the form.

10-12. WEIGHT (BLOCK 1). The individual shall be weighed wearing the same attire to be worn during measuring process. Weigh and record weight in block 1 of the form.

10-13. HEIGHT (BLOCK 2). The individual shall be barefooted, standing straight, heels together, and looking straight ahead. Measure the person's height and record it in block 2 of form.

AIRCREW CUSTOM-SIZED CLOTHING MEASUREMENT FORM

1. AIRCREW TO BE FITTED	2. SOCIAL SECURITY NO.	3. RANK/GRADE	4. TODAY'S DATE (YYMMDD)
5. COMMAND	6. STATION (E.G. CVN-72, MCAS IWAKUNI, NAS NORFOLK, ETC)		7. DATE NEEDED BY (YYMMDD)
8. PCS/DEPLOYMENT DATE (YYMMDD)	9. NEXT DUTY STATION		10. REQUISITION NO.
11. MEASUREMENTS TAKEN BY (PRINT)			12. PHONE NUMBER
13. ITEM REQUESTED	14. QTY	15. FAILSAFE TIGERTEAM SIGNATURE AND DATE (YYMMDD)	

MEASURING INSTRUCTIONS:

- *Take measurements using cloth tape, rounding up all measurements to nearest 1/2" inch.*
- *Measure over underwear, OR over loose, thin shorts and tank top but NOT over spandex (Lycra®).*
- *Measurements should be taken with BAREFOOT person standing up straight, heels together, arms at sides, and eyes looking straight ahead unless otherwise instructed below.*
- *Use a full length mirror to make sure tape is lined up in back.*

IMPORTANT: NEVER add extra for "ease" or mobility. The patternmaker will add this later.

1. WEIGHT: (in pounds)

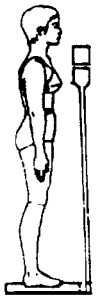

2. HEIGHT: Person should be barefooted, standing with heels together, eyes looking straight ahead.

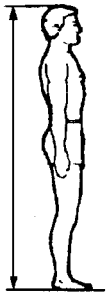

3. CHEST CIRCUMFERENCE: Measure circumference of fullest part of chest, keeping tape level to the deck all the way around.

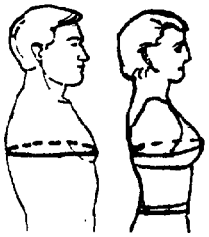

4. INSEAM: Assemble the device in Figure 1 (over). Have person position curved edge against groin to the right of genitals). Extend tape straight down to floor and read at floor.

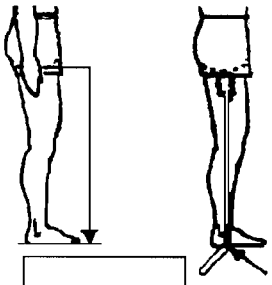

5. OUTSEAM: Start tape at side waistline (top of belt if MAN, bottom of belt if WOMAN). Follow general outline of leg (but not every bump and curve) down to floor.

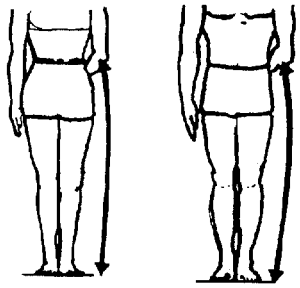

6. BACK WAIST LENGTH: Mark bony knob on back of neck. Ask person to don a belt at his/her waistline. Measure neck mark to just above belt if MAN, just below belt if WOMAN, following curve of the back.

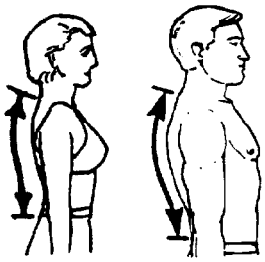

7. BACK WIDTH: Mark back "corner" of flat-edged left and right shoulder bones. Measure distance between left and right shoulder marks across the back.

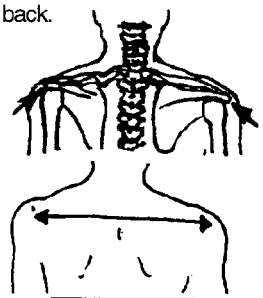

FOR OFFICIAL USE ONLY

Predicted Size:

NAVAIR FORM 10126/1

Figure 10-2. Aircrew Custom-Sized Clothing Measurement Form (Sheet 1 of 2)

8. SLEEVE LENGTH: Stand in back of person. Mark middle of bony knob at base of neck. On DOMINANT arm, mark wristline with rubberband (see Wrist Circumference below). Measure from neck mark over middle of shoulder ball down to rubberband.

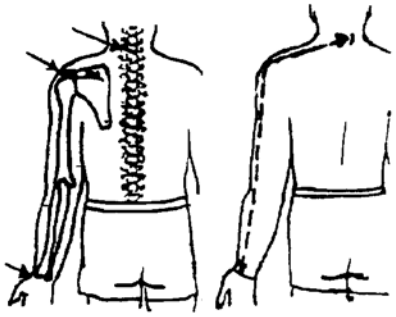

9. SEAT CIRCUMFERENCE: From side of body, measure circumference of body at fullest part of buttocks, without any compression. Keep tape level to deck all the way around the body.

10. BALL OF FOOT CIRCUMFERENCE: (for anti-exp. Socks): Measure widest part of DOMINANT foot across ball. Include nearby bunions and corns. Attach tracing of foot to form.

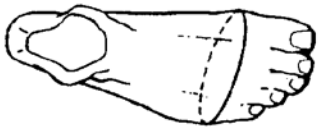

11. WAIST CIRCUMFERENCE: Measure circumference along waistline (just above belt if MAN, just below belt if WOMAN) without compression. Tape may be tilted front to back.

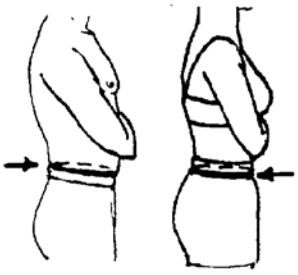

12. WRIST CIRCUMFERENCE (FOR WRIST SEAL): on DOMINANT wrist, place rubberband at indentations between wrist and hand. Measure circumference just above rubberband.

13. NECK CIRCUMFERENCE (FOR NECK SEAL): Wrap tape at the level of the voice-box ("Adam's apple") Find by asking person to swallow. Measure circumference.

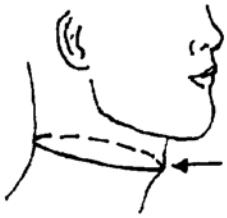

Figure 1. Inseam Device
a) Using 1/8″ thick cardboard, trace and cut out device below.
b) Fasten measuring tape so that 0″ is 1/2″ above lower edge.

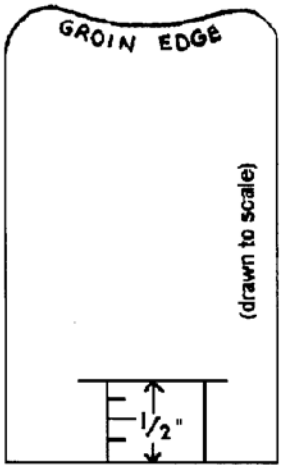

14. Using a comparison garment, describe the fitting problems (e.g., "crotch 3″ too long", etc.) and problem body areas (e.g., "barrel chest", etc.).

14a. **IMPORTANT!** NSN of Comparison Garment:

15. If a WELL-FITTING garment is available, measure area (e.g., inseam, sleeve length, neck-to-crotch) corresponding to problem in #14. Write here:

FOR OFFICIAL USE ONLY

Figure 10-2. Aircrew Custom-Sized Clothing Measurement Form (Sheet 2 of 2)

10-14. CHEST CIRCUMFERENCE (BLOCK 3). The individual shall stand with hands on hips and feet together. Standing at individual's side, pass the measuring tape across the fullest part of the chest, around the back and to the front. Use the full length mirror to ensure tape is kept horizontal and parallel to the floor across the back and all around. The individual shall then place hands at the side and relax the shoulders. Take measurement when the person inhales naturally. Record measurement in block 3.

NOTE

Do not hold tape tight enough to compress any part of the person's body.

At times the tape may slip off the chest, especially when measuring a woman. Do not pull tape tighter to keep it in place. Do not let the person hold the tape in place; raising the arms will cause the chest to expand. Try rubbing wax on the tape to keep it from slipping.

When measuring a woman, she should be wearing a bra like the one she normally wears when flying.

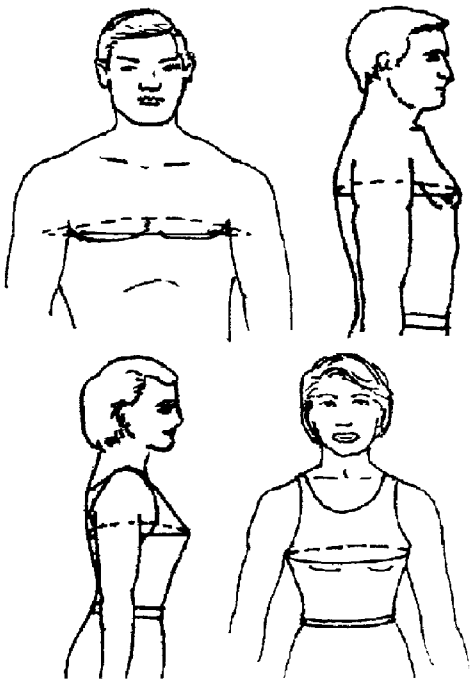

10P13

Para 10-14

10-15. INSEAM (BLOCK 4). Using the pattern in Figure 10-3 fabricate the device illustrated. Then have the individual being measured hold the device between the legs with the top, marked GROIN SIDE, against the groin, to the right of the genitals. Extend the attached tape straight down to the floor and measure the distance to floor level. Record measurement in block 4.

NOTE

Ensure the person's feet are not too far apart or the reading will be too short. The feet should be just far enough apart to permit the tape to be read.

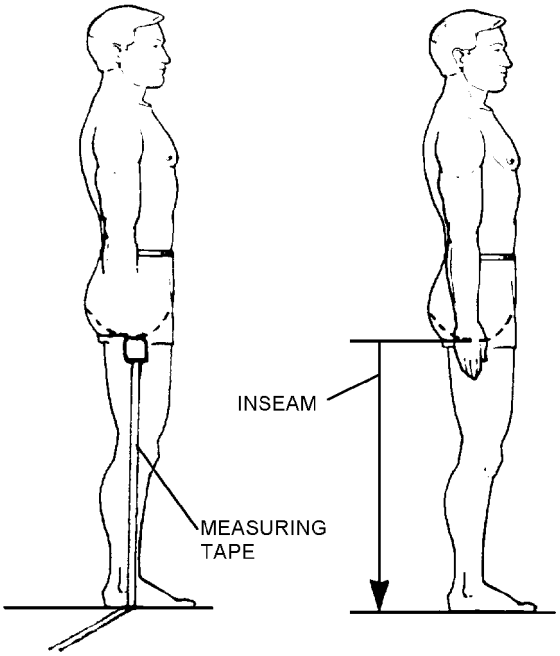

10P14

Para 10-15

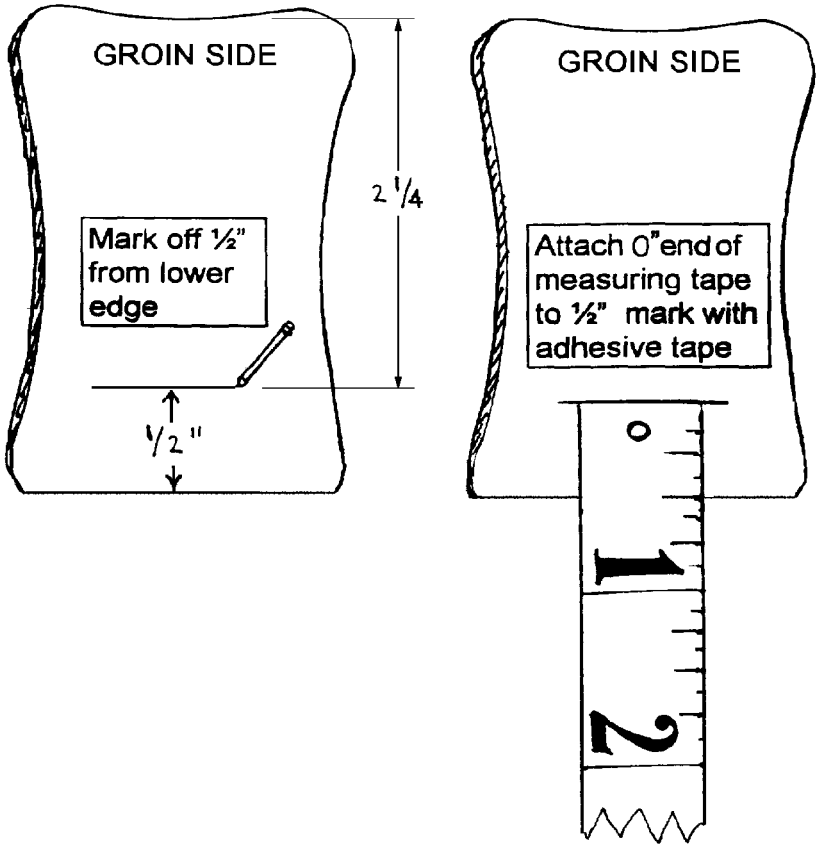

10-3

Figure 10-3. Inseam Measuring Device

10-16. OUTSEAM (BLOCK 5). Standing at individuals side measure from the individual's waistline (from top of belt if measuring a man, from bottom of the belt if measuring a woman) to the floor following the general curve along the hip and down the leg (but not every bump, bulge, or indentation). Record measurement in block 5.

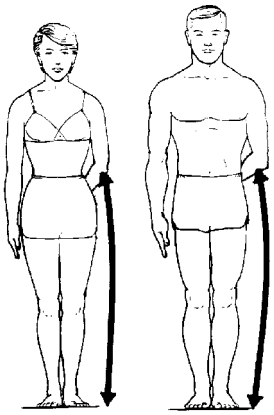

10p15

Para 10-16

10-17. BACK WAIST LENGTH (BLOCK 6). Have individual position and secure a belt around the waist. Then, standing behind the person, measure the distance between the cervical bone (large bony knot in the spinal column at the base of the neck) and the waistline (to the top of belt if measuring a man, to the bottom of the belt if measuring a woman) following the curve of the back. Record measurement in block 6.

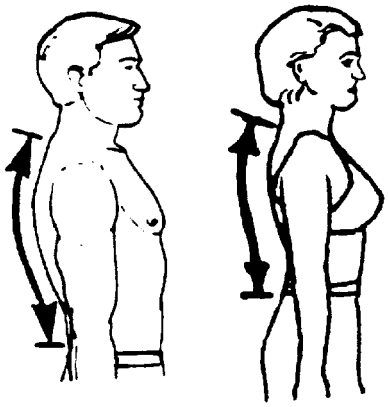

10p16

Para 10-17

10-18. BACK WIDTH (BLOCK 7). Standing behind the individual, place a hand on the outside of one of the individual's arms. Starting at the elbow, slide hand up the arm until the shoulder ball is reached (the shoulder ball will roll when the arm is raised). Just above the shoulder ball is a flat-edged bone (acromion) which does not roll when the arm is moved. Use the outside edge of the index finger to line up against this bone. Trace the end edge of this bone until the back "corner" is reached and mark the position with a grease pencil. Repeat this procedure for the other shoulder. Measure the distance between the marks to determine the back width and record measurement in block 7.

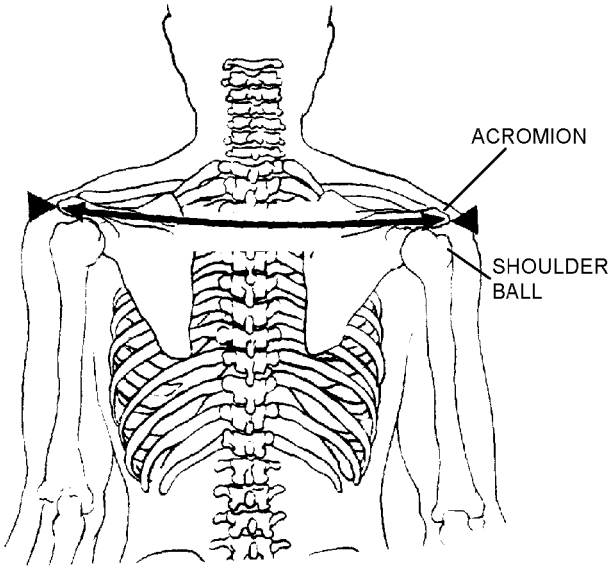

Para 10-18

10-19. SLEEVE LENGTH (BLOCK 8). Determine sleeve length as follows:

1. Standing behind the individual locate the cervical bone (the large bony knob at the base of the neck). If the bone is not apparent, ask the individual to bow head and lower the chin to the chest and the bone will protrude. Keep tapping your finger on the bone while the individual slowly raises the chin to its normal position and place a mark on the skin at the middle of the bone.

2. With the individual in standing position, find the wristline on the dominant arm and place a rubber band around arm at that point. (The wristline is the place where the hand joins the wrist and the hand can move side to side as well as up and down.)

3. Measure sleeve length from the mark at the cervical, crossing over the middle of the shoulder ball and down to the rubber band at the wristline. Record sleeve length in block 8.

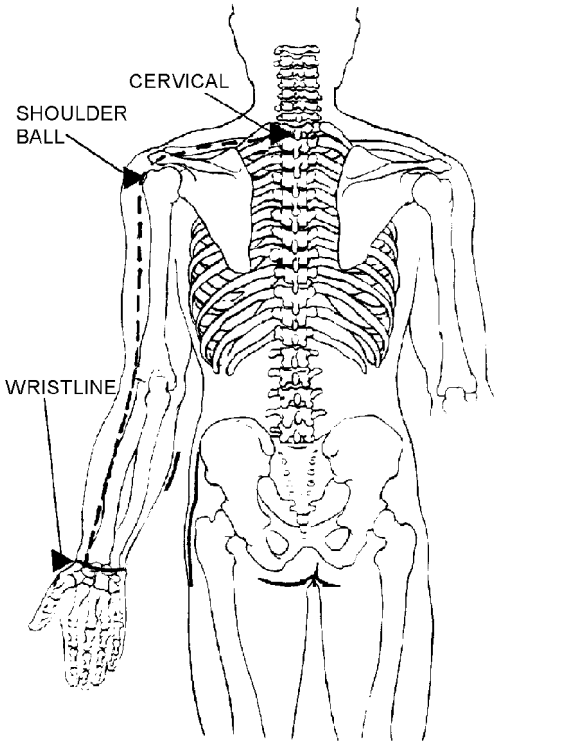

Para 10-19

10-20. SEAT CIRCUMFERENCE (BLOCK 9). With the individual standing with arms crossed at the chest, stand at individual's side and visually locate the fullest part of the buttocks (seat). Pass the tape around the body from the left side to the right side, passing over the fullest part of the seat, keeping the tape parallel with the floor. Use the full length mirror to ensure tape is horizontal and parallel with floor. Do not compress the body by holding the tape too tightly in position. Record seat measurement in block 9.

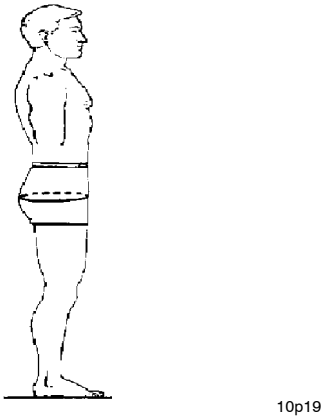

Para 10-20

10-21. BALL OF FOOT CIRCUMFERENCE (BLOCK 10). With individual standing with feet about four inches apart wrap tape under the ball of the foot and across the widest part of the foot. If foot has bunions and/or corns which extend the width of the foot, ensure tape is positioned to include them in measurement. Ensure weight is evenly distributed on both feet, then measure circumference of the ball of the foot. Trace outline of individual's foot on a sheet of paper and attach paper to NAVAIR Form 10126/1. Record measurement in block 10.

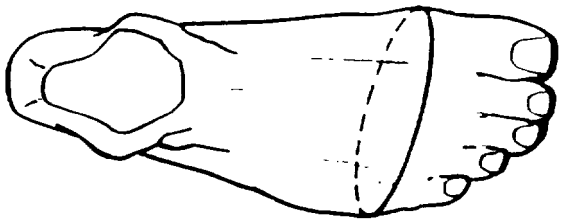

10p20

Para 10-21

10-22. WAIST CIRCUMFERENCE (BLOCK 11). Have individual put on adjustable belt at waistline and ensure it is not cinched too tightly. A belt or measuring tape cinched too tightly will result in custom-sized flight clothing that fit too tightly. Pass the tape around the waist, making sure tape does not compress the body, and measure circumference of the waistline (just above the belt for men and just below the belt for women). Record measurement in block 11.

NOTE

Depending on the person's build, the measuring tape may appear to tilt down back to front.

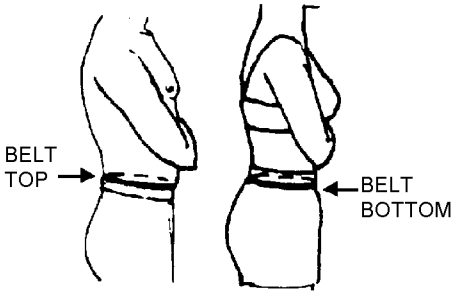

10p21

Para 10-22

10-23. WRIST CIRCUMFERENCE (FOR WRIST SEALS) (BLOCK 12). On dominant arm find wristline. (The wristline is the place where the hand joins the wrist and the hand can move side to side as well as up and down.) Measure circumference just above wristline (nearest hand). Record measurement in block 12.

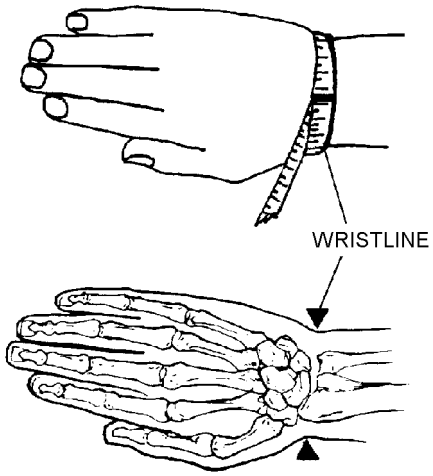

10p22

Para 10-23

10-24. NECK CIRCUMFERENCE (FOR NECK SEAL) (BLOCK 13). Locate voice box (Adam's apple). (If having trouble finding it, ask individual to swallow. Voice box will visibly move up and down.) Measure neck at level of the voice box. The tape may not be parallel to the floor, since the measurement should be taken with the tape perpendicular to the long axis of the neck. Record measurement in block 13.

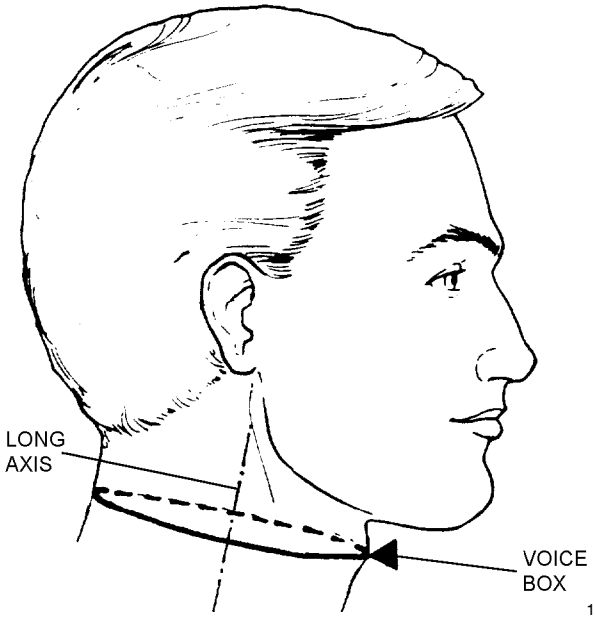

10p23

Para 10-24

10-25. DESCRIPTION OF FITTING PROBLEMS (BLOCK 14). Block 14 is mandatory. Block 14 not being filled in usually causes delays in custom manufacturing of clothing items. It is imperative that the pattern makers have a starting point to use in manufacturing a custom fit item. Use block 14 to help the pattern makers by annotating the (NIIN) of the item the aircrew is currently wearing (best fit) and describe in detail why that particular size isn't working (e.g. arms too short) for the aircrew. The NIIN for the current or best-fit clothing item must also be annotated in this block.

10-26. EXAMPLE OF COMPLETED NAVAIR FORM 10126/1.

10-27. The following is an example of what could happen when a patternmaker at Defense Supply Center receives a NAVAIR Form 10126/1 which has been prepared without due regard for accuracy and legibility.

1. Using the measurement example below, check your work. If rise is not within recommended estimates or measured height does not equal estimated height, the person should be remeasured. In column 1, using data provided, determine rise. (It should be 9 to 12 inches for men and 11 to 14 1/2 inches for women.)

2. First the patternmaker will check the data received. If he finds apparent errors and/or what appears to be conflicting data, he will attempt to contact the requesting organization for confirmation of the data. However, due to illegible or missing data on the form, the requesting organization can not be contacted to confirm or provide the data. The patternmaker must therefore proceed using experience and various charts and tables at his disposal. Referring to the completed NAVAIR Form 10126/1 (figure 10-4) the appropriate data is obtained and the mathematics indicated in the measurement example below is performed.

3. After all other measurements provided are corrected to the patternmaker's satisfaction, using provided height, weight, and chest circumference data, the best fitting size will be determined from appropriate size charts. The result may or may not be anywhere near the custom-sized garment desired.

10-28. The process above is provided to emphasize the necessity of ensuring accurate, legible data and the need for checking all data to be provided. One wrong measurement or illegible entry can snowball into wasted time, effort, and cost.

Column 1		**Column 2**	
Outseam:	_____	Back Waist Length:	_____
Inseam: –	_____	Outseam: +	_____
=	_____	Head + Neck Length +	10
(Rise)			
Measured Height =	_____ Should Equal	Estimated Height =	_____

Measurement Example

AIRCREW CUSTOM-SIZED CLOTHING MEASUREMENT FORM

1. AIRCREW TO BE FITTED JOHN DOE	2. SOCIAL SECURITY NO. 000-00-0000	3. RANK/GRADE LT	4. TODAY'S DATE (YYMMDD) 980313
5. COMMAND VX-1	6. STATION (E.G. CVN-72, MCAS IWAKUNI, NAS NORFOLK, ETC) NAS PATUXENT RIVER		7. DATE NEEDED BY (YYMMDD)
8. PCS/DEPLOYMENT DATE (YYMMDD) 980418	9. NEXT DUTY STATION MCAS IWAKUNI		10. REQUISITION NO. DON'T LEAVE BLANK!
11. MEASUREMENTS TAKEN BY (PRINT) Kim Parell ← WHO? PRINT CLEARLY!			12. PHONE NUMBER DSN 342-9999
13. ITEM REQUESTED CWU-27/P	14. QTY 03	15. FAILSAFE TIGERTEAM SIGNATURE AND DATE (YYMMDD) DON'T LEAVE BLANK!	

MEASURING INSTRUCTIONS:

- *Take measurements using cloth tape, rounding up all measurements to nearest 1/2" inch.*
- *Measure over underwear, OR over loose, thin shorts and tank top but NOT over spandex (Lycra®).*
- *Measurements should be taken with BAREFOOT person standing up straight, heels together, arms at sides, and eyes looking straight ahead unless otherwise instructed below.*
- *Use a full length mirror to make sure tape is lined up in back.*

IMPORTANT: NEVER add extra for "ease" or mobility. The patternmaker will add this later.

1. WEIGHT: (in pounds)

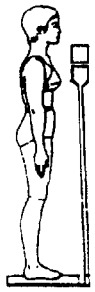

238

2. HEIGHT: Person should be barefooted, standing with heels together, eyes looking straight ahead.

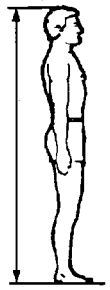

6'7"

3. CHEST CIRCUMFERENCE: Measure circumference of fullest part of chest, keeping tape level to the deck all the way around.

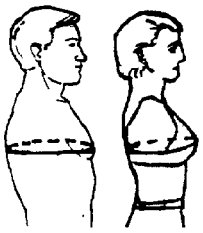

48"

4. INSEAM: Assemble the device in Figure 1 (over). Have person position curved edge against groin to the right of genitals). Extend tape straight down to floor and read at floor.

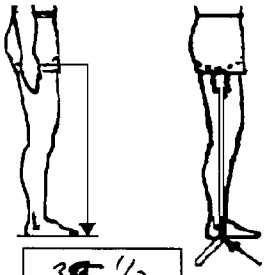

39 1/2

5. OUTSEAM: Start tape at side waistline (top of belt if MAN, bottom of belt if WOMAN). Follow general outline of leg (but not every bump and curve) down to floor.

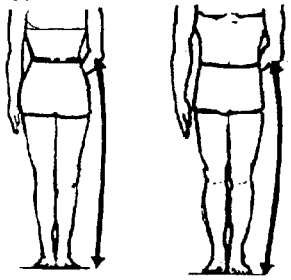

47

6. BACK WAIST LENGTH: Mark bony knob on back of neck. Ask person to don a belt at his/her waistline. Measure neck mark to just above belt if MAN, just below belt if WOMAN, following curve of the back.

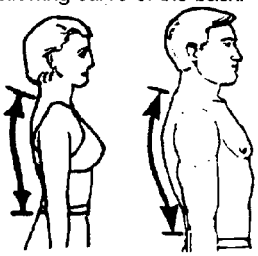

21 1/2"

7. BACK WIDTH: Mark back "corner" of flat-edged left and right shoulder bones. Measure distance between left and right shoulder marks across the back.

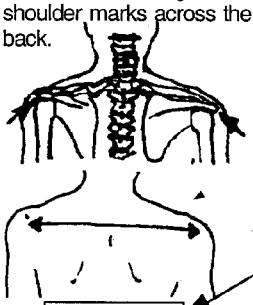

20 3/8"

FOR OFFICIAL USE ONLY
Predicted Size:

IS THIS 35, 37, OR 39?

ROUND TO NEAREST 1/2"

NAVAIR FORM 10126/1

Figure 10-4. Example Completed NAVAIR Form 10126/1.

THIS PAGE INTENTIONALLY LEFT BLANK.

APPENDIX A

THE METRIC SYSTEM AND METRIC UNIT CONVERSION CHARTS

The Metric System simply and logically coordinates the measurements of length, area, volume, and mass into one decimalized system. United States currency, with its unexcelled convenience, was the first large scale national use of a decimal system. The ratio between the units of the series - dollars, dimes, cents, and mills - is ten. Additions and other numerical operations are simple. Calculations with metric units require no conversion from unit to unit, as for example between inches and feet or ounces and pounds.

In the Metric System there is one series of units for length, one for area, one for volume or capacity, one for mass, and one for temperature.

LENGTH - The common metric units of length are the millimeter (mm) for small dimensions, the centimeter (cm) for daily practical use, the meter (m) for expressing dimensions of larger objects and short distances and the kilometer (km) for longer distances. The centimeter is about four-tenths of an inch. The meter is about forty inches and the kilometer about six-tenths of a mile (figure A-1). When drawing to metric scale, engineering and product dimensions are in millimeters. Architectural drawings can be in millimeters or centimeters. On land surveys the unit is the meter. On maps the kilometer is the unit of measurement.

AREA - Small areas are usually measured in square centimeters (cm^2). In building and construction the square meter (m^2) is used and is about 20 percent larger than a square yard. The hectare (ha) is used for land surveys and is about 2.5 acres.

VOLUME - For volume the most convenient unit is the cubic decimeter (dm^3), referred to as the liter (l). The liter is slightly larger than the U.S. liquid quart but smaller than the U.S. dry quart and the British Imperial quart. The preferred unit for dispensing unit for dispensing drugs and for scientific work is the cubic centimeter (cm^3) or milliliter (ml) as it is also called. For measuring amounts of concrete and excavations the cubic meter (m^3) is used.

MASS - In pharmaceutical and scientific work the gram (g) is the most convenient unit. There are slightly less than 30 grams in one avoirdupois ounce. For most other uses the kilogram (kg) is convenient and is approximately 2.2 pounds. The metric ton (t), 1000 kg, is used for farm commodities, minerals, and large shipments. It is convenient that a liter of pure water at standard temperature and pressure has a mass of one kilogram (discrepancy less than one part in 10,000). This relationship makes it easy to determine the mass of any known volume of water, or of any other liquid if its specific gravity is known.

TEMPERATURE - All countries using the Metric System of weights and measures also use the Celsius (C) scale (formerly called centigrade) for ordinary measurement of temperature. On the Celsius scale pure water at standard atmospheric pressure freezes at 0 and boils at 100. Normal human body temperature is 37°, while a comfortable room temperature is about 22°. The preferred temperature scale for engineering and physics is the kelvin (K) which has the same units as the Celsius and where the freezing point of pure water is 273.15 K.

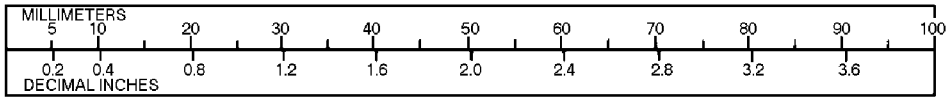

1 Millimeter = 0.03937 Inch Scale - 1 Centimeter = 5 Millimeters

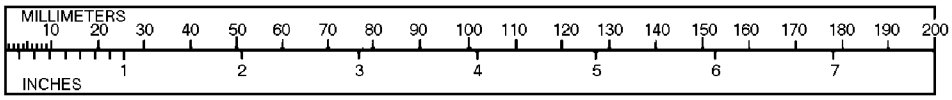

1 Inch = 25.4 Millimeters Scale - 1 Centimeter = 10 Millimeters

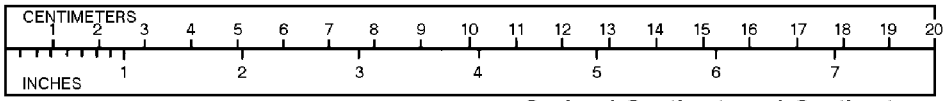

1 Centimeter = 0.39370 Inch Scale - 1 Centimeter = 1 Centimeters

1 Inch = 2.54 Centimeters

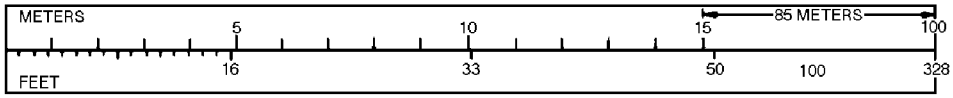

Scale - 1 Centimeter = 1 Meter 1 Foot = 0.3048 Meter

1 Meter = 3.28083 Feet (39.37 Inches - Act of Congress 1866)

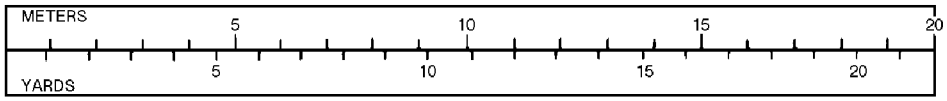

1 Meter = 1.09361 Yards 1 Yard = 0.9144 Meter Scale - 1 Centimeter = 1 Meter

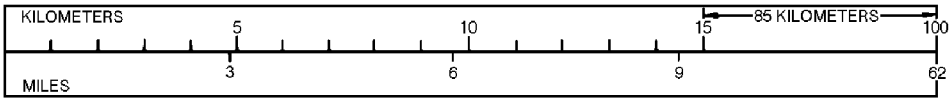

1 Kilometer = 0.62137 Mile Scale - 1 Centimeter = 1 Kilometer

Mile = 1.6093 Kilometers

1 Cubic Centimeter = 0.061 Cubic Inch Scale - 1 Centimeter = 1 Cubic Centimeter

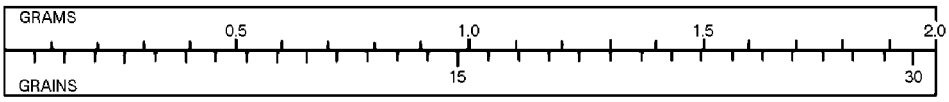

1 Gram = 15.4324 Grains Scale - 1 Centimeter = 0.1 Gram

A-1-1

Figure A-1. Reference Conversion Charts (Sheet 1 of 2)

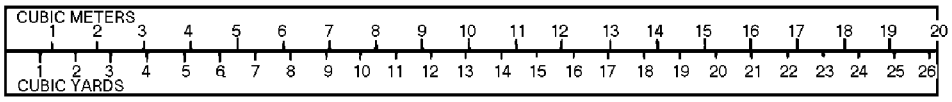

1 Cubic Meter = 1.30795 Cubic meter **Scale - 1 Centimeter = 1 Cubic Meter**

1 Cubic Yard = 0.76455 Cubic meter

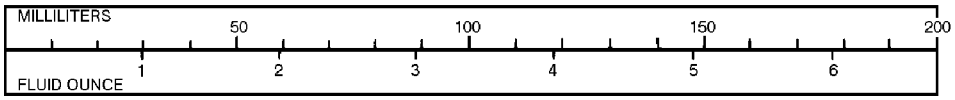

1 Milliliter = 0.03381 Fluid Ounce **Scale - 1 Centimeter = 10 Milliliter**

1 Fluid Ounce = 29.57 Milliliters

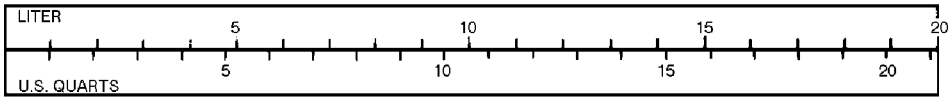

1 Liter = 1.0567 U.S. Quarts 1 U.S. Quart = 0.9463 Liter Scale - 1 Centimeter = 1 Liter

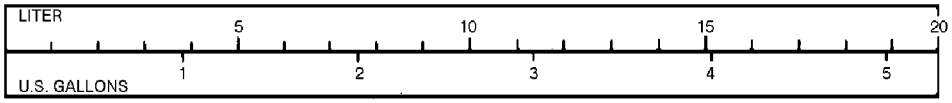

1 Liter = 0.26418 U.S. Gallon **Scale - 1 Centimeter = 1 Liter**

1 U.S. Gallon = 3.7853 Liters

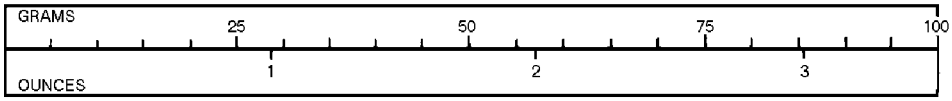

1 Avoirdupois ounce = 28.3495 Grams **Scale - 1 Centimeter = 5 Grams**

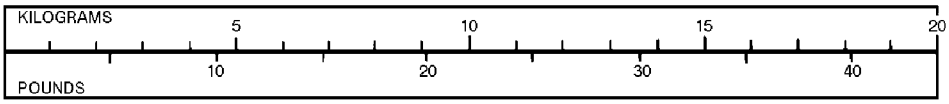

1 Kilogram = 2.2045 Pounds **Scale - 1 Centimeter = 1 Kilogram**

1 Pound = 0.45359 Kilogram

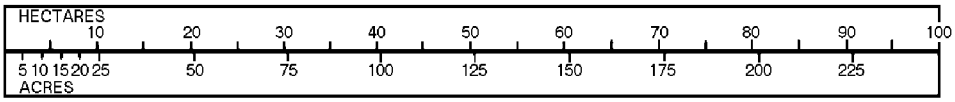

1 Hectare = 2.47105 Acres **Scale - 1 Centimeter = 5 Hectares**

1 Acres = 0.40489 Hectares **40 Acres = 16.19 Hectares**

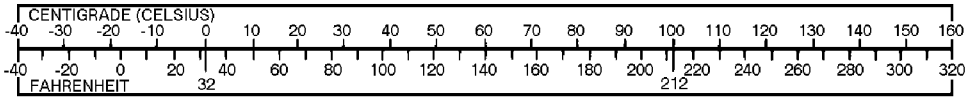

Fahrenheit = 9/5 Centigrade plus 32 **Scale - 1 Centigrade = 10° Centigrade**

Centigrade = Fahrenheit minus 32 x 5/9

A-1-2

Figure A-1. Reference Conversion Charts (Sheet 2 of 2)

Table A-1. Symbols and Relationships of Metric Units

Quantity	Unit (Note 1)	Symbol	Relationship of Units
Length	millimeter centimeter decimeter meter (Note 2) kilometer	mm cm dm m km	1 mm = 0.001 m 1 cm = 10 mm 1 dm = 10 cm 1 m = 100 cm 1 km = 1000 m
Area	square centimeter square decimeter square meter (Note 2) are hectare square kilometer	cm^2 dm^2 m^2 a ha km^2	1 cm^2 = 100 mm^2 1 dm^2 = 100 cm^2 1 m^2 = 100 dm^2 1 a = 100 m^2 1 ha = 100 a 1 km^2 = 100 ha
Volume	cubic centimeter millimeter cubic decimeter liter cubic meter (Note 2)	cm^3 ml dm^3 l m^3	1 cm^3 } = 0.001 l 1 ml 1 dm^3 } = 1000 ml 1 l 1 m^3 = 1000 l
Mass*	milligram gram kilogram (Note 2) metric ton	mg g kg t	1 mg = 0.001 g 1 g = 1000 mg 1 kg = 1000 g 1 t = 1000 kg

*Mass is the quantity of matter. Weight is a force Earth's attraction for a given mass. Generally the term mass is meant when we use weight.

Notes:
1. The three main units; meter, liter, and gram can be changed to more convenient sized units for specific purposes by means of several well known prefixes. Milli means 1/1000. Centi means 1/100. Deci means 1/10. Kilo means 1000. One merely learns the main units and the value of the most commonly used prefixes. The symbols for metric units are the same for single and plural amounts and are not followed by a period. Rates are usually shown by use of the slash as in m/s.
2. The underlined units in this table are basic or derived units of the International System of Units (SI).

Table A-2. Inches to Millimeters Conversion Chart

Inch	mm	Inch	mm	Inch	mm	Inch	mm	Inch	mm
.001	0.0254	.051	1.2954	.101	2.5654	.151	3.8354	.201	5.1054
.002	0.0508	.052	1.3208	.102	2.5908	.152	3.8608	.202	5.1308
.003	0.0762	.053	1.3462	.103	2.6162	.153	3.8862	.203	5.1562
.004	0.1016	.054	1.3716	.104	2.6416	.154	3.9116	.204	5.1816
.005	0.1270	.055	1.3970	.105	2.6670	.155	3.9370	.205	5.2070
.006	0.1524	.056	1.4224	.106	2.6924	.156	3.9624	.206	5.2324
.007	0.1778	.057	1.4478	.107	2.7178	.157	3.9878	.207	5.2578
.008	0.2032	.058	1.4732	.108	2.7432	.158	4.0132	.208	5.2832
.009	0.2286	.059	1.4986	.109	2.7686	.159	4.0386	.209	5.3086
.010	0.2540	.060	1.5240	.110	2.7940	.160	4.0640	.210	5.3340
.011	0.2794	.061	1.5494	.111	2.8194	.161	4.0894	.211	5.3594
.012	0.3048	.062	1.5748	.112	2.8448	.162	4.1148	.212	5.3848
.013	0.3302	.063	1.6002	.113	2.8702	.163	4.1402	.213	5.4102
.014	0.3556	.064	1.6256	.114	2.8956	.164	4.1656	.214	5.4356
.015	0.3810	.065	1.6510	.115	2.9210	.165	4.1910	.215	5.4610
.016	0.4064	.066	1.6764	.116	2.9464	.166	4.2164	.216	5.4864
.017	0.4318	.067	1.7018	.117	2.9718	.167	4.2418	.217	5.5118
.018	0.4572	.068	1.7272	.118	2.9972	.168	4.2672	.218	5.5372
.019	0.4826	.069	1.7526	.119	3.0226	.169	4.2926	.219	5.5626
.020	0.5080	.070	1.7780	.120	3.0480	.170	4.3180	.220	5.5880
.021	0.5334	.071	1.8034	.121	3.0734	.171	4.3434	.221	5.6134
.022	0.5588	.072	1.8288	.122	3.0988	.172	4.3688	.222	5.6388
.023	0.5842	.073	1.8542	.123	3.1242	.173	4.3942	.223	5.6642
.024	0.6096	.074	1.8796	.124	3.1496	.174	4.4196	.224	5.6896
.025	0.6350	.075	1.9050	.125	3.1750	.175	4.4450	.225	5.7150
.026	0.6604	.076	1.9304	.126	3.2004	.176	4.4704	.226	5.7404
.027	0.6858	.077	1.9558	.127	3.2258	.177	4.4958	.227	5.7658
.028	0.7112	.078	1.9812	.128	3.2512	.178	4.5212	.228	5.7912
.029	0.7366	.079	2.0066	.129	3.2766	.179	4.5466	.229	5.8166
.030	0.7620	.080	2.0320	.130	3.3020	.180	4.5720	.230	5.8420
.031	0.7874	.081	2.0574	.131	3.3274	.181	4.5974	.231	5.8674
.032	0.8128	.082	2.0828	.132	3.3528	.182	4.6228	.232	5.8928
.033	0.8382	.083	2.1082	.133	3.3782	.183	4.6482	.233	5.9182
.034	0.8636	.084	2.1336	.134	3.4036	.184	4.6736	.234	5.9436
.035	0.8890	.085	2.1590	.135	3.4290	.185	4.6990	.235	5.9690
.036	0.9144	.086	2.1844	.136	3.4544	.186	4.7244	.236	5.9944
.037	0.9398	.087	2.2098	.137	3.4798	.187	4.7498	.237	6.0198
.038	0.9652	.088	2.2352	.138	3.5052	.188	4.7752	.238	6.0452
.039	0.9906	.089	2.2606	.139	3.5306	.189	4.8006	.239	6.0706
.040	1.0160	.090	2.2860	.140	3.5560	.190	4.8260	.240	6.0960
.041	1.0414	.091	2.3114	.141	3.5814	.191	4.8514	.241	6.1214
.042	1.0668	.092	2.3368	.142	3.6068	.192	4.8768	.242	6.1468
.043	1.0922	.093	2.3622	.143	3.6322	.193	4.9022	.243	6.1722
.044	1.1176	.094	2.3876	.144	3.6576	.194	4.9276	.244	6.1976
.045	1.1430	.095	2.4130	.145	3.6830	.195	4.9530	.245	6.2230
.046	1.1684	.096	2.4384	.146	3.7084	.196	4.9784	.246	6.2484
.047	1.1938	.097	2.4638	.147	3.7338	.197	5.0038	.247	6.2738
.048	1.2192	.098	2.4892	.148	3.7592	.198	5.0292	.248	6.2992
.049	1.2446	.099	2.5146	.149	3.7846	.199	5.0546	.249	6.3246
.050	1.2700	.100	2.5400	.150	3.8100	.200	5.0800	.250	6.3500

Inch	mm	Inch	mm	Inch	mm	Inch	mm	Inch	mm
.251	6.3754	.301	7.6454	.351	8.9154	.401	10.1854	.451	11.4554
.252	6.4008	.302	7.6708	.352	8.9408	.402	10.2108	.452	11.4808
.253	6.4262	.303	7.6962	.353	8.9662	.403	10.2362	.453	11.5062
.254	6.4516	.304	7.7216	.354	8.9916	.404	10.2616	.454	11.5316
.255	6.4770	.305	7.7470	.355	9.0170	.405	10.2870	.455	11.5570
.256	6.5024	.306	7.7724	.356	9.0424	.406	10.3124	.456	11.5824
.257	6.5278	.307	7.7978	.357	9.0678	.407	10.3378	.457	11.6078
.258	6.5532	.308	7.8232	.358	9.0932	.408	10.3632	.458	11.6332
.259	6.5786	.309	7.8486	.359	9.1186	.409	10.3886	.459	11.6586
.260	6.6040	.310	7.8740	.360	9.1440	.410	10.4140	.460	11.6840
.261	6.6294	.311	7.8994	.361	9.1694	.411	10.4394	.461	11.7094
.262	6.6548	.312	7.9248	.362	9.1948	.412	10.4648	.462	11.7348
.263	6.6802	.313	7.9502	.363	9.2202	.413	10.4902	.463	11.7602
.264	6.7056	.314	7.9756	.364	9.2456	.414	10.5156	.464	11.7856
.265	6.7310	.315	8.0010	.365	9.2710	.415	10.5410	.465	11.8110
.266	6.7564	.316	8.0264	.366	9.2964	.416	10.5664	.466	11.8364
.267	6.7818	.317	8.0518	.367	9.3218	.417	10.5918	.467	11.8618
.268	6.8072	.318	8.0772	.368	9.3472	.418	10.6172	.468	11.8872
.269	6.8326	.319	8.1026	.369	9.3726	.419	10.6426	.469	11.9126
.270	6.8580	.320	8.1280	.370	9.3980	.420	10.6680	.470	11.9380
.271	6.8834	.321	8.1534	.371	9.4234	.421	10.6934	.471	11.9634
.272	6.9088	.322	8.1788	.372	9.4488	.422	10.7188	.472	11.9888
.273	6.9342	.323	8.2042	.373	9.4742	.423	10.7442	.473	12.0142
.274	6.9596	.324	8.2296	.374	9.4996	.424	10.7696	.474	12.0396
.275	6.9850	.325	8.2550	.375	9.5250	.425	10.7950	.475	12.0650
.276	7.0104	.326	8.2804	.376	9.5504	.426	10.8204	.476	12.0904
.277	7.0358	.327	8.3058	.377	9.5758	.427	10.8458	.477	12.1158
.278	7.0612	.328	8.3312	.378	9.6012	.428	10.8712	.478	12.1412
.279	7.0366	.329	8.3566	.379	9.6266	.429	10.8966	.479	12.1666
.280	7.1120	.330	8.3820	.380	9.6520	.430	10.9220	.480	12.1920
.281	7.1374	.331	8.4074	.381	9.6774	.431	10.9474	.481	12.2174
.282	7.1628	.332	8.4328	.382	9.7028	.432	10.9728	.482	12.2428
.283	7.1882	.333	8.4582	.383	9.7282	.433	10.9982	.483	12.2682
.284	7.2136	.334	8.4836	.384	9.7536	.434	11.0236	.484	12.2936
.285	7.2390	.335	8.5090	.385	9.7790	.435	11.0490	.485	12.3190
.286	7.2644	.336	8.5344	.386	9.8044	.436	11.0744	.486	12.3444
.287	7.2898	.337	8.5598	.387	9.8298	.437	11.0998	.487	12.3698
.288	7.3152	.338	8.5852	.388	9.8552	.438	11.1252	.488	12.3952
.289	7.3406	.339	8.6106	.389	9.8806	.439	11.1506	.489	12.4206
.290	7.3660	.340	8.6360	.390	9.9060	.440	11.1760	.490	12.4460
.291	7.3914	.341	8.6614	.391	9.9314	.441	11.2014	.491	12.4714
.292	7.4168	.342	8.6868	.392	9.9568	.442	11.2268	.492	12.4968
.293	7.4422	.343	8.7122	.393	9.9822	.443	11.2522	.493	12.5222
.294	7.4676	.344	8.7376	.394	10.0076	.444	11.2776	.494	12.5476
.295	7.4930	.345	8.7630	.395	10.0330	.445	11.3030	.495	12.5730
.296	7.5184	.346	8.7884	.396	10.0584	.446	11.3284	.496	12.5984
.297	7.5438	.347	8.8138	.397	10.0838	.447	11.3538	.497	12.6238
.298	7.5692	.348	8.8392	.398	10.1092	.448	11.3792	.498	12.6492
.299	7.5946	.349	8.8646	.399	10.1346	.449	11.4046	.499	12.6746
.300	7.6200	.350	8.8900	.400	10.1600	.450	11.4300	.500	12.7000

Table A-3. International System of Units (SI)

Quantity	Unit	Symbol
Elemental units		
Length	meter	m
Mass	kilogram	kg
Time	second	s
Electric current	ampere	A
Temperature	degree Kelvin	°K
Luminous intensity	candela	cd
Supplementary units		
Plane angle	radian	rad
Solid angle	steradian	sr
Derived units		
Area	square meter	m^2
Volume	cubic meter	m^3
Frequency	hertz	Hz (s^{-1})
Density	kilogram per cubic meter	kg/m^3
Velocity	meter per second	m/s
Angular velocity	radian per second	rad/s
Acceleration	meter per second squared	m/s^2
Angular acceleration	radian per second squared	rad/s^2
Force	newton	N (kg m/s^2)
Pressure	newton per square meter	N/m^2
Kinematic viscosity	square meter per second	m^2/s
Dynamic viscosity	newton-second per square meter	N s/m^2
Work, energy, quantity of heat	joule	J (N m)
Power	watt	W (J/s)
Electric charge	coulomb	C (A s)
Voltage, potential difference, electrotive force	volt	V (W/A)
Electric field strength	volt per meter	V/m
Electric resistance	ohm	Ω (V/A)
Electric capacitance	farad	F (A s/V)
Magnetic flux	weber	Wb (V s)
Inductance	henry	H (V s/A)
Magnetic flux density	tesla	T (Wb/m^2)
Magnetic field strength	ampere per meter	A/m
Magnetomotive force	ampere	A
Luminous flux	lumen	lm (cd sr)
Luminance	candela per square meter	cd/m^2
Illumination	lux	lx (lm/m^2)

USE OF TABLES

Following are step by step directions for the solution to an example conversion problem. The example is: Convert 12 3/4 inches to centimeters.

1. Convert all fractions to decimals. (Refer to table A-4.)

   12 3/4 = 12.75

2. Refer to table A-5 and find the column for the unit which you have. This would be the column labeled "INCHES" in the "Length" table.

3. Locate the numeral 1 in the column labeled "INCHES."

4. Locate the column labeled "CENTIMETERS."

5. Read the number in the CENTIMETERS column that is in direct line with the numeral 1 located in the INCHES column.

   Read 2.540

6. Multiply the number of inches of this example by the conversion factor to obtain the number of centimeters.

   2.540 times 12.75 equals 32.385

7. Round off the answer to not over four significant figures (four numbers counting from the first non-zero number on the left. Fewer significant figures may be used depending on the accuracy of measurement and the tolerances allowed. For most work in this manual, centimeters would be expressed as three significant figures.

   12 3/4 inches = 32.4 centimeters

Table A-4. Fraction/Decimal/Millimeter Conversion Chart

Fractions	Dec Equiv	MM Equiv	Fractions	Dec Equiv	MM Equiv
1/64	0.01562	0.397	33/64	0.515625	13.097
1/32	0.03125	0.794	17/32	0.53125	13.494
3/64	0.04688	1.191	35/64	0.546875	13.891
1/16	0.0625	1.588	9/16	0.5625	14.288
5/64	0.078125	1.984	37/64	0.578125	14.684
3/32	0.09375	2.381	19/32	0.59375	15.081
7/64	0.109375	2.778	39/64	0.609375	15.478
1/8	0.125	3.175	5/8	0.625	15.875
9/64	0.140625	3.572	41/64	0.640625	16.272
5/32	0.15625	3.969	21/32	0.65625	16.669
11/64	0.171875	4.366	43/64	0.671875	17.066
3/16	0.1875	4.762	11/16	0.6875	17.462
13/64	0.203125	5.159	45/64	0.703125	17.859
7/32	0.21875	5.556	23/32	0.71875	18.256
15/64	0.234375	5.953	47/64	0.734375	18.653
1/4	0.25	6.350	3/4	0.75	19.050
17/64	0.265625	6.747	49/64	0.765625	19.447
9/32	0.28/125	7.144	25/32	0.78125	19.844
19/64	0.296875	7.541	51/64	0.796875	20.241
5/16	0.3125	7.938	13/16	0.8125	20.638
21/64	0.328125	8.334	53/64	0.828125	21.034
11/32	0.34375	8.731	27/32	0.84375	21.431
23/64	0.359375	9.128	55/64	0.859375	21.828
3/8	0.375	9.525	7/8	0.875	22.225
25/64	0.390625	9.922	57/64	0.890625	22.622
13/32	0.40625	10.319	29/32	0.90625	23.019
27/64	0.421875	10.716	59/64	0.921875	23.416
7/16	0.4375	11.112	15/16	0.9375	23.812
29/64	0.453125	11.509	61/64	0.953125	24.209
15/32	0.46875	11.906	31/32	0.96875	24.606
31/64	0.484375	12.303	63/64	0.984375	25.003
1/2	0.5	12.700	1	1.0	25.400

Table A-5. Metric Unit Conversions

Length

Millimeters	Centimeters	Inches	Feet	Yards	Meters
1.0	0.1000	0.03937	0.003281	0.001094	0.001000
10.0	1.0	0.3937	0.03281	0.01094	0.01000
25.40	2.540	1.0	0.08333	0.02778	0.0254
304.8	30.48	12.0	1.0	0.3333	0.3048
914.4	91.44	36.0	3.000	1.0	0.9144
1000.0	100.0	39.37	3.281	1.094	1.0

Weight

Grams	Kilograms	Grains	Ounces Avoirdupois	Pounds Avoirdupois
1000.0	1.0	15,432.0	35.27	2.205
1.0	0.0010	15,432	0.03527	0.002205
0.06480	0.00006480	1.0	0.002286	0.0001429
28.35	0.02835	437.5	1.0	0.0625
453.6	0.4536	7,000.0	16.0	1.0

Velocity

Meters/Sec	Kilometers/Hr	Feet/Sec	Miles/Hr	Knots
1.0	3.600	3.281	2.237	1.944
0.2778	1.0	0.9113	0.6214	0.5400
0.3048	1.097	1.0	0.6818	0.5925
0.4470	1.609	1.467	1.0	0.8690
0.5144	1.852	1.688	1.1511	1.0

Pressure

Bars (Mega-baryes)	Kilograms/ square cm	Pounds/ square inch	Atmos-pheres	Columns of Mercury (0°C) Meters	Columns of Mercury (0°C) Inches	Columns of Water (15°C) Meters	Columns of Water (15°C) Inches	Columns of Water (15°C) Feet
1.0	1.0197	14.50	0.9869	0.7501	29.53	10.21	401.8	33.49
0.9807	1.0	14.22	0.9678	0.7356	28.96	10.01	394.1	32.84
0.06895	0.07031	1.0	0.06805	0.05171	2.036	0.7037	27.70	2.309
1.0133	1.0332	14.70	1.0	0.7600	29.92	10.34	407.1	33.93
1.3332	1.3595	19.34	1.316	1.0	39.37	13.61	535.7	44.64
0.03386	0.03453	0.4912	0.03342	0.02540	1.0	0.3456	13.61	1.134
0.09798	0.09991	1.421	0.09670	0.07349	2.893	1.0	39.37	3.281
0.002489	0.002538	0.03609	0.002456	0.001867	0.0739	0.02540	1.0	0.08333
0.02986	0.03045	0.4331	0.02947	0.02240	0.8819	0.3048	12.0	1.0

Area

Square Meters	Square Centimeters	Square Inches	Square Feet	Square Yards
1.0	10,000.0	1,550.0	10.76	1.196
0.0001	1.0	0.1550	0.001076	0.0001196
0.0006452	6,452.0	1.0	0.006944	0.0007716
0.9290	929.0	144.0	1.0	0.1111
0.8361	8,361.0	1,296.0	9.0000	1.0

Volume

Cubic Inches	Cubic Feet	Cubic Yards	Gallons (U.S.)	Quarts (U.S.)	Liters (Cubic Decimeters)	Cubic Meters	Milliliters (Cubic Centimeters)
1.0	0.0005787	0.00002143	0.004329	0.01732	0.01639	0.00001639	16.39
1,728.0	1.0	0.03704	7.481	29.92	28.32	0.02832	28,320
46,656.0	27.0	1.0	202.2	807.9	764.6	0.7646	764,600
231.0	0.1337	0.004951	1.0	4.000	3.785	0.003785	3,785
57.75	0.03342	0.001238	0.2500	1.0	0.9464	0.0009464	946.4
61.02	0.03531	0.001308	0.2642	1.057	1.0	0.001	1,000
61020	353.1	1.308	264.2	1057	1000.0	1	1,000,000
0.06102	0.00003531	0.000001308	0.0002642	0.001057	0.001	0.000001	1

Table A-6. Alphabetical Index of Metric Unit Conversions

TO CONVERT	INTO	MULTIPLY BY
A		
Abcoulomb	Statcoulombs	2.998×10^{10}
Acre	sq chain (Gunters)	10
Acre	Rods	160
Acre	Square links (Gunters)	1×10^{5}
Acre	Hectare or sq hectometer	0.4047
acres	sq feet	43,560.0
acres	sq meters	4,047.
acres	sq miles	1.562×10^{-3}
acres	sq yards	4,840.
acre-feet	cu feet	43,560.0
acre-feet	gallons	3.259×10^{4}
amperes/sq cm	amps/sq in	6.452
amperes/sq cm	amps/sq meter	10^{4}
amperes/sq in	amps/sq cm	0.1550
amperes/sq in	amps/sq meter	1,550.0
amperes/sq meter	amps/sq cm	10^{-4}
amperes/sq meter	amps/sq in	6.452×10^{-4}
ampere-hours	coulombs	3,600.0
ampere-hours	faradays	0.03731
ampere-turns	gilberts	1.257
ampere turns/cm	amp-turns/in	2.540
ampere-turns/cm	amp-turns/meter	100.0
ampere-turns/cm	gilberts/cm	1.257
ampere-turns/in	amp-turns/cm	0.3937
ampere-turns/in	amp-turns/meter	39.37
ampere-turns/in	gilberts/cm	0.4950
ampere-turns/meter	amp/turns/cm	0.01
ampere-turns/meter	amp-turns/in	0.0254
ampere-turns/meter	gilberts/cm	0.01257
Angstrom unit	Inch	3937×10^{-9}
Angstrom unit	Meter	1×10^{-10}
Angstrom unit	Micron or (Mu)	1×10^{-4}
Are	Acre (US)	0.02471
Ares	sq yards	119.60
ares	acres	0.02471
ares	sq meters	100.0
Astronomical Unit	Kilometers	1.495×10^{8}
Atmospheres	Ton/sq inch	0.007348
atmospheres	cms of mercury	76.0
atmospheres	ft of water (at 4°C)	33.90
atmospheres	in of mercury (at 0°C)	29.92
atmospheres	kgs/sq cm	1.0333
atmospheres	kgs/sq meter	10,332
atmospheres	pounds/sq in	14.70
atmospheres	tons/sq ft	1.058
B		
Barrels (US, dry)	cu inches	7056.0
Barrels (US, dry)	quarts (dry)	105.0
Barrels (US, liquid)	gallons	31.5
barrels (oil)	gallons (oil)	42.0
bars	atmospheres	0.9869
bars	dynes/sq cm	10^{4}
bars	kgs/sq meter	1.020×10^{4}
bars	pounds/sq ft	2,089.0
bars	pounds/sq in	14.50
B (Cont)		
Baryl	Dyne/sq cm	1.000
Bolt (US Cloth)	Meters	36.576
BTU	Liter-Atmosphere	10.409
Btu	ergs	1.0550×10^{10}
Btu	foot-lbs	778.3
Btu	gram-calories	252.0
Btu	horsepower-hrs	3.931×10^{-4}
Btu	joules	1,054.8
Btu	kilogram-calories	0.2520
Btu	kilogram-meters	107.5
Btu	kilowatt-hrs	2.928×10^{-4}
Btu/hr	foot-pounds/sec	0.2162
Btu/hr	gram-cal/sec	0.0700
Btu/hr	horsepower-hrs	3.929×10^{-4}
Btu/hr	watts	0.2931
Btu/min	foot-lbs/sec	12.96
Btu/min	horsepower	0.02356
Btu/min	kilowatts	0.01757
Btu/min	watts	17.57
Btu/sq ft/min	watts/sq in	0.1221
Bucket (Br dry)	Cubic Cm	1.818×10^{4}
bushels	cu ft	1.2445
bushels	cu in	2,150.4
bushels	cu meters	0.03524
bushels	liters	35.24
bushels	pecks	4.0
bushels	pints (dry)	64.0
bushels	quarts (dry)	32.0
C		
Calories, gram(mean)	BTU (mean)	3.9685×10^{-3}
Candle/sq cm	Lamberts	3.142
Candle/sq inch	Lamberts	0.4870
Centares (centiares)	sq meters	1.0
Centigrade	Fahrenheit	(C° X 9/5) + 32
centigrams	grams	0.01
Centiliter	Ounce fluid (US)	0.3382
Centiliter	Cubic inch	0.6103
Centiliter	drams	2.705
centiliters	liters	0.01
centimeters	feet	3.281×10^{-2}
centimeters	inches	0.3937
centimeters	kilometers	10^{-5}
centimeters	meters	0.01
centimeters	miles	6.214×10^{-8}
centimeters	millimeters	10.0
centimeters	mils	393.7
centimeters	yards	1.024×10^{-2}
centimeter-dynes	cm-grams	1.020×10^{-3}
centimeter-dynes	meter-kgs	1.020×10^{-8}
centimeter-dynes	pound-feet	7.376×10^{-8}
centimeter-grams	cm-dynes	980.7
centimeter-grams	meter-kgs	10^{-5}
centimeter-grams	pound-feet	7.233×10^{-5}
centimeters of mercury	atmospheres	0.01316
centimeters of mercury	feet of water	0.4461
centimeters of mercury	kgs/sq meter	136.0

Table A-6. Alphabetical Index of Metric Unit Conversions (Cont)

TO CONVERT	INTO	MULTIPLY BY
C (Cont)		
centimeters of mercury	pounds/sq ft	27.85
centimeters of mercury	pounds/sq in	0.1934
centimeters/sec	feet/min	1.1969
centimeters/sec	feet/sec	0.03281
centimeters/sec	kilometers/hr	0.036
centimeters/sec	knots	0.1943
centimeters/sec	miles/hr	0.02237
centimeters/sec	miles/min	3.728×10^{-4}
centimeters/sec/sec	feet/sec/sec	0.03281
centimeters/sec/sec	kms/hr/sec	0.036
centimeters/sec/sec	meters/sec/sec	0.01
centimeters/sec/sec	miles/hr/sec	0.02237
Chain	Inches	792.00
Chain	meters	20.12
Chains (surveyors' or Gunter's)	yards	22.00
circular mils	sq cms	5.067×10^{-6}
circular mils	sq mils	0.7854
Circumference	Radians	6.283
circular mils	sq inches	7.854×10^{-7}
Cords	cord feet	8
Cord feet	cu feet	16
Coulomb	Statcoulombs	2.998×10^{9}
coulombs	faradays	1.036×10^{-5}
coulombs/sq cm	coulombs/sq in	64.52
coulombs/sq cm	coulombs/sq meter	10^{4}
coulombs/sq in	coulombs/sq cm	0.1550
coulombs/sq in	coulombs/sq meter	1,550.0
coulombs/sq meter	coulombs/sq cm	10
coulombs/sq meter	coulombs/sq in	6.452×10^{-4}
cubic centimeters	cu feet	3.531×10^{-5}
cubic centimeters	cu inches	0.06102
cubic centimeters	cu meters	10^{-6}
cubic centimeters	cu yards	1.308×10^{-6}
cubic centimeters	gallons (US liq)	2.642×10^{-4}
cubic centimeters	liters	0.001
cubic centimeters	pints (US liq)	2.113×10^{-3}
cubic centimeters	quarts (US liq)	1.057×10^{-3}
cubic feet	bushels (dry)	0.8036
cubic feet	cu cms	28,320.0
cubic feet	cu inches	1,728.0
cubic feet	cu meters	0.02832
cubic feet	cu yards	0.03704
cubic feet	gallons (US liq)	7.48052
cubic feet	liters	28.32
cubic feet	pints (US liq)	59.84
cubic feet	quarts (US liq)	29.92
cubic feet/min	cu cms/sec	472.0
cubic feet/min	gallons/sec	0.1247
cubic feet/min	liters/sec	0.4720
cubic feet/min	pounds of water/min	62.43
cubic feet/sec	million gals/day	0.646317
cubic feet/sec	gallons/min	448.831
cubic inches	cu cms	16.39
cubic inches	cu feet	5.787×10^{-4}
cubic inches	cu meters	1.639×10^{-5}
cubic inches	cu yards	2.143×10^{-5}
C (Cont)		
cubic inches	gallons	4.329×10^{-3}
cubic inches	liters	0.01639
cubic inches	mil-feet	1.061×10^{5}
cubic inches	pints (US liq)	0.03463
cubic inches	quarts (US liq)	0.01732
cubic meters	bushels (dry)	28.38
cubic inches	cu yards	2.143×10^{-5}
cubic meters	cu cms	10^{4}
cubic meters	cu feet	35.31
cubic meters	cu inches	61,023.0
cubic meters	cu yards	1.308
cubic meters	gallons (US liq)	264.2
cubic meters	liters	1,000.0
cubic meters	pints (US liq)	2,113.0
cubic meters	quarts (US liq)	1,057.0
cubic yards	cu cms	7.646×10^{5}
cubic yards	cu feet	27.0
cubic yards	cu inches	46,656.0
cubic yards	cu meters	0.7646
cubic yards	gallons (US liq)	202.0
cubic yards	liters	764.6
cubic yards	pints (US liq)	1,615.9
cubic yards	quarts (US liq)	807.9
cubic yards/min	cubic ft/sec	0.45
cubic yards/min	gallons/sec	3.367
cubic yards/min	liters/sec	12.74
D		
Dalton	Gram	1.650×10^{-24}
days	seconds	86,400.0
decigrams	grams	0.1
deciliters	liters	0.1
decimeters	meters	0.1
degrees (angle)	quadrants	0.01111
degrees (angle)	radians	0.01745
degrees (angle)	seconds	3,600.0
degrees/sec	radians/sec	0.01745
degrees/sec	revolutions/min	0.1667
degrees/sec	revolutions/sec	2.778×10^{-3}
dekagrams	grams	10.0
dekaliters	liters	10.0
dekameters	meters	10.0
Drams (apothecaries' or troy)	ounces (avoirdupois)	0.1371429
Drams (apothecaries' or troy)	ounces (troy)	0.125
Drams (US, fluid or apoth)	cubic cm	3.6967
drams	grams	1.7718
drams	grains	27.3437
drams	ounces	0.0625
Dyne/cm	Erg/sq millimeter	0.01
Dyne/sq cm	Atmospheres	9.869×10^{-7}
Dyne/sq cm	Inch of Mercury at 0°C	2.953×10^{-5}
Dyne/sq cm	Inch of Water at 4°C	4.015×10^{-4}
dynes	grams	1.020×10^{-3}
dynes	joules/cm	10^{-7}
dynes	joules/meter (newtons)	10^{-5}

Table A-6. Alphabetical Index of Metric Unit Conversions (Cont)

TO CONVERT	INTO	MULTIPLY BY
	D (Cont)	
dynes	kilograms	1.020×10^{-6}
dynes	poundals	7.233×10^{-5}
dynes	pounds	2.248×10^{-6}
dynes/sq cm	bars	10^{-6}
	E	
Ell	Cm	114.30
Ell	Inches	45
Em, Pica	Inch	0.167
Em, Pica	Cm	0.4233
Erg/sec	Dyne - cm/sec	1.000
ergs	Btu	9.480×10^{-11}
ergs	dyne-centimeters	1.0
ergs	foot-pounds	7.367×10^{-8}
ergs	gram-calories	0.2389×10^{-7}
ergs	gram-cms	1.020×10^{-3}
ergs	horsepower-hrs	3.7250×10^{-14}
	E (Cont)	
ergs	joules	10^{-7}
ergs	kg-calories	2.389×10^{-11}
ergs	kg-meters	1.020×10^{-8}
ergs	kilowatt-hrs	0.2778×10^{-13}
ergs	watt-hours	0.2778×10^{-18}
ergs/sec	Btu/min	5.688×10^{-6}
ergs/sec	ft-lbs/min	4.427×10^{-6}
ergs/sec	ft-lbs/sec	7.3756×10^{-8}
ergs/sec	horsepower	1.341×10^{-10}
ergs/sec	kg-calories/min	1.433×10^{-9}
ergs/sec	kilowatts	10^{-10}
	F	
farads	microfarads	10^{6}
Faraday/sec	Ampere (absolute)	9.6500×10^{4}
faradays	ampere-hours	26.80
faradays	coulombs	9.649×10^{4}
Fathom	Meter	1.828804
fathoms	feet	6.0
feet	centimeters	30.48
feet	kilometers	3.048×10^{-4}
feet	meters	0.3048
feet	miles (naut)	1.645×10^{-4}
feet	miles (stat)	1.894×10^{-4}
feet	millimeters	304.8
feet	mils	1.2×10^{4}
feet of water	atmospheres	0.02950
feet of water	in of mercury	0.8826
feet of water	kgs/sq cm	0.03048
feet of water	kgs/sq meter	304.8
feet of water	pounds/sq ft	62.43
feet of water	pounds/sq in	0.4335
feet/min	cms/sec	0.5080
feet/min	feet/sec	0.01667
feet/min	kms/hr	0.01829
feet/min	meters/min	0.3048
feet/min	miles/hr	0.01136
feet/sec	cms/sec	30.48
	F (Cont)	
feet/sec	kms/hr	1.097
feet/sec	knots	0.5921
feet/sec	meters/min	18.29
feet/sec	miles/hr	0.6818
feet/sec	miles/min	0.01136
feet/sec	cms/sec	30.48
feet/sec/sec	cms/sec/sec	30.48
feet/sec/sec	kms/hr/sec	1.097
feet/sec/sec	meters/sec/sec	0.3048
feet/sec/sec	miles/hr/sec	0.6818
feet/100 feet	per cent grade	1.0
Foot - candle	Lumen/sq meter	10.764
foot-pounds	Btu	1.286×10^{-3}
foot-pounds	ergs	1.356×10^{7}
foot-pounds	gram-calories	0.3238
foot-pounds	hp-hrs	5.050×10^{-7}
foot-pounds	joules	1.356
foot-pounds	kg-calories	3.24×10^{-4}
foot-pounds	kg-meters	0.1383
foot-pounds	kilowatt-hrs	3.766×10^{-7}
foot-pounds/min	Btu/min	1.286×10^{-3}
foot-pounds/min	foot-pounds/sec	0.01667
foot-pounds/min	horsepower	3.030×10^{-5}
foot-pounds/min	kg-calories/min	3.24×10^{-4}
foot-pounds/min	kilowatts	2.260×10^{-5}
foot-pounds/sec	Btu/hr	4.6263
foot-pounds/sec	Btu/min	0.07717
foot-pounds/sec	horsepower	1.818×10^{-3}
foot-pounds/sec	kg-calories/min	0.01945
foot-pounds/sec	kilowatts	1.356×10^{-3}
Furlongs	miles (US)	0.125
furlongs	rods	40.0
furlongs	feet	660.0
	G	
gallons	cu cms	3,785.0
gallons	cu feet	0.1337
gallons	cu inches	231.0
gallons	cu meters	3.785×10^{-3}
gallons	cu yards	4.951×10^{-3}
gallons	liters	3.785
gallons (liq Br Imp)	gallons (US liq)	1.20095
gallons (US)	gallons (Imp)	0.83267
gallons of water	pounds of water	8.3453
gallons/min	cu ft/sec	2.228×10^{-3}
gallons/min	liters/sec	0.06308
gallons/min	cu ft/hr	8.0208
gausses	lines/sq in	6.452
gausses	webers/sq cm	10^{-8}
gausses	webers/sq in	6.452×10^{-8}
gausses	webers/sq meter	10^{-4}
gilberts	ampere-turns	0.7958
gilberts/cm	amp-turns/cm	0.7958
gilberts/cm	amp-turns/in	2.021
gilberts/cm	amp-turns/meter	79.58
Gills (British)	cubic cm	142.07
gills	liters	0.1183
gills	pints (liq)	0.25

Table A-6. Alphabetical Index of Metric Unit Conversions (Cont)

TO CONVERT	INTO	MULTIPLY BY
G (Cont)		
Grade	Radian	0.01571
Grains	drams (avoirdupois)	0.03657143
grains (troy)	grains (avdp)	1.0
grains (troy)	grams	0.06480
grains (troy)	ounces (avdp)	2.0833×10^{-3}
grains (troy)	pennyweight (troy)	0.04167
grains/US gal	parts/million	17.118
grains/US gal	pounds/million gal	142.86
grains/Imp gal	parts/million	14.286
grams	dynes	980.7
grams	grains	15.43
grams	joules/cm	9.807×10^{-5}
grams	joules/meter (newtons)	$9,807 \times 10^{-3}$
grams	kilograms	0.001
grams	milligrams	1.000.0
grams	ounces (avdp)	0.03527
grams	ounces (troy)	0.03215
grams	poundals	0.07093
grams	pounds	2.205×10^{-3}
grams/cm	pounds/inch	5.600×10^{-3}
grams/cu cm	pounds/cu ft	62.43
grams/cu cm	pounds/cu in	0.03613
grams/cu cm	pounds/mil-foot	3.405×10^{-7}
grams/liter	grains/gal	58.417
grams/liter	pounds/1.000 gal	8.345
grams/liter	pounds/cu ft	0.062427
grams/liter	parts/million	1,000.0
grams/sq cm	pounds/sq ft	2.0481
gram-calories	Btu	3.9683×10^{-3}
gram-calories	ergs	4.1868×10^{7}
gram-calories	foot-pounds	3.0880
gram-calories	horsepower-hrs	1.5596×10^{-6}
gram-calories	kilowatt-hrs	1.1630×10^{-6}
gram-calories	watt-hrs	1.1630×10^{-3}
grams-calories/sec	Btu/hr	14.286
gram-centimeters	Btu	9.297×10^{-8}
gram-centimeters	ergs	980.7
gram-centimeters	joules	9.807×10^{-5}
gram-centimeters	kg-cal	2.343×10^{-8}
gram-centimeters	kg-meters	10^{-5}
H		
Hand	Cm	10.16
hetacres	acres	2.471
hectares	sq feet	1.076×10^{5}
hectograms	grams	100.0
hectoliters	liters	100.0
hectometers	meters	100.0
hectowatts	watts	100.0
henries	millihenries	1,000.0
Hogsheads (British)	cubic ft	10.114
Hogsheads (US)	cubic ft	8.42184
Hogsheads (US)	gallons (US)	63
horsepower	Btu/min	42.44
horsepower	foot-lbs/min	33,000.0
horsepower	foot-lbs/sec	550.0
horsepower (metric) (542.5 ft lb/sec)	horsepower (550 ft lb/sec)	0.9863
H (Cont)		
horsepower (550 ft lb/sec)	horsepower (metric) (542.5 ft lb/sec)	1.014
horsepower	kg-calories/min	10.68
horsepower	kilowatts	0.7457
horsepower	watts	745.7
horsepower (boiler)	Btu/hr	33.479
horsepower (boiler)	kilowatts	9.803
horsepower-hrs	Btu	2,547.0
horsepower-hrs	ergs	2.6845×10^{13}
horsepower-hrs	foot-lbs	1.98×10^{4}
horsepower-hrs	gram-calories	641,190.0
horsepower-hrs	joules	2.684×10^{4}
horsepower-hrs	kg-calories	641.1
horsepower-hrs	kg-meters	2.737×10^{5}
horsepower-hrs	kilowatts-hrs	0.7457
hours	days	4.167×10^{-2}
hours	weeks	5.952×10^{-3}
Hundredweights (long)	pounds	112
Hundredweights (long)	tons (long)	0.05
Hundredweights (short)	ounces (avoirdupois)	1600
Hundredweights (short)	pounds	100
Hundredweights (short)	tons (metric)	0.0453592
Hundredweights (short)	tons (long)	0.0446429
I		
inches	centimeters	2.540
inches	meters	2.540×10^{-2}
inches	miles	1.578×10^{-5}
inches	millimeters	25.40
inches	mils	1,000.0
inches	yards	2.778×10^{-2}
inches of mercury	atmospheres	0.03342
inches of mercury	feet of water	1.133
inches of mercury	kgs/sq cm	0303453
inches of mercury	kgs sq meter	345.3
inches of mercury	pounds/sq ft	70.73
inches of mercury	pounds/sq in	0.4912
inches of water (at 4°C)	atmospheres	2.458×10^{-3}
inches of water (at 4°C)	inches of mercury	0.07355
inches of water (at 4°C)	kgs/sq cm	2.540×10^{-3}
inches of water (at 4°C)	ounces/sq in	0.5781
inches of water (at 4°C)	pounds/sq ft	5.204
inches of water (at 4°C)	pounds/sq in	0.03613
International Ampere	Ampere (absolute)	0.9998
International Volt	Volts (absolute)	1.0003
International volt	Joules (absolute)	$1\text{-}593 \times 10^{-19}$
International volt	Joules	9.654×10^{4}
J		
joules	Btu	9.480×10^{-4}
joules	ergs	10^{7}
joules	foot-pounds	0.7376
joules	kg calories	2.389×10^{-4}
joules	kg-meters	0.1020
joules	watt-hrs	2.778×10^{-4}
joules/cm	grams	1.020×10^{4}
joules/cm	dynes	10^{7}

Table A-6. Alphabetical Index of Metric Unit Conversions (Cont)

TO CONVERT	INTO	MULTIPLY BY
	J (Cont)	
joules/cm	joules/meter (newtons)	100.0
joules/cm	poundals	723.3
joules/cm	pounds	22.48
	K	
kilograms	dynes	980,665.0
kilograms	grams	1,000.0
kilograms	joules/cm	0.09807
kilograms	joules/meter (newtons)	9.807
kilograms	poundals	70.93
kilograms	pounds	2.205
kilograms	tons (long)	9.842×10^{-4}
kilograms	tons (short)	1.102×10^{-3}
kilograms/cu meter	grams/cu cm	0.001
kilograms/cu meter	pounds/cu ft	0.06243
kilograms/cu meter	pounds/cu in	3.613×10^{-5}
kilograms/cu meter	pounds/mil-foot	3.405×10^{-10}
kilograms/meter	pounds/ft	0.6720
Kilogram/sq cm	Dynes	980,665
kilograms/sq cm	atmospheres	0.9678
kilograms/sq cm	feet of water	32.81
kilograms/sq cm	inches of mercury	28.96
kilograms/sq cm	pounds/sq ft	2,048.0
kilograms/sq cm	pounds/sq in	14.22
kilograms/sq meter	atmospheres	9.678×10^{-5}
kilograms/sq meter	bars	98.07×10^{-6}
kilograms/sq meter	feet of water	3.281×10^{-3}
kilograms/sq meter	inches of mercury	2.896×10^{-3}
kilograms/sq meter	pounds/sq ft	0.2048
kilograms/sq meter	pounds/sq in	1.422×10^{-3}
kilograms/sq mm	kgs/sq meter	10^6
kilogram-calories	Btu	3.968
kilogram-calories	foot-pounds	3,088
kilogram-calories	hp-hrs	1.560×10^{-3}
kilogram-calories	joules	4,186
kilogram-calories	kg-meters	426.9
kilogram-calories	kilojoules	4.186
kilogram-calories	kilowatt-hrs	1.163×10^{-3}
kilogram meters	Btu	9.294×10^{-3}
kilogram meters	ergs	9.804×10^7
kilogram meters	foot-pounds	7.233
kilogram meters	joules	9.804
kilogram meters	kg-calories	2.342×10^{-3}
kilogram meters	kilowatt-hrs	2.723×10^{-6}
kilolines	maxwells	1,000.0
kiloliters	liters	1,000.0
kilometers	centimeters	10^5
kilometers	feet	3,281.0
kilometers	inches	3.937×10^4
kilometers	meters	1,000.0
kilometers	miles	0.6214
kilometers	millimeters	10^6
kilometers	yards	1,094.0
kilometers/hr	cms/sec	27.78
kilometers/hr	feet/min	54.68
kilometers/hr	feet/sec	0.9113
kilometers/hr	knots	0.5396
kilometers/hr	meters/min	16.67
kilometers/hr	miles/hr	0.6214

TO CONVERT	INTO	MULTIPLY BY
	K (Cont)	
kilometers/hr/sec	cms/sec/sec	27.78
kilometers/hr/sec	ft/sec/sec	0.9113
kilometers/hr/sec	meters/sec/sec	0.2778
kilometers/hr/sec	miles/hr/sec	0.6214
kilowatts	Btu/min	56.92
kilowatts	foot-lbs/min	4.426×10^4
kilowatts	foot-lbs/sec	737.6
kilowatts	horsepower	1.341
kilowatts	kg-calories/min	14.34
kilowatts	watts	1,000.0
kilowatt-hrs	Btu	3,413.0
kilowatt-hrs	ergs	3.600×10^{13}
kilowatt-hrs	foot-lbs	2.655×10^4
kilowatt-hrs	gram-calories	859,850.0
kilowatt-hrs	horsepower-hrs	1.341
kilowatt-hrs	joules	3.6×10^4
kilowatt-hrs	kg-calories	860.5
kilowatt-hrs	kg-meters	3.671×10^5
kilowatt-hrs	pounds of water evaporated from and at 212°F	3.53
kilowatt-hrs	pounds of water raised from 62° to 212°F	22.75
knots	feet/hr	6,080.0
knots	kilometers/hr	1.8532
knots	nautical miles/hr	1.0
knots	statute miles/hr	1.151
knots	yards/hr	2,027.0
knots	feet/sec	1.689
	L	
league	miles (approx)	3.0
Light year	Miles	5.9×10^{12}
Light year	Kilometers	9.46091×10^{12}
lines/sq cm	gausses	1.0
lines/sq in	gausses	0.1550
lines/sq in	webers/sq cm	1.550×10^{-9}
lines/sq in	webers/sq in	10^{-8}
lines/sq in	webers/sq meter	1.550×10^{-5}
links (engineer's)	inches	12.0
links (surveyor's)	inches	7.92
liters	bushels (US dry)	0.02838
liters	cu cm	1,000.0
liters	cu inches	61.02
liters	cu meters	0.001
liters	cu yards	1.308×10^{-3}
liters	gallons (US liq)	0.2642
liters	pints (US liq)	2.113
liters	quarts (US liq)	1.057
liters/min	cu ft/sec	5.886×10^{-4}
liters/min	gals/sec	4.403×10^{-3}
lumens/sq ft	foot-candles	1.0
Lumen	Spherical candle power	0.07958
Lumen	Watt	0.001496
Lumen/sq ft	Lumen/sq meter	10.76
lux	foot-candles	0.0929

Table A-6. Alphabetical Index of Metric Unit Conversions (Cont)

TO CONVERT	INTO	MULTIPLY BY
	M	
maxwells	kilolines	0.001
maxwells	webers	10^{-3}
megalines	maxwells	10^{4}
megohms	microhms	10^{12}
megohms	ohms	10^{6}
meters	centimeters	100.0
meters	feet	3.281
meters	inches	39.37
meters	kilometers	0.001
meters	miles (stat)	6.214×10^{-4}
meters	millimeters	1,000.0
meters	yards	1.094
meters	yards	1.179
meters/min	cms/sec	1.667
meters/min	feet/min	3.281
meters/min	feet/sec	0.05468
meters/min	kms/hr	0.06
meters/min	knots	0.03238
meters/min	miles/hr	0.03728
meters/sec	feet/min	196.8
meters/sec	feet/sec	3.281
meters/sec	kilometers/hr	3.6
meters/sec	kilometers/min	0.06
meters/sec	miles/hr	2.237
meters/sec	miles/min	0.03728
meters/sec/sec	cms/sec/sec	100.0
meters/sec/sec	ft/sec/sec	3.281
meters/sec/sec	kms/hr/sec	3.6
meters/sec/sec	miles/hr/sec	2.237
meter-kilograms	cm-dynes	9.807×10^{7}
meter-kilograms	cm-grams	10^{5}
meter-kilograms	pound-feet	7.233
microfarad	farads	10^{-6}
micrograms	grams	10^{-6}
microhms	megohms	10^{-12}
microhms	ohms	10^{-6}
microliters	liters	10^{-6}
Microns	meters	1×10^{-6}
miles (naut)	feet	6,080.27
miles (naut)	kilometers	1.853
miles (naut)	meters	1,853.0
miles (naut)	miles (statute)	1.1516
miles (naut)	yards	2,027.0
miles (statute)	centimeters	1.609×10^{5}
miles (statute)	feet	5,280.0
miles (statute)	inches	6.336×10^{4}
miles (statute)	kilometers	1.609
miles (statute)	meters	1,609.0
miles (statute)	miles (naut)	0.8684
miles (statute)	yards	1,760.0
miles/hr	cms/sec	44.70
miles/hr	feet/min	88.0
miles/hr	feet/sec	1.467
miles/hr	kms/hr	1.609
miles/hr	kms/min	0.02682
miles/hr	kms/min	0.02682
miles/hr	knots	0.8684
miles/hr	meters/min	26.82
miles/hr	miles/min	0.1667

TO CONVERT	INTO	MULTIPLY BY
	M (Cont)	
miles/hr/sec	cms/sec/sec	44.70
miles/hr/sec	feet/sec/sec	1.467
miles/hr/sec	kms/hr/sec	1.609
miles/hr/sec	meters/sec/sec	0.4470
miles/min	cms/sec	2,682.0
miles/min	feet/sec	88.0
miles/min	kms/minn	1.609
miles/min	knots/min	0.8684
miles/min	miles/hr	60.0
mil-feet	cu inches	9.425×10^{-6}
milliers	kilograms	1,000.0
Millimicrons	meters	1×10^{-9}
Milligrams	grains	0.01543236
milligrams	grams	0.001
milligrams/liter	parts/million	1.0
millihenries	henries	0.001
milliliters	liters	0.001
millimeters	centimeters	0.1
millimeters	feet	3.281×10^{-3}
millimeters	inches	0.03937
millimeters	kilometers	10^{-6}
millimeters	meters	0.001
millimeters	miles	6.214×10^{-7}
millimeters	mils	39.37
millimeters	yards	1.094×10^{-3}
million gals/day	cu ft/sec	1.54723
mils	centimeters	2.540×10^{-3}
mils	feet	8.333×10^{-5}
mils	inches	0.001
mils	kilometers	2.540×10^{-8}
mils	yards	2.778×10^{-5}
miner's inches	cu ft/min	1.5
Minims (British)	cubic cm	0.059192
Minims (US, fluid)	cubic cm	0.061612
minutes (angles)	degrees	0.01667
minutes (angles)	quadrants	1.852×10^{-4}
minutes (angles)	radians	2.909×10^{-4}
minutes (angles)	seconds	60.0
myriagrams	kilograms	10.0
myriameters	kilometers	10.0
myriawatts	kilowatts	10.0
	N	
nepers	decibels	8.686
Newton	Dynes	1×10^{5}
	O	
OHM (International)	OHM (absolute)	1.0005
ohms	megohms	10^{-6}
ohms	microhms	10^{6}
ounces	drams	16.0
ounces	grains	437.5
ounces	grams	28.349527
ounces	pounds	0.0625
ounces	ounces (troy)	0.9115
ounces	tons (long)	2.790×10^{-5}
ounces	tons (metric)	2.835×10^{-5}

Table A-6. Alphabetical Index of Metric Unit Conversions (Cont)

TO CONVERT	INTO	MULTIPLY BY
O (Cont)		
ounces (fluid)	cu inches	1.805
ounces (fluid)	liters	0.02957
ounces (troy)	grains	480.0
ounces (troy)	grams	31.103481
ounces (troy)	ounces (avdp)	1.09714
ounces (troy)	pennyweights (troy)	20.0
ounces (troy)	pounds (troy)	0.08333
Ounce/sq inch	Dynes/sq cm	0.4309
ounces/sq in	pounds/sq in	0.0625
P		
Parsec	Miles	19×10^{12}
Parsec	Kilometers	3.084×10^{13}
part-/million	grains/US gal	0.0584
parts/million	grains/Imp gal	0.07016
parts/million	pounds/million gal	8.345
Pecks (British)	cubic inches	554.6
Pecks (British)	liters	9.091901
Pecks (US)	bushels	0.25
Pecks (US)	cubic inches	37.605
Pecks (US)	liters	8.809582
Pecks (US)	quarts (dry)	8
pennyweights (troy)	grains	24.0
pennyweights (troy)	ounces (troy)	0.05
pennyweights (troy)	grams	1.55517
pennyweights (troy)	pounds (troy)	4.1667×10^{-3}
pints (dry)	cu inches	33.60
pints (liq)	cu cms	473.2
pints (liq)	cu feet	0.01671
pints (liq)	cu inches	28.87
pints (liq)	cu meters	4.732×10^{-4}
pints (liq)	cu yards	6.189×10^{-4}
pints (liq)	gallons	0.125
pints (liq)	liters	0.4732
pints (liq)	quarts (liq)	0.5
Planck's quantum	Erg second	6.624×10^{-27}
Poise	Gram/cm sec	1.00
Pounds (avoirdupois)	ounces (troy)	14.5833
poundals	dynes	13,826.0
poundals	grams	14.10
poundals	joules/cm	1.383×10^{-3}
poundals	joules/meter (newtons)	0.1383
poundals	kilograms	0.01410
poundals	pounds	0.03108
pounds	drams	256.0
pounds	dynes	44.4823×10^{4}
pounds	grains	7,000.0
pounds	grams	453.5924
pounds	joules/cm	0.04448
pounds	joules/meter (newtons)	4.448
pounds	kilograms	0.4536
pounds	ounces	16.0
pounds	ounces (troy)	14.5833
pounds	poundals	32.17
pounds	pounds (troy)	1.21528
pounds	tons (short)	0.0005
pounds (troy)	grains	5,760.0
P (Cont)		
pounds (troy)	grams	373.24177
pounds (troy)	ounces (avdp)	13.1657
pounds (troy)	pennyweights (troy)	240.0
pounds (troy)	pounds (avdp)	0.822857
pounds (troy)	tons (long)	3.6735×10^{-4}
pounds (troy)	tons (metric)	3.7324×10^{-4}
pounds (troy)	tons (short)	4.1143×10^{-4}
pounds of water	cu feet	0.01602
pounds of water	cu inches	27.68
pounds of water/min	cu ft/sec	2.670×10^{-4}
pound-feet	cm-dynes	1.356×10^{7}
pound-feet	cm-grams	13,825.0
pound-feet	meter-kgs	0.1383
pounds/cu ft	grams/cu cm	0.01602
pounds/cu ft	kgs/cu meter	16.02
pounds/cu ft	pounds/cu in	5.787×10^{-4}
pounds/cu ft	pounds/mil-loot	5.456×10^{-9}
pounds/cu in	gms/cu cm	27.68
pounds/cu in	kgs/cu meter	2.768×10^{4}
pounds/cu in	pounds/cu ft	1,728.0
pounds/cu in	pounds/mil-foot	9.425×10^{-6}
pounds/ft	kgs-meter	1.488
pounds/in	gms/cm	178.6
pounds/mil-foot	gms/cu cm	2.306×10^{6}
pounds/sq ft	atmospheres	4.725×10^{-4}
pounds/sq ft	feet of water	0.01602
pounds/sq ft	inches of mercury	0.01414
pounds/sq ft	kgs/sq meter	4.882
pounds/sq ft	pounds/sq in	6.944×10^{-3}
pounds/sq in	atmospheres	0.06804
pounds/sq in	feet of water	2.307
pounds/sq in	inches of mercury	2.036
pounds/sq in	kgs/sq meter	703.1
pounds/sq in	pounds/sq ft	144.0
Q		
quadrants (angle)	degrees	90.0
quadrants (angle)	minutes	5,400.0
quadrants (angle)	radians	1.571
quadrants (angle)	seconds	3.24×10^{5}
quarts (dry)	cu inches	67.20
quarts (liq)	cu cms	946.4
quarts (liq)	cu feet	0.03342
quarts (liq)	cu inches	57.75
quarts (liq)	cu meters	9.464×10^{-4}
quarts (liq)	cu yards	1.238×10^{-3}
quarts (liq)	gallons	0.25
quarts (liq)	liters	0.9463
R		
radians	degrees	57.30
radians	minutes	3,438.0
radians	quadrants	0.6366
radians	seconds	2.063×10^{5}
radians/sec	degrees/sec	57.30
radians/sec	revolutions/min	9.549

Table A-6. Alphabetical Index of Metric Unit Conversions (Cont)

TO CONVERT	INTO	MULTIPLY BY
R (Cont)		
radians/sec	revolutions/sec	0.1592
radians/sec/sec	revs/min/min	573.0
radians/sec/sec	revs/min/sec	9.549
radians/sec/sec	revs/sec/sec	0.1592
revolutions	degrees	360.0
revolutions	quadrants	4.0
revolutions	radians	6.283
revolutions/min	degrees/sec	6.0
revolutions/min	radians/sec	0.1047
revolutions/min	revs/sec	0.01667
revolutions/miri/min	radians/sec/sec	1.745×10^{-3}
revolutions/min/min	revs/min/sec	0.01667
revolutions/min/min	revs/sec/sec	2.778×10^{-4}
revolutions/sec	degrees/sec	360.0
revolutions/sec	radians/sec	6.283
revolutions/sec	revs/min	60.0
revolutions/sec/sec	radians/sec/sec	6.283
revolutions/sec/sec	revs/min/min	3,600.0
revolutions/sec/sec	revs/min/sec	60.0
Rod	Chain (Gunters)	0.25
Rod	Meters	5.029
Rods (Surveyors' meas.)	yards	5.5
rods	feet	16.5
S		
Scruples	grains	20
seconds (angle)	degrees	2.778×10^{-4}
seconds (angle)	minutes	0.01667
seconds (angle)	quadrants	3.087×10^{-6}
seconds (angle)	radians	4.848×10^{-6}
Slug	Kilogram	14.59
Slug	Pounds	32.17
Sphere	Steradians	12.57
square centimeters	circular mils	1.973×10^{5}
square centimeters	sq feet	1.076×10^{-3}
square centimeters	sq inches	0.1550
square centimeters	sq meters	0.0001
square centimeters	sq miles	3.861×10^{-11}
square centimeters	sq millimeters	100.0
square centimeters	sq yards	1.196×10^{-4}
square feet	acres	2.296×10^{-5}
square feet	sq cms	929.0
square feet	sq inches	144.0
square feet	sq meters	0.09290
square feet	sq miles	3.587×10^{-6}
square feet	sq millimeters	9.290×10^{4}
square feet	sq yards	0.1111
square inches	circular mils	1.273×10^{6}
square inches	sq cms	6.452
square inches	sq feet	6.944×10^{-3}
square inches	sq millimeters	645.2
square inches	sq mils	10 6
square inches	sq yards	7.716×10^{-4}
square kilometers	acres	247.1
square kilometers	sq cms	10 10
square kilometers	sq ft	10.76×10^{6}
square kilometers	sq inches	1.550×10^{9}
S (Cont)		
square kilometers	sq meters	10^{6}
square kilometers	sq miles	0.3861
square kilometers	sq yards	1.196×10^{6}
square meters	acres	2.471×10^{-4}
square meters	sq cms	10^{4}
square meters	sq feet	10.76
square meters	sq inches	1,550.0
square meters	sq miles	3.861×10^{-7}
square meters	sq millimeters	10^{6}
square meters	sq yards	1.196
square miles	acres	640.0
square miles	sq feet	27.88×10^{6}
square miles	sq kms	2.590
square miles	sq meters	2.590×10^{6}
square miles	sq yards	3.098×10^{6}
square millimeters	circular mils	1,973.0
square millimeters	sq cms	0.01
square millimeters	sq feet	1.076×10^{-5}
square millimeters	sq inches	1.550×10^{-3}
square mils	circular mils	1.273
square mils	sq cms	6.452×10^{6}
square mils	sq inches	10^{-6}
square yards	acres	2.066×10^{-4}
square yards	sq cms	8,361.0
square yards	sq feet	9.0
square yards	sq inches	1,296.0
square yards	sq meters	0.8361
square yards	sq miles	3.228×10^{-7}
square yards	sq millimeters	$8,361 \times 10^{5}$
T		
temperature (°C) +273	absolute temperature (°C)	1.0
temperature (°C) +17.78	temperature (°F)	1.8
temperature (°F) +460	absolute temperature (°F)	1.0
temperature (°F)32	temperature (°C)	5/9
tons (long)	kilograms	1,016.0
tons (long)	pounds	2,240.0
tons (long)	tons (short)	1.120
tons (metric)	kilograms	1,000.0
tons (metric)	pounds	2,205.0
tons (short)	kilograms	907.1848
tons (short)	ounces	32,000.0
tons (short)	ounces (troy)	29,166.66
tons (short)	pounds	2,000.0
tons (short)	pounds (troy)	2,430.56
tons (short)	tons (long)	0.89287
tons (short)	tons (metric)	0.9078
tons (short)/sq ft	kgs/sq meter	9,765.0
tons (short)/sq ft	pounds/sq in	2,000.0
tons of water/24 hrs	pounds of water/hr	83.333
tons of water/24 hrs	gallons/min	0.16643
tons of water/24 hrs	cu ft/hr	1.3349

Table A-6. Alphabetical Index of Metric Unit Conversions (Cont)

TO CONVERT	INTO	MULTIPLY BY
	V	
Volt/inch	Volt/cm	0.39370
Volt (absolute)	Statvolts	0.003336
	W	
watts	Btu/hr	3.4129
watts	Btu/min	0.05688
Watts	ergs/sec	107.0
watts	foot-lbs/min	44.27
watts	foot-lbs/sec	0.7378
watts	horsepower	1.341×10^{-3}
watts	horsepower (metric)	1.360×10^{-3}
watts	kg-calories/min	0.01433
watts	kilowatts	0.001
Watts (Abs)	BTU (mean)/min	0.056884
Watts (Abs)	joules/sec	1
watt-hours	Btu	3.413
watt-hours	ergs	3.60×10^{10}
watt-hours	foot-pounds	2,656.0
watt-hours	gram-calories	859.85
watt-hours	horsepower-hrs	1.341×10^{-3}
watt-hours	kilogram-calories	0.8605
	W (Cont)	
watt-hours	kilogram-meters	367.2
watt-hours	kilowatt-hrs	0.001
Watt (International)	Watt (absolute)	1.0002
webers	maxwells	10^8
webers	kilolines	10^5
webers/sq in	gausses	1.550×10^7
webers/sq in	lines/sq in	10^8
webers/sq in	webers/sq cm	0.1550
webers/sq in	webers/sq meter	1,550.0
webers/sq meter	gausses	10^4
webers/sq meter	lines/sq in	6.452×10^4
webers/sq meter	webers/sq cm	10^{-4}
webers/sq meter	webers/sq in	6.452×10^{-4}
	Y	
yards	centimeters	91.44
yards	kilometers	9.144×10^{-4}
yards	meters	0.9144×10^{-4}
yards	miles (naut)	4.934×10^{-4}
yards	miles (stat)	5.682×10^{-4}
yards	millimeters	914.4

THIS PAGE INTENTIONALLY LEFT BLANK.

GLOSSARY

ACID. A fundamental chemical class distinguished by having reactive hydrogen radicals (pH below 7.0). Acids can be extremely corrosive to metal and damaging to fabric.

ACM. Abbreviation for Aircraft Combat Maneuvers.

AIRCREWMEMBER. An aircraft crewmember. Passengers are not considered aircrewmembers.

ALKALINE. A substance which is opposite to an acid, a base (pH above 7.0). Also, any substance which has the properties of an alkali (metallic hydroxide).

ALPACA. The woolly hair from the alpaca. Alpaca wool is used in making linings and thin cloth.

APPROX. Abbreviation for approximately.

AQUEOUS. Made with, or from water.

A/R. Abbreviation for as required.

ARAMID. A heat-resistant, low flammability rate knitted material with excellent stability to 700°F. Its inherent properties allow the material to last 6-10 times longer than other materials and does not lose these properties with washing or drying. (Replaces polyamide material.)

ASSEMBLY. A grouping of parts fitted together to form a complete unit.

ATTENUATION. Reduction or lessening. For example, sound attenuation is the reduction of ambient noise in an aircraft by use of a helmet equipped with sound attenuating earphones; sonic earcup.

BACKSTITCH. A stitch made by inserting the needle a stitch length behind and bringing it up a stitch length ahead of the last stitch. Also, sewing back over a row of stitches.

BARTACK. A concentrated series of zig-zag like stitches used to reinforce points of stress.

BEESWAX. A wax that is applied cold or melted to thread to prevent raveling or cloth unknotting and to make thread easier to sew.

BIAS. A line or fold or cut diagonal to the grain of a fabric.

BINDING. A piece of tape or fabric folded over and stitched to a raw edge of cloth to prevent raveling or fraying.

BOXSTITCH. Rectangular stitch used to attach or reinforce.

BREADTH. The measure of an object from side to side (width).

C. Abbreviation for Celsius. A thermometric scale of which the interval between the freezing point and boiling point of water is divided into 100 degrees. 0 degrees C represents the freezing point and 100 degrees C represents the boiling point of water.

CAUTION. Indicates danger to the equipment. The caution precedes the step or item to which it refers.

CDI. Abbreviation for Collateral Duty Inspector. A CDI is permanently assigned to a production division with secondary quality assurance assignments to inspect work accomplished within his production division.

℄ Symbol for centerline.

COMPONENT. An item of equipment making up part of an assembly.

CONFIGURATION. The make-up, size, shape and relative location of parts in an item of equipment and its accessories. This includes the composition of the materials as well as marking details. The configuration of each equipment is specified by government drawings, military specifications and modification instructions.

COVERALL, ANTI-EXPOSURE. A one-piece outer garment worn to provide protection in adverse, low temperature conditions.

COVERALL, ANTI-g CUTAWAY. A garment worn by the aircrewmen of high performance aircraft to counteract the gravity forces caused by accelerations of aircraft maneuvers.

CROSS BOXSTITCH. A boxstitch with an X pattern stitch inside. Sometimes called BOX-X STITCH.

D-RING. A metal fitting shaped in the form of the letter “D”.

DART. A stitched, tapering fold in a section of fabric. Used for shaping the fabric by gathering material to conform with a predetermined contour.

DIA. Abbreviation for diameter.

DISPOSITION. Instructions on what is to be done with items which are obsolete, worn out or beyond repair.

DOFF. To remove or take off an item of clothing or equipment.

DON. To put on an item of clothing or equipment.

EDGEROLL. A beading around the border of a helmet shell, protecting the wearer from sharp edges and adds to energy absorption.

EGRESS. Outlet or means of getting out.

EJECTION SEAT. An emergency escape seat for propelling an occupant out and away from the aircraft by means of an explosive charge or rocket motor.

ELASTOMER. Any of various elastic substances resembling rubber.

EXTRUSION. A raised or grooved surface or edge.

F. Abbreviation for Fahrenheit. Pertaining to the thermometric scale where 32 degrees represents the freezing point of water and 212 degrees the boiling point.

FABRICATE. To make up or construct an item of equipment, accessory or material.

FOLDER. A device used as an attachment to a sewing machine to guide and fold cloth.

FAKE. To fold a line or lanyard in a back and forth fashion.

FASTENER, SLIDE. A type of fastener made of two lengths of tape with a series of metal or plastic scoops fastened to one side of each. A metal slide is provided which causes the scoops to mesh or lock in place as the fastener is closed, or to separate as the fastener is opened. Colloquial: ZIPPER.

FASTENER, SNAP. A metal fastener containing essentially a ball and a socket attached to opposed parts of a material and used to hold mating surfaces together.

FIBER. A natural or synthetic filament (as of wool, cotton, rayon, etc.) capable of being spun into yarn.

FID. A small, flat, hand tool of metal or wood used during the packing procedure to straighten and insert flaps into the container.

FITTING, QUICK-RELEASE. A device used to connect and release on instant response.

GAGE. An instrument for measuring pressure.

GAUGE. A measurement of size or thickness.

GFE. Abbreviation for Government Furnished Equipment.

GROMMET. A metal eye and washer used to reinforce a hole in material.

HEM. A border or reinforced edge formed by folding cloth back and securing it, usually by sewing.

HOOK TAPE. A strip of fabric tape with miniature hooks on one side. Hook tape is used together with pile tape as a fastener.

IN. Abbreviation for inches.

INFLATION ASSEMBLY. Inflation valve and carbon dioxide cylinder as a unit.

IN.$H_2$0. Abbreviation for inches of water column (27.68 IN.$H_2$0 equals 1 PSI equals 2.036 IN.Hg).

IN.Hg. Abbreviation for inches of mercury column (0.07349 IN.Hg equals 1.0 IN.$H_2$0).

INSPECTION. A close examination for damage, wear and dirt. Also, a regularly scheduled examination of oxygen equipment and accessories.

KNOT, BOWLINE. A knot formed by making a small overhand loop a desired distance from the end of the line. The end of the line is then passed through the loop from the underside of the main part of the line and around behind standing line then back through the small loop. When this knot is drawn tight, it will not slip but can be easily untied.

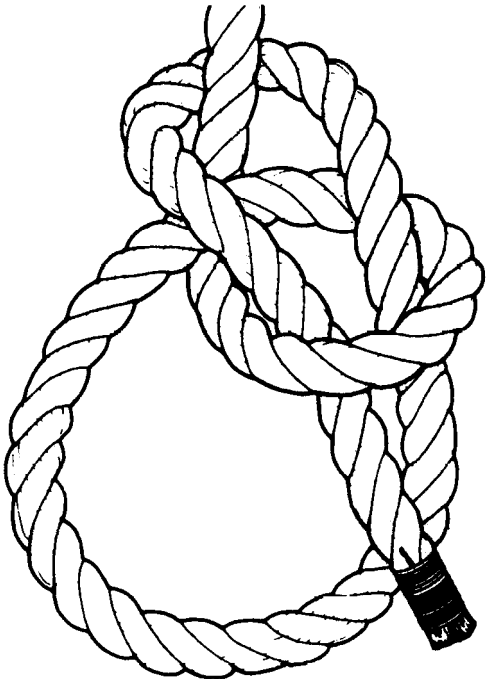

67-691

KNOT, LARK'S HEAD. A knot formed around an attachment ring or bar by passing the free ends of the line around the bar or through the ring and then through a loop or bight in the line.

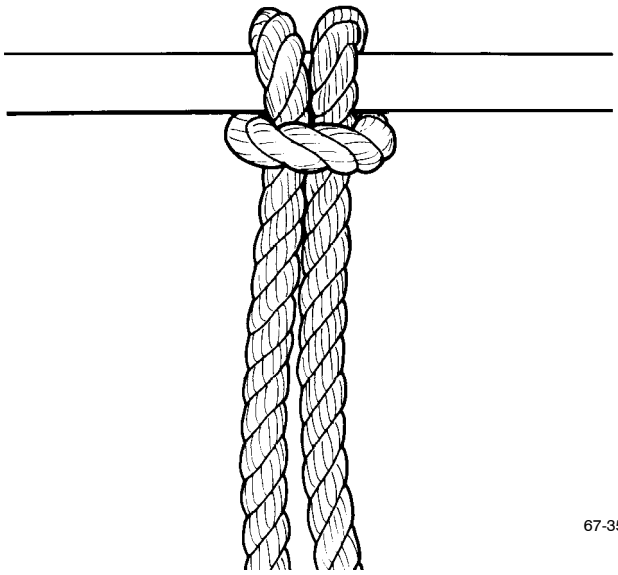

67-358

KNOT, OVERHAND. A simple knot tied in the end of a line by forming a loop and passing the end over and down through the loop.

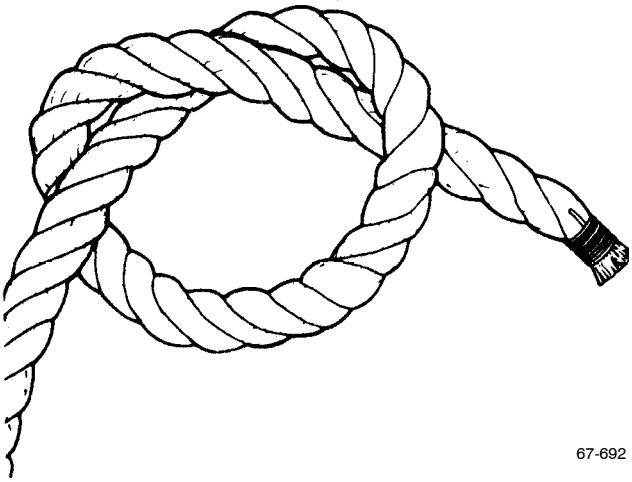

67-692

KNOT, SURGEON'S. The surgeon's knot is similar to the square knot, except that the first overhand tie is wrapped twice around the cord or line.

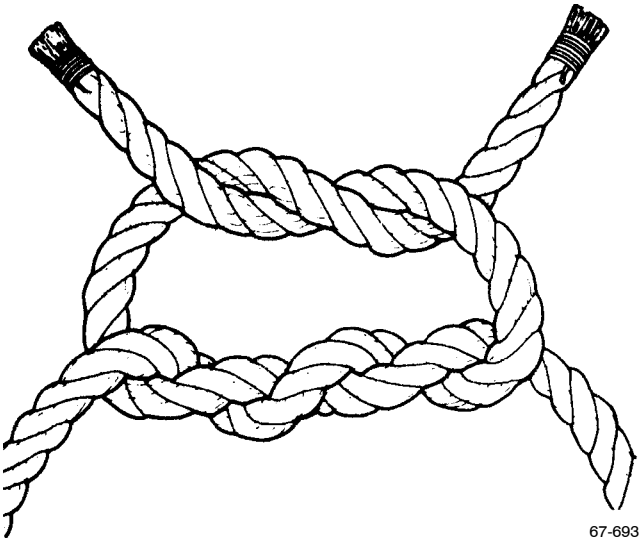

67-693

LBS. Abbreviation for pounds.

LOCKWIRE. A wire that prevents loosening of a securing device.

LPM. Abbreviation for liters per minute.

MANUFACTURER'S CODES. Identification codes for every manufacturer listed as a procurement source in accordance with cataloging handbooks H4/H8, Commercial and Government Entity Codes.

METHYL ETHYL KETONE (MEK). A colorless, flammable alcohol used in lacquers, paint removers, cements and adhesives, celluloid and cleaning fluids.

MILDEW. A damaging fungus or mold which forms on cloth or leather. It is caused by dampness and the absence of fresh air and sunlight.

MOUTON. A processed sheepskin that has been sheared and dyed to resemble beaver or seal.

NAMEPLATE. A label attached to equipment, giving data as to type, model number, date of manufacture, part number, serial number, etc.

NHA. Abbreviation for next higher assembly.

NO. Abbreviation for number.

NOTE. An information item. A note may precede or follow the item or step to which it refers.

PACK. To put together compactly; to store neatly, for example, packing a survival kit consists of stowing the survival equipment in a container, folding and covering the raft, and inserting both into the kit container.

PARAFFIN. Wax generally used with 50 percent beeswax as a hot dip to prevent the fraying of cut ends of webbing, cord, thread or tape. See also BEESWAX.

pH VALUE. A numerical scale of measuring the acidity or alkalinity of a solution. A pH reading can be made using litmus paper and comparison chart. A reading of 7.0 indicates a neutral solution; below 7.0 indicates acid and above 7.0 indicates alkaline (base).

PHOSPHORESCENT MATERIAL. A material that glows in the dark without producing any noticeable heat.

PILE TAPE. Strip of fabric tape with small nylon loops on one side. Used with hook tape as a fastener.

POLYAMIDE CLOTH. A fire-resistant synthetic cloth; also called “Nomex.”

PSI. Abbreviation for pounds per square inch. See also: PSIA and PSIG.

PSIA. Abbreviation for pounds per square inch, absolute. Absolute pressure is measured from absolute zero (100% vacuum), rather than from normal, or atmospheric pressure. It equals gage pressure plus 14.696 pounds per square inch. See also: PSI and PSIG.

PSIG. Abbreviation for pounds per square inch, gage. Indicates pressure above ambient pressure, as indicated on a pressure gage vented to the atmosphere. See also: PSI and PSIA.

QUALIFIED PERSONNEL. Graduates of the Aircrew Survival Equipment School.

QUALITY ASSURANCE INSPECTION. An inspection of work by someone other than the person performing the work. Quality assurance inspections ensure that critical procedures in a job and the job as a whole are performed correctly and are not a threat to safety or function.

R. Abbreviation for radius.

RAVEL (UNRAVEL). To separate, untwist or unwind, leaving a frayed or ragged edge. RAVEL is the preferred work to describe such a condition.

REF. Abbreviation for reference.

REFURBISH. To restore to original condition.

REPAIRS, MAJOR. Repairs requiring special equipment, personnel or materials not normally available at intermediate level of maintenance.

REPAIRS, MINOR. Repairs that can be performed at organizational or intermediate levels of maintenance.

RIG. To assemble and adjust; to equip.

SAFETY TIE. Low strength thread which serves to inhibit accidental opening, discharge or separation.

SAFETY WIRE. Low strength wire which serves to inhibit premature opening, discharge or separation.

SCRAP. To discard, with proper authorization, items, parts or materials which are obsolete or no longer useable.

SEAM. A series of stitches joining two or more pieces of cloth.

SEAR. To melt or seal with heat, for example, to sear the end of nylon webbing one heats the end until the nylon melts and fuses. This prevents raveling.

SM&R CODES. Abbreviation for source, maintenance and recoverability codes. Comprised of three parts; a two-position source code, a three position maintenance code, and a one-position recoverability code. Refer to NAVSUPINST 4423.29 for further details.

STIRRUP. A cloth or leather strip sewn across the cuff of a pant leg to form a loop. When the pants are put on, the stirrup, which is worn under the foot, prevents the pant leg from riding up.

STITCHES PER INCH. The number of needle penetrations where threads are interlaced, per linear inch.

STOWING. The act of putting away in a neat, orderly fashion.

SURVIVAL VEST. A vest constructed of nylon cloth and equipped with pockets and attachments for stowage of survival items.

SUIT, ANTI-EXPOSURE. A garment worn to provide protection in adverse, low temperature conditions.

TACK. To attach temporarily prior to final sewing. Also, to tie temporarily as an aid in positioning. Also, to permanently secure portions of a seat survival kit assembly together.

TAPE. A narrow, woven ribbon of cotton, linen, nylon or other material.

TEMPLATE. A pattern or gage commonly in the form of a thin plate of cardboard, wood or metal. It is used as a guide in the layout or cutting of flat work.

TYP. Abbreviation for typical.

UNRAVEL. See RAVEL.

V-RING. A metal fitting shaped in the form of a closed letter "V".

VRHMU. Abbreviation for visor reticle helmet mounted unit. A one-piece visor housing that contains a parabolic visor and four electronic sensor assemblies which are mounted, two per side.

VTAS. Abbreviation for visual target acquisition system. A helmet sight system which allows the pilot to direct his fire control system by viewing a prospective target.

WAFFLE WEAVE. A type of weave used in making cloth. It has a pattern of small raised squares. The squares provide dead-air space for improved insulation.

WARNING. Indicates danger to personnel. A warning precedes the item or step to which it refers.

WARP. The threads that run parallel to the selvage edge of cloth; those that are crossed by the filling threads.

WEBBING. A strong, narrow closely-woven tape of synthetic cotton or linen fiber designed for bearing weight.

WEBBING, TUBULAR. Strong synthetic or natural fiber webbing woven in the form of a tube.

WOLVERINE FUR. A long, straight light-weight fur from the wolverine; usually dark brown and black in color. Wolverine fur does not collect moisture and frost in cold weather and is, therefore, used to trim collars and hoods on winter clothing.

X. Abbreviation for times or by; sign for multiplication.

THIS PAGE INTENTIONALLY LEFT BLANK.

ALPHABETICAL INDEX

Subject	Paragraph, Figure, Table Number
A	
Accident Evaluation	2-7
Anti-Exposure Assemblies	5-1
A/P22P-6 Constant Wear Anti-Exposure Apparel	5-10, F5-3
A/P22P-7(V) Quick Donning Anti-Exposure Apparel	5-389, F5-53
A/P22P-17 Passenger Anti-Exposure Apparel	5-311, F5-47
Aviation Rescue Swimmer's Drysuit (ARSD) MSD560 and MSD565	5-244, F5-45, F5-46
OTS-600 Dry Suit, Style 601GBR005B	5-187, F5-42
Wet Suit, Non-Vented Commercial	5-425, F5-60, F5-61
Anti-g Garments	4-1
CSU-13B/P Anti-g Garment	4-7, F4-2
CSU-15/P Anti-g Garment	4-7, F4-1
CSU-20/P22P-16 Anti-g Garment	4-89, F4-10
CSU-21/P22P-16 Counter Pressure Vest	4-43, F4-11
A/P22P-15 Helicopter Aircrew Survival and Armor Protective Assembly	7-1
Application	
Anti-Exposure Assemblies	5-7, F5-1
A/P22P-6 Constant Wear Anti-Exposure Apparel	5-24
A/P22P-7(V) Quick Donning Anti-Exposure Apparel	5-400
A/P22P-17 Passenger Anti-Exposure Apparel	5-318
Aviation Rescue Swimmer's Drysuit (ARSD) MSD560 and MSD565	5-254
OTS-600 Dry Suit, Style 601GBR005B	5-197, 5-198
Wet Suit, Non-Vented Commercial	5-432
Anti-g Garments	4-5
CSU-13B/P Anti-g Garment	4-11
CSU-15/P Anti-g Garment	4-11
CSU-20/P22P-16 Anti-g Garment	4-93
CSU-21/P22P-16 Counter Pressure Vest	4-47
Body Armor	
PRU-60/P22P-15 Soft Body Armor	7-57, T7-6
PRU-61/P22P-15 Hard Body Armor	7-57, T7-6
Boots	
Aircrew Safety Boots	3-365
Black Flyer's Boot (Belleville 800 ST)	3-428
CSAR Danner Recon Boot	3-322
Desert Tan Flyer's Boot (Belleville 330 DES ST)	3-384
Hot Weather Flight Boot (Belleville 340)	3-451
Intermediate Cold Weather Safety Toe Boots	3-409
Coveralls	
CWU-27/P Flyer's Summer Coverall	3-11
CWU-64/P Cold Weather Flyer's Coverall	3-38
CWU-73/P Flyer's Summer Coverall	3-11
Enhanced Air Force Flight Suit (EAFFS)	3-11
Improved Aircrew Battle Dress Uniform (IABDU)	3-364
Modified Enhanced Air Force Flight Suit (MEAFFS)	3-11
Finger Light, Self-Contained	8-91
Gloves	
Cotton Work Gloves (Pre-Flight)	3-528
GS/FRP-2 Fire-Resistant Flyer's Gloves	3-644
HAU-6/P Lined Gloves	3-660
HAU-12/P Anti-Exposure Mittens	3-679

ALPHABETICAL INDEX (Cont)

Subject	Paragraph, Figure, Table Number
A (Cont)	
Application (Cont)	
Gloves (Cont)	
HAU-14/P Cold/Wet Protective Flyer's Gloves	3-566
HAU-15/P Intermediate Cold Weather Flyer's Gloves	3-585
Heavy Duty Leather Gloves	3-604
MAX GRIP NT Leather Flight Gloves	3-622
Silk Glove Liners	3-549
Hoods	
Anti-Flash Hood	3-699
HGU-32/P Anti-Exposure Hood	3-716
Insoles, Insulating	3-491
Jackets	
CWU-45/P Cold Weather Flyer's Jacket	3-142
Intermediate Flyer's Jacket, Type G-1	3-124
Liners	
Cold Weather Fiber Pile Liners	3-184
CWU-9/P Cold Weather Liners	3-203
CWU-23/P Liner	3-222
CWU-72/P Liner	3-244
CWU-81/P Liner, Shirt	3-265
CWU-82/P Liner, Drawers	3-265
Multi-Climate Protection System (MCPS)	3-165, T3-15
Slip Protectors	3-513
Socks, All Weather	3-476
Spectacles	
Darkness Adaptation Spectacles	8-24
EDU-1/P Neodymium Laser Protective Spectacles	8-35
EDU-5/P Laser Eye Protection Spectacles	8-65
FV2 Laser Eye Protection Spectacles	8-48
FV-9 Laser Eye Protective Spectacles	8-105
HGU-4/P Sun Glasses	8-13
Survival Vests	
CMU-21/P22P-7(V) Survival Vest	6-54
CMU-23A/P Survival Vest	6-68
CMU-24/P Survival Vest	6-106
CMU-29(V)2/P CBR Overvest	6-136
CMU-30/P22P-15 Survival Vest	7-10
SV-2B Survival Vest	6-11
Underwear	
CWU-43/P Drawers, Cold Weather Underwear	3-287
CWU-44/P Undershirt, Cold Weather Underwear	3-287
Watch, Aviator's Wrist	8-3
B	
Body Armor	
PRU-60/P22P-15 Soft Body Armor	7-57, F7-15
PRU-61/P22P-15 Hard Body Armor	7-57, F7-15
Small Arms Protective Body Armor (MIL-C-43544)	3-327

ALPHABETICAL INDEX (Cont)

Subject — Paragraph, Figure, Table Number

B (Cont)

Boots
- Aircrew Safety Boots . . . 3-361, F3-31
- Brown Leather Flyer's Boot (Belleville 330 ST) . . . 3-339, F3-30
- CSAR Danner Recon Boot . . . 3-318, F3-29
- Desert Tan Flyer's Boot (Belleville 330 DES ST) . . . 3-380, F3-33
- Intermediate Cold Weather Safety Toe Boots . . . 3-405, F3-34

C

Cleaning
- Anti-Exposure Assemblies
  - A/P22P-6 Constant Wear Anti-Exposure Apparel . . . 5-92
    - CWU-62/P Anti-Exposure Coverall . . . 5-58
    - CWU-62A/P Anti-Exposure Coverall . . . 5-58
    - CWU-62B/P Anti-Exposure Coverall . . . 5-58
    - CWU-79/P Anti-Exposure Coverall . . . 5-58
    - CWU-83/P Anti-Exposure Ensemble . . . 5-58
  - A/P22P-7(V) Quick Donning Anti-Exposure Apparel . . . 5-
  - A/P22P-17 Passenger Anti-Exposure Apparel . . . 5-
  - Aviation Rescue Swimmer's Drysuit (ARSD) MSD560 and MSD565 . . . 5-
  - Wet Suit, Non-Vented Commercial . . . 5-
- Anti-g Garments
  - CSU-13B/P Anti-g Garment . . . 4-37
  - CSU-15/P Anti-g Garment . . . 4-37
  - CSU-20/P22P-16 Anti-g Garment . . . 4-128
  - CSU-21/P22P-16 Counter Pressure Vest . . . 4-87
- Body Armor
  - PRU-60/P22P-15 Soft Body Armor . . . 7-8
    - Casing Assembly . . . 7-68
    - Soft Ballistic Inerts . . . 7-65
  - PRU-61/P22P-15 Hard Body Armor . . . 7-8
    - Casing Assembly . . . 7-67
    - Hard Ballistic Inserts . . . 7-65
- Boots
  - Desert Tan Flyer's Boot (Belleville 330 DES ST) . . . 3-352
- Coveralls
  - CWU-27/P Flyer's Summer Coverall . . . 3-27
  - CWU-64/P Cold Weather Flyer's Coverall . . . 3-55
  - CWU-73/P Flyer's Summer Coverall . . . 3-27
  - Enhanced Air Force Flight Suit (EAFFS) . . . 3-27
  - Improved Aircrew Battle Dress Uniform (IABDU) . . . 3-78
  - Modified Enhanced Air Force Flight Suit (MEAFFS) . . . 3-27
- CWU-18/P Extreme Cold Weather Trousers . . . 3-117
- Gloves
  - Cotton Work Gloves (Pre-Flight) . . . 3-541
  - GS/FRP-2 Fire-Resistant Flyer's Gloves . . . 3-654
  - HAU-6/P Lined Gloves . . . 3-673
  - HAU-12/P Anti-Exposure Mittens . . . 3-696
  - HAU-14/P Cold/Wet Protective Flyer's Gloves . . . 3-549
  - HAU-15/P Intermediate Cold Weather Flyer's Gloves . . . 3-598

ALPHABETICAL INDEX (Cont)

Subject	Paragraph, Figure, Table Number
C (Cont)	
Cleaning (Cont)	
Gloves (Cont)	
Heavy Duty Leather Gloves	3-617
Silk Glove Liners	3-560
Hoods	
Anti-Flash Hood	3-710
HGU-32/P Anti-Exposure Hood	3-727
Insoles, Insulating	3-508
Jackets	
CWU-36/P Summer Flyer's Jacket	3-55
CWU-45/P Cold Weather Flyer's Jacket	3-78
Liners	
Cold Weather Fiber Pile Liners	3-216
CWU-9/P Cold Weather Liners	3-197
CWU-23/P Liner	3-235
CWU-72/P Liner	3-257
CWU-81/P Liner, Shirt	3-278
CWU-82/P Liner, Drawers	3-278
Multi-Climate Protection System (MCPS)	3-178
Socks, All Weather	3-489
Spectacles	
Darkness Adaptation Spectacles	8-31
EDU-1/P Neodymium Laser Protective Spectacles	8-43
EDU-5/P Laser Eye Protection Spectacles	8-81
FV2 Laser Eye Protection Spectacles	8-56
FV-9 Laser Eye Protective Spectacles	8-115
HGU-4/P Sun Glasses	8-20
Survival Vests	
CMU-24/P Survival Vest	6-122
CMU-29(V)2/P CBR Overvest	6-151
CMU-30/P22P-15 Survival Vest	7-23
SV-2B Survival Vest	6-25
U.S.I.A. Military Exotherm Fleece Jumpsuit (SAR Swimmers Only)	3-315
Underwear	
CWU-43/P Drawers, Cold Weather Underwear	3-300
CWU-44/P Undershirt, Cold Weather Underwear	3-300
Configuration	
Anti-Exposure Assemblies	5-3
A/P22P-6 Constant Wear Anti-Exposure Apparel	5-12, F5-2, T5-1
Anti-Exposure Coverall Liners	5-51, T5-1C
CWU-62/P Anti-Exposure Coverall	5-96, F5-3
CWU-62A/P Anti-Exposure Coverall	5-12, F5-4
CWU-62B/P Anti-Exposure Coverall	5-12, F5-5
CWU-74/P Coverall	5-96
CWU-83P Passenger Anti-Exposure Ensemble	5-96
A/P22P-7(V) Quick Donning Anti-Exposure Apparel	5-143, F5-24, T5-23
CMU-21/P22P-7(V) Modified Survival Vest	5-148
CWU-18/P Cold Weather Trousers	5-146
CWU-45/P Cold Weather Flyer's Jacket	5-146
CWU-60/P Quick Donning Anti-Exposure Coverall	5-147

ALPHABETICAL INDEX (Cont)

Subject — Paragraph, Figure, Table Number

C (Cont)

Configuration (Cont)
- Anti-Exposure Assemblies (Cont)
  - A/P22P-7(V) Quick Donning Anti-Exposure Apparel (Cont)
    - HGU-32/P Anti-Exposure Hood . . . 5-150
    - HGU-68(V)2/P Helmet . . . 5-151
    - LPU-27/P22P-7(V) Life Preserver . . . 5-149
    - Underwear . . . 5-145
  - A/P22P-17 Passenger Anti-Exposure Apparel . . . 5-13, F5-2
  - Aviation Rescue Swimmer's Drysuit (ARSD) MSD560 and MSD565 . . . 5-175J
  - OTS-600 Dry Suit, Style 601GBR005B . . . 5-256-5-257, F5-37
  - Wet Suit, Non-Vented Commercial . . . 5-119, F5-18, F5-19
- Anti-g Garments . . . 4-3
  - CSU-13B/P Anti-g Garment . . . 4-9, F4-4
  - CSU-15/P Anti-g Garment . . . 4-9, F4-3
  - CSU-20/P22P-16 Anti-g Garment . . . 4-87, F4-9
  - CSU-21/P22P-16 Counter Pressure Vest . . . 4-42, F4-10
- A/P22P-15 Helicopter Aircrew Survival and Armor Protective Assembly . . . 7-3
- Body Armor
  - PRU-60/P22P-15 Soft Body Armor . . . 7-53, F7-15, T7-4
  - PRU-61/P22P-15 Hard Body Armor . . . 7-53, F7-15, F7-16, T7-4
- Boots
  - Aircrew Safety Boots . . . 3-228, F3-15
  - Brown Leather Flyer's Boot (Belleville 330 ST) . . . 3-206
  - CSAR Danner Recon Boot . . . 3-185
  - Desert Tan Flyer's Boot (Belleville 330 DES ST) . . . 3-247
  - Intermediate Cold Weather Safety Toe Boots . . . 3-272
- Coveralls
  - CWU-27/P Flyer's Summer Coverall . . . 3-7, F3-1, T3-2
  - CWU-64/P Cold Weather Flyer's Coverall . . . 3-38, F3-3, F3-4
  - CWU-73/P Flyer's Summer Coverall . . . 3-7, F3-1, T3-2
  - Enhanced Air Force Flight Suit (EAFFS) . . . 3-7, F3-1, T3-2
  - Improved Aircrew Battle Dress Uniform (IABDU) . . . 3-649
  - Modified Enhanced Air Force Flight Suit (MEAFFS) . . . 3-7, F3-1, T3-2
- CWU-18/P Extreme Cold Weather Trousers . . . 3-82, F3-6
- Finger Light, Self-Contained . . . 8-153
- Flight Clothing, General Purpose . . . 3-3
- Gloves
  - Cotton Work Gloves (Pre-Flight) . . . 3-164, F3-12
  - GS/FRP-2 Fire-Resistant Flyer's Gloves . . . 3-291, F3-19
  - HAU-6/P Lined Gloves . . . 3-310, F3-20
  - HAU-12/P Anti-Exposure Mittens . . . 3-595, F3-34
  - HAU-14/P Cold/Wet Protective Flyer's Gloves . . . 3-539, F3-32
  - HAU-15/P Intermediate Cold Weather Flyer's Gloves . . . 3-558, F3-33
  - Heavy Duty Leather Gloves . . . 3-577
  - Silk Glove Liners . . . 3-522, F3-31
- Hoods
  - Anti-Flash Hood . . . 3-331, F3-21
  - HGU-32/P Anti-Exposure Hood . . . 3-348, F3-22
- Insoles, Insulating . . . 3-489, F3-29

ALPHABETICAL INDEX (Cont)

Subject — Paragraph, Figure, Table Number

C (Cont)

Configuration (Cont)
- Jackets
  - CWU-36/P Summer Flyer's Jacket . . . 3-62, F3-5
  - CWU-45/P Cold Weather Flyer's Jacket . . . 3-120, F3-8
  - Intermediate Flyer's Jacket, Type G-1 . . . 3-102, F3-7
- Leakage Tester, TTU-551/E . . . F4-6
- Leak Test Fixture, Anti-Exposure Assemblies . . . 5-244
  - Test Fixtures . . . 5-245, F5-36
  - Wrist Seal Clamp . . . 5-246, F5-35
- Leak Test Fixture, Anti-g Garment . . . 4-37, F4-8
- Liners
  - Cold Weather Fiber Pile Liners . . . 3-368, F3-23
  - CWU-9/P Cold Weather Liners . . . 3-387, F3-24
  - CWU-23/P Liner . . . 3-406, F3-25
  - CWU-72/P Liner . . . 3-428, F3-26
  - CWU-81/P Liner, Shirt . . . 3-449, F3-27
  - CWU-82/P Liner, Drawers . . . 3-449, F3-27
- Multi-Climate Protection System (MCPS) . . . 3-630, F3-35, F3-36, F3-37, F3-38, F3-39, F3-40, F3-41, F3-42, F3-43, T3-30
- Navy Combat Edge Aircrew Protective Assembly, A/P22P-16 . . . 9-3, F9-1, F9-2
- Slip Protectors . . . 3-507, F3-30
- Socks, All Weather . . . 3-470, F3-28
- Spectacles
  - EDU-5/P Laser Eye Protection Spectacles . . . 8-120, F8-15
- Survival Vests
  - CMU-21/P22P-7(V) Survival Vest . . . 6-48
  - CMU-23A/P Survival Vest . . . 6-60
    - Chemical, Biological, Radiological (CBR) . . . F6-29, F6-30
    - Normal . . . F6-28
  - CMU-24/P Survival Vest . . . 6-90, F6-36, F6-37
  - CMU-29(V)2/P CBR Overvest . . . 6-117, F6-40, F6-41
  - CMU-30/P22P-15 Survival Vest . . . 7-8, F7-1
  - SV-2B Survival Vest . . . 6-3, F6-4
- Underwear
  - CWU-43/P Drawers, Cold Weather Underwear . . . 3-144, F3-10
  - CWU-44/P Undershirt, Cold Weather Underwear . . . 3-145, F3-11

Coveralls
- CWU-27/P Flyer's Summer Coverall . . . 3-5, F3-1, T3-2, T3-3
- CWU-64/P Cold Weather Flyer's Coverall . . . 3-36, F3-3
- CWU-73/P Flyer's Summer Coverall . . . 3-5, F3-1, T3-2
- CWU-83/P Passenger Anti-Exposure Coverall Ensemble . . . 5-45A, F5-4A
- Enhanced Air Force Flight Suit (EAFFS) . . . 3-5, F3-1, T3-2
- Improved Aircrew Battle Dress Uniform (IABDU) . . . 3-647
- Modified Enhanced Air Force Flight Suit (MEAFFS) . . . 3-5, F3-1, T3-2

CWU-18/P Extreme Cold Weather Trousers . . . 3-82, F3-6

D

Description
- Anti-Exposure Assemblies . . . 5-1
  - A/P22P-6 Constant Wear Anti-Exposure Apparel . . . 5-46, F5-5
  - A/P22P-7(V) Quick Donning Anti-Exposure Apparel . . . 5-141, F5-24

ALPHABETICAL INDEX (Cont)

Subject — Paragraph, Figure, Table Number

D (Cont)

Description (Cont)
- Anti-Exposure Assemblies (Cont)
  - A/P22P-17 Passenger Anti-Exposure Apparel 5-10, F5-2
  - Aviation Rescue Swimmer's Drysuit (ARSD) MSD560 and MSD565 . . . . . 5-175A, F5-30A, F5-30B
  - OTS-600 Dry Suit, Style 601GBR005B 5-248, 5-249, F5-37
  - Wet Suit, Non-Vented Commercial 5-117, F5-18, F5-19
- Anti-g Garments 4-1
  - CSU-13B/P Anti-g Garment 4-7, F4-2
  - CSU-15/P Anti-g Garment 4-7, F4-1
  - CSU-20/P22P-16 Anti-g Garment 4-85, F4-9
  - CSU-21/P22P-16 Counter Pressure Vest 4-40, F4-10
- A/P22P-15 Helicopter Aircrew Survival and Armor Protective Assembly 7-1
- Body Armor
  - PRU-60/P22P-15 Soft Body Armor 7-51, F7-15
  - PRU-61/P22P-15 Hard Body Armor 7-51, F7-15, F7-16
- Boots
  - Aircrew Safety Boots 3-227, F3-15, F3-16, T3-15
  - Brown Leather Flyer's Boot, (Belleville 330 ST) 3-205, F3-14
  - CSAR Danner Recon Boot 3-184, F3-13
  - Desert Tan Flyer's Boot (Belleville 330 DES ST) 3-246, F3-17
  - Intermediate Cold Weather Safety Toe Boots 3-271, F3-18
- Coveralls
  - CWU-27/P Flyer's Summer Coverall 3-6, F3-1
  - CWU-64/P Cold Weather Flyer's Coverall 3-37, F3-3
  - CWU-73/P Flyer's Summer Coverall 3-6, F3-1
  - CWU-83/P Passenger Anti-Exposure Coverall Ensemble 5-45A, T5-1
  - Enhanced Air Force Flight Suit (EAFFS) 3-6, F3-1
  - Improved Aircrew Battle Dress Uniform (IABDU) 3-648
  - Modified Enhanced Air Force Flight Suit (MEAFFS) 3-6, F3-1
- CWU-18/P Extreme Cold Weather Trousers 3-81, F3-6
- Finger Light, Self-Contained 8-151
- Flight Clothing, General Purpose 3-1
- Gloves
  - Cotton Work Gloves (Pre-Flight) 3-163, F3-12
  - GS/FRP-2 Fire-Resistant Flyer's Gloves 3-289, F3-19
  - HAU-6/P Lined Gloves 3-308, F3-20
  - HAU-12/P Anti-Exposure Mittens 3-593, F3-34
  - HAU-14/P Cold/Wet Protective Flyer's Gloves 3-538, F3-32
  - HAU-15/P Intermediate Cold Weather Flyer's Gloves 3-556, F3-27
  - Heavy Duty Leather Gloves 3-575
  - Silk Glove Liners 3-521, F3-31
- Hoods
  - Anti-Flash Hood 3-330, F3-21
  - HGU-32/P Anti-Exposure Hood 3-347, F3-22
- Insoles, Insulating 3-488, F3-29
- Jackets
  - CWU-36/P Summer Flyer's Jacket 3-61, F3-5
  - CWU-45/P Cold Weather Flyer's Jacket 3-119, F3-8
  - Intermediate Flyer's Jacket, Type G-1 . . . . . 3-101, F3-7

ALPHABETICAL INDEX (Cont)

Subject — Paragraph, Figure, Table Number

D (Cont)

Description (Cont)
- Leakage Tester, TTU-551/E 4-124, F4-6
- Leak Test Fixture, Anti-Exposure Assemblies 5-242, F5-36
- Leak Test Fixture, Anti-g Garment 4-35, F4-8
- Liners
  - Cold Weather Fiber Pile Liners 3-366, F3-23
  - CWU-9/P Cold Weather Liners 3-385, F3-24
  - CWU-23/P Liner 3-404, F3-25
  - CWU-72/P Liner 3-426, F3-26
  - CWU-81/P Liner, Shirt 3-447, F3-27
  - CWU-82/P Liner, Drawers 3-447, F3-27
- Multi-Climate Protection System (MCPS) 3-629
- Navy Combat Edge Aircrew Protective Assembly, A/P22P-16 . . . . . 9-1, F9-1
- Slip Protectors 3-505, F3-30
- Socks, All Weather 3-468, F3-28
- Spectacles
  - Darkness Adaptation Spectacles 8-81, F8-11
  - EDU-1/P Neodymium Laser Protective Spectacles 8-92, F8-12
  - EDU-5/P Laser Eye Protection Spectacles 8-118, F8-14
  - FV2 Laser Eye Protection Spectacles 8-103, F8-13
  - HGU-4/P Sun Glasses 8-70, F8-10
- Survival Vests
  - CMU-21/P22P-7(V) Survival Vest 6-46
  - CMU-23A/P Survival Vest 6-58, F6-28
  - CMU-24/P Survival Vest 6-88, F6-35
  - CMU-29(V)2/P CBR Overvest 6-115, F6-40, F6-41
  - CMU-30/P22P-15 Survival Vest 7-6, F7-1
  - SV-2B Survival Vest 6-1, F6-1, F6-2, F6-3
- Underwear
  - CWU-43/P Drawers, Cold Weather Underwear 3-142, F3-10
  - CWU-44/P Undershirt, Cold Weather Underwear 3-142, F3-11
- U.S.I.A. Military Exotherm Fleece Jumpsuit (SAR Swimmers Only) 3-614
- Watch, Aviator's Wrist 8-60, F8-9

Disposal
- Spectacles
  - EDU-5/P Laser Eye Protection Spectacles 8-141
    - Frame Assembly 8-143
    - Lenses 8-142
    - Sun Insert 8-143
  - FV2 Laser Eye Protection Spectacles 8-116
  - FV-9 Laser Eye Protective Spectacles 8-180
- Survival Vests
  - CMU-23A/P Survival Vest
    - SRU-36/P HEED 6-84
  - CMU-30/P22P-15 Survival Vest
    - SRU-36/P HEED 7-46

ALPHABETICAL INDEX (Cont)

Subject — Paragraph, Figure, Table Number

D (Cont)

Doffing
- Anti-Exposure Assemblies
  - A/P22P-6 Constant Wear Anti-Exposure Apparel 5-78
  - A/P22P-17 Passenger Anti-Exposure Apparel 5-25
  - Aviation Rescue Swimmer's Drysuit (ARSD) MSD560 and MSD565 . . . . . 5-175X
  - CWU-83/P Anti-Exposure Ensemble 5-45N
- Coveralls
  - OTS-600 Dry Suit, Style 601GBR005B 5-267, 5-269

Donning
- Anti-Exposure Assemblies
  - A/P22P-6 Constant Wear Anti-Exposure Apparel 5-76
  - A/P22P-7(V) Quick Donning Anti-Exposure Apparel 5-154
    - CWU-60/P Coverall 5-156
  - A/P22P-17 Passenger Anti-Exposure Apparel 5-23
- Coveralls
  - Aviation Rescue Swimmer's Drysuit (ARSD) MSD560 and MSD565 . . . . . 5-175V
  - CWU-83/P Anti-Exposure Ensemble 5-45M, F5-4B
  - OTS-600 Dry Suit, Style 601GBR005B 5-267, 5-268
- Survival Vests
  - SV-2B Survival Vest 6-15
    - PCU-Series Torso Harness and LPA/LPU Life Preserver 6-18, F6-9
    - PCU-Series Torso Harness with Attached LPFC Flotation Collar 6-18A
    - SV-2B, LPA/LPU Life Preserver and PCU-Series Torso Harness 6-17, F6-8

E

F

Fabrication
- Anti-Exposure Assemblies
  - A/P22P-6 Constant Wear Anti-Exposure Apparel 5-97, T5-8
  - A/P22P-7(V) Quick Donning Anti-Exposure Apparel 5-168, T5-15
    - Reflective Tape Assembly 5-173
  - Aviation Rescue Swimmer's Drysuit (ARSD) MSD560 and MSD565 . . . . . 5-175AW
  - Wet Suit, Non-Vented Commercial 5-135, T5-13
- Anti-g Garments
  - CSU-13B/P, Leg Restraint Pass-Through Opening in Leg Pocket 4-13A
  - CSU-21/P22P-16 Counter Pressure Vest T4-9
    - Stowage Loop F4-7
- Body Armor
  - PRU-60/P22P-15 Soft Body Armor
    - Beaded Pull Handle 7-76, F7-18
    - H-Harness 7-75, F7-17
    - Quick Disconnect Strap Assembly 7-77, F7-19
  - PRU-61/P22P-15 Hard Body Armor
    - Back Hard Armor Retaining Strap 7-78, F7-20
    - Beaded Pull Handle 7-76, F7-18

ALPHABETICAL INDEX (Cont)

Subject	Paragraph, Figure, Table Number
F (Cont)	
Fabrication (Cont)	
Coveralls	
CWU-27/P Flyer's Summer Coverall	T3-4
Leg Closure Hook and Pile Fastener	3-33
Pencil Pocket Protective Flap	T3-4
CWU-36/P Summer Flyer's Jacket	3-29, T3-9
Pencil Pocket Protective Flap	T3-4, T3-9
CWU-45/P Cold Weather Flyer's Jacket	3-29, T3-4, T3-15
Pencil Pocket Protective Flap	T3-4, T3-15
CWU-64/P Cold Weather Flyer's Coverall	3-29, 3-54, T3-7
Pencil Pocket Protective Flap	T3-7
CWU-73/P Flyer's Summer Coverall	T3-4
Pencil Pocket Protective Flap	T3-4
Enhanced Air Force Flight Suit (EAFFS)	T3-4
Pencil Pocket Protective Flap	T3-4
Modified Enhanced Air Force Flight Suit (MEAFFS)	3-29, T3-4
Pencil Pocket Protective Flap	3-29, T3-4
Survival Vests	
CMU-21/P22P-7(V) Survival Vest	T6-5
Extension Panel	6-56
Helicopter Rescue Strap	6-57
CMU-23A/P Survival Vest	
Battery Pocket	6-87H, F6-34Y, F6-34Z, F6-34AA, F6-34AB
CBR Pistol Pocket Snap Fastener Panel	6-87C, F6-34A, F6-34B, F6-34C
CBR Vest Snap Fastener Panel	6-87D, F6-34D, F6-34E, F6-34F
HEED Tether	6-41
Hose Pocket Panel (HABD)	6-77, F6-33
Hose Pocket Panel (HABD)	6-73, F6-32
Knife Pocket	6-87F, F6-34J, F6-34N, F6-34P, F6-34Q, F6-34R, F6-34S
MK-79 Flare Pocket	6-87E, F6-34G, F6-34H, F6-34J, F6-34K, F6-34L, F6-34M
Pusher Fan Pocket	6-87G, F6-34T, F6-34U, F6-34V, F6-34W, F6-34X
SRU-36 HEED Bottle Pocket	6-87J, F6-34AC, F6-34AD, F6-34AE, F6-34AF, F6-34AG
SRU-40/P HABD Bottle Neck Strap	6-75, F6-31
SRU-40/P HABD Bottle Pocket Panel	6-72, F6-31
SRU-40/P HABD Pocket Assembly	6-71
CMU-24/P Survival Vest	6-94
Signal Flare Keeper	6-113
Vest Pockets	F6-36, F6-37, T6-7
CMU-30/P22P-15 Survival Vest	T7-2
Hose Pocket Panel (CBR)	7-39, F7-12
Hose Pocket Panel (Non-CBR)	7-35, F7-11
SDU-39/N Distress Strobe Light Lanyard	7-50, F7-14
SRU-40/P HABD Bottle Neck Strap	7-37, F7-10
SRU-40/P HABD Bottle Pocket Panel	7-34, F7-10
SRU-40/P HABD Pocket Assembly	7-33
SV-2B Survival Vest	6-28, T6-3
Flashlight Attachment Straps	6-34A, F6-12A
Hands Free Hydration System/Optional Equipment Pocket	6-57A, F6-25A
HEED Tether	6-41
Helicopter Rescue Strap	6-37, F6-15, F6-16

ALPHABETICAL INDEX (Cont)

Subject — Paragraph, Figure, Table Number

F (Cont)

Fabrication (Cont)
Survival Vests (Cont)
SV-2B Survival Vest (Cont)
Oxygen Hose Securing Tab Subassembly 6-39, F6-19
Oxygen Mask Stowage Retaining Snap 6-45
SDU-39/N Distress Strobe Light Lanyard 6-43, F6-25
SRU-40/P HABD Bottle Pocket 6-30, F6-13
SRU-40/P HABD Hose Pocket Panel 6-31, F6-14
Finger Light, Self-Contained 8-151
Fitting
Anti-Exposure Assemblies
A/P22P-6 Constant Wear Anti-Exposure Apparel 5-70
CWU-27/P Summer Flyer's Coverall 5-74
CWU-62/P Anti-Exposure Coverall 5-71
CWU-62A/P Anti-Exposure Coverall 5-71
CWU-62B/P Anti-Exposure Coverall 5-71
CWU-81/P Liner, Shirt 3-453, T3-22
CWU-82/P Liner, Drawers 3-453, T3-23
CWU-83/P Anti-Exposure Ensemble 5-45K, T5-1
CWU-75/P Anti-Exposure Socks 5-73, T5-6, T5-7
SRU-25/P Rubber Socks 5-73, T5-6, T5-7
A/P22P-7(V) Quick Donning Anti-Exposure Apparel 5-155
A/P22P-17 Passenger Anti-Exposure Apparel 5-21
Aviation Rescue Swimmer's Drysuit (ARSD) MSD560 and MSD565
ARSD Neck and Wrist Seals 5-175T
ARSD Anti-Exposure Socks 5-175U
OTS-600 Dry Suit, Style 601GBR005B 5-264
Neck and Wrist Seals 5-265
Anti-Exposure Socks 5-266
Anti-g Garments
CSU-13B/P Anti-g Garment 4-13
Custom Fit for Large Individual 4-16
Custom Fit for Small Individual 4-15
CSU-15/P Anti-g Garment 4-13
Anti-g Hose Fitting 4-17, F4-5
Custom Fit for Large Individual 4-16
Custom Fit for Small Individual 4-15
Custom Fit Knee Hole Panel 4-16A, F4-4A
CSU-20/P22P-16 Anti-g Garment 4-93
CSU-21/P22P-16 Counter Pressure Vest 4-50
Body Armor
PRU-60/P22P-15 Soft Body Armor 6-24A, 7-59, T7-6
PRU-60A/P22P-15 Soft Body Armor 6-24A
PRU-61/P22P-15 Hard Body Armor 7-59, T7-6
Boots
Aircrew Safety Boots 3-232
Brown Leather Flyer's Boot (Belleville 330 ST) 3-210, T3-14
CSAR Danner Recon Boot 3-189
Desert Tan Flyer's Boot (Belleville 330 DES ST) 3-251
Intermediate Cold Weather Safety Toe Boot 3-276, T3-16

ALPHABETICAL INDEX (Cont)

Subject — Paragraph, Figure, Table Number

F (Cont)

Fitting (Cont)
- Coveralls
  - CWU-27/P Flyer's Summer Coverall . . . 3-13
  - CWU-27/P, Type II, Class 1, Women Flyer's Summer Coverall . . . 3-15, T3-3
  - CWU-64/P Cold Weather Flyer's Coverall . . . 3-42
  - CWU-73/P Flyer's Summer Coverall . . . 3-13
  - CWU-83/P Passenger Anti-Exposure Coverall Ensemble . . . 5-45K, T5-1A
  - Enhanced Air Force Flight Suit (EAFFS) . . . 3-13
  - Improved Aircrew Battle Dress Uniform (IABDU) . . . 3-653, T3-35, T3-36
  - Modified Enhanced Air Force Flight Suit (MEAFFS) . . . 3-13
- Custom Fitting Aircrew Flight Clothing . . . 10-1
  - Custom-Sized Measurement . . . 10-9, F10-2
  - Example of Completed NAVAIR Form 10126/1 . . . 10-24, F10-4
  - Inseam Measuring Device . . . F10-3
  - Ordering Custom Fit Flight Apparel . . . 10-1A
  - Problem Areas . . . 10-7
  - Waistline Location . . . F10-1
- CWU-18/P Extreme Cold Weather Trousers . . . 3-86
- Gloves
  - Cotton Work Gloves (Pre-Flight) . . . 3-168
  - GS/FRP-2 Fire-Resistant Flyer's Gloves . . . 3-295
  - HAU-6/P Lined Gloves . . . 3-314
  - HAU-14/P Cold/Wet Protective Flyer's Gloves . . . 3-543
  - HAU-15/P Intermediate Cold Weather Flyer's Gloves . . . 3-562
  - Heavy Duty Leather Gloves . . . 3-581, T3-28
- Holster, Leather Shoulder . . . 6-24B, F6-9A, F6-9B, F6-9C, F6-9D
- Insoles, Insulating . . . 3-493
- Jackets
  - CWU-36/P Summer Flyer's Jacket . . . 3-66
  - CWU-45/P Cold Weather Flyer's Jacket . . . 3-124
  - Intermediate Flyer's Jacket, Type G-1 . . . 3-106
- Liners
  - Cold Weather Fiber Pile Liners . . . 3-372, T3-18
  - CWU-9/P Cold Weather Liners . . . 3-391
  - CWU-23/P Liner . . . 3-410
  - CWU-72/P Liner . . . 3-432
  - CWU-81/P Liner, Shirt . . . 3-453, T3-22
  - CWU-82/P Liner, Drawers . . . 4-453, T3-23
- Multi-Climate Protection System (MCPS) . . . 3-636, T3-31, T3-32, T3-33, T3-34
- Socks, All Weather . . . 3-474
- Spectacles
  - Darkness Adaptation Spectacles . . . 8-85
  - EDU-1/P Neodymium Laser Protective Spectacles . . . 8-96
  - EDU-5/P Laser Eye Protection Spectacles . . . 8-126
  - FV2 Laser Eye Protection Spectacles . . . 8-109
  - FV-9 Laser Eye Protective Spectacles . . . 8-171
  - HGU-4/P Sun Glasses . . . 8-74

ALPHABETICAL INDEX (Cont)

Subject — Paragraph, Figure, Table Number

F (Cont)

Fitting (Cont)
- Survival Vests
  - CMU-24/P Survival Vest 6-96
  - CMU-29(V)2/P CBR Overvest 6-128, F6-44
  - CMU-30/P22P-15 Survival Vest 7-12
  - SV-2B Survival Vest 6-13
- Underwear
  - CWU-43/P Drawers, Cold Weather Underwear 3-148
  - CWU-44/P Undershirt, Cold Weather Underwear 3-148

Flight Clothing, General Purpose 3-1

Function
- Anti-Exposure Assemblies
  - A/P22P-6 Constant Wear Anti-Exposure Apparel 5-62
    - Emergency Function 5-64
    - Normal Function 5-63
- Watch, Aviator's Wrist 8-64

G

Gloves
- Cotton Work Gloves (Pre-Flight) 3-162, F3-12
- GS/FRP-2 Fire-Resistant Flyer's Gloves 3-289, F3-19
- HAU-6/P Lined Gloves 3-308, F3-20
- HAU-12/P Anti-Exposure Mittens 3-593, F3-34
- HAU-14/P Cold/Wet Protective Flyer's Gloves 3-537, F3-32
- HAU-15/P Intermediate Cold Weather Flyer's Gloves 3-556, F3-33
- Silk Glove Liners 3-520, F3-31
- Heavy Duty Leather Gloves 3-575

H

Hoods
- Anti-Exposure Hood 5-189
- Anti-Flash Hood 3-329, F3-21
- HGU-32/P Anti-Exposure Hood 3-346, F3-22

I

Illustrated Parts Breakdown
- Anti-g Garments
  - CSU-20/P22P-16 Anti-g Garment F4-9
  - CSU-21/P22P-16 Counter Pressure Vest F4-10
- General 2-10
  - Symbols and Abbreviations 2-12
- Group Assembly Parts List (GAPL) 2-13
  - Description Column 2-17
  - Figure and Index Number Column 2-15
  - Part Number Column 2-16
  - Units per Assembly Column 2-20
  - Usable On Code Column 2-21

ALPHABETICAL INDEX (Cont)

Subject — Paragraph, Figure, Table Number

I (Cont)

Illustrated Parts Breakdown (Cont)
- Leak Test Fixture, Anti-Exposure Assemblies F5-27, F5-36
- Leak Test Fixture, Anti-g Garment F4-8
- Spectacles
  - EDU-5/P Laser Eye Protection Spectacles 8-144, F8-17
- Numerical Index 2-22
  - Figure and Index Number Column 2-25
  - Part Number Column 2-24
  - Source, Maintenance and Recoverability (SM&R) Code Column 2-26, T2-1

Improved Aircrew Battle Dress Uniform (IABDU) 3-647, F3-44, F3-45
Insoles, Insulating 3-487, F3-29
Inspection
- Boots
  - Aircrew Safety Boots 3-238
  - Brown Leather Flyer's Boot (Belleville 330 ST) 3-218
  - CSAR Danner Recon Boot 3-197
  - Desert Tan Flyer's Boot (Belleville 330 DES ST) 3-259
  - Intermediate Cold Weather Safety Toe Boots 3-282
- Coveralls
  - CWU-27/P Flyer's Summer Coverall 3-20
  - CWU-64/P Cold Weather Flyer's Coverall 3-48
  - CWU-73/P Flyer's Summer Coverall 3-20
  - Enhanced Air Force Flight Suit (EAFFS) 3-20
  - Improved Aircrew Battle Dress Uniform (IABDU) 3-660
  - Modified Enhanced Air Force Flight Suit (MEAFFS) 3-20
- CWU-18/P Extreme Cold Werather Trousers 3-92
- Gloves
  - Cotton Work Gloves (Pre-Flight) 3-174
  - GS/FRP-2 Fire-Resistant Flyer's Gloves 3-301
  - HAU-6/P Lined Gloves 3-320
  - HAU-12/P Anti-Exposure Mittens 3-603
  - HAU-14/P Cold/Wet Protective Flyer's Glove 3-549
  - HAU-15/P Intermediate Cold Weather Flyer's Gloves 3-568
  - Heavy Duty Leather Gloves 3-587
  - Silk Glove Liners 3-530
- Hoods
  - Anti-Flash Hood 3-339
  - HGU-32/P Anti-Exposure Hood 3-356
- Insoles, Insulating 3-487
- Jackets
  - CWU-36/P Summer Flyer's Jacket 3-72
  - CWU-45/P Cold Weather Flyer's Jacket 3-130
  - Intermediate Flyer's Jacket, Type G-1 3-112
- Liners
  - Cold Weather Fiber Pile Liners 3-378
  - CWU-9/P Cold Weather Liners 3-397
  - CWU-23/P Liner 3-416
  - CWU-72/P Liner 3-438
  - CWU-81/P Liner, Shirt 3-459
  - CWU-82/P Liner, Drawers 3-459

ALPHABETICAL INDEX (Cont)

Subject — Paragraph, Figure, Table Number

I (Cont)

Inspection (Cont)
- Multi-Climate Protection System (MCPS) . . . 3-640
- Slip Protector . . . 3-515
- Socks, All Weather . . . 3-499
- U.S.I.A. Military Exotherm Fleece Jumpsuit (SAR Swimmer Only) . . . 3-620
- Underwear
  - CWU-43/P Cold Weather Underwear . . . 3-154
  - CWU-44/P Cold Weather Underwear . . . 3-154
- 360-Day Inspection
  - Anti-Exposure Assemblies
    - A/P22P-6 Constant Wear Anti-Exposure Apparel . . . 5-89
    - A/P22P-17 Passenger Anti-Exposure Apparel . . . 5-33
    - CWU-83/P Anti-Exposure Coverall Ensemble . . . 5-45V
    - OTS-600 Dry Suit, Style 601GBR005B . . . 5-283
  - Boots
    - Aircrew Safety Boots . . . 3-242
    - Brown Leather Flyer's Boot (Belleville 330 ST) . . . 3-222
    - CSAR Danner Recon Boot . . . 3-201
    - Desert Tan Flyer's Boot (Belleville 330 DES ST) . . . 3-263
    - Intermediate Cold Weather Safety Toe Boots . . . 3-286
  - Coveralls
    - CWU-27/P Flyer's Summer Coverall . . . 3-24
    - CWU-64/P Cold Weather Flyer's Coverall . . . 3-52
    - CWU-73/P Flyer's Summer Coverall . . . 3-24
    - Enhanced Air Force Flight Suit (EAFFS) . . . 3-24
    - Improved Aircrew Battle Dress Uniform (IABDU) . . . 3-663
    - Modified Enhanced Air Force Flight Suit (MEAFFS) . . . 3-24
  - CWU-18/P Extreme Cold Werather Trousers . . . 3-96
  - Gloves
    - Cotton Work Gloves (Pre-Flight) . . . 3-178
    - GS/FRP-2 Fire-Resistant Flyer's Gloves . . . 3-305
    - HAU-6/P Lined Gloves . . . 3-324
    - HAU-12/P Anti-Exposure Mittens . . . 3-603
    - HAU-14/P Cold/Wet Protective Flyer's Glove . . . 3-553
    - HAU-15/P Intermediate Cold Weather Flyer's Gloves . . . 3-572
    - Heavy Duty Leather Gloves . . . 3-591
    - Silk Glove Liners . . . 3-534
  - Hoods
    - Anti-Flash Hood . . . 3-343
    - HGU-32/P Anti-Exposure Hood . . . 3-360
  - Insoles, Insulating . . . 3-503
  - Jackets
    - CWU-36/P Summer Flyer's Jacket . . . 3-76
    - CWU-45/P Cold Weather Flyer's Jacket . . . 3-134
    - Intermediate Flyer's Jacket, Type G-1 . . . 3-116
  - Liners
    - Cold Weather Fiber Pile Liners . . . 3-382
    - CWU-9/P Cold Weather Liners . . . 3-401
    - CWU-23/P Liner . . . 3-420
    - CWU-72/P Liner . . . 3-442

ALPHABETICAL INDEX (Cont)

Subject — Paragraph, Figure, Table Number

I (Cont)

Inspection (Cont)
- 360-Day Inspection (Cont)
  - Liners (Cont)
    - CWU-81/P Liner, Shirt 3-463
    - CWU-82/P Liner, Drawers 3-463
  - Multi-Climate Protection System (MCPS) 3-643
  - Slip Protector 3-519
  - Socks, All Weather 3-484
  - U.S.I.A. Military Exotherm Fleece Jumpsuit (SAR Swimmer Only) 3-624
  - Underwear
    - CWU-43/P Cold Weather Underwear 3-158
    - CWU-44/P Cold Weather Underwear 3-158
- Acceptance Inspection
  - Body Armor
    - PRU-60/P22P-15 Soft Body Armor 7-63
    - PRU-61/P22P-15 Hard Body Armor 7-63
  - Spectacles
    - EDU-5/P Laser Eye Protection Spectacles 8-136
  - Survival Vests
    - CMU-30/P22P-15 Survival Vest 7-21
- Place-In-Service Inspection
  - Anti-Exposure Assemblies
    - A/P22P-6 Constant Wear Anti-Exposure Apparel 5-87
    - A/P22P-7(V) Quick Donning Anti-Exposure Apparel 5-161
    - A/P22P-17 Passenger Anti-Exposure Apparel 5-32
    - Aviation Rescue Swimmer's Drysuit (ARSD) MSD560 and MSD565 . . . . . 5-175AJ
    - CWU-83/P Anti-Exposure Coverall Ensemble 5-45S
    - OTS-600 Dry Suit, Style 601GBR005B 5-280
  - Anti-g Garments
    - CSU-20/P22P-16 Anti-g Garment 4-100
    - CSU-21/P22P-16 Counter Pressure Vest 4-56
  - Boots
    - Aircrew Safety Boots 3-240
    - Brown Leather Flyer's Boot (Belleville 330 ST) 3-220
    - CSAR Danner Recon Boot 3-199
    - Desert Tan Flyer's Boot (Belleville 330 DES ST) 3-261
    - Intermediate Cold Weather Safety Toe Boots 3-284
  - Coveralls
    - CWU-27/P Flyer's Summer Coverall 3-22
    - CWU-64/P Cold Weather Flyer's Coverall 3-50
    - CWU-73/P Flyer's Summer Coverall 3-22
    - Enhanced Air Force Flight Suit (EAFFS) 3-22
    - Improved Aircrew Battle Dress Uniform (IABDU) 3-661
    - Modified Enhanced Air Force Flight Suit m(MEAFFS) 3-22
  - CWU-18/P Extreme Cold Weather Trousers 3-94
  - Gloves
    - Cotton Work Gloves (Pre-Flight) 3-176
    - GS/FRP-2 Fire-Re4sistaqnt Flyer's Glovers 3-303
    - HAU-6/P Lined Gloves 3-322
    - HAU-12/P Anti-Exposure Mittens 3-605

ALPHABETICAL INDEX (Cont)

Subject — Paragraph, Figure, Table Number

I (Cont)

Inspection (Cont)
- Place-In-Service Inspection (Cont)
  - Gloves (Cont)
    - HAU-14/P Cold/Wet Protective Flyer's Glove . . . 3-551
    - HAU-15/P Intermediate Cold Weather Flyer's Gloves . . . 3-570
    - Heavy Duty Leather Gloves . . . 3-589
    - Silk Glove Liners . . . 3-532
  - Hoods
    - Anti-Flash Hood . . . 3-341
    - HGU-32/P Anti-Exposure Hood . . . 3-358
  - Insoles, Insulating . . . 3-501
  - Jackets
    - CWU-36/P Summer Flyer's Jacket . . . 3-74
    - CWU-45/P Cold Weather Flyer's Jacket . . . 3-132
    - Intermediate Flyer's Jacket, Type G-1 . . . 3-114
  - Liners
    - Cold Weather Fiber Pile Liners . . . 3-380
    - CWU-9/P Cold Weather Liners . . . 3-399
    - CWU-23/P Liner . . . 3-418
    - CWU-72/P Liner . . . 3-440
    - CWU-81/P Liner, Shirt . . . 3-461
    - CWU-82/P Liner, Drawers . . . 3-461
  - Multi-Climate Protection System (MCPS) . . . 3-641
  - Slip Protector . . . 3-517
  - Socks, All Weather . . . 3-482
  - Spectacles
    - EDU-5/P Laser Eye Protection Spectacles . . . 8-133
    - FV-9 Laser Eye Protective Spectacles . . . 8-177
  - Survival Vests
    - CMU-29(V)2/P CBR Overvest . . . 6-134
  - Underwear
    - CWU-43/P Cold Weather Underwear . . . 3-156
    - CWU-44/P Cold Weather Underwear . . . 3-156
  - U.S.I.A. Military Exotherm Fleece Jumpsuit (SAR Swimmers Only) . . . 3-622
- Pre-Initial Issue Inspection
  - Anti-Exposure Assemblies, CWU-62/P and CWU-62A/P . . . 5-86
- Pre-Installation Inspection
  - Replacement Neck and Wrist Seals . . . 5-38
- Preflight/Postflight Inspection
  - Anti-Exposure Assemblies
    - A/P22P-6 Constant Wear Anti-Exposure Apparel . . . 5-84, 5-85
    - A/P22P-17 Passenger Anti-Exposure Apparel . . . 5-30, 5-31
    - Aviation Rescue Swimmer's Drysuit (ARSD) MSD560 and MSD565 . . . 5-175AG, 5-175AH
    - CWU-83/P Anti-Exposure Coverall Ensemble . . . 5-45T, 5-45U
    - OTS-600 Dry Suit, Style 601GBR005B . . . 5-277, 5-278
    - Wet Suit, Non-Vented Commercial . . . 5-129, 5-131
  - Anti-g Garments
    - CSU-13B/P Anti-g Garment . . . 4-23
    - CSU-15/P Anti-g Garment . . . 4-23
    - CSU-20/P22P-16 Anti-g Garment . . . 4-101
    - CSU-21/P22P-16 Counter Pressure Vest . . . 4-57

ALPHABETICAL INDEX (Cont)

Subject — Paragraph, Figure, Table Number

I (Cont)

Inspection (Cont)
- Preflight/Postflight Inspection (Cont)
  - Boots
    - Aircrew Safety Boots . . . 3-241
    - Brown Leather Flyer's Boot (Belleville 330 ST) . . . 3-221
    - CSAR Danner Recon Boot . . . 3-200
    - Desert Tan Flyer's Boot (Belleville 330 DES ST) . . . 3-262
    - Intermediate Cold Weather Safety Toe Boots . . . 3-285
  - Coveralls
    - CWU-27/P Flyer's Summer Coverall . . . 3-23
    - CWU-64/P Cold Weather Flyer's Coverall . . . 3-51
    - CWU-73/P Flyer's Summer Coverall . . . 3-23
    - Enhanced Air Force Flight Suit (EAFFS) . . . 3-23
    - Improved Aircrew Battle Dress Uniform (IABDU) . . . 3-662
    - Modified Enhanced Air Force Flight Suit m(MEAFFS) . . . 3-23
  - CWU-18/P Extreme Cold Weather Trousers . . . 3-95
  - Finger Light, Self-Contained . . . 8-162
  - Gloves
    - Cotton Work Gloves (Pre-Flight) . . . 3-177
    - GS/FRP-2 Fire-Re4sistaqnt Flyer's Glovers . . . 3-304
    - HAU-6/P Lined Gloves . . . 3-323
    - HAU-12/P Anti-Exposure Mittens . . . 3-606
    - HAU-14/P Cold/Wet Protective Flyer's Glove . . . 3-552
    - HAU-15/P Intermediate Cold Weather Flyer's Gloves . . . 3-571
    - Heavy Duty Leather Gloves . . . 3-590
    - Silk Glove Liners . . . 3-533
  - Hoods
    - Anti-Flash Hood . . . 3-342
    - HGU-32/P Anti-Exposure Hood . . . 3-359
  - Insoles, Insulating . . . 3-502
  - Jackets
    - CWU-36/P Summer Flyer's Jacket . . . 3-75
    - CWU-45/P Cold Weather Flyer's Jacket . . . 3-133
    - Intermediate Flyer's Jacket, Type G-1 . . . 3-115
  - Liners
    - Cold Weather Fiber Pile Liners . . . 3-381
    - CWU-9/P Cold Weather Liners . . . 3-400
    - CWU-23/P Liner . . . 3-419
    - CWU-72/P Liner . . . 3-441
    - CWU-81/P Liner, Shirt . . . 3-462
    - CWU-82/P Liner, Drawers . . . 3-462
  - Multi-Climate Protection System (MCPS) . . . 3-642
  - Slip Protector . . . 3-518
  - Socks, All Weather . . . 3-483
  - Underwear
    - CWU-43/P Cold Weather Underwear . . . 3-157
    - CWU-44/P Cold Weather Underwear . . . 3-157
  - U.S.I.A. Military Exotherm Fleece Jumpsuit (SAR Swimmers Only) . . . 3-623

ALPHABETICAL INDEX (Cont)

Subject — Paragraph, Figure, Table Number

I (Cont)

Inspection (Cont)
- Service Life
  - Anti-Exposure Assemblies
    - A/P22P-6 Constant Wear Anti-Exposure Apparel 5-83
    - A/P22P-17 Passenger Anti-Exposure Apparel 5-34
    - Wet Suit, Non-Vented Commercial 5-128
  - Anti-g Garments
    - CSU-13B/P Anti-g Garment 4-26
    - CSU-15/P Anti-g Garment 4-26
    - CSU-20/P22P-16 Anti-g Garment 4-105
    - CSU-21/P22P-16 Counter Pressure Vest 4-48
- Special Inspection
  - Anti-Exposure Assemblies
    - A/P22P-6 Constant Wear Anti-Exposure Apparel (180-Day) 5-88
    - A/P22P-7(V) Quick Donning Anti-Exposure Apparel 5-162
    - Aviation Rescue Swimmer's Drysuit (ARSD) MSD560 and MSD565 (180-Day) 5-175AN
    - Aviation Rescue Swimmer's Drysuit (ARSD) MSD560 and MSD565 (360-Day) 5-175AP
    - OTS-600 Dry Suit, Style 601GBR005B (180-Day) 5-281, 5-282
    - Wet Suit, Non-Vented Commercial 5-132
  - Anti-g Garments
    - CSU-13B/P Anti-g Garment 4-24
    - CSU-15/P Anti-g Garment 4-24
    - CSU-20/P22P-16 Anti-g Garment (90-Day) 4-102
    - CSU-20/P22P-16 Anti-g Garment (360-Day) 4-102A
    - CSU-21/P22P-16 Counter Pressure Vest (90-Day) 4-59
    - CSU-21/P22P-16 Counter Pressure Vest (360-Day) 4-59A
  - Body Armor
    - PRU-60/P22P-15 Soft Body Armor 7-63
    - PRU-61/P22P-15 Hard Body Armor 7-63
  - Finger Light, Self-Contained 8-163
  - Spectacles
    - EDU-5/P Laser Eye Protection Spectacles 8-133
    - FV-9 Laser Eye Protective Spectacles 8-177
  - Survival Vests
    - CMU-24/P Survival Vest 6-106
    - CMU-29(V)2/P CBR Overvest 6-134
    - CMU-30/P22P-15 Survival Vest 7-21
    - SV-2B Survival Vest 6-23
- Visual Inspection
  - Anti-g Garments
    - CSU-20/P22P-16 Anti-g Garment 4-103
    - CSU-21/P22P-16 Counter Pressure Vest 4-58
  - Finger Light, Self-Contained 8-164
  - Improved Aircrew Battle Dress Uniform (IABDU) 3-664
  - Multi-Climate Protection System (MCPS) 3-644
  - Spectacles
    - FV-9 Laser Eye Protective Spectacles 8-178
  - Survival Vests
    - CMU-29(V)2/P CBR Overvest 6-135

ALPHABETICAL INDEX (Cont)

Subject — Paragraph, Figure, Table Number

I (Cont)

Installation
- Anti-Exposure Assemblies
  - A/P22P-17 Passenger Anti-Exposure Apparel
    - Neck Seal 5-40
    - Wrist Seal 5-41
  - Wet Suit, Non-Vented Commercial 5-135, T5-13
    - Ventilation System . . . . . 5-139, F5-20 thru F5-23
- Anti-g Garments
  - CSU-20/P22P-16 Anti-g Garment T4-12
    - Anti-g Hose Connector 4-119
    - g-Sense Line 4-122
  - CSU-21/P22P-16 Counter Pressure Vest T4-9
    - Stowage Loop F4-7
    - Vest Supply Hose Assembly 4-79
    - Vest Valve Assembly 4-82
  - CWU-83/P Anti-Exposure Ensemble
    - Neck Seals 5-45AC1
    - Socks 5-45AE
    - Wrist Seals 5-45AD
  - Enhanced Air Force Flight Suit (EAFFS) T3-4
    - Pencil Pocket Protective Flap T3-4
  - Modified Enhanced Air Force Flight Suit (MEAFFS) T3-4
    - Pencil Pocket Protective Flap 3-23
- Spectacles
  - EDU-5/P Laser Eye Protection Spectacles
    - Lenses 8-138, F8-15
    - Retention Lanyard 8-139
- Survival Vests
  - CMU-21/P22P-7(V) Survival Vest T6-5
    - Extension Panel 6-55, F6-26, F6-27
    - Helicopter Rescue Strap Replacement 6-57
    - LPA/LPU Life Preserver 6-16
  - CMU-23A/P Survival Vest
    - Hook Tape to CBR Pusher Fan Pocket 6-83, F6-34
    - Hose Pocket (HABD) 6-80, F6-33
    - Hose Pocket Panel (HABD) to Pistol Pocket 6-74, F6-32
    - SRU-40/P HABD Bottle Neck Strap 6-82, F6-31
    - SRU-40/P HABD Bottle Pocket 6-81, F6-31
  - CMU-24/P Survival Vest
    - Vest Pockets F6-38
  - CMU-29(V)2/P CBR Overvest 6-123
    - CBR Respirator Assemblies 6-124
    - CRU-79/P Oxygen Regulator 6-125, F6-42
    - CRU-82/P Oxygen Regulator 6-126, F6-43
    - CRU-88/P Oxygen Regulator 6-126, F6-43
    - CRU-103/P Oxygen Regulator 6-126, F6-43
    - Flashlight 6-127
    - Hook Blade Knife 6-127

ALPHABETICAL INDEX (Cont)

Subject — Paragraph, Figure, Table Number

I (Cont)

Installation (Cont)
- Survival Vests (Cont)
  - CMU-30/P22P-15 Survival Vest
    - Hook Tape to CBR Fan Battery Pocket 7-45, F7-13
    - Hose Pocket Panel (CBR) 7-42, F7-12
    - Hose Pocket Panel (Non-CBR) 7-36, F7-11
    - LPA-21/P Life Preserver 7-15A
    - SAR Lift Hoist Gated D-Ring F7-8
    - SRU-40/P HABD Bottle Neck Strap 7-44, F7-10
    - SRU-40/P HABD Bottle Pocket Panel 7-43, F7-10
  - SV-2B Survival Vest 6-28, T6-3
    - AN/PRC-112B Survival Radio Pocket 6-45A
    - AN/PRC-149 Survival Radio Pocket 6-45A
    - AN/PRQ-7 Survival Radio Pocket 6-45A
    - Flashlight Attachment Straps 6-34A, F6-12A
    - Helicopter Rescue Strap 6-37, F6-15, F6-16
    - Hook Blade Knife Attachment F6-12
    - LPA/LPU Life Preserver 6-16
    - SDU-39/N Distress Strobe Light Lanyard 6-43, F6-25
    - SDU-5E Distress Signal Light Lanyard F6-11
    - SRU-40/P HABD Bottle Pocket 6-34, F6-13
    - SRU-40/P HABD Hose Pocket Panel 6-32, F6-14

Introduction
- Description of NAVAIR 13-1-6.7-2 1-7
  - Comments and Recommendations 1-13
  - Conflicts and Supersedures 1-9
  - Contents 1-8
  - Engineering Drawings 1-14
  - Quality Assurance 1-16
  - Technical Directives and Forms 1-15
  - Updating 1-12
- General 1-1
- Levels of Maintenance 1-17
- Supplementary Publications 1-19

J

Jackets
- CWU-36/P Summer Flyer's Jacket 3-60, F3-5
- CWU-45/P Cold Weather Flyer's Jacket 3-118, F3-9
  - Attachment of Winter Flyer's Hood 3-140
- Intermediate Flyer's Jacket, Type G-1 . . . . . 3-100, F3-35

Jumpsuit
- U.S.I.A Military Exotherm Fleece Jumpsuit (SAR Swimmers Only) 3-613

K

ALPHABETICAL INDEX (Cont)

Subject	Paragraph, Figure, Table Number
L	
Leak Test	
Gloves	
HAU-12/P Anti-Exposure Mittens	3-609
Test Fixture	3-610
Test Procedure	3-611
Hood	
HGU-32/P Anti-Exposure Hood	3-362
Test Fixture	3-363
Test Procedure	3-364
Leak Test Fixture, Anti-Exposure Assemblies	5-242, F5-36
Leak Test Fixture, Anti-g Garment	4-35, F4-8
Leakage Tester, TTU-551/E	4-124, F4-6
Preoperational Check	4-126
Special Tools	4-128
Liners	
Cold Weather Fiber Pile Liners	3-366, F3-23
CWU-9/P Cold Weather Liners	3-385, F3-24
CWU-23/P Liner	3-404, F3-25
CWU-72/P Liner	3-426, F3-26
CWU-81/P Liner, Shirt	3-447, F3-27
CWU-82/P Liner, Drawers	3-447, F3-27
M	
Maintenance	
Anti-Exposure Assemblies	
A/P22P-6 Constant Wear Anti-Exposure Apparel	5-80
Maintenance Documents	5-82, F5-11, F5-12
A/P22P-7(V) Quick Donning Anti-Exposure Apparel	5-159
A/P22P-17 Passenger Anti-Exposure Apparel	5-27
Maintenance Documents	F5-3
Aviation Rescue Swimmer's Drysuit (ARSD) MSD560 and MSD565	5-175AB
Maintenance Documents	5-175AD
OTS-600 Dry Suit, Style 601GBR005B	5-272, 5-274, F5-31C
Wet Suit, Non-Vented Commercial	5-126
Anti-g Garments	
CSU-13B/P Anti-g Garment	4-21
CSU-15/P Anti-g Garment	4-21
CSU-20/P22P-16 Anti-g Garment	4-96
CSU-21/P22P-16 Counter Pressure Vest	4-52
Body Armor	
PRU-60/P22P-15 Soft Body Armor	7-61
PRU-61/P22P-15 Hard Body Armor	7-61
Boots	
Aircrew Safety Boots	3-236
Brown Leather Flyer's Boot (Belleville 330 ST)	3-216
CSAR Danner Recon Boot	3-195
Desert Tan Flyer's Boot (Belleville 330 DES ST)	3-257
Intermediate Cold Weather Safety Toe Boots	3-280

ALPHABETICAL INDEX (Cont)

Subject — Paragraph, Figure, Table Number

M (Cont)

Maintenance (Cont)
- Concepts . . . 2-1
  - Levels of Maintenance . . . 2-3
  - Naval Aviation Maintenance Program . . . 2-2
  - Qualified Personnel . . . 2-4
- Coveralls
  - CWU-27/P Flyer's Summer Coverall . . . 3-18
  - CWU-64/P Cold Weather Flyer's Coverall . . . 3-46
  - CWU-73/P Flyer's Summer Coverall . . . 3-18
  - CWU-83/P Anti-Exposure Coverall Ensemble . . . 5-45P
  - Enhanced Air Force Flight Suit (EAFFS) . . . 3-18
  - Improved Aircrew Battle Dress Uniform (IABDU) . . . 3-658
  - Modified Enhanced Air Force Flight Suit (MEAFFS) . . . 3-18
- CWU-18/P Extreme Cold Weather Trousers . . . 3-90
- Documents . . . 2-7
  - Documenting Maintenance Actions . . . 2-8
  - Maintenance Documents . . . 2-9
- Finger Light, Self-Contained . . . 8-159
- Gloves
  - Cotton Work Gloves (Pre-Flight) . . . 3-172
  - GS/FRP-2 Fire-Resistant Flyer's Gloves . . . 3-299
  - HAU-6/P Lined Gloves . . . 3-318
  - HAU-12/P Anti-Exposure Mittens . . . 3-601
  - HAU-14/P Cold/Wet Protective Flyer's Gloves . . . 3-547
  - HAU-15/P Intermediate Cold Weather Flyer's Gloves . . . 3-566
  - Heavy Duty Leather Gloves . . . 3-585
  - Silk Glove Liners . . . 3-528
- Hoods
  - Anti-Flash Hood . . . 3-337
  - HGU-32/P Anti-Exposure Hood . . . 3-354
- Insoles, Insulating . . . 3-497
- Jackets
  - CWU-36/P Summer Flyer's Jacket . . . 3-70
  - CWU-45/P Cold Weather Flyer's Jacket . . . 3-128
  - Intermediate Flyer's Jacket, Type G-1 . . . 3-110
- Liners
  - Cold Weather Fiber Pile Liners . . . 3-376
  - CWU-9/P Cold Weather Liners . . . 3-395
  - CWU-23/P Liner . . . 3-414
  - CWU-72/P Liner . . . 3-436
  - CWU-81/P Liner, Shirt . . . 3-457
  - CWU-82/P Liner, Drawers . . . 3-457
- Multi-Climate Protection System (MCPS) . . . 3-638
- Scheduling . . . 2-5
  - Inspection Cycles . . . 2-6
- Slip Protectors . . . 3-513
- Socks, All Weather . . . 3-478

ALPHABETICAL INDEX (Cont)

Subject — Paragraph, Figure, Table Number

M (Cont)

Maintenance (Cont)
- Spectacles
  - Darkness Adaptation Spectacles . . . 8-89
  - EDU-1/P Neodymium Laser Protective Spectacles . . . 8-100
  - EDU-5/P Laser Eye Protection Spectacles . . . 8-131
    - Maintenance Documents . . . F8-16
  - FV2 Laser Eye Protection Spectacles . . . 8-113
  - FV-9 Laser Eye Protective Spectacles . . . 8-175
  - HGU-4/P Sun Glasses . . . 8-78
- Survival Vests
  - CMU-21/P22P-7(V) Survival Vest . . . 6-54
  - CMU-23A/P Survival Vest . . . 6-67
  - CMU-24/P Survival Vest . . . 6-104
  - CMU-29(V)2/P CBR Overvest . . . 6-132
  - CMU-30/P22P-15 Survival Vest . . . 7-19
  - SV-2B Survival Vest . . . 6-21
- Underwear
  - CWU-43/P Drawers, Cold Weather Underwear . . . 3-152
  - CWU-44/P Undershirt, Cold Weather Underwear . . . 3-152
- U.S.I.A. Military Exotherm Fleece Jumpsuit (SAR Swimmers Only) . . . 3-618
- Watch, Aviator's Wrist . . . 8-68

Modifications
- Anti-Exposure Assemblies
  - A/P22P-6 Constant Wear Anti-Exposure Apparel . . . 5-65, T5-7A
    - Coverall Leg Length Increase . . . 5-113
    - Coverall Sleeve Length Increase . . . 5-114
  - A/P22P-7(V) Quick Donning Anti-Exposure Apparel . . . 5-157, T5-14A
  - A/P22P-17 Passenger Anti-Exposure Apparel . . . 5-19
  - Aviation Rescue Swimmer's Drysuit (ARSD) MSD560 and MSD565 . . . 5-175AA.1, T5-16A
  - OTS-600 Dry Suit, Style 601GBR005B . . . 5-271A
- Anti-g Garments
  - CSU-13B/P Anti-g Garment . . . 4-18, T4-3
  - CSU-15/P Anti-g Garment . . . 4-18, T4-3
  - CSU-20/P22P-16 Anti-g Garment . . . 4-91, T4-10
  - CSU-21/P22P-16 Counter Pressure Vest . . . 4-46, T4-7
- Boots
  - Aircrew Safety Boots . . . 3-234, T3-15
- Coveralls
  - CWU-27/P Flyer's Summer Coverall . . . 3-16
  - CWU-64/P Cold Weather Flyer's Coverall . . . 3-44
  - CWU-73/P Flyer's Summer Coverall . . . 3-16
  - CWU-83/P Passenger Anti-Exposure Coverall Ensemble . . . 5-45H
  - Enhanced Air Force Flight Suit (EAFFS) . . . 3-16
  - Improved Aircrew Battle Dress Uniform (IABDU) . . . 3-656
  - Modified Enhanced Air Force Flight Suit (MEAFFS) . . . 3-16
    - Lower Right Leg Pencil Pocket Closure . . . 3-34, T3-4
- CWU-18/P Extreme Cold Weather Trousers . . . 3-88
- Gloves
  - HAU-12/P Anti-Exposure Mittens . . . 3-600

ALPHABETICAL INDEX (Cont)

Subject — Paragraph, Figure, Table Number

M (Cont)

Modifications (Cont)
- Hoods
  - HGU-32/P Anti-Exposure Hood 3-352
- Jackets
  - CWU-36/P Summer Flyer's Jacket 3-68
  - CWU-45/P Cold Weather Flyer's Jacket 3-126, T3-10
  - Intermediate Flyer's Jacket, Type G-1 3-108
- Multi-Climate Protection System (MCPS) 3-511
- Spectacles
  - Darkness Adaptation Spectacles 8-87
  - EDU-1/P Neodymium Laser Protective Spectacles 8-98
  - EDU-5/P Laser Eye Protection Spectacles 8-129
  - FV2 Laser Eye Protection Spectacles 8-111
  - FV-9 Laser Eye Protective Spectacles 8-173
  - HGU-4/P Sun Glasses 8-76
- Survival Vests
  - CMU-21/P22P-7(V) Survival Vest 6-52, T6-4
  - CMU-23/P Survival Vest
    - CMU-23/P to CMU-23A/P 6-69
  - CMU-23A/P Survival Vest 6-65, T6-6
    - Chemical, Biological, Radiological (CBR) 6-70
  - CMU-24/P Survival Vest 6-102
  - CMU-29(V)2/P CBR Overvest 6-130
  - CMU-30/P22P-15 Survival Vest 7-16
    - CBR Respirator Assembly Accommodation 7-28
  - SV-2B Survival Vest 6-19, T6-2
    - Joint Helmet Cueing System (JHMCS) Quick Disconnect (Q.D.) Fitting Access 6-41A, F6-20
    - Large Frame Pistol Accommodation 6-44
    - Slide Fastener Assembly 6-42
    - SV-2B to CMU-23A/P 6-69
- Underwear
  - CWU-43/P Drawers, Cold Weather Underwear 3-152
  - CWU-44/P Undershirt, Cold Weather Underwear 3-152
- Watch, Aviator's Wrist 8-66
- Multi-Climate Protection System (MCPS) 3-628, F3-35, F3-36, F3-37, F3-38, F3-39, F3-40, F3-41, F3-42, F3-43

N

Navy Combat Edge Aircrew Protective Assembly, A/P22P-16 . . . . . 9-1, F9-1

O

Operation
- Finger Light, Self-Contained 8-157

Optional Leg Closure Hook and Pile Fastener Fabrication 3-35

ALPHABETICAL INDEX (Cont)

Subject	Paragraph, Figure, Table Number
P	
Packing	
Anti-Exposure Assemblies	
A/P22P-7(V) Quick Donning Anti-Exposure Apparel	5-175
Survival Vests	
CMU-24/P Survival Vest	6-100, F6-39
CMU-30/P22P-15 Survival Vest	7-14, F7-1, T7-1
SV-2B Survival Vest	6-25, F6-10
Procurement	
Anti-Exposure Assemblies	
Aviation Rescue Swimmer's Drysuit (ARSD) MSD560 and MSD565	5-175C
OTS-600 Dry Suit, Style 601GBR005B	5-250
U.S.I.A. Military Exotherm Fleece Jumpsuit (SAR Swimmers Only)	3-615
Body Armor	
PRU-60/P22P-15 Soft Body Armor	6-24A
PRU-60A/P22P-15 Soft Body Armor	6-24A
Boots	
Brown Leather Flyer's Boot (Belleville 330 ST)	3-212
CSAR Danner Recon Boot	3-191
Desert Tan Flyer's Boot (Belleville 330 DES ST)	3-253
Holster, Leather Shoulder	6-24B
Q	
R	
Removal	
Anti-Exposure Assemblies	
A/P22P-17 Passenger Anti-Exposure Apparel	
CWU-79/P Neck/Wrist Seals	5-39
Aviation Rescue Swimmer's Drysuit (ARSD) MSD560 and MSD565	
Exhaust Valve	5-175BC
CWU-83/P Anti-Exposure Ensemble	
Neck Seals (Original)	5-45AA
Socks (Original)	5-45AA
Socks (Replacement)	5-45AB
Wrist Seals (Original)	5-45AA
Wrist Seals (Replacement)	5-45AB
Anti-g Garments	
CSU-20/P22P-16 Anti-g Garment	
Anti-g Hose Connector	4-118
g-Sense Line	4-121
CSU-21/P22P-16 Counter Pressure Vest	
Vest Supply Hose Assembly	4-78
Vest Valve Assembly	4-81
Spectacles	
EDU-5/P Laser Eye Protection Spectacles	
Lenses	8-137, F8-15

ALPHABETICAL INDEX (Cont)

Subject — Paragraph, Figure, Table Number

R (Cont)

Removal (Cont)
Survival Vests
CMU-23A/P Survival Vest
SRU-36/P HEED 6-84
CMU-30/P22P-15 Survival Vest
SRU-36/P HEED 7-46
SV-2B Survival Vest
Knife Sheath, Flare Gun and Holster Pocket Assembly 6-40
Repair
Anti-Exposure Assemblies
A/P22P-6 Constant Wear Anti-Exposure Apparel 5-97, T5-8
ARSD/MSD Series Coverall 5-116
CWU-62/P Anti-Exposure Coverall 5-116
CWU-62A/P Anti-Exposure Coverall 5-116
CWU-62B/P Anti-Exposure Coverall 5-116
CWU-79/P Anti-Exposure Coverall 5-116
Large Holes 5-104B
Large Porous Areas 5-104C
Large Tears or Large Rips 5-104A
Loose Seam Tape 5-104E
Original Construction Seam Tape 5-104D
Slide Fastener 5-100
Small Tears, Small Rips, Small Porous Areas and Small Holes (Pinholes) 5-104
Water Seepage at Box Stitching 5-102
A/P22P-7(V) Quick Donning Anti-Exposure Apparel 5-168, T5-15
Cinches 5-174, F5-30
Face Shield, CWU-60/P 5-174A
Glove/Mitten Assembly T5-16
Patching CWU-60/P Hood 5-172
Seam Tape 5-170
Snags, Tears, and Punctures 5-169
Stowage Bag 5-171
Thumb Loop 5-174, F5-30
A/P22P-17 Passenger Anti-Exposure Apparel 5-37
Aviation Rescue Swimmer's Drysuit (ARSD) MSD560 and MSD565 . . . . . 5-175AW, T5-16C, T5-16D
Fabric Body 5-175BQ
Internal Suspenders 5-175BR
Anchor Patch 5-175BT
Slide Fasteners 5-175BG
OTS-600 Dry Suit, Style 601GBR005B 5-254, 5-273, 5-289
Fabric Body 5-299
Slide Fasteners 5-295
Slide Fasteners T-Pulls 5-298
Wet Suit, Non-Vented Commercial 5-135, T5-13
Holes, Tears, and Cracks 5-136
Loose Pile Tape 5-138
Ventilation Duct Tape 5-140
Ventilation Seam Tape 5-140

ALPHABETICAL INDEX (Cont)

Subject — Paragraph, Figure, Table Number

R (Cont)

Repair (Cont)
- Anti-g Garments
  - CSU-13B/P Anti-g Garment . . . 4-27, T4-4
    - Small Holes or Tears . . . 4-28
  - CSU-15/P Anti-g Garment . . . 4-27, T4-4
  - CSU-20/P22P-16 Anti-g Garment . . . 4-107, T4-12
    - Bladder/Bladder Covering . . . 4-111
    - Small Holes or Tears . . . 4-109
  - CSU-21/P22P-16 Counter Pressure Vest . . . 4-68, T4-9
    - Fabric Not Over Bladder Area . . . 4-70
    - Fabric/Stitching Over Bladder Area . . . 4-71
    - Lacing Loop . . . 4-73
    - Slide Fasteners . . . 4-72
- Body Armor
  - PRU-60/P22P-15 Soft Body Armor . . . 7-69
    - Beaded Pull Handle . . . 7-76, F7-18
    - Elastic Cotton Webbing . . . 7-73
    - H-Harness . . . 7-75, F7-17
    - Nylon Webbing Shoulder Straps . . . 7-74
    - Quick Disconnect Strap Assembly . . . 7-77, F7-19
  - PRU-61/P22P-15 Hard Body Armor . . . 7-69
    - Back Hard Armor Retaining Strap . . . 7-78, F7-20
    - Beaded Pull Handle . . . 7-76, F7-18
    - Elastic Cotton Webbing . . . 7-73
    - Nylon Webbing Shoulder Straps . . . 7-74
- Boots
  - Aircrew Safety Boot . . . 3-243
  - Brown Leather Flyer's Boot (Belleville 330 ST) . . . 3-223
    - Resole Option . . . 3-225
  - CSAR Danner Recon Boot . . . 3-202
  - Desert Tan Flyer's Boot (Belleville 330 DES ST) . . . 3-266
    - Resole Option . . . 3-268
  - Intermediate Cold Weather Safety Toe Boot . . . 3-287
- Coveralls
  - CWU-27/P Flyer's Summer Coverall . . . 3-27, T3-4
    - Small Holes or Tears . . . T3-4
  - CWU-64/P Cold Weather Flyer's Coverall . . . 3-54, T3-7
    - Small Holes or Tears . . . T3-7
  - CWU-73/P Flyer's Summer Coverall . . . 3-27, T3-4
    - Small Holes or Tears . . . T3-4
  - CWU-83/P Anti-Exposure Coverall . . . 5-45Z
    - Fabric Body . . . 5-45AH
    - Loose Seam Tape . . . 5-45AG
    - Male/Female Glove Tether Line Retainer Straps . . . 5-45AP
    - Neoprene Seals, Hood and Mittens . . . 5-45AF
    - Slide Fastener . . . 5-45AJ, T5-1B
    - Reinforced Fabric . . . 5-45AM
  - Enhanced Air Force Flight Suit (EAFFS) . . . 3-27, T3-4
    - Small Holes or Tears . . . T3-4
  - Improved Aircrew Battle Dress Uniform (IABDU) . . . 3-666

ALPHABETICAL INDEX (Cont)

Subject — Paragraph, Figure, Table Number

R (Cont)

Repair (Cont)
- Coveralls (Cont)
  - Modified Enhanced Air Force Flight Suit (MEAFFS) . . . 3-27, T3-4
    - Fabrication and Installation of a Pencil Pocket Protective Flap . . . 3-29, T3-4
    - Pencil Pocket Protective Flap Closure . . . 3-30
    - Small Holes or Tears . . . T3-4
- CWU-18/P Extreme Cold Weather Trousers . . . 3-98
- Gloves
  - Cotton Work Gloves (Pre-Flight) . . . 3-181
  - GS/FRP-2 Fire-Resistant Flyer's Gloves . . . 3-307
  - HAU-6/P Lined Gloves . . . 3-326
  - HAU-12/P Anti-Exposure Mittens . . . 3-612
  - HAU-14/P Cold/Wet Protective Flyer's Gloves . . . 3-555
  - HAU-15/P Intermediate Cold Weather Flyer's Gloves . . . 3-574
  - Silk Glove Liners . . . 3-536
- Hoods
  - Anti-Flash Hood . . . 3-345
  - HGU-32/P Anti-Exposure Hood . . . 3-365
- Jackets
  - CWU-36/P Summer Flyer's Jacket . . . 3-29, 3-73, T3-9
    - Small Holes or Tears . . . T3-9
  - CWU-45/P Cold Weather Flyer's Jacket . . . 3-29, 3-136, T3-12
    - Small Holes or Tears . . . T3-14
  - Intermediate Flyer's Jacket, Type G-1 . . . 3-117
- Liners
  - Cold Weather Fiber Pile Liners . . . 3-384
  - CWU-9/P Cold Weather Liners . . . 3-403
  - CWU-23/P Liner . . . 3-422
  - CWU-72/P Liner . . . 3-444
  - CWU-81/P Liner, Shirt . . . 3-465
  - CWU-82/P Liners, Drawers . . . 3-465
- Multi-Climate Protection System (MCPS) . . . 3-376
- Socks, All Weather . . . 3-486
- Survival Vests
  - CMU-24/P Survival Vest . . . 6-110, T6-8
    - Small Holes or Tears . . . T6-8
  - CMU-29(V)2/P CBR Overvest . . . 6-137, T6-10
    - Small Holes or Tears . . . T6-10
  - CMU-30/P22P-15 Survival Vest . . . 7-23, T7-2
    - Back Adjustment Straps . . . 7-25, F7-3
    - Back Flaps for Back Hard Ballistic Armor . . . 7-31, F7-9
    - Hoisting Harness . . . 7-30, F7-7
    - LPU Collar Lobe Attachment . . . 7-26, F7-4
    - Securing Belt Assembly . . . 7-27, F7-5
    - Shoulder Rings . . . 7-29, F7-6
    - Small Holes or Tears . . . T7-2
    - Vest Pockets . . . 7-32, T7-3
  - SV-2B Survival Vest . . . 6-27, T6-3
- U.S.I.A. Military Exotherm Fleece Jumpsuit (SAR Swimmers Only) . . . 3-626

ALPHABETICAL INDEX (Cont)

Subject — Paragraph, Figure, Table Number

R (Cont)

Repair (Cont)
Underwear
CWU-43/P Cold Weather Underwear 3-160
CWU-44/P Cold Weather Underwear 3-160
Replacement
Anti-Exposure Assemblies
A/P22P-6 Constant Wear Anti-Exposure Apparel
CWU-23/P Sleeve Insert 3-423
CWU-62/P Wrist Seal 5-108, T5-10
CWU-62A/P Neck Seal 5-109, F5-17, T5-11
CWU-62A/P Wrist Seal 5-108, T5-10
CWU-62B/P Neck Seal 5-109, F5-17, T5-11
CWU-62B/P Wrist Seal 5-108, T5-10
CWU-75/P Anti-Exposure Socks 5-105
CWU-79/P Neck Seal 5-40
CWU-83/P Anti-Exposure Ensemble 5-45Z
Gaiters 5-45AL
Neck and Wrist Seals and Socks 5-45AA
Relief Valve Diaphragm 5-45AN
Slide Fasteners 5-45AK, T5-1B
Slide Fastener 5-101, T5-9
SRU-25/P Rubber Socks 5-105
Thumb Loop 5-103
A/P22P-17 Passenger Anti-Exposure Apparel 5-36
CWU-79/P Neck Seal 5-40
CWU-79/P Wrist Seal 5-41
Aviation Rescue Swimmer's Drysuit (ARSD) MSD560 and MSD565
Anti-Exposure Socks 5-175BF, T5-16D
Exhaust Valve 5-175BC
Internal Suspenders
Anchor Patch 5-175BT, T5-16D
Buckle 5-175BV, T5-16D
Elastic 5-175BS, T5-16D
Loose or Missing Hook and Pile Tape 5-175BK
Loose or Missing Reflective Tape 5-175BP
Neck Seal 5-175BD, T5-16C
Slide Fasteners 5-175BH, T5-16D
Slide Fastener Toggle Pulls 5-175BN, T5-16D
Wrist Seal 5-175BE, T5-10
OTS-600 Dry Suit, Style 601GBR005B 5-255, 5-273, 5-291
Anti-Exposure Socks 5-295
Neck Seal 5-292, 5-293
Slide Fastener 5-297, T5-22
T-Pulls, Slide Fastener 5-298
Wrist Seals 5-294
Wet Suit, Non-Vented Commercial
Slide Fastener 5-137

ALPHABETICAL INDEX (Cont)

Subject	Paragraph, Figure, Table Number
R (Cont)	
Replacement (Cont)	
Anti-g Garments	
CSU-13B/P Anti-g Garment	T4-4
Hook and Pile Fastener Tape	4-30, T4-6
Lacing Cord	4-31
Metal Hook or Bar Fastener	4-33A
Slide Fastener	4-29, T4-5
CSU-15/P Anti-g Garment	T4-4
Lacing Cord	4-31
Lacing Cover Slide Fastener	4-32
Sliders and Top Stops on Slide Fastener	4-33
CSU-20/P22P-16 Anti-g Garment	T4-12
Anti-g Hose Connector	4-117
Hook and Pile Fastener Tape	4-112
Lacing Cord	4-114
Lacing Cover Hook and Pile Fastener Tape	4-115, T4-13
Slide Fastener	4-113, T4-14
Sliders and Top Stops on Slide Fastener	4-116, T4-14
CSU-21/P22P-16 Counter Pressure Vest	4-68, T4-9
Garment Binding Tape	4-74
Hook and Pile Fastener Tape	4-75
Lacing Cord	4-73
Stowage Loop	4-76, F4-7
Vest Supply Hose Assembly	4-77
Vest Valve Assembly	4-80
Body Armor	
PRU-60/P22P-15 Soft Body Armor	7-69
Elastic Cotton Webbing	7-73
Hook and Pile Fastener Tape	7-71
Nylon Webbing Shoulder Straps	7-74
Snap Fastener	7-72
PRU-61/P22P-15 Hard Body Armor	7-69
Elastic Cotton Webbing	7-73
Hook and Pile Fastener Tape	7-71
Nylon Webbing Shoulder Straps	7-74
Snap Fastener	7-72
Coveralls	
CWU-27/P Flyer's Summer Coverall	T3-4
Center Front Slide Fastener	3-32, T3-5
Hook and Pile Fastener Tape	3-31
Loose or Broken Stitching	T3-4
Lower Leg Pocket Slide Fastener	3-33, T3-5
Snap Fastener	T3-4
CWU-64/P Cold Weather Flyer's Coverall	T3-7
Center Front Slide Fastener	3-57, T3-7
Hook and Pile Fastener Tape	3-56, T3-7
Loose or Broken Stitching	T3-7
Lower Leg Pocket Slide Fastener	3-33, T3-7
Snap Fastener	T3-7

ALPHABETICAL INDEX (Cont)

Subject — Paragraph, Figure, Table Number

R (Cont)

Replacement (Cont)
- Coveralls (Cont)
  - CWU-73/P Flyer's Summer Coverall . . . T3-4
    - Center Front Slide Fastener . . . 3-32, T3-5
    - Hook and Pile Fastener Tape . . . 3-31
    - Loose or Broken Stitching . . . T3-4
    - Lower Leg Pocket Slide Fastener . . . 3-33, F3-6, T3-5
    - Snap Fastener . . . T3-4
  - Enhanced Air Force Flight Suit (EAFFS) . . . T3-4
    - Center Front Slide Fastener . . . 3-32, T3-5
    - Hook and Pile Fastener Tape . . . 3-31
    - Loose or Broken Stitching . . . T3-4
    - Lower Leg Pocket Slide Fastener . . . 3-33, T3-5, F3-2
    - Snap Fastener . . . T3-4
  - Modified Enhanced Air Force Flight Suit (MEAFFS) . . . T3-4
    - Center Front Slide Fastener . . . 3-31, T3-5
    - Closure of Lower Right Leg Pencil Pocket . . . 3-34
    - Hook and Pile Fastener Tape . . . 3-31
    - Loose or Broken Stitching . . . T3-4
    - Lower Leg Pocket Slide Fastener . . . 3-33, T3-5, F3-2
    - Snap Fastener . . . T3-4
- Finger Light, Self-Contained
  - Battery . . . 8-165
- Jackets
  - CWU-36/P Summer Flyer's Jacket . . . T3-9
    - Cuffs . . . T3-9
    - Hook and Pile Fastener Tape . . . T3-9
    - Loose or Broken Stitching . . . T3-9
    - Waistband . . . T3-9
  - CWU-45/P Cold Weather Flyer's Jacket . . . T3-12
    - Cuffs . . . 3-138
    - Hook and Pile Fastener Tape . . . T3-12
    - Loose or Broken Stitching . . . T3-12
    - Waistband . . . 3-139
- Liners
  - CWU-23/P Liner
    - Sleeve Insert . . . 3-423
- Spectacles
  - FRAME, EDU-5/P Laser Eye Protection Spectacles . . . 8-136, F8-15, F8-16
- Survival Vests
  - CMU-21/P22P-7(V) Survival Vest . . . T6-5
    - Helicopter Rescue Strap . . . 6-57
  - CMU-24/P Survival Vest . . . 6-110, T6-8
    - Hook and Pile Fastener Tape . . . T6-8
    - Lacing Cord . . . 6-112
    - Loose or Broken Stitching . . . T6-8
  - CMU-29(V)2/P CBR Overvest . . . 6-137, T6-10
    - Hook and Pile Fastener Tape . . . T6-10
    - Loose or Broken Stitching . . . T6-10
    - Snap Fastener . . . T6-10

ALPHABETICAL INDEX (Cont)

Subject — Paragraph, Figure, Table Number

R (Cont)

Replacement (Cont)
- Survival Vests (Cont)
  - CMU-30/P22P-15 Survival Vest . . . 7-23, T7-2
    - Back Adjustment Straps . . . 7-25, F7-3
    - Back Flaps for Back Hard Ballistic Armor . . . 7-31, F7-9
    - Hoisting Harness . . . 7-30, F7-7
    - Hook and Pile Fastener Tape . . . T7-2
    - Loose or Broken Stitching . . . T7-2
    - LPU Collar Lobe Attachment . . . 7-26, F7-4
    - Securing Belt Assembly . . . 7-27, F7-5
    - Shoulder Rings . . . 7-29, F7-6
    - Snap Fastener . . . T7-2
    - Vest Pockets . . . 7-32, T7-3
- Resole Option
  - Brown Leather Flyer's Boot (Belleville 330 ST) . . . 3-225
- Rigging
  - Survival Vests
    - CMU-24/P Survival Vest . . . 6-100, F6-39
    - CMU-30/P22P-15 Survival Vest . . . 7-14, F7-1, T7-1
    - SV-2B Survival Vest . . . 6-25, F6-10

S

Service Life
- Anti-Exposure Assemblies
  - Aviation Rescue Swimmer's Drysuit (ARSD) MSD560 and MSD565 . . . 5-175AE
  - U.S.I.A. Military Exotherm Fleece Jumpsuit (SAR Swimmers Only) . . . 3-627
- OTS-600 Dry Suit, Style 601GBR005B . . . 5-275

Sizes and Dimensions
- Anti-Exposure Assemblies
  - A/P22P-6 Constant Wear Anti-Exposure Apparel . . . 5-67
    - CWU-23/P Liner . . . T3-21A
    - CWU-62/P Anti-Exposure Coverall . . . T5-5
    - CWU-62A/P Anti-Exposure Coverall . . . T5-5
    - CWU-62B/P Anti-Exposure Coverall . . . T5-5
    - CWU-62C/P Anti-Exposure Coverall . . . T5-5A
    - CWU-72/P Liner . . . T3-21B
    - CWU-75/P Anti-Exposure Socks . . . T5-7
    - CWU-81/P Liner, Shirt . . . T3-21C
    - CWU-82/P Liner, Drawers . . . T3-21D
    - SRU-25/P Rubber Socks . . . T5-6
  - Aviation Rescue Swimmer's Drysuit (ARSD) MSD560 and MSD565 . . . 5-175Q, T5-16B
  - OTS-600 Dry Suit, Style 601GBR005B . . . 5-262, 5-263, T5-18, T5-19, T5-20, T5-21
  - Wet Suit, Non-Vented Commercial . . . T5-12
- Anti-g Garments
  - CSU-13B/P Anti-g Garment . . . T4-2
  - CSU-20/P22P-16 Anti-g Garment . . . T4-11
  - CSU-21/P22P-16 Counter Pressure Vest . . . T4-8

ALPHABETICAL INDEX (Cont)

Subject — Paragraph, Figure, Table Number

S (Cont)

Sizes and Dimensions (Cont)
- Body Armor
  - PRU-60/P22P-15 Soft Body Armor T7-6, T7-7
  - PRU-61/P22P-15 Hard Body Armor T7-6, T7-7
- Boots
  - Brown Leather Flyer's Boots (Belleville 330 ST) T3-14
  - Intermediate Cold Weather Safety Toe Boots T3-16
- Coveralls
  - CWU-27/P Flyer's Summer Coverall 3-9, T3-1, T3-3
  - CWU-64/P Cold Weather Flyer's Coverall T3-6
  - CWU-73/P Flyer's Summer Coverall 3-9, T3-1
  - Enhanced Air Force Flight Suit (EAFFS) 3-9, T3-1
  - Improved Aircrew Battle Dress Uniform (IABDU) T3-35, T3-36
  - Modified Enhanced Air Force Flight Suit (MEAFFS) 3-9, T3-1
- Gloves
  - HAU-14/P Cold/Wet Protective Flyer's Gloves T3-26
  - HAU-15/P Intermediate Cold Weather Flyer's Gloves T3-27
  - Heavy Duty Leather Gloves T3-28
- Jackets
  - CWU-36/P Summer Flyer's Jacket T3-8
  - CWU-45/P Cold Weather Flyer's Jacket T3-10
- Liners
  - Cold Weather Fiber Pile Liners T3-18
  - CWU-9/P Cold Weather Liners T3-19
  - CWU-23/P Liner T3-20
  - CWU-72/P Liner T3-21
  - CWU-81/P Liner, Shirt T3-22
  - CWU-82/P Liner, Drawers T3-23
- Multi-Climate Protection System (MCPS) 3-636, T3-31, T3-32, T3-33, T3-34
- Slip Protectors T3-25
- Socks, All Weather T3-24
- Spectacles
  - EDU-5/P Laser Eye Protection Spectacles T8-3
- U.S.I.A Military Exotherm Fleece Jumpsuit (SAR Swimmer's Only) T3-29
- Underwear
  - CWU-43/P Drawers, Cold Weather Underwear T3-13
  - CWU-44/P Undershirt, Cold Weather Underwear T3-13

Slip Protectors 3-505, F3-30, T3-25
Socks, All Weather 3-468, F3-28
Spectacles
- Darkness Adaptation Spectacles 8-81, F8-11
- EDU-1/P Neodymium Laser Protective Spectacles 8-92, F8-12
- EDU-5/P Laser Eye Protection Spectacles 8-118, F8-14
- FV2 Laser Eye Protection Spectacles 8-103, F8-13
- FV-9 Laser Eye Protective Spectacles 8-166
- HGU-4/P Sun Glasses 8-70, F8-10

ALPHABETICAL INDEX (Cont)

Subject — Paragraph, Figure, Table Number

S (Cont)

Storage
- Anti-Exposure Assemblies
  - A/P22P-6 Constant Wear Anti-Exposure Apparel 5-96, F5-15
  - A/P22P-7(V) Quick Donning Anti-Exposure Apparel 5-167
  - A/P22P-17 Passenger Anti-Exposure Apparel 5-35A
  - Aviation Rescue Swimmer's Drysuit (ARSD) MSD560 and MSD565 . . . . . 5-175AR
    - Long Term Storage 5-175AU
    - Seasonal Storage 5-175AT
    - Short Term Storage 5-175AS
  - CWU-83/P Anti-Exposure Ensemble 5-45Y
  - OTS-600 Dry Suit, Style 601GBR005B 5-283
    - Long Term Storage 5-287
    - Seasonal Storage 5-286
    - Short Term Storage 5-285
  - Wet Suit, Non-Vented Commercial 5-134
- Liners
  - CWU-23/P Liner 3-424
  - CWU-72/P Liner 3-445
  - CWU-81/P Liner, Shirt 3-466
  - CWU-82/P Liner, Drawers 3-466

Stowage
- Anti-Exposure Assemblies
  - A/P22P-17 Passenger Anti-Exposure Apparel
    - HAU-12/P Anti-Exposure Mittens 5-42
    - HGU-32/P Anti-Exposure Hood 5-42
- Survival Vests
  - CMU-21/P22P-7(V) Survival Vest 6-46
  - CMU-23A/P Survival Vest 6-58, F6-28
  - CMU-24/P Survival Vest 6-88, F6-35
  - CMU-29(V)2/P CBR Overvest 6-115, F6-40, F6-41
    - Drawings Index 6-119, T6-9
  - CMU-30/P22P-15 Survival Vest 7-6, F7-2
  - SV-2B Survival Vest 6-1, F6-1, F6-2, F6-3
    - Drawings Index 6-10, T6-1

T

Testing
- Anti-Exposure Assemblies
  - A/P22P-6 Constant Wear Anti-Exposure Apparel
    - Water Test 5-91
    - Water Test Device 5-90, F5-13, F5-14
  - A/P22P-7(V) Quick Donning Anti-Exposure Apparel
    - Leak Test . . . . . 5-163, F5-25 thru F5-29
  - Aviation Rescue Swimmer's Drysuit (ARSD) MSD560 and MSD565
    - Leak Test 5-175AQ
- Anti-g Garments
  - CSU-13B/P Anti-g Garment
    - Leak Test 4-25

ALPHABETICAL INDEX (Cont)

Subject	Paragraph, Figure, Table Number
T (Cont)	
Testing (Cont)	
Anti-g Garments (Cont)	
CSU-15/P Anti-g Garment	
Leak Test	4-25
CSU-20/P22P-16 Anti-g Garment	
Leak Test	4-104
CSU-21/P22P-16 Counter Pressure Vest	
Leak Test	4-60
Gloves	
HAU-12/P Anti-Exposure Mittens	
Leak Test	3-609
Hoods	
HGU-32/P Anti-Exposure Hood	
Leak Test	3-362
Leakage Tester, TTU-551/E	
Preoperational Check	4-126
U	
U.S.I.A. Military Exotherm Fleece Jumpsuit (SAR Swimmers Only)	3-613
Underwear	
CWU-43/P Drawers, Cold Weather Underwear	3-141, F3-10
CWU-44/P Undershirt, Cold Weather Underwear	3-141, F3-11
V	
W	
Warranty Information	
Aviation Rescue Swimmer's Drysuit (ARSD) MSD560 and MSD565	5-175Z
OTS-600 Dry Suit, Style 601GBR005B	5-253, 5-270, 5-271, 5-290
Watch, Aviator's Wrist	8-60, F8-9
Winter Flyer's Suit	3-58
X	
Y	
Z	