TECHNICAL MANUAL

AVIATION-CREW SYSTEMS

RESCUE AND SURVIVAL EQUIPMENT

This manual update includes Basic, dated 1 August 2004 thru Change 5, dated 1 April 2007.

DISTRIBUTION STATEMENT C. Distribution authorized to U.S. Government agencies only and their contractors to protect publications required for official use or for administrative or operational purposes only, determined on 1 August 2004. Other requests for this document shall be referred to Department of the Navy, Commander, Attn: PMA-202, Bldg. 2272, Suite 347, COMNAVAIRSYSCOMHQ, RADM William A. Moffett Building, 47123 Buse Road, Patuxent River, MD 20670-1547.

DESTRUCTION NOTICE — For unclassified, limited documents, destroy by any method that will prevent disclosure of contents or reconstruction of the document.

Published by Direction of the Commander, Naval Air Systems Command

0813LP1062545

1 August 2004
Change 5 - 1 April 2007

LIST OF EFFECTIVE PAGES

Insert latest changed pages; dispose of superseded pages in accordance with applicable regulations.

NOTE: On a changed page, the portion of the text affected by the latest change is indicated by a vertical line, or other change symbol, in the outer margin of the page. Changes to illustrations are indicated by miniature pointing hands. Changes to wiring diagrams are indicated by shaded areas.

Dates of issue for original and changed pages are:

Orginal . . . . . 1 Aug 2004
(Prev incorp IRACs 1 thru 75)

Change 1 . . . . . 1 Mar 2005
(Incorp IRAC 76)

Change 2 . . . . . 1 Aug 2005
(Incorp IRAC 77)

Change 3 . . . . . 1 Mar 2006
(Incorp IRAC 78)

Change 4 . . . . . 1 Sep 2006
(IRACs 79 and 80 Cancelled)
(Incorp IRAC 81)

Change 5 . . . . . 1 Apr 2007
(Incorp IRACs 82 thru 84)

Total number of pages in this manual is 542, consisting of the following:

Page No.	#Change No.	Page No.	#Change No.	Page No.	#Change No.
Title	5	9-3 - 9-4	2	10-26 Blank	0
A - B	5	9-5	3	11-1 - 11-12	0
C Blank	2	9-6 - 9-10	0	11-13	2
i	5	9-11 - 9-12	2	11-14 - 11-25	0
iA	5	9-13 - 9-14	3	11-26	2
ii - iii	0	9-14A	3	11-27 - 11-34	0
iv	5	9-14B Blank	3	11-35 - 11-36	2
v - vi	0	9-15 - 9-16	5	11-37 - 11-39	0
vii	2	9-16A - 9-16E	5	11-40	2
viii	4	9-16F Blank	5	11-41 - 11-48	0
ix - xiii	0	9-17 - 9-18	3	12-1	4
xiv - xv	3	9-19 - 9-20	0	12-2	2
xvi - xvii	5	9-21	2	12-3 - 12-4	4
xviiA	5	9-22	0	12-5	0
xviiB Blank	5	9-23	1	12-6 - 12-7	2
xviii	2	9-24 - 9-28	0	12-8	0
xix	0	9-29	4	12-9 - 12-10	4
xx - xxii	4	9-30	5	12-11	1
xxiii - xxx	5	9-30A	4	12-12	0
1-1 - 1-2	2	9-30B Blank	4	13-1 - 13-2	0
1-3	3	9-31	2	13-3	3
1-4 Blank	0	9-32 - 9-35	0	13-4 - 13-6	0
2-1 - 2-2	2	9-36	5	13-7	3
2-3	0	9-37 - 9-44	0	13-8	0
2-4	1	9-45	1	13-9 - 13-10	3
3-1	0	9-45A	1	14-1 - 14-2	3
3-2 Blank	0	9-45B Blank	1	14-3 - 14-5	5
4-1	0	9-46	1	14-5A	5
4-2 Blank	0	9-46A	2	14-5B Blank	5
5-1	0	9-46B Blank	2	14-6 - 14-7	0
5-2 Blank	0	9-47 - 9-56	0	14-8	3
6-1	4	9-57	4	14-9 - 14-11	4
6-2 - 6-3	5	9-58 - 9-67 Deleted	4	14-12	3
6-4 Blank	4	9-68	4	14-13 - 14-16	0
7-1 - 7- 30	5	9-69 - 9-76	0	14-16A	3
8-1 - 8-3	0	9-77	2	14-16B Blank	1
8-4	2	9-78	0	14-17 - 14-29	0
8-5	0	9-79	2	14-30	1
8-6	4	9-80 - 9-81	0	14-30A	5
8-6A - 8-6D	4	9-82	2	14-30B	5
9-1 - 9-2	0	10-1 - 10-25	0	14-31 - 14-32	3

Major changes resulting from this change are as follows:
1. Miscellaneous Changes.

Zero in this column indicates an original page.

LIST OF EFFECTIVE PAGES (Cont)

Page No.	#Change No.
14-33 - 14-34	0
14-35 - 14-36	3
14-37	2
14-38	3
14-39 - 14-42	0
14-42A	1
14-42B Blank	1
14-43 - 14-47	0
14-48 - 14-49	1
14-50 - 14-54	0
14-55	5
14-55A - 14-55B	5
14-56	4
14-57 - 14-58	0
14-59	3
14-60 - 14-64	0
14-65	3
14-66	2
14-67 - 14-80	0
14-81 - 14-82	4
14-82A	4
14-82B Blank	4
14-83	2
14-84	0
14-85	2
14-85A	1
14-85B Blank	1
14-86 - 14-87	2
14-87A	1
14-87B Blank	1
14-88	4
14-89	2
14-89A	1
14-89B Blank	1
14-90 - 14-91	0
14-92	3
14-93 - 14-94	0
14-95	2
14-96 - 14-99	0
14-100	2
14-100A	1
14-100B Blank	1
14-101 - 14-109	0
14-110	5
14-111 - 14-112	4
15-1	4
15-2 Blank	4
15-3 - 15-48 Deleted	4
16-1 - 16-2	5
16-2A	5
16-2B Blank	5
16-3 - 16-4	2
16-5	5
16-6	0
16-7 - 16-10	5
16-11	0
16-12	5
16-13	0
16-14	5
16-14A - 16-14B	5
16-15 - 16-28	0
16-29 - 16-30	1
16-31 - 16-32	0
16-33	2
16-34	1
16-35 - 16-37	0
16-38	1
16-39	5
16-40	1
16-41	0
16-42 - 16-43	2
16-44 - 16-47	0
16-48 Blank	0
17-1	0
17-2	3
17-3 - 17-6	0
17-7 - 17-9	5
17-10	0
17-11	3
17-12 - 7-17	0
17-18 Blank	0
A-1	0
A-2 Blank	0
B-1 - B-17	0
B-18 Blank	0
Glossary-1 - Glossary-6	0
Index-1 - Index-33	4
Index-34 Blank	4

THIS PAGE INTENTIONALLY LEFT BLANK.

TABLE OF CONTENTS

Chapter		Page
1	INTRODUCTION	
1-1.	General	1-1
1-7.	Description of NAVAIR 13-1-6.5	1-2
1-17.	Allowance Listing of Rescue and Survival Equipment	1-2
1-19.	Levels of Maintenance	1-3
1-21.	Supplementary Publications	1-3
1-23.	Definitions	1-3
2	MAINTENANCE CONCEPTS, SCHEDULING AND DOCUMENTATION	
	(Section 2-1. Maintenance Concepts)	
2-1.	General	2-1
	(Section 2-2. Maintenance Scheduling)	
2-5.	General	2-1
	(Section 2-3. Accident Evaluation)	
2-7.	Aircraft Accident Report Inspection	2-1
	(Section 2-4. Maintenance Documents)	
2-10.	General	2-1
	(Section 2-5. Illustrated Parts Breakdown Information)	
2-13.	General	2-2
2-16.	Group Assembly Parts List	2-2
2-25.	Numerical Index	2-3
3	RESERVED	
4	RESERVED	
5	RESERVED	
6	BREATHING AIR TESTING PROCEDURES	
	(Section 6-1. Procedures)	
6-1	General	6-1
6-2.	Air Sampling	6-1
6-3.	Sources for Air Testing	6-1
7	SURVIVAL EGRESS AIR (SEA) FOR AIRCREW (SRU-42/P) AND MARINE TROOP PASSENGERS (SRU-43/P)	
	(Section 7-1. Description)	
7-1.	General	7-1

TABLE OF CONTENTS (Cont)

Chapter		Page
7-5.	Configuration	7-1
7-10.	Support Equipment	7-2
7-12.	Reference Number, Items, and Supply Data	7-2
	(Section 7-2. Modifications)	
7-14.	General	7-2
	(Section 7-3. Maintenance)	
7-16.	General	7-3
7-19.	Inspections	7-3
7-23.	Post Flight Inspection	7-8
7-31.	Disassembly	7-15
7-38.	Final Testing	7-23
	(Section 7-4. Illustrated Parts Breakdown)	
7-39.	General	7-24

TABLE OF CONTENTS

Chapter Page

8 CREWMEMBER'S AIRCRAFT SAFETY BELT MS16070-2, MS16070-3, AND MS16070-21

(Section 8-1. Description)

8-1. General 8-1
8-3. Configuration 8-1
8-5. Application 8-1

(Section 8-2. Modifications)

8-7. General 8-2

(Section 8-3. Maintenance)

8-13. General 8-5
8-15. Inspection 8-5
8-19. Repair 8-5
8-22 Cleaning 8-6
8-24. Service/Shelf Life 8-6

9 SURVIVAL ITEMS

(Section 9-1. Water Storage Bag)

9-1. Description 9-1
9-3. Configuration 9-1
9-5. Application 9-1
9-7. Maintenance 9-1

(Section 9-2. Clear Vinyl Water Storage Bag)

9-10. Description 9-1
9-12. Configuration 9-1
9-14. Application 9-1
9-16. Maintenance 9-2

(Section 9-3. Combat Casualty Blankets)

9-19. Description 9-2
9-21. Configuration 9-2
9-23. Application 9-2
9-25. Maintenance 9-3

(Section 9-4. Wool Blanket)

9-28. Description 9-3
9-30. Application 9-3
9-32. Maintenance 9-3

TABLE OF CONTENTS (Cont)

Chapter Page

(Section 9-5. Emergency Drinking Water Supply Bottle)

9-37. Description 9-4
9-39. Maintenance 9-4

(Section 9-6. Water Bottle - Canteen)

9-42. Description 9-4
9-44. Maintenance 9-4

(Section 9-7. Bagged Drinking Water, 4-Ounce)

9-47. Description 9-5
9-49. Configuration 9-5
9-51. Application 9-5
9-53. Maintenance 9-5

(Section 9-8. Water Desalter Kit)

9-57. Description 9-7
9-59. Configuration 9-7
9-61. Application 9-7
9-63. Maintenance 9-7
9-66. Modification 9-7

(Section 9-9. Ground/Air Emergency Code Card)

9-68. Description 9-8
9-70. Configuration 9-8
9-72. Application 9-8
9-74. Maintenance 9-8

(Section 9-10. Magnetic Wrist Compass)

9-77. Description 9-10
9-79. Configuration 9-10
9-81. Application 9-10
9-83. Maintenance 9-10

(Section 9-11. Landmark Type 27 Compass)

9-86. Description 9-10
9-88. Configuration 9-10
9-90. Application 9-11
9-92. Maintenance 9-11

(Section 9-12. Lensatic Compass)

9-95. Description 9-11
9-97. Configuration 9-11
9-99. Application 9-11
9-101. Maintenance 9-11

TABLE OF CONTENTS

Chapter Page

(Section 9-13. Nylon Cord)

9-104. Description 9-12
9-106. Application 9-12
9-108. Maintenance 9-12

(Section 9-14. Hoisting Gloves)

9-111. Description 9-12
9-113. Application 9-12
9-115. Maintenance 9-12

(Section 9-15. Dye Marker)

9-119. Description 9-13
9-121. Configuration 9-13
9-123. Application 9-13
9-125. Maintenance 9-13

(Section 9-16. Medical First Aid Kits, General Purpose)

9-128. Description 9-13
9-130. Configuration 9-13
9-132. Application 9-13
9-134. Modification 9-13
9-136. Maintenance 9-13

(Section 9-16A. Individual First Aid Kit (IFAK)

9-140A. Description 9-16A
9-140C. Configuration 9-16A
9-140E. Application 9-16B
9-140G. Modification 9-16B
9-140I. Maintenance 9-16B
9-140K. Inspection 9-16B

(Section 9-17. Individual Aircrewmember's Survival Kit (SRU-31/P))

9-141. Description 9-16E
9-143. Configuration 9-16E
9-146. Application 9-21
9-148. Modification 9-21
9-150 Maintenance 9-21

(Section 9-18. Individual Aircrewmember's Survival Kit (SRU-31A/P))

9-155. Description 9-22
9-157. Configuration 9-23
9-160. Application 9-24
9-162. Modification 9-24
9-164. Maintenance 9-24

(Section 9-19. Pocket Knife)

9-171. Description 9-28
9-173. Configuration 9-28
9-175. Application 9-28
9-177. Maintenance 9-28

TABLE OF CONTENTS

Chapter Page

(Section 9-20. Hook Blade Knife)

9-181. Description 9-29
9-183. Configuration 9-29
9-185. Application 9-29
9-187. Maintenance 9-29

(Section 9-21. Double Bladed Shroud Line Cutter)

9-191. Description 9-29
9-193. Configuration 9-30
9-195. Application 9-30
9-197. Modification 9-30
9-199. Maintenance 9-30

(Section 9-22. Hook and Snap Blade Knife Type MC-1)

9-203. Description 9-31
9-205. Configuration 9-31
9-207. Application 9-31
9-209. Maintenance 9-31

(Section 9-23. Survival Knife and Sheath)

9-213. Description 9-32
9-215. Configuration 9-32
9-217. Application 9-32
9-219. Modification 9-32
9-221. Maintenance 9-32

(Section 9-24. Leatherman Wave Survival Tool)

9-225. Description 9-33
9-227. Configuration 9-33
9-229. Application 9-33
9-231. Modification 9-33
9-233. Maintenance 9-34

(Section 9-25. Emergency Signaling Mirror)

9-236. Description 9-34
9-238. Configuration 9-34
9-240. Application 9-34
9-242. Maintenance 9-35

(Section 9-26. Mark 4 Emergency Signaling Mirror)

9-245. Description 9-35
9-247. Configuration 9-35
9-249. Application 9-35
9-251. Maintenance 9-35

TABLE OF CONTENTS (Cont)

Chapter Page

(Section 9-27. Sunscreen)

9-254. Description 9-36
9-256. Configuration 9-36
9-258. Application 9-36
9-260. Maintenance 9-36

(Section 9-28. Fire Starter)

9-263. Description 9-36
9-265. Application 9-36
9-267. Maintenance 9-36

(Section 9-29. Pocket Chain Saw)

9-270. Description 9-37
9-272. Application 9-37
9-274. Maintenance 9-37

(Section 9-30. Personnel-Lowering Device)

9-277. Description 9-37
9-279. Configuration 9-38
9-281. Application 9-38
9-283. Modification 9-38
9-285. Maintenance 9-38

(Section 9-31. Hand Pump)

9-289. Description 9-42
9-291. Configuration 9-42
9-293. Application 9-42
9-295. Maintenance 9-42

(Section 9-32. Rations)

9-298. Description 9-43
9-300. Configuration 9-43
9-303. Application 9-43
9-305. Maintenance 9-43

(Section 9-33. MK-79 MOD 0 and MK-79 MOD 2 Personnel Distress Signal Kit)

9-308. Description 9-44
9-310. Configuration 9-44
9-312. Application 9-44
9-314. Maintenance 9-44

TABLE OF CONTENTS (Cont)

Chapter Page

(Section 9-34. MK-124 MOD 0 Marine Smoke and Illumination Signal)

9-317. Description 9-45A
9-319. Configuration 9-45A
9-321. Application 9-45A
9-323. Maintenance 9-45A

(Section 9-34A. MK-189 MOD 0 Personnel Distress Signal Kit)

9-326A1. Description 9-46A
9-326A3. Configuration 9-46A
9-326A5. Maintenance 9-46A
9-326A7. Inspection 9-46A

(Section 9-35. Bailing Sponge)

9-327. Description 9-47
9-329. Maintenance 9-47

(Section 9-36. Signaling Whistle)

9-332. Description 9-47
9-334. Configuration 9-47
9-336. Application 9-47
9-338. Maintenance 9-47

(Section 9-37. Signaling Whistle, Classic Fox 40)

9-341. Description 9-48
9-343. Configuration 9-48
9-345. Application 9-48
9-347. Maintenance 9-48

(Section 9-38. Aircrewmember's Survival Tool Kit)

9-351. Description 9-48
9-353. Configuration 9-48
9-355. Application 9-49
9-357. Maintenance 9-49

(Section 9-39. Aircrewmember's Lighted Clipboard (MXU-163/P))

9-360. Description 9-49
9-362. Configuration 9-49
9-364. Application 9-49
9-366. Modification 9-49
9-368. Maintenance 9-49

(Section 9-40. Pilot's Mapstrap Kneeboard, Clipboard)

9-372. Description 9-52
9-374. Application 9-52
9-376. Maintenance 9-52

TABLE OF CONTENTS (Cont)

Chapter Page

(Section 9-41. Mechanical Patch)

9-378. Description 9-54
9-380. Configuration 9-54
9-382. Application 9-54
9-384. Maintenance 9-54

(Section 9-42. Relief Systems)

9-388. Description 9-55
9-390. Maintenance 9-57

(Section 9-43. Deleted)

(Section 9-44. Pistol Holster, Leather (Optional Equipment))

9-401. Description 9-68
9-403. Configuration 9-68
9-405. Application 9-68
9-407. Maintenance 9-68
9-412. Stowage 9-69

(Section 9-45. Manual Reverse Osmosis Desalinator (MROD))

9-414. Description 9-69
9-416. Configuration 9-69
9-418. Application 9-69
9-420. Maintenance 9-70

(Section 9-46. Passenger Helicopter Aircrew Breathing Device System)

9-426. General 9-71
9-428. Fabrication of PHABD Holster 9-71
9-435. Attachment of PHABD Holster to Life Preserver 9-76
9-439. Stowing of HABD in PHABD Holster 9-77
9-441. Maintenance 9-77

(Section 9-47. Theater Specific Hot and Cold Weather Survival Kits)

9-450. Description 9-80
9-452. Configuration 9-80
9-454. Application 9-80
9-456. Maintenance 9-80

TABLE OF CONTENTS (Cont)

Chapter Page

10 SEARCH AND RESCUE KIT

(Section 10-1. Description)

10-1. General 10-1
10-3. Configuration 10-1
10-5. Application 10-2
10-7. Function 10-2
10-9. Reference Numbers, Items and Supply Data 10-3

(Section 10-2. Modification)

10-11. General 10-3

(Section 10-3. Maintenance)

10-13. General 10-3
10-15. Inspection 10-3
10-19. Fabrication 10-4
10-22. Splicing Prodcedures 10-15
10-23. Rigging and Packing 10-19

11 COLD WEATHER SURVIVAL KITS

(Section 11-1. SRU-A/P99S-1 4-Man Cold Weather Survival Kit)

11-1. Description 11-1
11-3. Configuration 11-1
11-5. Application 11-1
11-7. Maintenance 11-1
11-19. Fabrication 11-5
11-22. Rigging and Packing 11-12

(Section 11-2. SRU-A/P99S-2 12-Man Cold Weather Survival Kit)

11-28. Description 11-15
11-30. Configuration 11-15
11-32. Application 11-15
11-34. Maintenance 11-15
11-46. Fabrication 11-20
11-48. Rigging and Packing 11-24

(Section 11-3. Cold Weather Survival Equipment)

11-54. General 11-28

(Section 11-3.1. Combat Casualty Blankets)

11-56. General 11-28

(Section 11-3.2. Nylon Cord)

11-58. General 11-28

TABLE OF CONTENTS (Cont)

Chapter Page

(Section 11-3.3. Mark 4 Emergency Signaling Mirror)

11-60. General 11-29

(Section 11-3.4. Signaling Whistle, Classic Fox 40, (Black, No-Moving Parts))

11-62. General 11-29

(Section 11-3.5. Chemical Lights)

11-64. General 11-29

(Section 11-3.6. Strike Force Striker)

11-66. Description 11-30
11-68. Configuration 11-30
11-70. Application 11-30
11-72. Maintenance 11-30

(Section 11-3.7. Lifeboat Matches)

11-75. Description 11-30
11-77. Configuration 11-30
11-79. Application 11-31
11-81. Maintenance 11-31

(Section 11-3.8. Survival Saw)

11-84. Description 11-31
11-86. Configuration 11-31
11-88. Application 11-31
11-90. Maintenance 11-32

(Section 11-3.9. Cold Weather Rations)

11-93. Description 11-32
11-95. Configuration 11-32
11-97. Application 11-32
11-99. Maintenance 11-32

(Section 11-3.10. Lightweight Extreme Weather Shelter)

11-104. Description 11-33
11-106. Configuration 11-33
11-111. Application 11-34
11-113. Maintenance 11-35

(Section 11-3.11. Ultima Thule Sleeping Bag)

11-121. Description 11-36
11-123. Configuration 11-36
11-125. Application 11-37
11-127. Maintenance 11-37

TABLE OF CONTENTS (Cont)

Chapter Page

(Section 11-3.12. Self-Inflating Ground Insulator)

11-130. Description 11-37
11-132. Configuration 11-37
11-134. Application 11-38
11-136. Maintenance 11-38

(Section 11-3.13. Chemical Heat Packs)

11-139. Description 11-39
11-141. Configuration 11-39
11-143. Application 11-39
11-145. Maintenance 11-39

(Section 11-3.14. Thermal Protective Aid)

11-148. Description 11-40
11-150. Configuration 11-40
11-152. Application 11-40
11-154. Maintenance 11-40

(Section 11-3.15. Aircrewmember's Cape)

11-157. Description 11-41
11-159. Configuration 11-41
11-161. Application 11-41
11-163. Maintenance 11-41

(Section 11-3.16. Aluminum Candle Lantern)

11-166. Description 11-41
11-168. Configuration 11-41
11-170. Application 11-41
11-172. Maintenance 11-42

(Section 11-3.17. Pocket Cooker)

11-175. Description 11-42
11-177. Configuration 11-42
11-179. Application 11-42
11-181. Maintenance 11-43

(Section 11-3.18. 2 Quart Aluminum Pot)

11-184. Description 11-43
11-186. Configuration 11-43
11-188. Application 11-43
11-190. Maintenance 11-43

TABLE OF CONTENTS (Cont)

Chapter Page

(Section 11-3.19. Rationing Cup)

11-193. Description 11-44
11-195. Configuration 11-44
11-197. Application 11-44
11-199. Maintenance 11-44

(Section 11-3.20. Telescoping Shovel)

11-202. Description 11-44
11-204. Configuration 11-44
11-206. Application 11-44
11-208. Maintenance 11-44

(Section 11-3.21. Ice Screws)

11-211. Description 11-45
11-213. Configuration 11-45
11-215. Application 11-45
11-217. Maintenance 11-45

(Section 11-3.22. Ice Pick)

11-220. Description 11-46
11-222. Configuration 11-46
11-224. Application 11-46
11-226. Maintenance 11-46

(Section 11-3.23. Rubber Tubing)

11-229. Description 11-47
11-231. Configuration 11-47
11-233. Application 11-47
11-235. Maintenance 11-47

(Section 11-3.24. Duct Tape)

11-240. Description 11-47
11-242. Configuration 11-47
11-244. Application 11-48
11-246. Maintenance 11-48

(Section 11-3.25. Plastic Bag)

11-249. Description 11-48
11-251. Configuration 11-48
11-253. Application 11-48
11-255. Maintenance 11-48

TABLE OF CONTENTS (Cont)

Chapter Page

12 LIGHTS

(Section 12-1. Flashlight Type A-9)

12-1. Description 12-1
12-3. Configuration 12-1
12-5. Application 12-1
12-7. Maintenance 12-1

(Section 12-2. Distress Marker Light Type SDU-5/E and SDU-39/N)

12-10. Description 12-1
12-12. Configuration 12-1
12-14. Application 12-2
12-16. Modification 12-2
12-18. Maintenance 12-2

(Section 12-3. Survivor Locator Light (LPP-1/1A Life Preserver))

12-32. Description 12-6
12-34. Configuration 12-6
12-36. Application 12-6
12-38. Modification 12-6
12-40. Maintenance 12-6

(Section 12-4. Penlight Flashlights)

12-43. Description 12-7
12-45. Configuration 12-7
12-48. Application 12-7
12-50. Modification 12-7
12-52. Maintenance 12-8

(Section 12-5. Chemical Lights)

12-55. Description 12-8
12-57. Configuration 12-8
12-60. Application 12-8
12-62. Maintenance 12-8

(Section 12-6. Cyalume S.O.S. Signal and S.O.S. Light)

12-65. Description 12-9
12-67. Configuration 12-9
12-70. Application 12-9
12-72. Maintenance 12-10

(Section 12-7. Cyalume Personnel Marker Light (PML))

12-75. Description 12-10
12-77. Configuration 12-10
12-79. Application 12-10
12-81. Maintenance 12-10

TABLE OF CONTENTS (Cont)

Chapter Page

(Section 12-8. Regular Standard, Right Angle, 2-Cell Flashlight)

12-84. Description 12-11
12-86. Configuration 12-11
12-88. Application 12-11
12-90. Maintenance 12-11

(Section 12-9. ACR/FA-11 and ACR/FA-11(M) Crew Light)

12-93. Description 12-12
12-95. Configuration 12-12
12-97. Application 12-12
12-99. Maintenance 12-12

13 RADIOS

(Section 13-1. AN/URT-33A Radio Beacon Set)

13-1. Description 13-1
13-3. Configuration 13-1
13-5. Application 13-1
13-7. Maintenance 13-1

(Section 13-2. AN/PRC-90 Radio Set)

13-10. Description 13-2
13-12. Configuration 13-2
13-14. Application 13-2
13-16. Maintenance 13-2

(Section 13-3. AN/PRC-112, AN/PRC-112C, AN/PRC-112B, AN/PRC-112B1 and AN/PRC-112G Survival Radios)

13-18. Description 13-3
13-21. Configuration 13-3
13-23. Application 13-3
13-25. Maintenance 13-3

(Section 13-4. AN/CRT-3 and AN/CRT-3A Radio Sets)

13-28. Description 13-4
13-30. Configuration 13-4
13-33. Application 13-4
13-35. Maintenance 13-4

(Section 13-5. AN/PRT-5 Radio Transmitting Set)

13-37. Description 13-6
13-39. Configuration 13-6
13-41. Application 13-6
13-43. Maintenance 13-6

TABLE OF CONTENTS (Cont)

Chapter Page

(Section 13-6. AN/PRC-149, AN/PRC-149A Radio Set and C-12631/PRC-149 Radio Control Unit)

13-46. Description 13-7
13-49. Configuration 13-7
13-51. Application 13-7
13-54. Maintenance 13-7

(Section 13-7. AN/URT-140 Radio Beacon Set)

13-56. Description 13-8
13-58. Configuration 13-8
13-60. Application 13-8
13-62. Maintenance 13-8

(Section 13-8. AN/PRQ-7 Combat Survivor/Evader Locator Radio Set)

13-64. Description 13-9
13-73. Configuration 13-9
13-75. Application 13-10
13-77. Maintenance 13-10

14 SEARCH AND RESCUE (SAR) EQUIPMENT

(Section 14-1. Introduction)

14-1. General 14-1
14-3. Maintenance 14-1

(Section 14-2. Helicopter Rescue Equipment Bag)

14-12. Description 14-12
14-15. Modification 14-12
14-17. Maintenance 14-12

(Section 14-3. Helicopter Rescue Equipment Bag Contents)

14-23. General 14-15

(Section 14-3.1. Cable Grip)

14-25. Description 14-15
14-27. Modification 14-15
14-29. Maintenance 14-15
14-35. Illustrated Parts Breakdown 14-16

(Section 14-3.1.1. Multi Place Lift Raft (MPLR) Weak Link)

14-37.1. General 14-16A
14-37.3. Maintenance 14-16A
14-37.5. Inspection 14-16A
14-37.7. Repair 14-16A
14-37.9. Fabrication 14-16A

(Section 14-3.2. Double Rescue Hook)

14-38. Description 14-17
14-40. Modification 14-17
14-42. Maintenance 14-17
14-44. Illustrated Parts Breakdown 14-17

TABLE OF CONTENTS

Chapter Page

(Section 14-3.3. Hoist Quick Splice)

14-47. Description 14-19
14-49. Modification 14-19
14-51. Maintenance 14-19

(Section 14-3.4. Hoisting Sling Assembly)

14-58. Description 14-21
14-60. Modification 14-21
14-62. Maintenance 14-21

(Section 14-3.5. Cable Cutter)

14-69. Description 14-23
14-71. Modification 14-23
14-73. Maintenance 14-23

(Section 14-3.6. Pneumatic Rescue Hand Tool)

14-79. Description 14-24
14-81. Modification 14-24
14-83. Maintenance 14-24

(Section 14-3.7. Hoisting Gloves)

14-93. Description 14-26
14-95. Modification 14-26
14-97. Maintenance 14-26

(Section 14-3.8. Wool Blanket)

14-102. Description 14-27
14-104. Modification 14-27
14-106. Maintenance 14-27

(Section 14-3.9. Chemical Light Strap)

14-112. Description 14-27
14-114. Modification 14-27
14-116. Maintenance 14-28

(Section 14-3.10. Crewmember's Aircraft Safety Belt)

14-122. General 14-30

(Section 14-3.11. Chemical Lights)

14-124. General 14-30

(Section 14-3.11.1. Electric Sea Marker Light, SDU-36/N)

14-125.1. General 14-30A
14-125.3. Maintenance 14-30A
14-125.5. Inspection 14-30A
14-125.7. Repair 14-30A

(Section 14-3.11.2. Automatic Crew-Overboard Marker Light)

14-125.9. Description 14-30B
14-125.11 Maintenance 14-30B

TABLE OF CONTENTS (Cont)

Chapter Page

14-125.13. Place-In-Service Inspection 14-30B
14-125.17. Repairs 14-30B

(Section 14-3.12. HGU-25 (Cranial))

14-126. General 14-31

(Section 14-3.13. LPU-32/P or LPP-1/A Life Preserver Assembly)

14-128. General 14-32

(Section 14-4. Rescue Strop)

14-130. Description 14-34
14-132. Modification 14-34
14-134. Maintenance 14-34

(Section 14-5. Quick Strop)

14-142. Description 14-37
14-144. Modification 14-37
14-146. Maintenance 14-37

(Section 14-6. Cable Weight Cover)

14-152. Description 14-38
14-154. Modification 14-38
14-156. Maintenance 14-39

(Section 14-7. Trail Line Assembly)

14-163. Description 14-40
14-165. Modification 14-40
14-167. Maintenance 14-40

(Section 14-7.1. 70-Foot Trail Line Assembly (For Training Only))

14-175.1. General 14-42A
14-175.3. Maintenance 14-42A

(Section 14-8. MEDEVAC Litter)

14-176. Description 14-43
14-178. Modification 14-43
14-180. Maintenance 14-43

(Section 14-9. Rescue Litter)

14-192. Description 14-47
14-194. Modification 14-47
14-196. Maintenance 14-47

(Section 14-10. Rescue Net)

14-202. Description 14-49
14-204. Modification 14-49
14-206. Maintenance 14-49
14-213. Illustrated Parts Breakdown 14-50

TABLE OF CONTENTS

Chapter Page

(Section 14-11. Collapsible Rescue Basket P/N 495)

14-215A. Description 14-55
14-215C. Modification 14-55
14-215E. Application 14-55
14-215G. Maintenance 14-55
14-215L. Repairs and Cleaning 14-55B

THIS PAGE INTENTIONALLY LEFT BLANK.

TABLE OF CONTENTS

Chapter Page

(Section 14-12. Forest Penetrator and Rescue Seat)

14-216. Description 14-56
14-218. Modification 14-56
14-220. Maintenance 14-56
14-229. Illustrated Parts Breakdown 14-60

(Section 14-13. Rappelling and Tree Extraction Equipment)

14-233. General 14-63

(Section 14-13.1. Descent Control Device)

14-235. Description 14-63
14-237. Modification 14-63
14-239. Maintenance 14-63

(Section 14-13.2. Rappelling Ropes With Rope Storage Bags)

14-245. Description 14-64
14-247. Modification 14-64
14-249. Maintenance 14-64

(Section 14-13.3. Basic Rappel Harness/Pro Series Rescue Harness)

14-256. Description 14-65
14-258. Modification 14-65
14-260. Maintenance 14-65

(Section 14-13.4. Carabiners)

14-266. Description 14-66
14-268. Modification 14-66
14-270. Maintenance 14-66

(Section 14-13.5. Spring Loaded Belay Plate)

14-276. Description 14-67
14-278. Modification 14-67
14-280. Maintenance 14-67

(Section 14-13.6. 540 Belay Device)

To Be Provided

(Section 14-13.7. Dynamic Rope (Kernmantle) With Storage Bag)

14-286. Description 14-69
14-288. Modification 14-69
14-290. Maintenance 14-69

(Section 14-13.8. Static Rope With Storage Bag)

To Be Provided

TABLE OF CONTENTS (Cont)

Chapter Page

(Section 14-13.9. Nylon Strap)

14-297. Description 14-71
14-299. Modification 14-71
14-301. Maintenance 14-71

(Section 14-14. Hoisting Vest (Full Body Fishnet))

14-307. Description 14-71
14-309. Modification 14-71
14-311. Maintenance 14-72

(Section 14-15. Climber's Belt and Strap)

14-317. Description 14-73
14-319. Modification 14-73
14-321. Maintenance 14-73

(Section 14-16. Climber's Spikes)

14-327. Description 14-74
14-329. Modification 14-74
14-331. Maintenance 14-74

(Section 14-17. Climber's Helmet and Headlamp)

14-337. Description 14-75
14-339. Modification 14-75
14-341. Maintenance 14-75

(Section 14-18. V-Bladed Rescue Knife)

14-347. Description 14-76
14-349. Modification 14-76
14-351. Maintenance 14-76

(Section 14-19. Rescue 8)

14-358. Description 14-77
14-360. Modification 14-77
14-362. Maintenance 14-77

(Section 14-20. Sven Folding Saw)

14-368. Description 14-78
14-370. Modification 14-78
14-372. Maintenance 14-78

TABLE OF CONTENTS (Cont)

Chapter Page

(Section 14-21. Rescue Pulleys)

14-378. Description 14-79
14-380. Modification 14-79
14-382. Maintenance 14-79

(Section 14-22. Entrenching Tool)

14-388. Description 14-80
14-390. Modification 14-80
14-392. Maintenance 14-80

(Section 14-23. SAR Medical Kit, Level A/B/C)

14-398. Description 14-81
14-400. Modification 14-81
14-402. Maintenance 14-81

(Section 14-24. SAR Aircrewmember Personal Equipment)

14-408. General 14-83

(Section 14-24.1. TRI-SAR Harness Assembly)

14-410. Description 14-83
14-412. Modification 14-83
14-414. Maintenance 14-83
14-422. Rigging and Packing 14-87

(Section 14-24.2. Aircrew Swimmer's Harness (HBU-23/P))

14-424. Description 14-89
14-426. Modification 14-89
14-428. Original Issue Fitting and Marking 14-89
14-431. Maintenance 14-92
14-444. Rigging and Packing 14-95

(Section 14-24.3. LPU-28/P Life Preserver Assembly)

14-446. General 14-96

(Section 14-24.4. Helicopter Aircrew Breathing Device (HABD) SRU-40/P Series)

14-448. General 14-98

(Section 14-24.5. SAR Helicopter Aircrew Breathing Device Holster)

14-450. Description 14-98
14-452. Modification 14-99
14-454. Installation 14-99
14-458. Maintenance 14-100

TABLE OF CONTENTS (Cont)

Chapter Page

(Section 14-24.6. SAR Swimmer's Wetsuit)

14-464. Description 14-101
14-466. Modification 14-101
14-468. Sizing 14-101
14-471. Maintenance 14-101

(Section 14-24.7. SAR Swimmer's Mask)

14-477. Description 14-106
14-479. Modification 14-106
14-481. Maintenance 14-106

(Section 14-24.8. SAR Swimmer's Snorkel)

14-490. Description 14-108
14-492. Modification 14-108
14-494. Maintenance 14-108

(Section 14-24.9. SAR Swimmer's Swim Fins)

14-500. Description 14-109
14-502. Modification 14-109
14-504. Maintenance 14-109

(Section 14-24.10. Rescue Mountain Boots)

14-510. Description 14-109
14-512. Modification 14-109
14-514. Maintenance 14-109

(Section 14-24.11. SAR Signaling Sleeve)

14-519. Description 14-110
14-521. Modification 14-110
14-522. Maintenance 14-110

15 DELETED

16 HELICOPTER AIRCREW BREATHING DEVICE (HABD), SRU-40/P, SRU-40A/P, AND SRU-40B/P

(Section 16-1. Description)

16-1. General 16-1
16-5. Configuration 16-1
16-10. Support Equipment 16-2
16-12. Reference Number, Items, and Supply Data 16-2

TABLE OF CONTENTS (Cont)

Chapter Page

(Section 16-2. Modifications)

16-14. General 16-2

(Section 16-3. Maintenance)

16-16. General 16-3
16-25. Inspections 16-4
16-32. Breathing Air Sources 16-8
16-35. General Safety 16-8
16-38. Replenishing HABD Air Cylinder 16-9
16-46. Cleaning 16-14
16-48. Testing 16-15
16-53. Disassembly 16-20
16-60. Assembly 16-30

(Section 16-4. Illustrated Parts Breakdown)

16-69. General 16-40

17 LEG RESTRAINT GARTERS

(Section 17-1. Leg Restraint Garters, EA-6B and F-14 Aircraft with GRU-Type Ejection Seats)

17-1. Description 17-1
17-3. Configuration 17-1
17-5. Application. 17-1
17-7. Modifications 17-1
17-9. Maintenance 17-1

(Section 17-2. Leg Restraint Garters (P/N 12429-1), AV-8 Aircraft with SJU-Type Ejection Seats)

17-26. Description 17-7
17-28. Configuration 17-7
17-30. Application 17-7
17-32. Modifications 17-7
17-34. Maintenance 17-7

(Section 17-3. Leg Restraint Garters, F/A-18C/D/E/F, F-14D, and T-45A/C Aircraft with SJU-17/SJU-17A Type Ejection Seats)

17-44. Description 17-10
17-46. Configuration 17-10
17-48. Application 17-10
17-50. Modifications 17-10
17-52. Maintenance 17-10

Appendix A Reserved A-1
Appendix B The Metric System and Metric Unit Conversion Charts B-1
Glossary Glossary-1
Alphabetical Index Index-1

LIST OF ILLUSTRATIONS

Figure	Title	Page
7-1.	SEA LV2 1.5 (For Navy and Marine Corp Aircrew)	7-2
7-2.	SEA LV2 2.0 (For Marine Troop Passengers) (TBD)	7-2
7-3.	First-Stage Assembly	7-4
7-4.	Second-Stage Assembly	7-5
7-5.	Cylinder Identification	7-6
7-6.	Serial Number Location	7-6
7-7.	Mouthpiece Placement	7-7
7-8.	Mobile Refill System (MRS-III)	7-9
7-9.	Handwheel “On” Position	7-10
7-10.	Handwheel “Off” Position	7-10
7-11.	Pressure Gauge	7-11
7-12.	Piston O-ring Placement	7-17
7-13.	Placing Piston onto First-Stage Body	7-17
7-14.	Swivel Adapter O-ring Placement	7-18
7-15.	Spacer Placement	7-18
7-16.	Backup O-ring Placement	7-18
7-17.	Valve Seat Adjustment	7-18
7-18.	Indicator Ring Placement	7-19
7-19.	Retaining Nut Attachment	7-19
7-20.	Popper Bearing Placement	7-20
7-21.	Used LP Seat Placement	7-21
7-22.	Poppet to Valve Body Placement	7-21
7-23.	Lever “Feet” Placement	7-21
7-24.	Locknut Adjustment	7-21
7-25.	Installing Inlet Fitting	7-22
7-26.	Insert Valve Body	7-22
7-27.	SEA Mouthpiece Cover	7-23
7-28.	SEA LV2 1.5 (For Navy and Marine Corp Aircrew)	7-25
7-29.	SEA LV2 2.0 (For Marine Troop Passengers Only) (TBD)	7-25
7-30.	First-Stage Regulator with Cylinder and Hose	7-26
7-31.	LV2 Second-Stage	7-28
8-1.	Crewmember’s Aircraft Safety Belt (MS16070-2, MS16070-3, and MS16070-21)	8-1
8-2.	Ramp Gunner’s Extension Belt Sewing Procedures	8-6C
8-3.	Ramp Gunner’s Extension Belt Sewing Procedures	8-6D
9-1.	Water Storage Bag	9-1
9-2.	Clear Vinyl Water Storage Bag	9-2
9-3.	Combat Casualty Blanket, Type I	9-3
9-4.	Combat Casualty Blanket, Type II	9-3
9-5.	Wool Blanket	9-3
9-6.	Emergency Drinking Water Supply Bottle	9-4
9-7.	12 Oz. Water Bottle (Canteen)	9-4
9-8.	Bagged Drinking Water, 4 Oz.	9-6
9-9.	Tethering Tab for 4 Oz. Bagged Water	9-6
9-10.	Desalter Kit, Sea Water, Mark 2, Type II	9-8
9-11.	Ground/Air Emergency Code Card	9-9
9-12.	Magnetic Wrist Compass	9-10
9-13.	Landmark Type 27 Compass	9-10
9-14.	Nylon Cord	9-12
9-15.	Hoisting Gloves	9-12
9-16.	Dye Marker	9-13
9-17.	First Aid Kit (Aircraft Panel Mounted)	9-14
9-18.	First Aid Kit (Rigid Case)	9-14

LIST OF ILLUSTRATIONS (Cont)

Figure	Title	Page
9-18A	IFAK Minor First Aid Kit Items	9-16A
9-18B	IFAK Trauma Kit Items	9-16B
9-18C.	IFAK First Aid Kit	9-16B
9-19.	Individual Aircrewmember's Survival Kit, SRU-31/P (Current Configuration)	9-19
9-20.	Individual Aircrewmember's Survival Kit, SRU-31/P (New Configuration)	9-20
9-21.	Fabrication of SRU-31A/P Equipment Container (Inside of Container)	9-26
9-22.	Fabrication of SRU-31A/P Equipment Container (Outside of Container)	9-27
9-23.	Pocket Knife	9-28
9-24.	Hook Blade Knife	9-29
9-25.	Double Bladed Shroud Line Cutter	9-29
9-26.	Hook and Snap Blade Knife Type MC-1	9-31
9-27.	Survival Knife and Sheath	9-33
9-28.	Emergency Signaling Mirror	9-34
9-29.	Mark 4 Emergency Signaling Mirror	9-35
9-30.	General Configuration	9-36
9-31.	Fire Starter	9-37
9-32.	Pocket Chain Saw	9-37
9-33.	Personnel-Lowering Device	9-38
9-34.	Hand Pump	9-42
9-35.	Rations	9-43
9-36.	MK-79 MOD 0 and MK-79 MOD 2 Personnel Distress Signal Kit	9-45
9-36A.	Photo of an Example Webbing Bandolier	9-45A
9-37.	MK-124 MOD 0 Marine Smoke and Illumination Signal	9-46
9-38.	Bailing Sponge	9-47
9-39.	Signaling Whistle	9-47
9-40.	Classic Fox 40 Signaling Whistle	9-48
9-41.	Aircrewmember's Survival Tool Kit (Typ)	9-50
9-42.	Aircrewmember's Clipboard (MXU-163/P)	9-51
9-43.	Pilot's Mapstrap Kneeboard, Clipboard	9-53
9-44.	Mechanical Patch	9-54
9-45.	Relief Bag	9-55
9-46.	Freshette	9-57
9-47.	Deleted	
9-48.	Deleted	
9-49.	Deleted	
9-50.	Deleted	
9-51.	Deleted	
9-52.	Pistol Holster, Leather	9-69
9-53.	Manual Reverse Osmosis Desalinator	9-70
9-54.	Passenger Helicopter Aircrew Breathing Device (PHABD) Holster	9-72
9-55.	Holster Back Panel	9-73
9-56.	Bottle/Hose Panel	9-74
9-57.	Regulator Flap	9-75
10-1.	SAR Kit	10-1
10-2.	Top Panel Assembly, LRU-13/A Liferaft Container	10-5
10-3.	Bottom Panel Assembly, LRU-13/A Liferaft Container	10-8
10-4.	LRU-13/A Liferaft Container, P-3 SAR Kit	10-9
10-5.	Top Panel Assembly, Survival Equipment Container Assembly	10-11
10-6.	Top Panel Details and Handle Assembly, Survival Equipment Container Assembly	10-13
10-7.	Survival Equipment Container, SAR Kit	10-14
10-8.	Retaining Line Pouch Assembly, Survival Equipment Container	10-16

LIST OF ILLUSTRATIONS (Cont)

Figure	Title	Page
10-9.	Survival Equipment Container with Pouch Assemblies, SAR Kit	10-17
10-10.	Attachment of Retaining Line	10-20
10-11.	V-ring Installation	10-21
10-12.	Routing of Retaining Line to Liferaft (MK-7)	10-21
10-13.	Routing of Retaining Line to Liferaft (LRU-13/A)	10-22
10-14.	Splicing Line and Snaphook Installation (LRU-13/A)	10-22
10-15.	Folding Liferaft	10-23
11-1.	SRU-A/P99S-1 4-Man Cold Weather Survival Kit	11-1
11-2.	4-Man Survival Kit Bag Fabric Panel Dimensions	11-8
11-3.	4-Man Survival Kit Bag Slide Fastener Assembly	11-9
11-4.	4-Man Survival Kit Bag Baffle Strip Assembly	11-9
11-5.	4-Man Survival Kit Bag Slider/Thong Assembly	11-9
11-6.	4-Man Survival Kit Bag Webbing Stop/Hold Assembly	11-10
11-7.	4-Man Survival Kit Bag Handle Assembly	11-10
11-8.	4-Man Survival Kit Bag Suspension Strap Assembly	11-11
11-9.	4-Man Survival Kit Bag Final Assembly	11-11
11-10.	4-Man Cold Weather Survival Kit Packing Diagram	11-14
11-11.	SRU-A/P99S-2 12-Man Cold Weather Survival Kit	11-16
11-12.	12-Man Survival Kit Bag Fabric Panel Dimensions	11-22
11-13.	12-Man Survival Kit Bag Slide Fastener Assembly	11-23
11-14.	12-Man Survival Kit Bag Slider/Thong Assembly	11-24
11-15.	12-Man Survival Kit Bag Slide Fastener Cover Assembly	11-24
11-16.	12-Man Survival Kit Bag Side/Bottom Handle Assembly	11-25
11-17.	12-Man Cold Weather Survival Kit Packing Diagram	11-27
11-18.	Combat Casualty Blanket, Type I	11-28
11-19.	Combat Casualty Blanket, Type II	11-28
11-20.	Nylon Cord	11-28
11-21.	Mark 4 Emergency Signaling Mirror	11-29
11-22.	Classic Fox 40 Signaling Whistle	11-29
11-23.	Chemical Light	11-29
11-24.	Strike Force Striker	11-30
11-25.	Lifeboat Matches	11-31
11-26.	Survival Saw	11-31
11-27.	Cold Weather Rations	11-33
11-28.	Lightweight Extreme Weather Shelter	11-34
11-29.	Ultima Thule Sleeping Bag	11-37
11-30.	Self-Inflating Ground Insulator	11-37
11-31.	Chemical Heat Packs	11-39
11-32.	Thermal Protective Aid	11-40
11-33.	Aircrewmember's Cape	11-41
11-34.	Aluminum Candle Lantern	11-42
11-35.	Pocket Cooker	11-42
11-36.	2 Quart Aluminum Pot	11-43
11-37.	Rationing Cup	11-44
11-38.	Telescoping Shovel	11-44
11-39.	Ice Screw	11-45
11-40.	Ice Pick	11-46
11-41.	Rubber Tubing	11-47
11-42.	Duct Tape	11-48
11-43.	Plastic Bag	11-48

LIST OF ILLUSTRATIONS (Cont)

Figure	Title	Page
12-1.	Flashlight Type A-9	12-1
12-2.	Distress Marker Light	12-2
12-3.	AN/TS-23 Test Set	12-4
12-4.	Survivor Locator Light	12-6
12-5.	Flashlight	12-8
12-6.	Chemical Light	12-9
12-7.	Cyalume S.O.S. Chemical Lights	12-10
12-8.	Regular Standard, Right Angle, 2-Cell Flashlight	12-11
12-9.	ACR/FA-11 and FA-11(M) Crew Light	12-12
13-1.	AN/URT-33A Radio Beacon Set	13-1
13-2.	AN/PRC-90 Radio Set	13-2
13-3.	AN/PRC-112, AN/PRC-112C, AN/PRC-112B, AN/PRC-112B1 and AN/PRC-112G Survival Radios	13-3
13-4.	AN/CRT-3 Radio Set	13-5
13-5.	AN/PRT-5 Radio Transmitting Set	13-6
13-6.	AN/PRC-149 and AN/PRC-149A Radio Sets	13-7
13-7.	C-12631/PRC-149 Radio Control Unit	13-7
13-8.	AN/URT-140 Radio Beacon Set	13-8
13-9	AN/PRQ-7 Combat Survivor/Evader Locator Radio Set	13-10
14-1	Helicopter Rescue Equipment Bag	14-13
14-2.	Cable Grip, Parts Nomenclature	14-15
14-3.	Cable Grip	14-16
14-4.	Rescue Hook (MS18027-2A)	14-18
14-5.	Rescue Hook	14-18
14-6.	Hoist Quick Splice	14-20
14-7.	Fabrication of Hoist Quick Splice Plate	14-21
14-8.	Hoisting Sling Assembly (One Set)	14-22
14-9.	Cable Cutter	14-23
14-10.	Pneumatic Rescue Hand Tool and Case, Parts Nomenclature	14-25
14-11.	Hoisting Gloves	14-26
14-12.	Wool Blanket	14-27
14-13.	Chemical Light Strap	14-28
14-14.	Chemical Light Strap Fabrication	14-29
14-15.	Crewmember's Aircraft Safety Belt (MS16070-2, MS16070-3, and MS16070-21)	14-30
14-16.	Chemical Light	14-30
14-16A.	Electric Sea Marker Light (SDU-36/N)	14-30A
14-17.	HGU-25 (Cranial)	14-31
14-18.	LPU-32/P Life Preserver Assembly, Parts Nomenclature	14-32
14-19.	LPP-1 and -1A Life Preserver Assemblies	14-33
14-20.	Rescue Strop	14-34
14-21.	Quick Strop, P/N 214	14-37
14-22.	Cable Weight Cover, Parts Nomenclature	14-38
14-23.	Trail Line Assembly	14-41
14-24.	Weak Link Assembly	14-42
14-25.	MEDEVAC Litter and Components	14-44
14-26.	Rescue Litter Assembly	14-48
14-27.	Rescue Net	14-50
14-28.	Rescue Net (68X874)	14-51
14-29.	Rescue Net (X872SF)	14-53
14-29A.	Collapsible Rescue Basket (Open)	14-55

LIST OF ILLUSTRATIONS (Cont)

Figure	Title	Page
14-29B.	Collapsible Rescue Basket (Folded)	14-55A
14-29C.	Collapsible Rescue Basket Case	14-55A
14-29D.	Bail Eye	14-55B
14-30.	Forest Penetrator, Parts Nomenclature	14-56
14-31.	Rescue Seat (LSC P/N 420), Parts Nomenclature	14-57
14-32.	Flotation Collar, Parts Nomenclature	14-58
14-33.	Forest Penetrator	14-61
14-34.	Descent Control Device	14-63
14-35.	Basic Rappel Harness	14-65
14-36.	Carabiner	14-66
14-37.	Locking Carabiner	14-66
14-38.	Spring Loaded Belay Plate	14-67
14-39.	Nylon Strap	14-71
14-40.	Hoisting Vest (P/N LSC207)	14-72
14-41.	Climber's Belt and Strap	14-73
14-42.	Climber's Spikes	14-74
14-43.	Climber's Helmet and Headlamp	14-75
14-44.	V-Bladed Rescue Knife	14-76
14-45.	Rescue 8	14-77
14-46.	Sven Folding Saw	14-78
14-47.	Rescue Pulleys, P/Ns 315000 and 315500	14-79
14-48.	Entrenching Tool	14-80
14-49.	Level A, Level B and Level C Medical Kits	14-82
14-50.	TRI-SAR Harness Assembly, P/N 487	14-83
14-51.	TRI-SAR Vest Survival Item Locations	14-88
14-51A.	N-SAR (BTS) SAR Knife (opened)	14-89
14-52.	Aircrew Swimmer's Harness (HBU-23/P)	14-90
14-53.	Attachment of Scabbard to Lifting Strap	14-91
14-54.	LPU-28/P Life Preserver Assembly, Parts Nomenclature	14-97
14-55.	HABD Major Components	14-98
14-56.	SAR Helicopter Aircrew Breathing Device Holster	14-99
14-57.	Wet Suit, Rescue Swimmer, A/P22P-19(V)	14-102
14-58.	Custom Fit Measuring Chart	14-104
14-59.	SAR Swimmer's Masks	14-107
14-60.	SAR Swimmer's Snorkel, MXK-784/P22P-10(V)	14-108
14-61.	SAR Swimmer's Swim Fins, MXU-779/P22P-20(V)	14-109
15-1 through 15-23 Deleted		
16-1.	HABD Major Components	16-2
16-2.	Cylinder Markings	16-4
16-3.	HABD Valve ON Position	16-6
16-4.	HABD Pressure Gage	16-6
16-5.	HABD Valve OFF Position	16-7
16-6.	Pressure Gage Removal and Top-off Adapter Installation	16-11
16-6A.	Mobile Refill System (MRS-III)	16-14B
16-7.	First-Stage Regulator Assembly and Hose Assembly	16-22
16-8.	Second-Stage Regulator Assembly	16-27
16-9.	Helicopter Aircrew Breathing Device, SRU-40/P	16-41
16-10.	Helicopter Aircrew Breathing Device, SRU-40A/P and SRU-40B/P	16-42
16-11.	First-Stage Regulator Service Kit	16-44
16-12.	Second-Stage Regulator Service Kit	16-46
17-1.	Leg Restraint Garter Assembly	17-2

LIST OF ILLUSTRATIONS (Cont)

Figure	Title	Page
17-2.	Upper and Lower Strap Repair	17-3
17-3.	Upper Strap	17-3
17-4.	Slider Keeper Attachment Stitching (Typical)	17-4
17-5.	Lower Strap	17-5
17-6.	Keeper	17-5
17-7.	Connecting Straps Attachment to Upper and Lower Straps	17-6
17-8.	Leg Restraint Garter Assembly	17-8
17-9.	Leg Restraint Garter Assembly (P/N 12429-1) Fabrication	17-9
17-10.	Keeper Fabrication	17-11
17-11.	Upper Leg Garter Fabrication	17-15
B-1	Reference Conversion Charts	B-2

LIST OF TABLES

Table	Title	Page
2-1.	Source, Maintenance, and Recoverability (SM&R) Code Definitions	2-4
7-1.	SEA LV-2 First-Stage Assembly	7-13
7-2.	SEA LV-2 Second-Stage Assembly	7-14
8-1.	Crewmember's Aircraft Safety Belt Directives	8-2
8-2.	Crewmember's Aircraft Safety Belt Modifications	8-2
8-3.	Safety Belt Markings	8-6
9-1.	Medical First Aid Kits, General Purpose	9-15
9-2.	Individual Aircrewmember's Survival Kit, SRU-31/P	9-17
9-3.	SRU-31/P Repairs and Fabrications	9-22
9-4.	SRU-31A/P Repairs and Fabrications	9-25
9-5.	Personnel-Lowering Device Repairs and Fabrications	9-39
9-6.	Aircrewmember's Lighted Clipboard Repairs and Fabrications	9-51
9-7.	Theater Specific (Cold Weather) Survival Kit	9-80
9-8.	Theater Specific (Hot Weather) Survival Kit	9-81
10-1.	Survival Equipment for SAR Kit	10-2
10-2.	Supply Data	10-3
10-3.	SAR Kit Repairs and Fabrications	10-3
11-1.	Survival Equipment – 4-Man Cold Weather Survival Kit	11-2
11-2.	Survival Equipment – 12-Man Cold Weather Survival Kit	11-17
12-1.	Distress Marker Light Repairs and Fabrications	12-3
14-1.	SAR Equipment Inspection and Procurement	14-2
14-2.	Rescue Strop Directives	14-35
14-3.	Modified Rescue Strop Markings (P/N 216-1 [ACC 605])	14-35
14-4.	Rescue Strop Markings P/N 216-1 (LSC modified version)	14-36
14-5.	Quick Strop Markings (P/N 214)	14-38
14-6.	Cable Weight Cover Markings	14-39
14-7.	Forest Penetrator Markings	14-59
14-8.	Flotation Collar Markings	14-59
14-9.	Rescue Seat Markings P/N 420	14-59
14-10.	Rescue Seat Parts List	14-60
14-11.	Sizing Guidelines for TRI-SAR Harness Assembly	14-84
14-12.	Men's Standard Size Chart for SAR Suits	14-103
14-13.	Women's Standrad Size Chart for SAR Suits	14-103
15-1 through 15-4 Deleted		
16-1.	SRU-40/P HABD Directives	16-3
16-2.	HABD Components	16-3
16-3.	Safety Precautions for Charging and Handling Refill Cylinders	16-9
16-4.	Troubleshooting Guide, First-Stage Regulator	16-17
16-5.	Troubleshooting Guide, Second-Stage Regulator	16-18

LIST OF TABLES

Table	Title	Page
17-1.	Leg Restraint Garters, Repairs/Fabrications, EA-6B and F-14	17-1
17-2.	Leg Restraint Garters, Repairs/Fabrications, AV-8	17-7
17-3.	Leg Restraint Garters, Repairs/Fabrications, F/A-18C/D/E/F, F-14D and T-45A/C	17-10
B-1.	Symbols and Relationships of Metric Units	B-4
B-2.	Inches to Millimeters Conversion Chart	B-5
B-3.	International System of Units (SI)	B-6
B-4.	Fraction/Decimal/Millimeter Conversion Chart	B-7
B-5.	Metric Unit Conversions	B-8
B-6.	Alphabetical Index of Metric Unit Conversions	B-9

THIS PAGE INTENTIONALLY LEFT BLANK.

CHAPTER 1

INTRODUCTION

1-1. GENERAL.

WARNING

Unauthorized modification to, and deviations from, prescribed life support and survival equipment by individual aircrewmembers could create unknown safety hazards. The OPNAVINST 3710.7 Series specifies minimum requirements for such equipment and is supplemented by the individual model NATOPS.

1-2. The COMNAVAIRFORINST 4790.2 identifies NAVAIRSYSCOM as the only authority for modification to life support and survival equipment, which is usually accomplished by the Fleet Support Team (FST) (formerly CFA) via Aircrew System Changes or a change to the equipment procurement package. This manual permits an operating activity, with approval of the controlling custodian, to conditionally modify one unit of equipment in-service in order to correct or overcome unsatisfactory conditions in that equipment item. Any other type of deviation, peculiar configuration, or modification to life support and survival equipment is not allowed, and Aircrew Survival Equipmentmen have no authority or responsibility to perform them.

1-3. If an omission or conflict should occur between FST documents and NATOPS requirements, if there is a need for clarification of equipment configuration, or if equipment deficiencies are discovered, the applicable FST should be notified. The FST for rescue and survival equipment is Commander, Naval Air Warfare Center Aircraft Division (NAWCAD), Attn: 4.6.3.3, Bldg 2187, Patuxent River, MD 20670-1906.

1-4. NAVAIRWARCENACDIV DET, Indianapolis, IN 46219, has cognizance over all survival radios and emergency beacons.

1-5. The Aviation-Crew Systems Manual is released under the authority of the Naval Air Systems Command in compliance with the request of the Chief of Naval Operations. The instructions contained herein are mandatory. This series of manuals consists of separately bound volumes, as listed below:

Title	Publication Number
Inflatable Survival Equipment (Liferafts)	NAVAIR 13-1-6.1-1
Inflatable Survival Equipment (Life Preservers)	NAVAIR 13-1-6.1-2
Parachutes	NAVAIR 13-1-6.2
Seat Survival Kits (Oxygen Hoses and Non-SKU Seat Kits)	NAVAIR 13-1-6.3-1
Seat Survival Kits (SKU Series Seat Kits)	NAVAIR 13-1-6.3-2
Oxygen Equipment (Aircraft Equipment, Masks, and Other Systems)	NAVAIR 13-1-6.4-1
Oxygen Equipment (Regulators)	NAVAIR 13-1-6.4-2
Oxygen Equipment (Concentrators)	NAVAIR 13-1-6.4-3
Oxygen Equipment (Converters)	NAVAIR 13-1-6.4-4
Rescue and Survival Equipment	NAVAIR 13-1-6.5
Aircrew Personal Protective Equipment (Aircrew/Passenger Equipment)	NAVAIR 13-1-6.7-1
Aircrew Personal Protective Equipment (Clothing)	NAVAIR 13-1-6.7-2
Aircrew Personal Protective Equipment (Helmets and Masks)	NAVAIR 13-1-6.7-3
Aircrew Personal Protective Equipment (Protective Assembly, Aircrew Survival - Armor)	NAVAIR 13-1-6.7-4
Special Mission Aircrew Equipment	NAVAIR 13-1-6.10

1-6. The purpose of each volume is to provide technical information related to the configuration, application, function, inspection, and maintenance of a particular

category of aircrew safety and survival equipment. The information contained in each volume is intended for Organizational, Intermediate, and Depot Levels of maintenance as established within the Naval Aviation Maintenance Program (COMNAVAIRFORINST 4790.2).

1-7. DESCRIPTION OF NAVAIR 13-1-6.5.

1-8. CONTENTS. This volume contains information on configuration, application, function, inspection, and maintenance of Rescue and Survival Equipment.

NOTE

Technical Data Information Package (TDIP) videos related to the equipment listed in this manual can be obtained from the regional FAILSAFE Tiger Team.

1-9. CONFLICTS AND SUPERSEDURES. This volume shall take precedence over all other documents except for effective related Aircrew System Changes, Interim Aircrew System Changes, and Aircrew System Bulletins. These documents are effective until officially rescinded, cancelled, or superseded.

1-10. The modifications section of each chapter lists all effective changes and bulletins which affect rescue and survival equipment that have been issued on or before the date of latest change or revision to this volume. When applicable, the subject matter of these documents has been incorporated within the text of the appropriate chapters of this volume.

1-11. Effective changes and bulletins which affect rescue and survival equipment and are issued between changes or revisions to this volume should be recorded in the modification section of the manual for the affected equipment by annotating the outer margin of the page with a vertical line and the number of the change or bulletin. A copy of the change or bulletin should be filed in a separate binder in the ALSS work center. When this volume is updated these documents will be listed in the modification section of the applicable chapter and the text of the chapter updated to reflect these changes and bulletins.

1-12. UPDATING. This volume will be updated periodically by the issuance of a revision, which is a 100 percent replacement of pages. Between revisions, changes and rapid action changes will be released, which are partial replacements of pages. All added and changed pages shall be incorporated into the volume according to page number. Superseded and deleted pages shall be discarded. A list of effective pages is provided with each change. A summary of the major changed areas for a particular change is located directly beneath the list of effective pages.

1-13. COMMENTS AND RECOMMENDATIONS. Comments and recommendations shall be submitted using established deficiency reporting systems in accordance with COMNAVAIRFORINST 4790.2.

1-14. ENGINEERING DRAWINGS. Government engineering drawings are available to the fleet by submitting a letter of request to Commanding Officer, Naval Air Technical Data and Engineering Service Command, Naval Air Station North Island P.O. Box 357031, Building 90 Distribution, San Diego, CA 92135-7031. Each request should include the equipment nomenclature, part number, and CAGE code. The drawings will be provided in the form of aperture cards (Automatic Data Processing Punch Cards).

1-15. TECHNICAL DIRECTIVES AND FORMS. Activities may obtain copies of Technical Directives and Forms by submitting a requisition using Routing Identifier NFZ to the Naval Inventory Control Point-Philadelphia using the Automatic Digital Network (AUTODIN). Transmissions should be made to the routing indicator (COMMRI RUCIZZA). In cases where AUTODIN capability is not available, full MILSTRIP in message format should be submitted to DAAS Dayton, Ohio (COMMRI RUEOZNA).

1-16. QUALITY ASSURANCE. Quality assurance steps are provided for critical operations. When a step is underlined, the Aircrew Survival Equipmentman shall perform the operation, then have performance verified by a Quality Assurance Inspector (CDI-CDQAR-QAR) as established within the Naval Aviation Maintenance Program (COMNAVAIRFORINST 4790.2) prior to proceeding to the next operation. In no case shall an Aircrew Survival Equipmentman perform his/her own quality assurance inspection.

1-17. ALLOWANCE LISTING OF RESCUE AND SURVIVAL EQUIPMENT.

1-18. NAVAIR 00-35QH-2 establishes the allowance listing for applicable rescue and survival equipment. The allowance is generally determined by the number of aircrewmember seats (stations) aboard the aircraft and the specific duties required for the aircrewmember. A specific spare allowance is provided for extra flight crew requirements, assemblies down for rework awaiting replacement units and inspection cycle spares.

1-19. LEVELS OF MAINTENANCE.

1-20. Inspection, repair, and overhaul shall be performed at the established level of maintenance in accordance with and as defined in the COMNAVAIRFORINST 4790.2. In cases of necessity, such as at very small activities, Organizational and Intermediate Levels may be combined within local capabilities. It is recognized that, due to conditions other than those assumed here, minor deviations to procedures outlined in this manual may be unavoidable.

1-21. SUPPLEMENTARY PUBLICATIONS.

1-22. In addition to Interim Aircrew Systems Bulletins and Changes and Aircrew Systems Bulletins and Changes which are still in effect, the following publications supplement this volume.

1. NAVAIR 00-35QH-2, Allowance List, Aviation Life Support System and Airborne Operation Equipment for Aircraft Squadrons Navy and Marine Corps.

2. COMNAVAIRFORINST 4790.2, Naval Aviation Maintenance Program.

3. NAVAIR 11-100-1, Cartridges and Cartridge Actuated Devices for Aircraft and Associated Equipment.

4. NAVORD OP2213, Pyrotechnic, Screening and Dye Marking Devices.

5. NAVSUP 600, Naval Logistical Library.

6. NAVSUPINST 4423.29, Naval Material Command (NMC) Uniform Source, Maintenance and Recoverability (SM&R) Codes.

7. NAVAIR 01-1A-509, Cleaning and Corrosion Control Manual.

8. Applicable Aircraft Maintenance Instruction Manuals and NATOPS Flight Manual.

9. NAVAIR 16-30URT33-1, Beacon Sets, Radio AN/URT-33A.

10. NAVAIR 16-30PRC90-2, Radio Set AN/PRC-90 and AN/PRC-90-2.

11. NAVAIR 16-30PRC90-4, Radio Set AN/PRC-90 and AN/PRC-90-2 Illustrated Parts Breakdown.

12. NAVAIR 16-35PRC112-1, Radio Set AN/PRC-112-1 and Loader KY-913/PRC-112.

13. NAVAIR 16-35PRC125-1, Radio Set AN/PRC-125.

14. NAVAIR 16-30PRT5-1, Transmitting Set, Radio AN/PRT-5.

15. NTTP 3-50.1 Series, Naval Search and Rescue (SAR) manual.

16. NAVAIR 00-25-300, Naval Air System Command Technical Directives System.

17. NAVAIR 16-45-716, Portable Refill System (PRS).

18. NAVAIR 16-30PRC149-1, Radio Set AN/PRC-149 and C-12631/PRC-149, Radio Control Unit.

19. NAVAIR 16-30URT140-1, Radio Beacon Set, AN/URT-140.

20. NAVAIR 16-35PRC-112-1-1, Radio Set AN/PRC-112B, Radio Set AN/PRC-112B1, Quickdraw Interrogator Set 1794AS0993, Quickdraw 2 Interrogator Set 0983, Suitcase Interrogator Set 01-P389325.001 and Radio Programming Set 0984.

21. NAVAIR 16-30PRQ7-1, Radio Set AN/PRQ-7, P/N 4866112-101-11.

1-23. DEFINITIONS.

1-24. The following is a list of definitions used in this volume:

WARNING

Indicates danger to personnel. The warning precedes the item to which it refers.

CAUTION

Indicates danger to the equipment. The caution precedes the item to which it refers.

NOTE

An information item. The note may precede or follow the item to which it refers.

THIS PAGE INTENTIONALLY LEFT BLANK.

CHAPTER 2

MAINTENANCE CONCEPTS, SCHEDULING AND DOCUMENTATION

Section 2-1. Maintenance Concepts

2-1. GENERAL.

2-2. NAVAL AVIATION MAINTENANCE PROGRAM. All maintenance and inspection actions upon Aviation Life Support Systems (ALSS) equipment shall be made as part of the Naval Aviation Maintenance Program in accordance with COMNAVAIRFORINST 4790.2.

2-3. LEVELS OF MAINTENANCE. Maintenance of ALSS equipment shall be performed at the established level of maintenance in accordance with COMNAVAIRFORINST 4790.2.

2-4. QUALIFIED PERSONNEL. Refer to COMNAVAIRFORINST 4790.2 for qualifications of personnel authorized to perform maintenance actions on ALSS equipment.

Section 2-2. Maintenance Scheduling

2-5. GENERAL.

2-6. INSPECTION CYCLES. Scheduled maintenance requirements for aircraft and man-mounted equipment are published in the applicable aircraft maintenance requirement cards and this manual.

NOTE

To meet unusual situations and facilitate workload scheduling, refer to COMNAVAIRFORINST 4790.2 for authorized deviations to scheduled phase inspection intervals.

Section 2-3. Accident Evaluation

2-7. AIRCRAFT ACCIDENT REPORT INSPECTION.

2-8. Any Aviation Life Support System Equipment along with related subassemblies or equipment which have been recovered following use in an emergency ditching/bailout or ejection (refer to NAVAIR 13-1-6.2 for personnel and drogue parachutes) will be returned to the nearest Naval Supply Activity for shipment via traceable means to: Code 4.6.3.3, Naval Air Warfare Center Aircraft Division, Bldg 2187, 48110 Shaw Rd., Unit 5, Patuxent River, MD 20670-1906.

NOTE

Under no circumstances will any piece of Aviation Life Support System equipment which has been subjected to ditching/bailout or ejection be returned to service.

2-9. Stencil outside of container in 1-in. letters as follows: THIS EQUIPMENT HAS BEEN USED IN AN EMERGENCY. These items of equipment are required for evaluation and determination of design deficiency and to establish requirements for product improvement.

Section 2-4. Maintenance Documents

2-10. GENERAL.

NOTE

With the exception of batteries, items reaching overage while packed in survival kits and rafts shall remain in service until the next inspection cycle of the completed assembly.

2-11. DOCUMENTING MAINTENANCE ACTIONS. Upon completion of any maintenance action (e.g., inspections, repairs, modifications), appropriate entries shall be made on applicable maintenance records, in accordance with COMNAVAIRFORINST 4790.2. The entries by the Aircrew Survival Equipmentman shall provide a systematic record of equipment history and the documentation of all maintenance actions performed on the equipment.

2-12. MAINTENANCE DOCUMENTS. Refer to COMNAVAIRFORINST 4790.2 for documents used to record history or to document maintenance actions or for additional information for completion of maintenance records. These records are designed to provide continuous configuration and inspection records throughout the service life of ALSS assemblies and their components.

Section 2-5. Illustrated Parts Breakdown Information

2-13. GENERAL.

2-14. This section explains the Illustrated Parts Breakdown (IPB) for ALSS equipment. The IPB can be found at the end of each chapter where applicable. The IPB should be used during maintenance when requisitioning and identifying parts.

2-15. SYMBOLS AND ABBREVIATIONS. Symbols and abbreviations used in the Illustrated Parts Breakdown are as follows:

Symbol	Definition
---*---	Closure (end) of attaching parts
#	Selected part, only one used
x	By (used in dimensions 12 in. x 6 in.)
&	And

Abbreviation	Definition
AR or A/R	As Required
CAGE	Commercial and Government Entity
COML	Commercially available
FIG, Fig	Figure
GAPL	Group Assembly Parts List
GFE	Government Furnished Equipment
IPB	Illustrated Parts Breakdown
L.H.	Left Hand
MAINT	Maintenance
NHA	Next Higher Assembly
No.	Number
RECOVER, RECY	Recoverability
REF	Reference
R.H.	Right Hand
SM&R	Source, Maintenance and Recoverability
Spec. Cont.	
Dwg. or SCD	Specification Control Drawing

2-16. GROUP ASSEMBLY PARTS LIST.

2-17. The Group Assembly Parts List (GAPL) contains illustrations and parts lists for each major assembly. These illustrations and accompanying lists show how the major assemblies are disassembled into subassemblies and detail parts. Each item illustrated is indexed for identification purposes. Each illustration is accompanied by a parts list providing a part number, description, and quantity for each item. The list is arranged in disassembly order. Through the use of a system of indentation, the relationship of the detail parts to the subassemblies and the relationship of the subassemblies to the main assembly, is shown.

2-18. FIGURE AND INDEX NUMBER COLUMN. The figure and index number of each item shown on the corresponding illustration appears in the Figure and Index Number Column, with the exception of assemblies and subassemblies which are not illustrated in assembled form. In these cases, the assemblies or subassemblies are listed but not indexed. The component parts thereof are both listed and indexed.

2-19. PART NUMBER COLUMN. This column contains the contractor's drawing number, government standard number, vendor drawing number or identifies the part as being commercial hardware (COML). Government standard parts are listed using the applicable MS, AN, AF, NAS, MIL, or JAN part number. Where the part number is controlled by a military specification, this specification number is listed in the Description Column.

2-20. DESCRIPTION COLUMN. This column lists the item name plus those modifiers necessary to identify the item. The description of a vendor-supplied item includes a five-digit number which identifies the manufacturer. This is the Commercial and Government Entity (CAGE) code. To correlate this CAGE code to the manufacturer's name, refer to the cataloging handbook H4/H8. CAGE codes may be omitted for prime manufacturer's parts and for government standard parts. When applicable, contractor's control drawing numbers and reference designations of electronic parts are also listed for general reference. When a separate exploded view is used to show the detail parts of an assembly or subassembly, the Description Column contains an appropriate figure cross-reference in parenthesis following the description. This cross-reference appears both in the listing where the assembly is first described, and in the listing which the assembly is broken down. In the latter case, the abbreviation REF will appear in the Units Per Assembly column. Commercial hardware items (COML) are fully described so that they may be pro-

cured from normal commercial sources. Parts stocked in kits are identified with kit component code in this column, i.e., KD.

2-21. Indentation. The indentations headed "1" through "7" in the Description Column are provided to show the relationship of assemblies and their detail parts. The detail parts are indented one space to the right and listed below the assembly to which they belong. Determine the next higher assembly (NHA) of any detail part by locating, in the next space to the left (excluding attaching parts) the first item above the detailed part.

```
1 2 3 4 5 6 7

ARTICLE (or MAIN ASSEMBLY)
. Detailed parts for ARTICLE (or MAIN ASSEMBLY)
. ASSEMBLY
    (ATTACHING PARTS)
. ATTACHING PARTS FOR ASSEMBLY
    ---*---
. . Detailed parts for ASSEMBLY
. . SUBASSEMBLY
      (ATTACHING PARTS)
. . ATTACHING PARTS FOR SUBASSEMBLY
      ---*---
. . . Detailed parts for SUBASSEMBLY
. . . SUB-SUBASSEMBLY
        (ATTACHING PARTS)
. . . ATTACHING PARTS FOR SUB-SUBASSEMBLY
        ---*---
. . . . Detailed parts for SUB-SUBASSEMBLY
```

2-22. Attaching Parts. Attaching parts are items used to attach parts or assemblies to each other and follow immediately after the part to be attached. The attaching parts have the same indentation as the part attached. The caption "(ATTACHING PARTS)" is placed on the line immediately above the listing of attaching parts. The separation symbol ---*--- appears on the line immediately under the last attaching part. Quantities of attaching parts are listed per unit. For example, if two fittings are required for each assembly and one bolt is required to attach each fitting, the correct listing would be:

```
. FITTING ASSEMBLY, Hinge ..................... 2
    (ATTACHING PARTS)
. BOLT ........................................... 1
    ---*---
```

2-23. UNITS PER ASSEMBLY COLUMN. This column shows the quantity of an item required in the next higher assembly. The abbreviation AR indicates when the quantity is "As Required".

2-24. USABLE ON CODE COLUMN. Usable on codes are used to indicate part usage where various models and serial numbers of the equipment or similar parts within the equipment use different parts. A code is assigned to each variation of the equipment and entered into the GAPL when a part is used only in a specified variation. Where no code is entered, the part is used on all units covered by the GAPL or when no variations from the original equipment exist.

2-25. NUMERICAL INDEX.

2-26. The numerical index which follows each GAPL contains all the part numbers listed in that GAPL, arranged in alphabetical-numerical sequence.

2-27. PART NUMBER COLUMN. This column contains the part numbers of the parts and assemblies. Part number arrangement starts at the extreme left-hand position and continues left to right, one position at a time, according to the following order or precedence:

Space	(blank column)
Diagonal	(Slant)
Point	(period)
Dash	(hyphen)
Letters	A through Z
Numerals	0 through 9

NOTE

Spaces, diagonals, points, and dashes do not appear in the extreme left-hand position of the part numbers. However, they may be used in the second and succeeding positions and take precedence over letters and numbers as indicated above.

2-28. FIGURE AND INDEX NUMBER COLUMN. In this column, the digits preceding the dash refer to the figure in which the parts are illustrated. The digits following the dash are the index numbers.

2-29. SOURCE, MAINTENANCE AND RECOVERABILITY (SM&R) CODE COLUMN. The five digit SM&R codes, assigned by Naval Air Systems Command Representatives are reflected in the SM&R code column. The code format is composed of three parts consisting of a two-position Source Code, a two-position Maintenance Code and a one-position Recoverability Code. See table 2-1 for basic information.

NOTE

For more complete information on Uniform SM&R Codes, refer to the current issue of OPNAVINST 4410.2A and the current issue of NAVSUPINST 4423.29.

Table 2-1. Source, Maintenance, and Recoverability (SM&R) Code Definitions

SOURCE			MAINTENANCE			
1ST POS	2ND POSITION		3RD POSITION		4TH POSITION	
MEANS OF ACQUIRING SUPPORT			USE: LOWEST LEVEL AUTHORIZED TO REMOVE/REPLACE THE ITEM		REPAIR: LOWEST LEVEL WITH CAPABILITY AND RESOURCES TO PERFORM COMPLETE REPAIR ACTION	
P	A	ITEM: STOCKED	O	ORG/UNIT	O	ORG/UNIT
	B	ITEM: STOCKED, INSURANCE	2	MINESWEEPER	2	MINESWEEPER
	C	ITEM: STOCKED, DETERIORATIVE	3	SUBMARINES	3	SUBMARINES
	D	ITEM: SUPPORT, INITIAL ISSUE OF OUTFITTING & STOCKED ONLY FOR ADDITIONAL INITIAL ISSUE	4	AUX/AMPHIB	4	AUX/AMPHIB
			5	DESTROYER, FFG	5	DESTROYER, FFG
	E	EQUIPMENT: SUPPORT, STOCKED FOR INITIAL ISSUE OR OUTFITTING OF SPECIFIED MAINTENANCE ACTIVITIES	6	CRUISER/CARRIER	6	CRUISER/CARRIER
	F	EQUIPMENT: SUPPORT, NON-STOCKED, CENTRALLY PROCURED ON DEMAND	F	I/AFLOAT	F	I/AFLOAT
	G	ITEM: STOCKED FOR SUSTAINED SUPPORT, UNECONOMICAL TO PRODUCE AT A LATER TIME				
	H	ITEM: STOCKED, CONTAINS HAZMAT, HMIS/MSDS REPORTING REQUIRED				
	R	TERMINAL OR OBSOLETE, REPLACED			G	I/ASHORE AND AFLOAT
	Z	TERMINAL OR OBSOLETE, NOT REPLACED	G	I/ASHORE AND AFLOAT		
K	D	ITEM: DEPOT O/H & MAINTENANCE KITS				
	F	ITEM: MAINTENANCE KIT, PLACE AT O, F, H, L			H	I/ASHORE
	B	ITEM: IN BOTH DEPOT REPAIR & MAINT. KITS				
M	O	MFR OR FAB AT UNIT LEVEL	H	I/ASHORE		
	F	MFR OR FAB AT INTERMEDIATE/DS LEVEL			K	CONTRACTOR FACILITY
	H	MFR OR FAB AT INTERMEDIATE/GS LEVEL				
	L	MFR OR FAB AT SPECIALIZED REPAIR ACTIVITY (SRA)				
	G	MFR OR FAB AT INTERMEDIATE BOTH AFLOAT AND ASHORE	K	CONTRACTOR FACILITY	L	INTERMEDIATE SRA
	D	MFR OR FAB AT DEPOT MAINTENANCE LEVEL				
A	O	ITEM: ASSEMBLED AT ORG/UNIT				
	F	ITEM: ASSEMBLED AT INTERMEDIATE LEVEL - AFLOAT			D	DEPOT
	H	ITEM: ASSEMBLED AT INTERMEDIATE LEVEL - ASHORE	L	INTERMEDIATE SRA		
	L	ITEM: ASSEMBLED AT SRA				
	G	ITEM: ASSEMBLED AT INTERMEDIATE BOTH AFLOAT AND ASHORE			Z	NON-REPAIRABLE
	D	ITEM: ASSEMBLED AT DEPOT MAINTENANCE LEVEL				
X	A	ITEM: REQUISITION NEXT HIGHER ASSEMBLY	D	DEPOT		
	B	ITEM: NOT PROCURED OR STOCKED, AVAILABLE THRU SALVAGE, REQ. BY CAGE/PART NUMBER			B	RECONDITION
	C	INSTALLATION DRAWING, DIAGRAM, INSTRUCTION SHEET, IDENTIFY BY CAGE/PART NUMBER	Z	REF ONLY		
	D	NON-STOCKED. OBTAIN VIA LOCAL PURCHASE				

RECOVERABILITY		SERVICE OPTION	
5TH POSITION		6TH POSITION	
DISPOSITION: WHEN UNSERVICEABLE OR UNECONOMICALLY REPAIRABLE, CONDEMN OR DISPOSE.		ASSIGNED TO SUPPORT ITEMS TO CONVEY SPECIFIC INFORMATION TO THE SERVICE'S LOGISTICS COMMUNITY/OPERATING FORCES.	
O	ORG/UNIT	1	I-LEVEL 1ST DEGREE
F	I/AFLOAT	2	I-LEVEL 2ND DEGREE
G	I/ASHORE AND AFLOAT	3	I-LEVEL 3RD DEGREE
H	I/ASHORE	6	COMMERCIAL ITEM, ORGANICALLY MFR'D
K	DLR; CONTRACTOR FACILITY	8	NON-CONSUMABLE; 2ND DEGREE ENGINE I-LEVEL
L	INTERMEDIATE SRA LEVEL	9	NON-CONSUMABLE; 3RD DEGREE ENGINE I-LEVEL
D	DLR; CONDEMN OR DISPOSE AT DEPOT	E	END TO END TEST
		J	INTER-SERVICE DLR REPAIRABLE BELOW D-LEVEL
Z	NON-REPAIRABLE	P	PROGRESSIVE MAINTENANCE
		R	GOLD DISC REPAIR
A	NON-REPAIRABLE BUT REQUIRES SPECIAL HANDLING	T	TRAINING DEVICES

CHAPTER 3

RESERVED

THIS PAGE INTENTIONALLY LEFT BLANK.

CHAPTER 4

RESERVED

THIS PAGE INTENTIONALLY LEFT BLANK.

CHAPTER 5

RESERVED

THIS PAGE INTENTIONALLY LEFT BLANK.

CHAPTER 6

BREATHING AIR TESTING PROCEDURES

Section 6-1. Procedures

6-1. GENERAL.

6-2. AIR SAMPLING. The "I" level breathing air compressors used to service the CQU-10/U and MRS-III are required to have semi-annual air quality testing. Costs for testing and shipping will be the responsibility of the individual command. Below are two certified/accredited sources for the air testing. Commands may choose either of the two sources or a local certified/accredited air testing facility. Strict compliance with testing and record keeping is required by each command maintaining a breathing air compressor.

CAUTION

Activities receiving a failed Air Quality Test Report from the testing facility shall immediately suspend operations and perform maintenance on the compressor in accordance with manufacturer's instructions and re-test. If a second failed test report is received commands shall replace the compressor. Any CQU-10/U, MRS-III, HABD or SEA that was serviced directly or indirectly from the failed compressor shall be emptied, purged and refilled by another clean air source.

NOTE

AIMD breathing air compressors aboard ships are exempt from testing during deployment unless there is suspicion of contaminated air. An air quality test shall be completed within 1 month prior to deployment and within 1 month of return from deployment. Maintain a record of all testing.

Ensure Kits are ordered in a timely manner for locations outside CONUS.

6-3. SOURCES FOR AIR TESTING. Instructions for testing compressor-breathing air are provided with the kits. Questions about the testing procedures can be made directly to the company or to the NA 13-1-6.5 Manual Manager via the pma202website at https://home.navair.navy.mil/pma202/ or by phone at DSN 342-8423, Comm 301-342-8423.

1. **Analytical Chemists, Inc.** Analytical Chemists, Inc is an accredited (AIHA, ISO17025, NAVSEA, /P9290 Qualified) laboratory. Upon request the company will ship a complete testing kit to the command with full instructions on how to use the kit and take samples. The test kit costs $99.00. All required hardware is included with the kit. Upon completion of testing the command is responsible for shipping the Test Kit with samples back to the company. The company will provide a faxed document of the test results within 24 hours after receipt of the test kit.

NOTE

If command receives a failed test, Analytical Chemists will ship another test kit free of charge for the re-test and provide suggestions on how to correct the problem.

Analytical Chemists Inc.
7535 Convoy Court
San Diego, CA 92111
http://www.airanalysis.com/smart.htm
(click on US Military)
800-466-8898 or 858-560-4916 (voice and fax)
Email: Tech@AirAnalysis.com or
dhe0124@aol.com

2. **TRI Air Testing Inc.** TRI is an AIHA accredited laboratory for industrial hygiene, provides compressed air testing and indoor testing for commercial, medical, pharmaceutical, dive and fire department

applications. Commands have the option to purchase the champion 35 Test Device or choose not to purchase the Test Device and rent the Test Device when ordering Air Sampling Kits for the semi-annual test. Renting the Test Device Kit is free; commands are responsible for round trip shipping and cost of the Air Sampling Test Kit.

NOTE

Commands choosing to purchase the Champion 35 Test Kit should inform the company they have one when ordering air-sampling kits for the semi-annual test. The Champion 35 is only for use when utilizing TRI Air Testing Inc.

Materials Required

Quantity	Description	Reference Number
1	Test Device	Champion 35 (Note 1)
As Required	Test Kit, Air Sampling, Grade D	(Note 1)
1	Scuba Fill Adapter	108325 (Note 2)

Notes: 1. "I" level activities are authorized to purchase the Champion 35 Test Kit. The Test Kit is a one-time purchase of approximately $345.00. Air Sampling Test Kits ($89 each) will have to be purchased separately when performing semi-annual test. Test Kits and Air Sampling Kits can be ordered by phone, on-line, or by fax by contacting the following source:

TRI AIR TESTING, INC.
1607 N. Cuernavaca Drive STE. 500
Austin, TX 78733-8378
(800) 880-8378
(512) 263-0498
(512) 263-7039 (fax)
www.airtesting.com

2. This adapter is required for use with Champion 35 Test Kit. AIMD's may have this part in their tool inventory, if not, open purchase from the following source:

Aqua Lung
Vista, CA
(877) 252-3483
(760) 597-4914

3. The following pictures are for identifying individual components and clarifying attachment of the TRI Champion 35 Test Kit to compressor.

SCUBA Fill Adapter (P/N 108325) Test Kit Adapter

Adapters Connected to Other Adapters

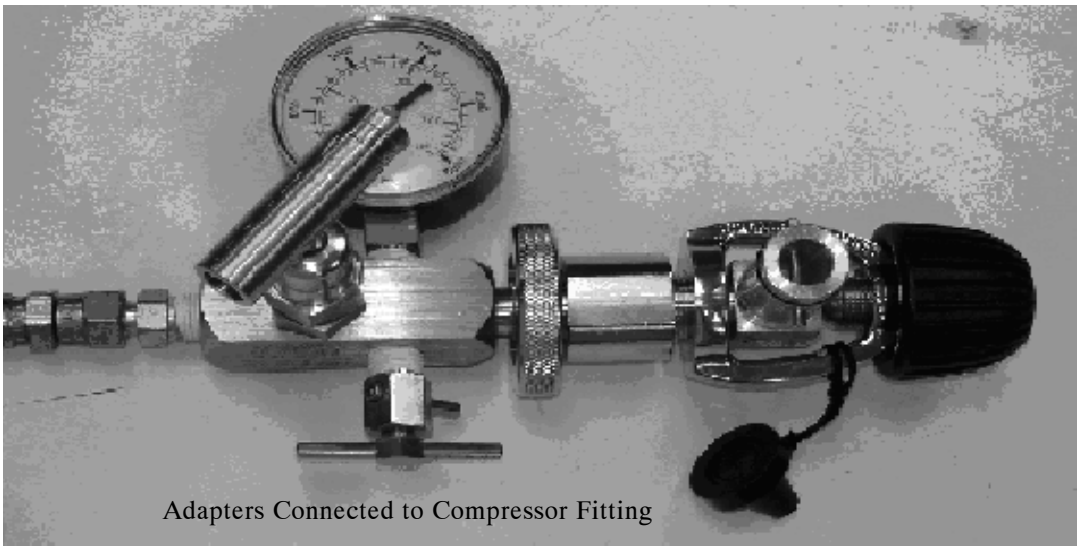

Adapters Connected to Compressor Fitting

Test Device Attached to Adapters

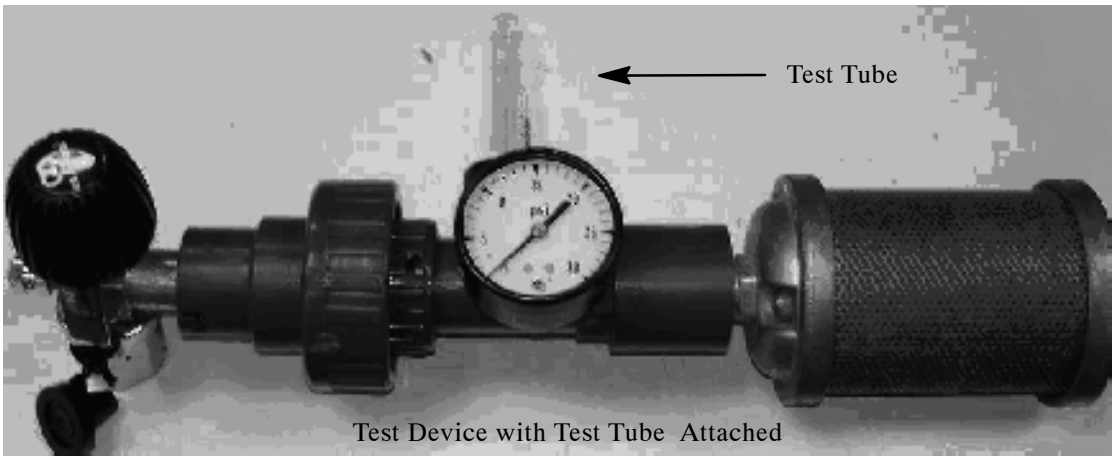

Test Device with Test Tube Attached

THIS PAGE INTENTIONALLY LEFT BLANK.

CHAPTER 7

SURVIVAL EGRESS AIR (SEA) FOR AIRCREW (SRU-42/P) AND MARINE TROOP PASSENGERS (SRU-43/P)

Section 7-1. Description

7-1. GENERAL.

7-2. For continuity throughout this chapter the Survival Egress Air, (SRU-42/P and SRU-43/P) will be referred to as the SEA, SEA 1.5 or SEA 2.0 unless otherwise stated.

CAUTION

This chapter references the Helicopter Egress System for (Marine Troop) Passengers (HESP), which is currently in the engineering stages of development and will be added to this chapter and associated manuals prior to fielding. **The SEA 2.0 is for use only with the HESP system.** The SEA 2.0 cannot be used by aircrew or with the current Passenger Helicopter Aircrew Breathing Device (PHABD) system currently in use by Marine Troop Passengers.

7-3. The SEA is a compact, lightweight breathing assembly with a rated cylinder pressure of 3000 psi (Figure 7-1 and Figure 7-2). It is intended for emergency use by helicopter, E-2/C-2, and V-22 tilt-rotor aircrew and Marine troop passengers in the event of an over water ditching. The SEA provides emergency breathing air upon demand during egress from submerged aircraft. The SEA is compatible for use only with normal, atmospheric, compressed air (21% oxygen and 79% nitrogen by volume).

7-4. This manual does not apply to CNO approved Water Survival Sites. Water Survival Sites training assets shall be maintained and inspected by approved water survival personnel as outlined in a CNO approved SEA/LV2 SOP manual, NAVOPMEDPUB P-1550-2.

7-5. CONFIGURATION.

7-6. The SEA LV2 is manufactured by Aqua Lung (CAGE 94120). The SEA is a compact emergency underwater breathing device consisting of a first-stage regulator assembly, cylinder, hose and second-stage regulator assembly. All black chrome components, with the exception of the burst plug, are utilized for low reflective signature. It has a flexible low profile, low-pressure hose, an ergonomic low-volume second-stage, low profile dial pressure gauge, and an "On/Off" handwheel.

7-7. There are two authorized variations of the SEA system, SEA 1.5 and SEA 2.0 both having the LV2 (low volume) second stage assembly. Both systems are functionally and mechanically identical.

NOTE

Marine Troop passengers require Shallow Water Egress Training (SWET) prior to carrying or using the SEA. Non-Marine Troop passengers are not authorized to carry or use the SEA unless they have documented water survival training in accordance with Naval Survival Training Institute. (NSTI).

Breathing time depends upon the depth of water, water temperature, and the individual using the SEA.

Figure 7-1. SEA LV2 1.5
(For Navy and Marine Corp Aircrew)

Figure 7-2. SEA LV2 2.0
(For Marine Troop Passengers)
(TBD)

7-8. SEA 1.5 SYSTEM FOR AIRCREW. The SEA 1.5 system is for use by Navy/Marine Corps aircrew personnel only. The SEA 1.5 shall be carried in the current HABD holster/pocket used on the SV-2, AI-SAP, AIRSAVE survival vests, and the HBU-23/P and TRISAR harnesses worn by SAR crewmen. The SEA 1.5 system has a cylinder volume of 1.5 cf and provides approximately 1 to 3 minutes of breathing air and fits into the same holster/pocket as the current HABD. There are no survival equipment configuration changes required to carry the SEA 1.5. When fielded the SEA 1.5 will replace the HABD at the next scheduled 360-day inspection.

7-9. SEA 2.0 SYSTEM FOR MARINE TROOP PASSENGERS. The SEA 2.0 system is for use by Marine Troop Passengers only and is part of the Helicopter Egress System for Passengers (HESP). For the Marine troop passengers the SEA 2.0 shall be carried on the HESP system. The SEA 2.0 system has a cylinder volume of 2.0 cf and is approximately 1 1/2 inches longer and provides 1 to 4 minutes of breathing air. The hose length for the SEA 2.0 system is TBD. The HESP is designed for Marine Troops wearing full battle gear; Outer Tactical Vest (OTV) or Modular Tactical Vest (MTV).

7-10. SUPPORT EQUIPMENT.

7-11. The Mobile Refill Station, (MRS-III) is provided at both I-Level and O-Level maintenance activities for use with the SEA. For maintenance procedures on the MRS-III, refer to NAVAIR 19-1-270. Fleet Support Team (FST) for the MRS-III is Lakehurst NJ, and Patuxent River, MD.

7-12. REFERENCE NUMBER, ITEMS, AND SUPPLY DATA.

7-13. Section 7-4, Illustrated Parts Breakdown, contains information on the SEA assembly. It contains figure and index numbers, reference or part numbers, description quantity per assembly and Source, Maintenance and Recoverability (SM&R) codes for all replaceable components of the SEA.

Section 7-2. Modifications

7-14. GENERAL.

7-15. There are currently no directives affecting the SEA.

Section 7-3. Maintenance

7-16. GENERAL.

7-17. The maintenance overhaul cycle for the SEA is every 720 days from the date Placed-In-Service. Maintenance of the SEA shall consist of inspections, filling, cleaning, and replacement of failed and over-aged components. During maintenance refer to Figures 7-3 and 7-4 for a complete breakdown and nomenclature of parts.

7-18. Intermediate Level maintenance activities are authorized to Place-In-Service, inspect, repair, remove and replace components and perform the 720-day overhaul of the SEA. Organizational maintenance activities are authorized to top-off, remove and replace mouthpiece and mouthpiece cover as well as perform the 90-day inspection. Aircrew is responsible for Pre-flight and Post-flight inspections as directed by NATOPS and this manual.

7-19. INSPECTIONS.

Materials Required

Quantity	Description	Reference Number
1 (Note 2)	IP Test Gauge 0-400 psi	111610
1 (Note 2)	Adjustable Spanner Wrench	107394
1 (Note 2)	Notched Straight Slot Screwdriver	9-47448
1 (Note 2)	Retaining Ring Removal Tool	100188
1 (Note 2)	Kit, O-ring Tool	944022
1 (Note 2, 3)	Seat Extractor	109437
1 (Note 2, 3)	O-ring Tool (for Hose O-ring)	10-102-400
1 (Note 2)	Bottle Vise Clamp	100398
1 (Note 4)	3/4-Inch (Thin) Open-end Wrench	LTA2428 44474 (Sears)
1 (Note 5)	11/16-Inch Open-end Wrench	-------
1 (Note 5)	3/8-Inch Socket	-------
1 (Note 5)	3/4-Inch Open-end Wrench	-------
1 (Note 5)	9/16-Inch Open-end Wrench	-------
1 (Note 5)	7/8-Inch Open-end Wrench	-------
1 (Note 5)	3/16-Inch Hex Key Socket Wrench	-------
1 (Note 5)	1 3/16-Inch Crows Foot	-------
1 (Note 5)	9/16-Inch Crows Foot	-------
1 (Note 5)	3/4-Inch Crows Foot	-------
1 (Note 5)	1/4-Inch Nut Driver	-------
1 (Note 5)	Flex Handle Drive	-------
1 (Note 5)	Wire Cutters	-------
As Required	Christo Lube (2 oz). or Christo Lube (8 oz)	NIIN-01-441-9016 or NIIN-01-364-0218
As Required	Distilled Vinegar, White, Household Grade	-------
As Required	Mild Detergent, Household Grade	-------
As Required	Torque Wrench Foot-Pound	-------
As Required	Torque Wrench Inch-Pound	-------

Notes:
1. This is a complete list of Materials Required for inspection and maintenance on the SEA. Use of these items will be identified throughout the inspection and maintenance procedures.
2. These tools were initially distributed to the fleet AIMD's/MALS for maintenance of the HABD and/or SEA. Additional or replacement tools can be purchased directly from Aqua Lung. Contact info: 1-877-252-3483, 1-760-597-5000, www.aqualung.com
3. Use these tools only for their intended purpose. They are not brass and will damage components of the SEA.
4. This thin wrench is required to remove and replace the hose from the Second-stage assembly. This tool is available from either:
   Aqua Lung: 1-877-252-3483, www.aqualung.com
   Snap-On tools: 1-877-762-7664, http://Buy1.snapon.com or
   Sears Craftsman at www.sears.com
5. These are common tools.
6. In some cases, sockets can be used in place of open-end wrenches or crows foot.

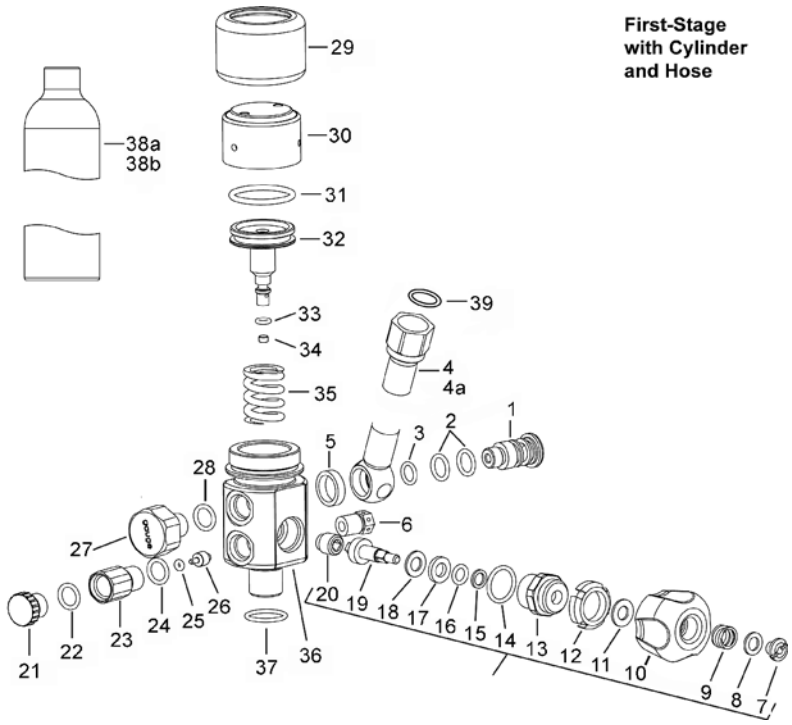

Key	Part #	Description	Key	Part #	Description
1	108305	Swivel Adapter, Black	21	108307	Fill Port Plug
2	**820312**	**O-Ring**	**22**	**820319**	**O-Ring**
3	**820311**	**O-Ring**	23	108308	Fill Adapter Port
4	108391	Hose Assy, 20” Black	**24**	**820319**	**O-Ring**
4a	TBD	Hose Assy TBD	**25**	**820304**	**O-Ring**
5	108306	Swivel Spacer, Black	26	108309	Check Valve
6	**054201**	**Burst Plug, Chrome**	27	742537	Pressure Indicator, Dial, Black
7	108304	Retaining Nut, Black			
8	108329	Washer, Handwheel	**28**	**820319**	**O-Ring**
9	108316	Spring, Handwheel	29	108302	Cap Protector
10	108313	Handwheel	30	108303	Piston Cap
11	108326	Washer	**31**	**820062**	**O-Ring**
12	108317	On-Off Indicator Ring	32	106769	Piston
13	108318	Bonnet	**33**	**820007**	**O-Ring**
14	**820015**	**O-Ring**	**34**	**106726**	**HP Seat (Note 4)**
15	**828009**	**Backup Ring**	35	106771	Spring
16	**820010**	**O-Ring**	36	108312	First-Stage Body
17	108328	Spacer	**37**	**820316**	**O-Ring**
18	**108327**	**Washer**	38a	079105	Cylinder, 1.5 cu. ft.
19	108319	Stem	38b	079120	Cylinder, 2.0 cu. ft.
20	**108322**	**Valve Seat**	**39**	**820010**	**O-Ring (Note 1)**

Notes:
1. O-Ring P/N 820010 is part of the Second-Stage Service Kit but is required to be installed during the First-Stage assembly prior to performing the First-Stage Test.
2. Items that are highlighted in BOLD are part of the First-Stage Service Kit and shall be discarded and replaced during overhaul or repair.
3. Service Kit for the First-Stage has additional O-Rings (P/N 820312, 1 each, and 820304, 1 each). These parts may be discarded or retained for future use.
4. HP Seat (P/N 106726) shall not be discarded. It is used in the reassembly process.

Figure 7-3. First-Stage Assembly

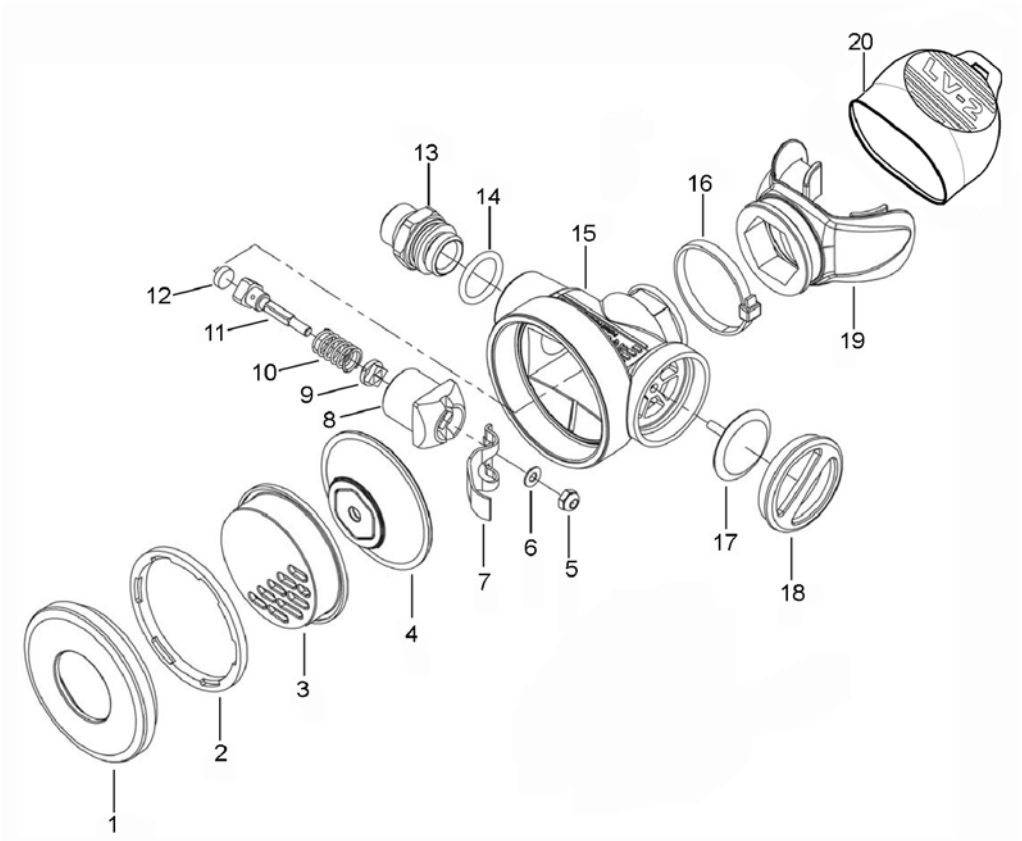

Key	Part #	Description	Key	Part #	Description
1	100652	Front Cover	11	104122	Poppet
2	100119	Retaining Ring	**12**	**106738**	**LP Seat**
3	100104	Purge Cover	13	108438	Inlet, Black
4	100181	Diaphragm	**14**	**820015**	**O-Ring**
5	**102510**	**Locknut**	15	108374	Box Bottom
6	104129	Washer	**16**	**104913**	**Clamp**
7	100923	Lever	**17**	**100122**	**Exhaust Valve**
8	100945	Valve Body	18	108371	Exhaust Cover
9	**104134**	**Poppet Bearing**	19	108373	Mouthpiece, LV2
10	104127	Spring	20	108451	Mouthpiece Cover, LV2

Notes:
1. O-Ring, P/N 820010 is part of the Second-Stage Service Kit but is required to be installed during the First-Stage assembly for testing.
2. Items that are highlighted in BOLD are part of the Second-Stage Service Kit and shall be discarded and replaced duing overhaul or repair.
3. Service Kit for the Second-Stage has additional Exhaust Valves (P/N 100922 x 2, are for the SEA MK Second-Stage). These parts shall be discarded.

Figure 7-4. Second-Stage Assembly

WARNING

The only interchangeable components between the SEA 1.5 and the SEA 2.0 are the First-Stage assembly and the Second-Stage assembly. Refer to IPB.

NOTE

Inspections shall be documented in accordance with COMNAVAIRFORINST 4790.2.

7-20. PLACE-IN-SERVICE INSPECTION. (Intermediate Level) Perform the Place-In-Service inspection as follows:

NOTE

Failure of the SEA during any portion of the Place-In-Service renders the item Non-RFI and must be reported in accordance with COMNAVAIRFORINST 4790.2.

"I" level activities shall have a sufficient number of RFI SEA's in the rotable pool when HABD's are turned in for their 360 day inspection. A one for one replacement shall be given to the "O" level activities. For disposition "I" level activities can disassemble HABD and discard or turn into supply in Condition Code "F". Recommend disassembled parts be locally recycled.

1. Inspect the SEA externally for any signs of damage, dents, corrosion and legibility of cylinder markings. The SEA cylinder does not require hydrostatic testing. (Figure 7-5)

2. Inspect hose along its length for any signs of deterioration, damage, blistering, abrasion or corrosion on fittings.

3. Hand inspect all fittings for security of attachment.

4. If no discrepancies are noted continue with filling procedures, paragraph 7-24.

5. Inspect Front Cover (1) on Second-stage for tightness and apply a single dot of torque sealant to Front Cover in one location.

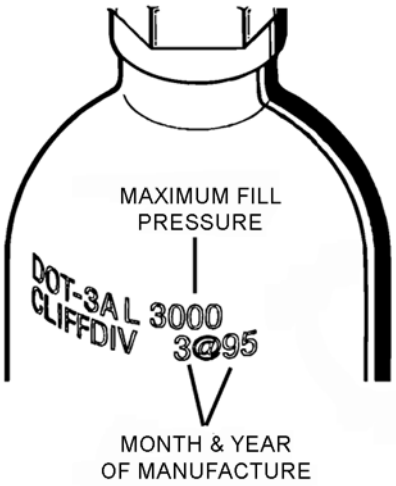

Figure 7-5. Cylinder Identification

6. Inspect Fill Port Plug (21) on First-stage for tightness (hand tight).

7. Inspect Mouthpiece (19) and Mouthpiece Cover (20) on Second-stage for deterioration, cracks and tears.

8. Visually inspect Exhaust Valve (17) on Second-stage for proper seating.

9. For History Card documentation utilized only the numeric portion of the serial number located between the "On/Off" Knob and Pressure Indicator (27) on the First-Stage assembly. Example: LJNH0064, use only 0064. (Figure 7-6)

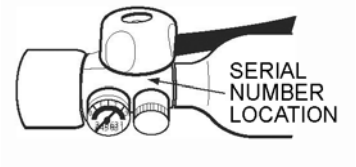

Figure 7-6. Serial Number Location

10. Perform final visual inspection of SEA and proper documentation of History Card. Ensure Pressure Indicator (27) reads in the "GREEN ZONE". SEA is now RFI.

7-21. 90-DAY INSPECTION. (Organizational Level) The 90-day inspection shall be conducted as follows: Refer to Figures 7-3 and 7-4 for parts and nomenclature identification.

NOTE

Reporting discrepancies assist NAVAIR Fleet Support Teams in correcting problems and maintaining quality products in the fleet. Report discrepancies in accordance with COMNAVAIRFORINST 4790.2, NAMDRP reporting, https://namdrp.navair.navy.mil.

1. Visually inspect exterior of SEA for cracks in plastic components, broken gauge, loose fittings, contamination, ease of operation of hose swivel fittings and worn serial numbers. A loose Fill Port Plug (21, Figure 7-3), Front Cover (1) and Exhaust Cover (18, Figure 7-4) can be hand tightened if found loose. If any other discrepancies are noted, turn SEA into I-Level for further inspection and repair.

2. Inspect Mouthpiece (19) and Mouthpiece Cover (20) for tightness, cracks, damage and contamination. Replace or clean as follows:

WARNING

Mouthpiece clamp shall be tightened using a Cable Tie tool to ensure that Clamp is tight.

a. Replacement.

(1) Cut Clamp (16, Figure 7-4) and remove mouthpiece.

(2) Install new mouthpiece so it is positioned in-line with hose. (Figure 7-7)

(3) Wrap new Clamp (16) around base of mouthpiece and position the locking buckle on the hose connection side to avoid interference when using. Using a cable tie tool tighten mouthpiece at a 7-8 setting. After tightening clamp, cut excess strap.

Figure 7-7. Mouthpiece Placement

(4) If Mouthpiece Cover (20) requires replacement install new mouthpiece cover in accordance with applicable survival vest or HESP configuration.

b. Cleaning.

(1) Mouthpiece (19) and Mouthpiece Cover (20) can be cleaned using a mild soap and water. Dry with a clean lint free cloth.

NOTE

Torque sealant must be visible. Do not use black.

3. Inspect for broken torque sealant on Front Cover (1). If torque sealant is broken or damaged clean off old torque sealant and replace. Place one single dot of torque sealant on Front Cover (1).

4. Check Pressure Indicator (27) to ensure SEA is pressurized to 3000 psi. If pressure is below the "GREEN ZONE", top-off cylinder in accordance with paragraph 7-24.

5. Perform "ON/OFF" Leak Test in accordance with paragraph 7-29.

6. If no leaks were detected, and Pressure Indicator (27, Figure 7-3) reads 3,000 psi (in the GREEN ZONE), turn the Handwheel (10) to the "Off" position, and depress Purge Cover (3, Figure 7-4) to release pressure on hose and Second-stage.

7. Perform final visual inspection of SEA and proper documentation of History Card. Ensure Pressure Indicator (27) reads in the "GREEN ZONE". SEA is now RFI. (Figure 7-11)

7-22. PREFLIGHT INSPECTION. The pre-flight inspection shall be performed on the SEA prior to each flight by the aircrewmember to whom the unit is assigned. Pre-flight procedures are as follows:

NOTE

Pre-flight and Post-flight inspections for the SEA LV2 2.0 HESP program will be included in this manual on a date TBD.

WARNING

Strict compliance of pre-flight and post-flight inspections shall be adhered to by all aircrewmembers utilizing the SEA. Any signs of discrepancies shall be reported immediately to maintenance personnel.

1. With the system off, visually inspect the SEA for signs of damage. Inspect front cover, exhaust cover and fittings for tightness. Inspect for tamper dot on Front cover. Inspect hose for cuts and blistering. Inspect for contamination, dirt and signs of corrosion.

CAUTION

Do not press the purge button when the SEA is on. Purging of the SEA will deplete the pressure below the "GREEN ZONE" and it will have to be topped off by maintenance personnel.

2. Turn the SEA "On" by rotating the on/off knob to the left, the red indicator ring shall not be seen through the elongated holes on the knob. Ensure that the gauge reads in the "GREEN ZONE", (Figure 7-11). If the gauge does not read in the "GREEN ZONE" report discrepancy to maintenance personnel.

7-23. POST FLIGHT INSPECTION.

1. Upon completion of flight, turn handwheel off so the red indicator ring is visible through the elongated holes on the handwheel. Depress the purge button to relieve pressure in hose and second-stage. Check SEA for signs of damage and contamination. Report discrepancies to maintenance personnel.

7-24. FILLING AND TOPPING-OFF THE SEA WITH THE MOBILE REFILL STATION (MRS III). (Intermediate and Organizational) Refer to Figure 7-8 during filling procedures. All maintenance, repair, filling and topping-off of the MRS-III is the responsibility of the "I" level activity with the exception of the following which can also be accomplished by "O" level.

1. Replacement of Fill Adapter (2) O-ring (P/N 100773, refer to MRS-III manual).

2. Adjustment of the Regulated Pressure Gauge (7), step 5.

WARNING

Do not use filling procedures printed on Top Plate of MRS-III system.

The MRS-III contains high-pressure air; serious injury or death may result if procedures identified below are not followed or there is misuse to the MRS-III and its contents. Care shall be taken when moving or transporting the MRS-III.

NOTE

The breathing air compressors that service the MRS-III are required to have semi-annual air sample quality testing. Ensure Air Sampling Procedures have been conducted in accordance with Chapter 6, of this manual.

Compressor relief valves are currently set to relieve at 3700 psi. Once all CQU-10/U's have been removed from service and replaced by the MRS-III an SEC will be released to increase that relief pressure to 4700 psi. This will give the MRS-III full operational capability. Organizational commands are not authorized to fill or top-off the MRS-III unit, they must send to "I" level for filling and maintenance.

Ensure that MRS III-is in an RFI condition, gauges have been calibrated and cylinders have been hydrostatically tested. Refer to maintenance documents and/or MRS-III manual, NAVAIR 19-1-270.

7-25. The MRS-III is a self-contained Mobile Refill Station with an on-board supply of breathing air up to 4500 psi. The MRS-III is designed to fill one or two (2) SEA or HABD units simultaneously to the operating pressure of 3000 psi. For HABD filling refer to Chapter 16 of this manual. The following instructions are the same for filling and topping-off one unit or two.

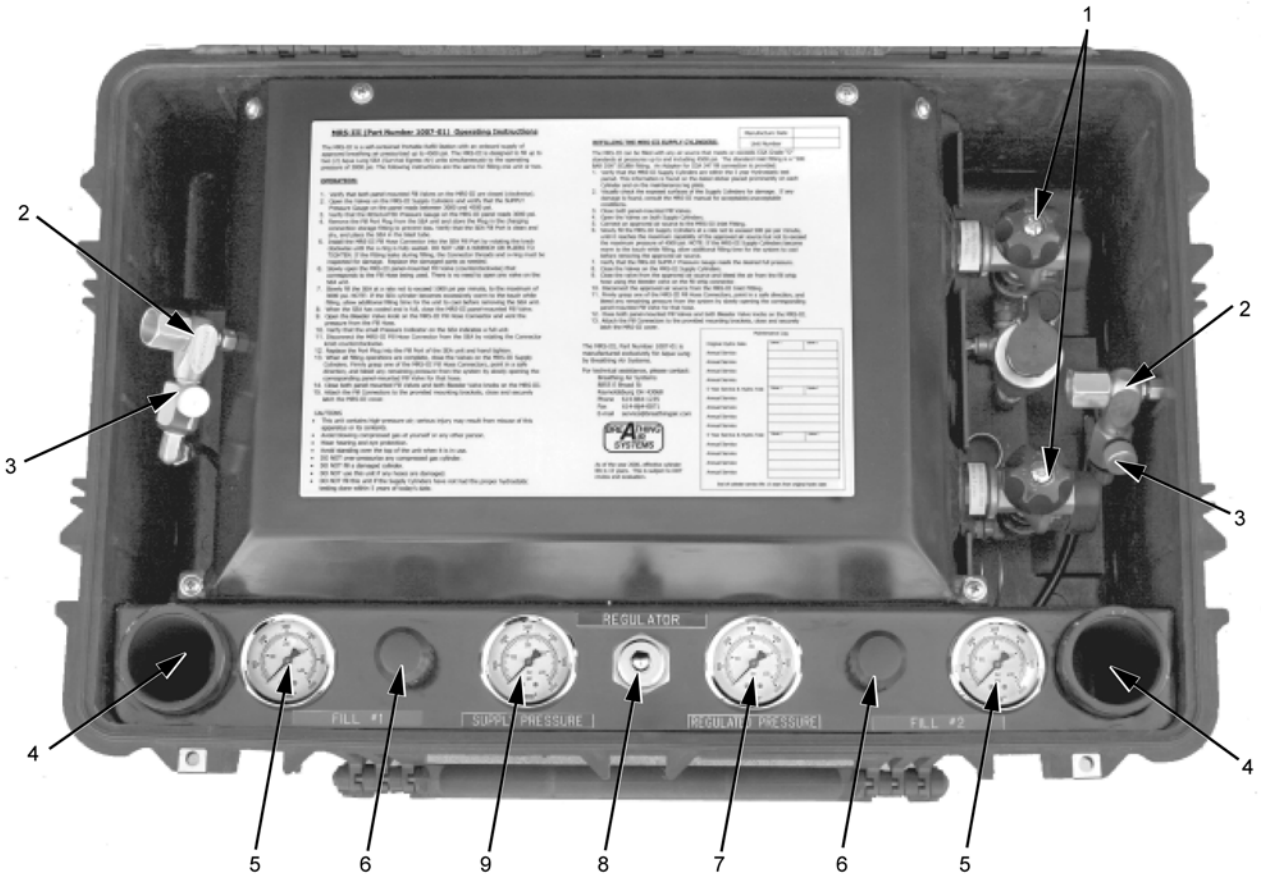

1. SUPPLY CYLINDER VALVES
2. FILL ADAPTER
3. BLEEDER VALVES
4. BOTTLE HOLDER
5. FILL GAUGE
6. FILL VALVE
7. REGULATED PRESSURE GAUGE
8. REGULATOR
9. SUPPLY PRESSURE GAUGE

Figure 7-8. Mobile Refill System (MRS-III)

63-9341A

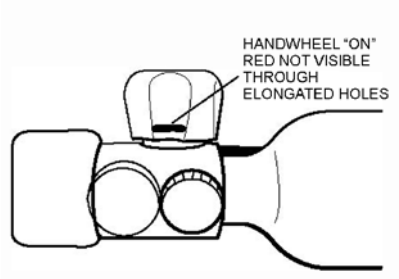

Figure 7-9. Handwheel "On" Position

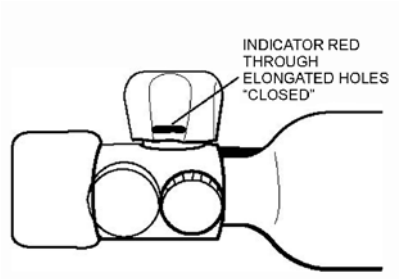

Figure 7-10. Handwheel "Off" Position

CAUTION

If the SEA is "On" take note that the hose and Second-stage will be pressurized.

1. On the MRS-III, remove Fill Adapter (2) from Adapter Mount. Remove both fill adapters if filling two SEA's simultaneously.

NOTE

Recommend storing the SEA Fill Port Plug (21, figure 7-3) in the MRS-III Adapter Mount to prevent loss of the plug during filling operations.

WARNING

If moisture is found to be present inside the Fill Adapter Port (23, figure 7-3) on SEA indicating that water may have entered the SEA first-stage and cylinder, DO NOT fill or attempt to use the SEA until the area has been dried using clean high pressure shop air. If moisture is suspected to have entered the system, perform a complete overhaul before filling.

2. Turn SEA "On", remove the Fill Port Plug (21, figure 7-3) from Fill Adapter Port (23, figure 7-3). Verify that the SEA Fill Adapter Port is clean and dry.

3. On the MRS-III, verify that both Fill Valves (6) are closed (clockwise).

4. On the MRS-III, slowly open both Supply Cylinder Valves (1) by pushing down on the knob while turning counterclockwise. Verify that the Supply Pressure Gauge (9) reads between 3000 and 4500 psi.

5. Verify that the Regulated Pressure Gauge (7) on the MRS-III panel reads 3000 +/-100 psi. If not within limits make adjustment as follows:

NOTE

For organizational level activities, MRS-III must have a minimum of 3300 psi to adjust Regulated Pressure Gauge (x). If not it must be sent to "I" level for top-off and adjustment.

a. Remove acorn nut on Regulator (8) using a 9/16-inch wrench.

b. Using a 3/16" Allen wrench slowly turn set screw clockwise or counterclockwise until the regulated pressure on Regulated Pressure Gauge (7) reads 3000 +/-100 psi.

c. While securely holding one Fill Adapter (2), cycle the corresponding Fill Valve (6) open and close one time.

d. Verify that the Regulated Pressure Gauge reads 3000 +/-100 psi. If not, repeat steps b and c until the pressure reads 3000 +/-100 psi.

e. Reinstall acorn nut and tighten utilizing a 9/16-inch wrench.

CAUTION

Do not use a wrench or pliers to tighten the MRS-III Fill Adapters (2) to the SEA. Hand-tighten only to seat the O-ring.

6. Visually inspect Fill Adapter (2) O-ring for signs of damage. If O-ring is damaged replace before attaching to SEA. Connect the MRS-III Fill Adapter (2) to the SEA Fill Adapter Port (23, figure 7-3) by rotating the hex knob clockwise until the O-ring is fully seated. Place SEA in Bottle Holder (4). Repeat process for filling two cylinders.

CAUTION

Rapid filling of the cylinder will generate heat and may result in an incomplete fill after it cools. Fill at a rate of 500 psi per minute to a maximum of 3000 psi. If the cylinder becomes excessively warm to the touch while filling, allow unit to cool before continuing to fill. Unit shall be cool before removing from bottle holder. A warm cylinder can give an incorrect reading.

7. Slowly open the MRS-III Fill Valve (6) that corresponds to the Fill Adapter (2) being used. Slowly open both Fill Valves (2) on the MRS-III if you are filling two SEA units. Monitor filling of the SEA pressure by observing the Fill Pressure Gauge (5) that corresponds to the SEA being filled.

8. When filling is complete and the cylinder is completely cooled, close the MRS-III Fill Valve (6).

9. Verify cylinder pressure. SEA pressure gauge shall read in the GREEN ZONE, indicating 3000 psi. (Figure 7-11)

10. Open the Bleeder Valve (3) on the corresponding MRS-III Fill Adapter (2) and vent the excess pressure.

11. Disconnect the MRS-III Fill Adapter (2) from the SEA unit by turning the hex knob counterclockwise.

12. Inspect O-ring (22, figure 7-3) on SEA Fill Port Plug (21, figure 7-3) for signs of damage, replace as necessary. Lubricate O-ring with Christo-Lube. Replace the Fill Port Plug (21, figure 7-3) onto the SEA Fill Port Adapter (23, figure 7-3) and hand tighten.

13. Continue with inspection of SEA.

CAUTION

Use a firm grip on Fill Adapters when bleeding off pressure from the MRS-III.

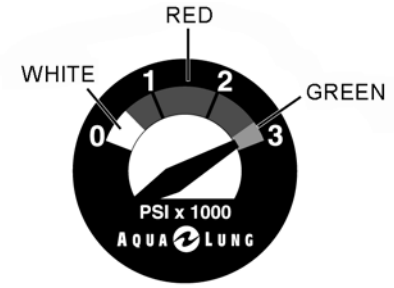

Figure 7-11. Pressure Gauge

14. When all filling and topping-off operations are complete for the day, close the Supply Cylinder Valves (1) on the MRS-III. Firmly grasp one of the Fill Adapter (2) and point in a safe direction, bleed any remaining pressure from the system by slowly opening the corresponding Fill Valve (6) for that hose. Ensure all gauges on the MRS-III indicate no pressure.

15. Close both Bleeder Valve (3) and Fill Valves (6) on the MRS-III.

16. Attach the Fill Adapters (2) to the Adapter Mount(s), close and latch the MRS-III case.

7-26. PURGING. Purging of the SEA shall be completed after the SEA has been overhauled or if the First-stage regulator has been removed for repair. Purge the unit as follows:

NOTE

Always purge the SEA slowly to avoid build up of moisture inside.

1. Follow filling procedures as outlined in paragraph 7-24. Fill SEA to 1,000 psi and depress Second-stage to release pressure. Purge the unit a minimum of two times before filling.

7-27. STATIC LEAK TEST (INTERMEDIATE LEVEL ONLY). The Static Leak Test shall be performed during the 760-day inspection and after any repairs have been performed.

1. Turn the SEA On; Pressure Gauge (27) shall indicate 3000 psi (GREEN ZONE).

2. Listen for any audible leakage or free flow from Second-stage. If no audible leakage is detected continue with test. If there is any audible leakage or free flow, repair of the discrepant component or a complete overhaul must be performed.

3. Set the SEA aside and let sit for a period of 8 hours or overnight.

4. At the end of the 8 hours check pressure gauge for indicated pressure. If the pressure has remained the same, turn handwheel to the "Off" position and depressurize the hose by using the Purge Button (3). SEA is now ready for issue. If the Pressure gauge has fallen below 3000 psi (GREEN ZONE), perform the Immersion Leak Test, paragraph 7-28 to determine location of leakage.

7-28. IMMERSION/LEAK TEST (INTERMEDIATE LEVEL ONLY). The Immersion Leak Test shall be performed when the Static Leak Test has failed.

CAUTION

Do not submerge unit without pressure on the entire system. Moisture may enter the valves and the cylinder, which will require the system to be disassembled and purged.

1. Ensure system is pressurized. Gauge shall indicate 3000 psi (GREEN ZONE). Listen for any audible signs of leakage including free flow from Second-stage.

2. Remove rubber Cap Protector (29) and Fill Port Plug (21). Immerse the SEA in water and check all components for signs of leakage. If leakage is found refer to Trouble Shooting Charts, Table 7-1 and 7-2 for repair.

CAUTION

Do not blow air into Second-stage assembly.

3. If no leakage is detected, shake excess water off SEA. Using a clean air source blow air into holes on Piston Cap (30) and Fill Port Adapter (23) to remove water.

4. If no leakage is detected, however, system continues to loose pressure, the discrepant component shall be repaired or the SEA will need to be overhauled.

7-29. ON/OFF LEAK TEST (ORGANIZATIONAL LEVEL ONLY). The On/Off Leak Test shall be performed during the 90-day inspection.

1. Turn the SEA On; Pressure Gauge (27) shall indicate 3000 psi. If required, top off SEA in accordance with paragraph 7-24.

2. Depress and release the Second-stage Purge Button (3). An audible hiss should be heard which should stop immediately once the button is released. If the audible hiss does not stop depress the Purge button 2-3 more times. If the audible hiss stops continue with test. If it does not stop or if no audible hiss is heard when the Purge button is depressed, turn unit off, depressurize hose and forward the unit to Intermediate Level maintenance for repair.

3. Turn the SEA handwheel (10) to the "Off" position and depressurize the hose using the Purge Button (3).

4. Allow the SEA to sit for 15 minutes then press the Purge button again. Any air escaping indicates a leaking "On/Off" valve. Forward to Intermediate Level maintenance for repair.

5. If no leakage is detected continue with 90-day inspection.

Table 7-1. SEA LV-2 First-Stage Assembly

Symptom	Possible Cause	Treatment
System will not remain depressurized after valve is shut and second-stage is purged.	1. Valve Seat (20) damaged or worn. 2. Valve seating surface damaged.	1. Replace Valve Seat. 2. Replace Body (36).
High or intermediate pressure.	1. Valve Seat (20) damaged or worn. 2. Valve seating surface damaged. 3. Main Spring (35) defective. 4. HP Seat (34) damaged or worn. 5. HP crown sealing surface damaged.	1. Replace Valve Seat. 2. Replace Body (36). 3. Replace Main Spring 4. Replace HP Seat. 5. Replace Body (36).
Low intermediate pressure.	1. Main Spring (35) weakened or damaged.	1. Replace Main Spring.
External air leakage (Immersion Test)	1. Piston Head O-ring (31) or Shaft O-ring (33) damaged or worn. 2. O-ring Groove(s) on Piston (32) damaged or worn. 3. Piston head O-ring sealing surface in Piston Cap (30) damaged. 4. Piston Shaft O-ring sealing surface in body damaged.	1. Replace O-ring(s). 2. Replace Piston. 3. Replace Piston cap. 4. Replace Body (36).

Table 7-2. SEA LV-2 Second-Stage Assembly

Symptom	Possible Cause	Treatment
Leakage or freeflow from Second-stage.	1. High First-stage intermediate pressure. (should be 135 ±20 psi).	1. Refer to First-stage Troubleshooting Guide.
	2. LP Seat (12) damaged or worn.	2. Replace LP Seat.
	3. Lever (7) set too high.	3. Readjust Locknut.
	4. Lever (7) damaged.	4. Disassemble Second-stage and replace Lever.
	5. Crown (13) sealing surface damaged or worn.	5. Replace Inlet Fitting.
	6. Poppet (11) damaged or worn.	6. Replace Poppet and LP Seat.
	7. Poppet Spring (10) damaged.	7. Replace Poppet Spring.
Low purge or excessive work of breathing (full cylinder).	1. Low intermediate pressure. (should be 135 ±20 psi).	1. Refer to First-stage Troubleshooting Guide.
	2. Lever (7) set too low.	2. Readjust locknut.
	3. Lever (7) bent.	3. Disassemble Second-stage and replace lever.
	4. Poppet Spring incorrectly installed.	4. Disassemble Second-stage and reinstall Poppet Spring.
	5. Intermediate Pressure Hose clogged or obstructed.	5. Clean or replace Hose.
External air leakage (Immersion Test).	1. Intermediate Pressure Hose loose.	1. Tighten to 45 ±3 inch-lbs. at second stage fitting.
	2. IP hose O-ring damaged.	2. Disassemble and replace O-ring.
Water entering Second-stage.	1. Hole in Mouthpiece.	1. Replace Mouthpiece.
	2. Demand Diaphragm (4) damaged.	2. Replace Demand Diaphragm.
	3. Exhaust Diaphragm (17) damaged.	3. Replace Exhaust Diaphragm.
	4. Diaphragm imprroperly seated.	4. Disassemble and properly reassemble. (Check for distortion).
	5. Box bottom damaged. (Check Exhaust Valve sealing surface).	5. Replace Box bottom.
	6. Valve Body O-ring (14) damaged.	6. Disassemble and replace O-ring.

7-30. 720-DAY INSPECTION. Only qualified Aircrew Survival Equipmentman at I-Level maintenance activities shall perform the 720-day inspection on the SEA.

7-31. DISASSEMBLY.

WARNING

Do not attempt to reuse mandatory replacement parts unless otherwise instructed. Mandatory replacement parts are those in the Service Kits, P/N 108343 and P/N 108344. Refer to Figures 7-3, 7-4 and IPB as needed.

NOTE

Place disassembled parts on a clean working surface. Keeping parts in order of disassembly will facilitate the reassembly.

7-32. FIRST-STAGE REGULATOR DISASSEMBLY. Refer to Figure 7-3 for identification of parts.

1. Completely open the "On/Off" Handwheel (10). Purge all air from the cylinder by depressing the Purge Cover (3).

2. While holding the Second-stage Inlet Fitting (13) with a thin 3/4-inch open-end wrench (not wider than the nut), use an 11/16-inch open-end wrench to unscrew the hose from the Second-stage.

3. Using the O-ring tool (P/N 10-102-400), remove O-ring (39) located inside the Second-stage hose-end fitting.

4. Using a 3/16-inch hex key socket wrench, unscrew the Swivel Fitting (1) from the First-stage body. Separate the Hose (4) and Spacer (5) from the fitting. Remove O-rings (2) and (3) from the Swivel Fitting.

5. Unscrew the Burst Plug (6) from the First-stage using a 3/8-inch socket.

6. Unscrew the Retaining Nut (7) using the notched straight slot screwdriver. Remove the Washer (8), Spring (9), Handwheel (10), Washer (11) and "On/Off" Indicator Ring (12) from the stem.

7. Using a 3/4 inch open-end wrench unscrew the Bonnet (13) from the First-stage body and remove O-ring (14). Push the Valve Stem (19) out of the Bonnet (13). Remove the Backup Ring (15), O-ring (16), Spacer (17) and Washer (18) from the Stem. (It is possible that some or all of these parts will be stuck in the Bonnet).

NOTE

If the Valve Seat (20) does not fall out of the First-stage body, insert the squared end of the Stem (19) into the Valve Seat (20) and unscrew it from the First-stage body.

8. Remove Valve Seat (20) from the First-stage body (36). Using a magnifier, inspect the condition of the crown. There should be no scratches, nicks or dents on the crown sealing surface.

9. Remove Dial Gauge (27) using a 7/8-inch open-end wrench. Remove O-ring (28).

10. Using your fingers, unscrew the Fill Port Plug (21) from the end of the Fill Adapter Port (23). Remove the O-ring (22) from the Fill Port Plug.

11. Using a 9/16-inch box-end wrench, unscrew the Fill Adaptor Port (23) from the First-stage body. Remove O-ring (24).

12. Remove the Check Valve (26). Remove O-ring (25) from Check Valve.

13. Using your fingers, twist and pull the Cap Protector (29) off the First-stage. Be careful not to damage the Cap Protector.

14. Insert the pins of an adjustable spanner wrench into the two corresponding holes in the top of the Piston Cap (30). Unscrew the Piston Cap from the First-stage body. Separate the Piston (32) from the Piston Cap. Inspect the inside surface of the cap for corrosion or scratches. Remove O-ring (31) and (33) from Piston. Remove the Spring (35) from the First-stage.

15. Insert the pin of the seat extractor tool (P/N 109437) down the bore of the Piston (32) and press out the High-Pressure (HP) Seat (34).

16. Place cylinder into bottle vise-clamp and secure. Using a 1 3/16-inch crows-foot and flex handle drive, remove first-stage assembly from cylinder. Remove O-ring (37).

CAUTION

If corrosion, oil or other harmful foreign matter is found that cannot be removed, the cylinder must be replaced.

17. Perform a visual inspection of the cylinder. Check for debris, corrosion, moisture or other foreign matter. If cylinder is contaminated rinse cylinder in fresh water and dry completely before reassembly.

7-33. SECOND-STAGE DISASSEMBLY. Refer to Figure 7-4 for identification of parts.

1. Using small wire cutters carefully snip the plastic Mouthpiece Clamp (16) and remove Mouthpiece (19) from Box Bottom (15). Inspect Mouthpiece for cleanliness and signs of damage. Clean with mild soap and warm water. Discard and replace if damaged.

2. Using your fingers, unscrew the Front Cover (1) from the Box Bottom (15). Using the Retaining Ring Removal Tool (P/N 100188), unscrew the Retaining Ring (2).

3. Lift out the Purge Cover (3) and Diaphragm (4). Inspect Diaphragm for holes and tears by holding up to a light source and gently stretching around the perimeter.

4. While depressing the Lever (7), unscrew the Inlet Fitting (13) using a 3/4-inch wrench. Remove O-ring (14).

NOTE

Valve assembly parts are under spring pressure. When removing the Locknut (5), be sure to keep the poppet side of the valve against a work surface to prevent loss of parts.

5. Gently grasp the Lever (7) and remove the entire Valve assembly. It may be necessary to push in on the Valve assembly through the inlet hole.

6. Using your fingers, unscrew the Exhaust Cover (18). Remove Exhaust Valve (17).

7. Hold the Valve Body (8), poppet side facing down, firmly against the work surface. Using a 1/4-inch nutdriver, remove the Locknut (5). Separate the Locknut (5), Washer (6), Lever (7), Poppet (11), and Spring (10) from the Valve Body (8). Using the threaded end of the Poppet (11), press the Poppet Bearing (9) out of the Valve Body.

8. With the O-ring removal tool pierce the center of the Low-Pressure (LP) Seat (12) and remove it from the Poppet (11). DO NOT discard the seat, as it will be used later to aid in reassembly.

7-34. CLEANING AND LUBRICATION. Prior to reassembly inspect, clean and lubricate components of the SEA as follows:

NOTE

Isolate delicate parts, such as orifice cones, to prevent damage.

1. **For plastic, brass, stainless steel and rubber parts:** Using a mixture of warm water and mild detergent gently hand agitate components in solution. Use a soft nylon brush, such as a soft toothbrush, to scrub away any deposits. Rinse in clear fresh water and blow dry, using low-pressure air.

2. **Hoses**: If any corrosion is noted, replace hose. Rinse hose end fittings in fresh water and allow drying with the cleaned ends hanging down. Avoid getting water in hose. Blow low-pressure air through the hose and hose fittings to ensure hose is completely dry before attaching to regulator.

CAUTION

DO NOT apply Christo-Lube to the threads of the Burst Plug (6).

3. **Lubrication**: All O-rings and threads shall be lubricated only with Christo-Lube, which meets requirements for extreme weather conditions. Lubricate with a visible film of Christo-Lube, but avoid applying excessive amounts, as this will attract particulate matter that may cause damage to the O-rings.

7-35. FIRST-STAGE REASSEMBLY. Refer to Figure 7-3 when reassembling First-stage. Utilizing First-Stage Service Kit (P/N 108343), perform the reassembly as follows:

NOTE

Lubricate all O-rings before installing.

1. Install a new O-ring (37) (P/N 820316) over the First-stage cylinder threads so that it is seated against the First-stage body.

2. Lubricate the first 4 to 5 threads on the First-stage body with Christo-Lube.

3. Thread the First-stage into the cylinder until hand tight. Place the cylinder into the bottle vice clamp. Utilizing a 1 3/16-inch crows foot on a torque wrench tighten the First-stage to a torque value of 25 +/-2 foot-pounds.

4. Install a new O-ring (33) (P/N 820007) onto the piston shaft and a new O-ring (31) (P/N 820062) onto the piston head. (Figure 7-12)

Figure 7-12. Piston O-ring Placement

5. Closely examine the new HP Seat (34) (P/N 106726). One edge is sharp and one edge has a beveled, more rounded edge. With the beveled edge facing outward, press the HP seat into the small recessed hole in the end of the piston.

6. Place the Spring (35) into the body.

7. Press the Piston (32) into the Piston Cap (30) so that the piston head is seated flat against the Piston cap. Pass the piston shaft through the spring. (Figure 7-13)

8. While pressing down on the piston cap, hand tighten the piston cap onto the First-stage by turning clockwise. Tighten the cap with an adjustable spanner wrench until the cap stops against the First-stage body. Install Cap Protector (29).

Figure 7-13. Placing Piston onto First-Stage Body

9. Install a new O-ring (25) (P/N 820304) onto the shaft of the Check Valve (26).

10. Install a new O-ring (24) (P/N 820319) onto the Fill Adapter Port (23).

11. Insert the Check Valve (26), O-ring side first, into the male-threaded end of the Fill Adapter Port (23).

12. Thread the Fill Adapter Port (23) into the lower of the two High-Pressure (HP) ports on the First-stage Body (36). It will only fit in the bottom port.

13. Attach a 9/16 inch socket to a torque wrench and tighten the Fill Adapter Port (23) to 90 +/-3 inch-pounds. Do not over torque. This will cause damage to the Fill Adapter Port.

14. Install a new O-ring (22) (P/N 820319) onto the Fill Port Plug (21). Thread the Fill Port Plug (21) into the Fill Adapter Port (23) until finger tight.

15. Install a new O-ring (28) (P/N 820319) onto the Dial Pressure Indicator (27).

16. Thread the pressure indicator into the upper HP port and tighten using a 7/8-inch crows-foot on torque wrench. Torque to 45 +/-5 inch pounds.

NOTE

Burst Plug (6) is chrome in color. This is the only external part on the SEA that is chrome. DO NOT put Christo-Lube on threads of Burst Plug.

17. Thread a new Burst Plug Assembly (6) (P/N 054201) into the lower port on the First-stage body (the port opposite of the Fill Adapter Port). Attach a 3/8-inch socket to a torque wrench and tighten the Burst Plug to 90 +/-10 inch pounds.

18. Install 2 new O-rings (2) (P/N 820312) into the grooves located on either side of the center hole of the Swivel Adapter (1). Install a new O-ring (3) (P/N 820311) on the threaded end of the Swivel Adapter. (Figure 7-14)

Figure 7-14. Swivel Adapter O-ring Placement

19. Pass the threaded end of the Swivel Adapter (1) through the hose swivel end. Make sure that both O-rings (P/N 820312) are covered by the hose swivel end. Be careful not to damage the O-rings. Slightly rotating the hose swivel end while pressing on the Swivel Adapter will ease assembly.

20. Pass the Spacer (5) over the threaded end of the Swivel Adapter (1) and against the hose swivel end. (Figure 7-15)

Figure 7-15. Spacer Placement

21. Thread the Swivel Adapter (1) into the First-Stage Body (36). Attach a 3/16-inch hex key socket to a torque wrench and tighten the Swivel Adapter to 60 +/-3 inch pounds.

22. Install a new Washer (18) (P/N 108327) onto the Stem (19).

23. Install the Spacer (17) against the washer.

24. Install a new O-ring (16) (P/N 820010) against the spacer.

25. Examine a new Backup Ring (15) (P/N 828009) to determine which side is flat and which side is concave. Install Backup Ring (15) with its concave side against the O-ring (16). (Figure 7-16)

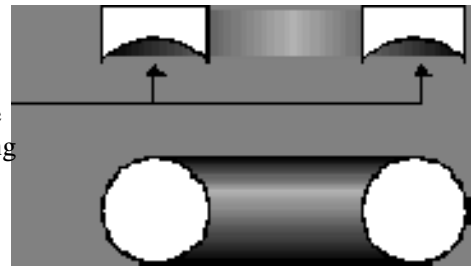

Figure 7-16. Backup O-ring Placement

26. Using the squared end of the Stem (19), screw a new Valve Seat (20) (P/N 108322) into the First-Stage Body (36) until finger tight. Leave the Stem (19) in the Valve Seat (20). (Figure 7-17)

Figure 7-17. Valve Seat Adjustment

CAUTION

Failure to tighten the Valve Seat will cause damage to the bonnet when installed and torqued.

27. Using the Handwheel (10) as a wrench place the handwheel over the Stem (19) and tighten the Valve Seat (20) until snug. Remove the handwheel.

28. Install a new O-ring (14) (P/N 820015) onto the Bonnet (13) so that the O-ring fits into the groove located above the larger threads.

29. Pass the Bonnet (13) over the Stem (19) and thread it into the First-Stage Body (36).

30. Attach a 3/4-inch medium deep-well socket to a torque wrench and tighten the Bonnet (13) to 90 +/-3 inch-pounds.

31. Place the larger Washer (11) over the Stem (19) against the Bonnet (13).

CAUTION

The following step is critical to ensure the Handwheel (10) is aligned properly with the shaft.

32. With the rounded edge of the Indicator Ring (12) facing outward, thread the indicator ring onto the bonnet. When the indicator ring bottoms out, turn it counterclockwise so the shaft corners of the Stem (19) point to the square cutouts in the indicator ring. Then turn an additional 90 degrees counterclockwise. (Figure 7-18)

33. Place Handwheel (10) over the Indicator Ring (12).

34. Insert the Spring (9) into the Handwheel (10) placing it over the Stem (19).

35. Place the small Washer (8) over the top of the Spring (9).

Figure 7-18. Indicator Ring Placement

36. While holding the Handwheel (10) use a notched straight slot screwdriver and screw the Retaining Nut (7) onto the end of the Stem (19) until the retaining nut will not turn any further. (Figure 7-19)

Figure 7-19. Retaining Nut Attachment

37. Install a new O-ring (39) (P/N 820010, located in Second-stage servicing kit) into the end fitting of the hose.

7-36. FIRST-STAGE TESTING. Perform the First-stage testing as follows:

NOTE

SEA must maintain 3,000 psi during testing. SEA may require topping-off during the testing phase.

1. Cycle Handwheel (10) "On/Off" several times; check Indicator Ring function. Ensure the red indictor Ring is visible through the elongated holes in the handwheel when in the "Off" position. Turn handwheel until valve is closed.

2. Prepare MRS-III for filling. Remove Fill Port Plug (21) from SEA. Attach IP test gauge to Second-stage hose end and hand tighten. Ensure IP gauge bleeder valve is closed. With Handwheel closed slowly fill SEA to 3,000 psi.

WARNING

If IP pressure exceeds 155 psi when Handwheel is opened, immediately turn off Handwheel and open bleed valve on pressure gauge. SEA must be overhauled to correct deficiency.

NOTE

There is no adjustment to the First-stage to correct improper IP pressure. After cycling the bleed valve and the IP pressure is not within range the SEA will have to be overhauled.

3. Turn Handwheel (10) slowly to open valve. Cycle gauge bleeder valve a minimum of 4 times. Be sure to maintain 3,000 psi during testing. Check IP pressure, pressure shall be 135 +/-20 psi.

4. Turn Handwheel (10) clockwise to close valve. Open IP gauge bleeder valve to relieve pressure. Close corresponding Fill Valve on MRS-III and open bleed valve to relieve pressure from lines. Disconnect IP pressure gauge. Do not relieve pressure from SEA. Set SEA off to side while assembling Second-stage.

7-37. SECOND-STAGE REASSEMBLY. Refer to Figure 7-4 when reassembling Second-stage. Utilizing Second-Stage Service Kit (P/N 108344), perform the reassembly as follows:

NOTE

Lubricate all O-rings before installation.

1. Install a new Exhaust Valve (17) (P/N 100122) by inserting the stem of the exhaust valve through the center hole of the corresponding exhaust port. Pull stem through until mushroom plug pops through the hole and keeps valve securely in place. Ensure exhaust valve is lying flat and is not distorted or folded under.

2. Using a pair of small wire cutters, snip the stem of the Exhaust Valve (17) so it is only about a 1/4 inch long.

3. Using your fingers, screw the Exhaust Cover (18) onto the Box Bottom (15) until finger tight.

4. Press a new LP Seat (12) (P/N 106738) into the end of the Poppet (11) until it is flush and seated evenly. Ensure the dimpled side is toward the poppet.

5. Place a new Poppet Bearing (9) (P/N 104134), rounded side first, onto the stem of the Poppet (11). (Figure 7-20)

Figure 7-20. Popper Bearing Placement

6. Using the Poppet (11) as an installation tool, insert the Poppet Bearing (9) into the bottom of the Valve Body (8). Align the squared side of the poppet bearing with the square hole in the valve body and press it into place. Remove the poppet carefully. If poppet bearing does not stay in the body, use a small amount of Christo-Lube around the square end to hold it in place.

7. Install a new O-ring (14) (P/N 820015) in the groove located between the wrench flats and threads on the Inlet Fitting (13).

NOTE

The used LP seat is only used to aid in reassembly. It will be removed and discarded later in the reassembly procedure.

8. Take the **used** LP Seat (12) that was removed during disassembly and place it on top of the crown sealing surface inside the Inlet Fitting (13). (Figure 7-21)

9. Place the Spring (10) over the stem of the Poppet (11) and set this assembly into the Inlet Fitting (13), on top of the **used** LP seat.

Figure 7-21. Used LP Seat Placement

10. Place the barrel of the Valve Body (8) over the top of the Poppet (11). While pressing down on the Valve Body (8) (exposing threads of the poppet) screw the Valve Body (8) onto the Inlet Fitting (13). Ensure the square sides of the Poppet (11) line up in the square hole of the Poppet Bearing (9) before tightening. (Figure 7-22)

Figure 7-22. Poppet to Valve Body Placement

11. Place the "feet" of the Lever (7) into the groove on the face of the Valve Body (8) so that the Lever is pointing up and away from the air outlet hole. (Figure 7-23)

12. Place the Washer (6) over the threads of the Poppet Stem (11), then thread a new Locknut (5) (P/N 102510) onto the Poppet Stem.

Figure 7-23. Lever "Feet" Placement

CAUTION

Ensure there are **TWO** full threads showing after tightening the Locknut. This is a vital adjustment for the Second-stage assembly.

13. Using a 1/4-inch nut driver, tighten the Locknut (5) until **TWO** full threads show past the locknut. (Figure 7-24)

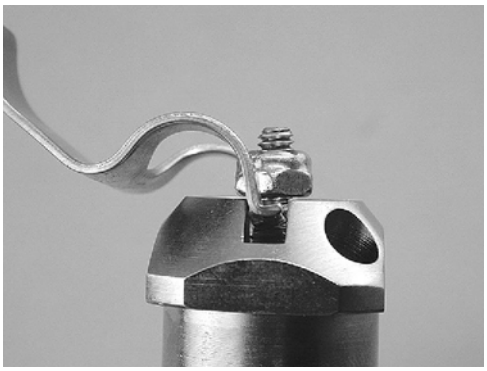

Figure 7-24. Locknut Adjustment

14. Unscrew the Inlet Fitting (13) from the Valve Body (8). Discard the used LP seat. Ensure the new LP Seat (12) stays in the poppet.

CAUTION

Depressing Lever (7) is required to avoid damage to the new LP Seat (12).

15. While depressing the Lever (7) with your finger, thread the Inlet Fitting (13) back into the Valve Body (8) for adjusting. (Figure 7-25)

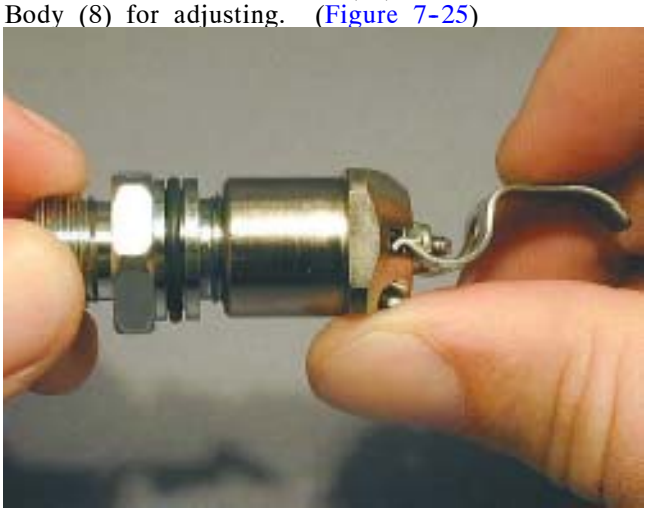

Figure 7-25. Installing Inlet Fitting

CAUTION

SEA is under pressure, use caution when performing the following procedures.

NOTE

The following steps are the final Second-stage adjustment, ensure to follow them completely.

16. Attach the Valve Assembly to the end of the hose until finger tight. Slowly turn the Hand wheel (10) counterclockwise to open the valve. If a leak is detected while opening the valve, immediately close the handwheel. Loosen the Locknut (5) 1/2 turn and slowly open the valve again. Repeat this step until the valve assembly does not leak.

17. Using a 1/4-inch nut driver, tighten the Locknut until air starts to leak. As soon as a leak is detected, loosen the locknut until the leak completely stops, then loosen an additional 1/4 turn.

CAUTION

Depressing Lever (7) is required to avoid damage to the new LP Seat (12).

18. Close the Handwheel (10). Purge the air from the hose and Valve assembly by pressing down on the Lever (7). Remove the Valve Assembly from the hose. While depressing the Lever (7) with your finger, unscrew the Inlet Fitting (13) from the valve body.

19. With the Lever (7) facing upward, insert the Valve Body (8) into the Box Bottom (15). Make sure the flat sides of the Valve Body (8) are within the plastic slot. This will prevent the valve body from rotating when installing the Inlet Fitting (13). (Figure 7-26)

Figure 7-26. Insert Valve Body

CAUTION

Depressing Lever (7) is required to avoid damage to the new LP Seat (12).

20. While depressing the Lever (7) with your finger, thread the Inlet Fitting (13) into the Valve Body (8). It may be necessary to push inward on the Valve body to seat it.

21. Attach a 3/4 inch crows-foot or 3/4 inch socket to a torque wrench and tighten the Inlet Fitting (13) to 50 +/-5 inch-pounds.

22. Place the Diaphragm (4) over the Lever (7); making sure the perimeter of the diaphragm is seated below the threads and against the Box Bottom (15).

23. If necessary lubricate the sides and lips of the Purge Cover (3) with a soapy solution (4 parts water to 1 part soap) to ease the placement of the Retaining Ring (2).

24. Place the Purge Cover (3) directly over the diaphragm so the oblong vent holes located on the purge cover are parallel to the valve body.

WARNING

Movement of Purge Cover may cause the Diaphragm to unseat and become damaged causing a malfunction of the Second-stage regulator. Ensure purge cover does not move during the installation of the retaining ring.

25. Place the Retaining Ring (2) over the Purge Cover (3), slotted side facing up. While pressing down on the purge cover with thumb to hold it in place, apply one pin of the retaining ring wrench to a slot in the retaining ring. Turn the retaining ring clockwise until it is snug. Apply both pins of the wrench to the retaining ring, while continuing to hold the purge cover with thumb. Tighten retaining ring until snug.

26. Screw the Front Cover (1) onto the Box Bottom (15) until finger tight.

27. Ensure Mouthpiece has been cleaned. Install the Mouthpiece (19) onto the Box Bottom (15). Mouthpiece shall be positioned in-line with valve body. Loosely fasten a new Clamp (16) (P/N 104913) or (P/N TY-524MX, NIIN 01-167-5991) over the slots at the base of the mouthpiece. Orient the clamp buckle on the hose side of the mouthpiece. Pull the clamp tight using a Cable Tie tool at a 7-8 setting and snip the excess strap flush with the buckle using a small pair of wire cutters. (Figure 7-7)

28. Thread the hose onto the Inlet Fitting (13). Attach an 11/16 inch crows-foot to a torque wrench. While holding the inlet fitting with a thin 3/4 inch wrench, tighten the hose to 45 +/- 3 inch-pounds.

7-38. FINAL TESTING.

1. If necessary top-off SEA to 3,000 psi.

2. Perform Static Leak Test in accordance with paragraph 7-27.

NOTE

Ensure old torque sealant is removed and item cleaned before applying new torque sealant.

3. Ensure Front Cover (1), Exhaust Cover (18) and Fill Port Plug (21) are hand tight. Pressure Gauge (27) reads in the "GREEN ZONE". Place one single dot of torque sealant on Front Cover (1). SEA is now ready for service.

4. Install mouthpiece cover (if available) over mouthpiece (Figure 7-27). For mouthpiece cover attachment to survival vest refer to appropriate NAVAIR 13 series manual.

5. Record inspection data on appropriate forms in accordance with COMNAVAIRFORINST 4790 series.

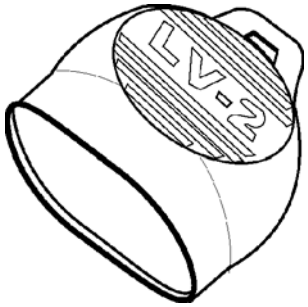

Figure 7-27. SEA Mouthpiece Cover

Section 7-4. Illustrated Parts Breakdown

7-39. GENERAL.

7-40. This section lists and illustrates the assemblies and individual parts of the Survival Egress Air, (SEA/LV2 1.5 P/N 108445) and (SEA/LV2 2.0 P/N TBD).

7-41. The Illustrated Parts Breakdown (IPB) shall be used only when requisitioning parts or Servicing Kits for the SEA.

Figure 7-28. SEA LV2 1.5
(For Navy and Marine Corp Aircrew)

Figure 7-29. SEA LV2 2.0
(For Marine Troop Passengers Only)
(TBD)

Figure and Index Number	Part Number	Description 1 2 3 4 5 6 7	Units Per Assembly	Usable On Code
7-28	1586AS400-1	SURVIVAL EGRESS AIR (LV2/1.5)		
	108445	SRU-42/P (94120)	REF	A
7-29	TBD	SURVIVAL EGRESS AIR (LV2/2.0)		
	TBD	SRU-43/P (94120)	REF	B

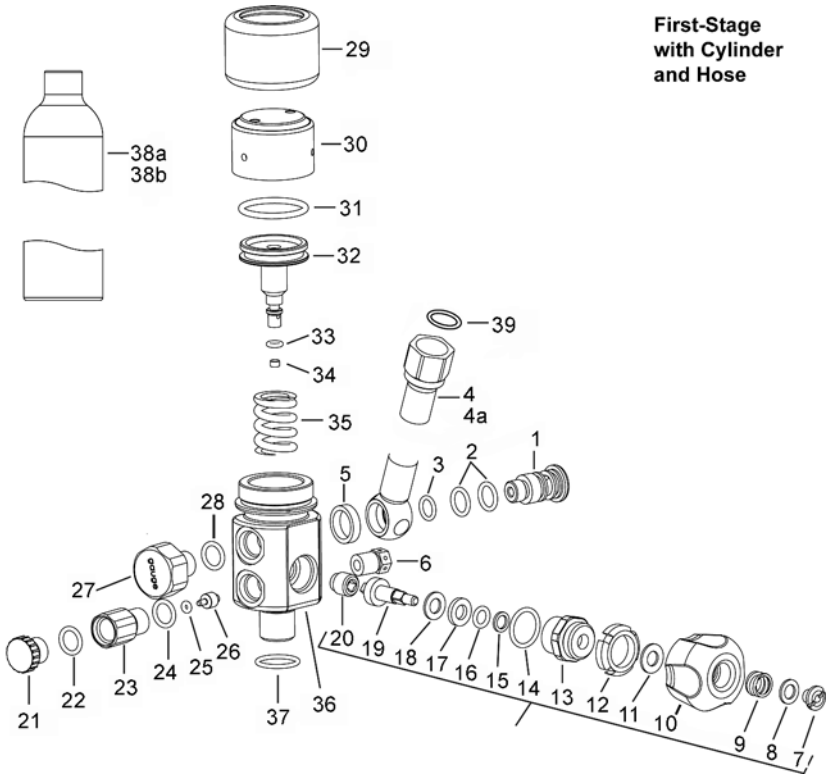

Figure 7-30. First-Stage Regulator with Cylinder and Hose

Figure and Index Number	Part Number	Description 1 2 3 4 5 6 7	Units Per Assembly	Usable On Code
7-30	108425	FIRST-STAGE ASSEMBLY (94120) (Note 1)	1	A, B
-1	108305	. Swivel Adapter (94120) (Note 4)	1	
-2	820312	. O-Ring (94120) (Note 2, 3)	1	
-3	820311	. O-Ring (94120) (Note 2)	1	
-4	108391	Hose Assembly, 20” Black (94120) (Note 4)	1	A
-4a	TBD	Hose Assembly, TBD Black (94120) (Note 4)	1	B
-5	108306	. Swival Spacer (94120) (Note 4)	1	
-6	054201	. Burst Plug, Chrome (94120) (Note 2)	1	
-7	108304	. Retaining Nut (94120) (Note 4)	1	
-8	108329	. Washer, Handwheel (94120) (Note 4)	1	
-9	108316	. Spring, Handwheel (94120) (Note 4)	1	
-10	108313	. Handwheel (94120) (Note 4)	1	
-11	108326	. Washer (94120) (Note 4)	1	
-12	108317	. On/Off Indicator Ring (94120) (Note 4)	1	
-13	108318	. Bonnet (94120) (Note 4)	1	
-14	820015	. O-Ring (94120) (Note 2)	1	
-15	828009	. Backup Ring (94120) (Note 2)	1	
-16	820010	. O-Ring (94120) (Note 2)	1	
-17	108328	. Spacer (94120) (Note 4)	1	
-18	108327	. Washer (94120) (Note 2)	1	
-19	108319	. Stem (94120) (Note 4)	1	

Figure and Index Number	Part Number	Description 1 2 3 4 5 6 7	Units Per Assembly	Usable On Code
-20	108322	. Valve Seat (94120) (Note 2)	1	
-21	108307	. Fill Port Plug (94120) (Note 4)	1	
-22	820319	. O-ring (94120) (Note 2)	1	
-23	108308	. Fill Adapter Port (94120) (Note 4)	1	
-24	820319	. O-Ring (94120) (Note 2, 3)	2	
-25	820304	. O-Ring (94120) (Note 2, 3)	1	
-26	108309	. Check Valve (94120) (Note 4)	1	
-27	742537	. Pressure Indicator, Dial (94120) (Note 4)	1	
-28	820319	. O-Ring (94120) (Note 2)	1	
-29	108302	. Cap Protector (94120) (Note 4)	1	
-30	108303	. Piston Cap (94120) (Note 4)	1	
-31	820062	. O-Ring (94120) (Note 2)	1	
-32	106769	. Piston (94120) (Note 4)	1	
-33	820007	. O-Ring (94120) (Note 2)	1	
-34	106726	. HP Seat (94120) (Note 2)	1	
-35	106771	. Spring (94120) (Note 4)	1	
-36	108312	. First-stage Body (94120) (Note 4)	1	
-37	820316	. O-Ring (94120) (Note 2)	1	
-38a	079105	Cylinder, 1.5 cu. ft. (94120) (Note 4)	1	A
-38b	TBD	Cylinder, 2.0 cu. ft. (94120)	1	B
-39	820010	. O-Ring (94120) (Note 2)	1	
	108343	First-Stage Service Kit	1	A, B

Notes:
1. The First-stage assembly is not procurable as a single component.
2. These items are part of the First-Stage Service Kit Figure 7-3.
3. Additional O-Rings may be discarded or retained for future use.
4. These items must be ordered open purchase from the following source:
   Aqua Lung, Inc.
   2340 Cousteau Court
   Vista, CA 92083
   POC: Military Sales
   Phone: 760-597-5000 ext. 5081
   Toll Free: 877-252-3483
   FAX: 760-597-4914

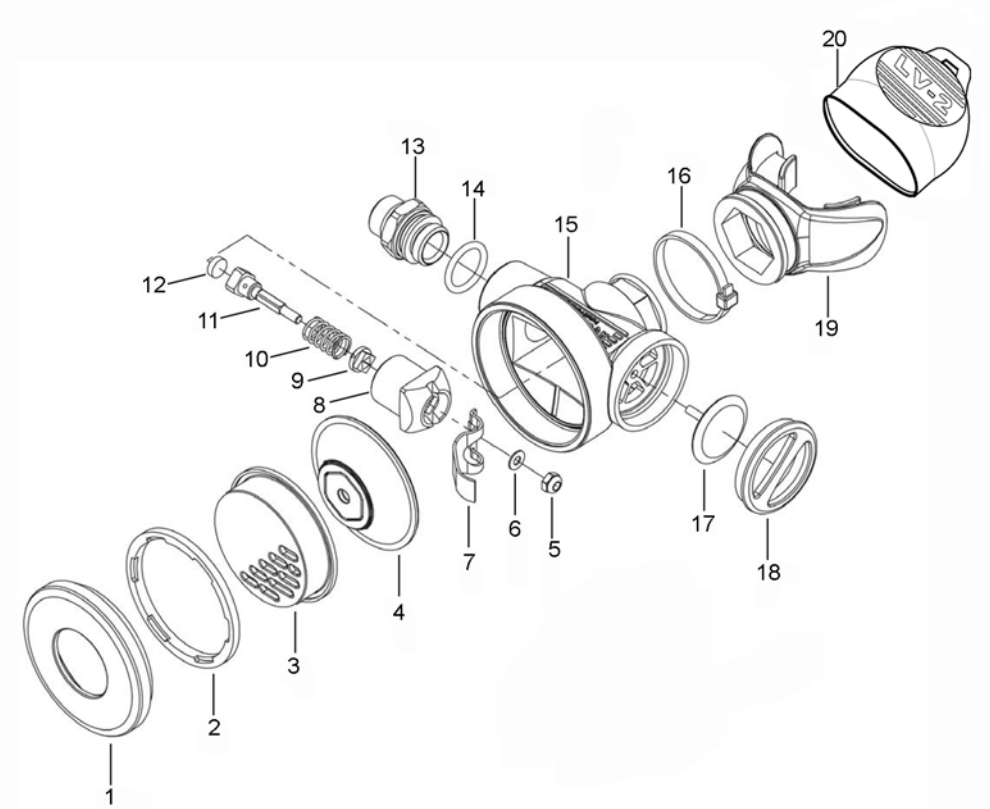

Figure 7-31. LV2 Second-Stage

Figure and Index Number	Part Number	Description	Units Per Assembly	Usable On Code
7-31	108402	SECOND STAGE ASSEMBLY (94120) (Note 1)	1	A, B
-1	100652	. Front Cover (94120) (Note 2)		
-2	100119	. Retaining Ring (94120) (Note 2)		
-3	100104	. Purge Cover (94120) (Note 2)		
-4	100181	. Diaphragm (94120) (Note 2)		
-5	102510	. Locknut (94120) (Note 1)		
-6	104129	. Washer (94120) (Note 2)		
-7	100923	. Lever (94120) (Note 2)		
-8	100945	. Valve Body (94120) (Note 2)		
-9	104134	. Poppet Bearing (94120) (Note 1)		
-10	104127	. Spring (94120) (Note 2)		
-11	104122	. Poppet (94120) (Note 2)		
-12	106738	. LP Seat (94120) (Note 1)		
-13	108348	. Inlet Fitting (Black) (94120) (Note 2)		
-14	820015	. O-Ring (94120) (Note 1)		
-15	108347	. Box Bottom (94120) (Note 2)		
-16	104913	. Clamp (94120) (Note 1, 3)		
-17	100122	. Exhaust Valve (94120) (Note 1)		
-18	108371	. Exhaust Cover (94120) (Note 2)		
-19	108373	. Mouthpiece, LV2 (94120) (Note 3)		
-20	108451	. Mouthpiece Cover (Note 3)		

Figure and Index Number	Part Number	Description	Units Per Assembly	Usable On Code
	108344	Second-Stage Service Kit (Note 4)	1	A, B

Notes:
1. These items are part of the Second-Stage Service Kit.
2. These items must be ordered open purchase from the following source:
   Aqua Lung, Inc.
   2340 Cousteau Court
   Vista, CA 92083
   POC: Military Sales
   Phone: 760-597-5000 ext. 5081
   Toll Free: 877-252-3483
   FAX: 770-597-4914
3. P/Ns 104913, 108373 and 108451 are available through supply for "O" level activities replacing the mouthpiece.
4. The Second-Stage Kit contains P/N 100922 (x2), these are for the SEA MK Second-Stage and shall be discarded.

NUMERICAL INDEX

Part Number	Figure and Index Number	SM&R Code
054201	7-30-6	PAGZZ
079105	7-30-38a	PAGZZ
100122	7-31-17	KFGZZ
	7-33-17	KFGZZ
100652	7-31-1	PAGZZ
	7-33-1	PAGZZ
100104	7-31-3	PAGZZ
	7-33-3	PAGZZ
100119	7-31-2	PAGZZ
	7-33-2	PAGZZ
100181	7-31-4	PAGZZ
	7-33-4	PAGZZ
100923	7-31-7	PAGZZ
	7-33-7	PAGZZ
100945	7-31-8	PAGZZ
	7-33-8	PAGZZ
102510	7-31-5	KFGZZ
	7-33-5	KFGZZ
104122	7-31-11	PAGZZ
	7-33-11	PAGZZ
104127	7-31-10	PAGZZ
	7-33-10	PAGZZ
104129	7-31-6	PAGZZ
	7-33-6	PAGZZ
104134	7-31-9	KFGZZ
	7-33-9	KFGZZ
104913	7-31-16	KFOZZ
	7-33-16	KFOZZ
106726	7-30-34	KFGZZ
106738	7-31-12	KFGZZ
	7-33-12	KFGZZ
106769	7-30-32	PAGZZ
106771	7-30-35	PAGZZ
108302	7-30-29	PAGZZ
108303	7-30-30	PAGZZ
108304	7-30-7	PAGZZ
108305	7-30-1	PAGZZ
108306	7-30-5	PAGZZ
108307	7-30-21	PAGZZ
108308	7-30-23	PAGZZ
108309	7-30-26	PAGZZ
108312	7-30-36	PAGZZ
108313	7-30-10	PAGZZ
108316	7-30-9	PAGZZ
108317	7-30-12	PAGZZ
108318	7-30-13	PAGZZ
108319	7-30-19	PAGZZ
108322	7-30-20	KFGZZ
108326	7-30-11	PAGZZ

Part Number	Figure and Index Number	SM&R Code
108327	7-30-18	KFGZZ
108328	7-30-17	PAGZZ
108329	7-30-8	PAGZZ
108343	7-30	PAGZZ
108344	7-31	PAGZZ
	7-33	PAGZZ
108347	7-31-15	PAGZZ
	7-33-15	PAGZZ
108348	7-31-13	PAGZZ
	7-33-13	PAGZZ
108371	7-31-18	PAGZZ
	7-33-18	PAGZZ
108373	7-31-19	PAOZZ
	7-33-19	PAOZZ
108391	7-30-4	PAGZZ
108402	7-31	PAGZZ
	7-33	PAGZZ
108425	7-30	PAGZZ
108445	7-28	PAOGG
	7-30	PAOGG
108451	7-31-20	PAOZZ
	7-33-20	PAOZZ
1586AS400-1	7-28	PAOGG
742537	7-30-27	PAGZZ
820007	7-30-33	KFGZZ
820010	7-30-16	KFGZZ
	7-30-39	KFGZZ
820015	7-30-14	KFGZZ
	7-31-14	KFGZZ
	7-33-14	KFGZZ
820062	7-30-31	KFGZZ
820304	7-30-25	KFGZZ
820311	7-30-3	KFGZZ
820312	7-30-2	KFGZZ
820316	7-30-37	KFGZZ
820319	7-30-22	KFGZZ
	7-30-24	KFGZZ
	7-30-28	KFGZZ
828009	7-30-15	KFGZZ

CHAPTER 8

CREWMEMBER'S AIRCRAFT SAFETY BELT MS16070-2, MS16070-3, AND MS16070-21

Section 8-1. Description

8-1. GENERAL.

NOTE

All aircraft installed safety belts, shoulder harnesses, inertia reels and cargo strap assemblies shall be inspected in accordance with applicable aircraft MRC's.

8-2. The Crewmember's Aircraft Safety Belt (figure 8-1), is a safety restraint system to be used by all crewmembers and passengers aboard military aircraft.

8-3. CONFIGURATION.

8-4. Each Safety Belt is made of nylon webbing and is provided with adapters for adjustment. All of the Safety Belt assemblies have a latch and link assembly with a leather protector.

WARNING

All cotton webbing Crewmember's Safety Belts shall be removed from service.

NOTE

Crewmember's Aircraft Safety Belt MS16070-21 will replace the MS16070-2 and MS16070-3 by attrition. Snap hook P/N MS70120 on MS16070-21 Safety Belts is not compatible with H-3 Crew Station 346.

8-5. APPLICATION.

8-6. The Safety Belt shall be worn at all times by aircrewmembers aboard military aircraft as a restraint system during flight as required by NATOP manuals.

NOTE

The Crewmember's Aircraft Safety Belt must be worn high on the chest and snug to prevent inadvertent release of latch mechanism.

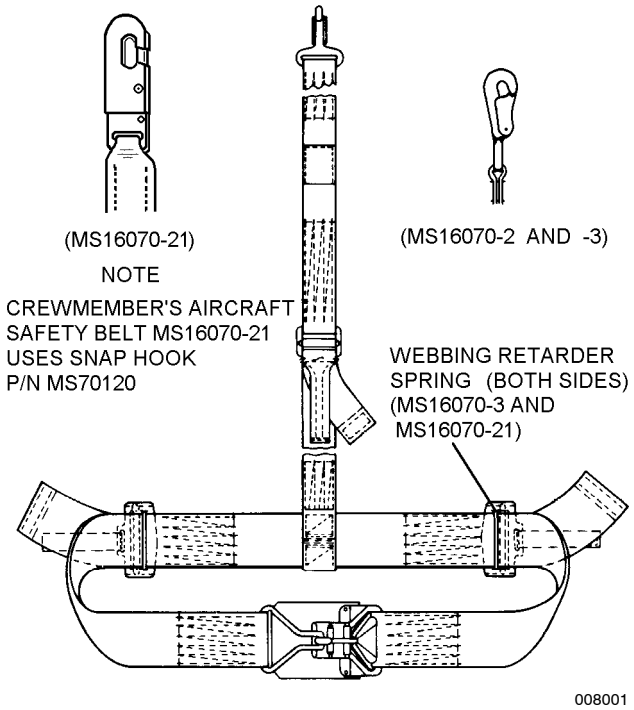

Figure 8-1. Crewmember's Aircraft Safety Belt (MS16070-2, MS16070-3, and MS16070-21)

Section 8-2. Modifications

8-7. GENERAL.

8-8. Table 8-1 lists the current directives affecting the Crewmember's Aircraft Safety Belt. Modification instructions for Crewmember's Aircraft Safety Belt are listed in table 8-2.

8-9. CREWMEMBER'S AIRCRAFT SAFETY BELT LATCH MECHANISM. Modify Crewmember's Aircraft Safety Belt Latch Mechanism to correct faulty release tendency as follows:

Materials Required

Quantity	Description	Reference Number
As Required	Screw 1/4-20 x 7/16	NIIN 00-988-1722 or Equivalent
As Required	Elastic Stop Nut 1/4-20	NIIN 00-208-1919 or Equivalent

1. Disengage lapbelt latch mechanism.

2. Drill 1/4-inch hole in webbing belt link on centerline with hole centered exactly 1/4-inch from rectangular latch hole.

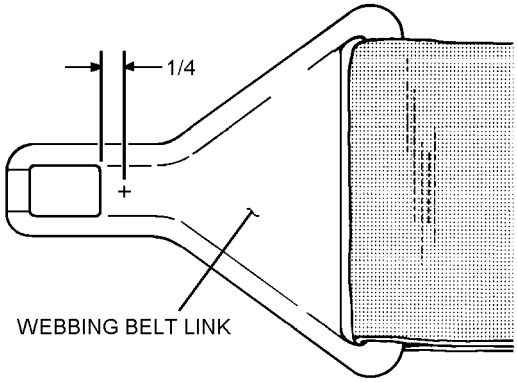

08009002

Step 2 - Para 8-9

NOTE

Addition of the nut and bolt will limit link travel within the latch mechanism thereby preventing inadvertent release.

Table 8-1. Crewmember's Aircraft Safety Belt Directives

Description of Modification	Application	Modification Code
Incorporation of webbing retarder springs on Crewmember's Aircraft Safety Belts.	All Crewmember's Aircraft Safety Belts	ACC 645 - TDC 66

Table 8-2. Crewmember's Aircraft Safety Belt Modifications

Description of Modification	Application	Paragraph
Modification of Crewmember's Aircraft Safety Belt Latch Mechanism.	All Crewmember's Aircraft Safety Belts as required	8-9
Modification of Crewmember's Aircraft Safety Belt Webbing End-Stop.	All Crewmember's Aircraft Safety Belts	8-10
Crewmember's Aircraft Safety Belt Chest Strap Extension.	All Crewmember's Aircraft Safety Belts as required	8-11
Incorporation of Webbing Retarder Springs on Crewmember's Aircraft Safety Belt.	All Crewmember's Aircraft Safety Belts	8-12

3. Install a 1/4-inch nut (elastic stop) and bolt through hole drilled in step 2.

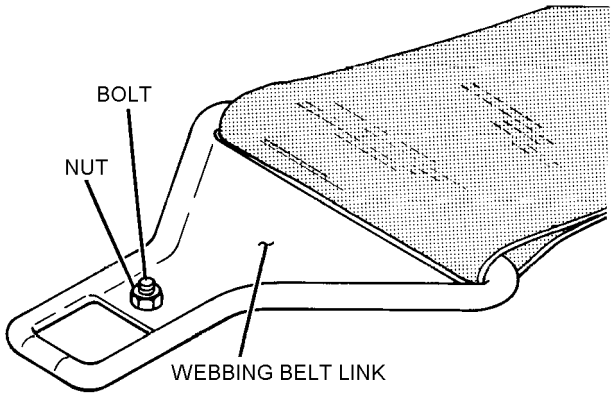

08009003

Step 3 - Para 8-9

8-10. CREWMEMBER'S AIRCRAFT SAFETY BELT END-STOP. Crewmember Aircraft Safety Belt End-Stops shall be modified as follows to prevent being pulled through adjustment adapters.

Materials Required

Quantity	Description	Reference Number
As Required	Thread, 6-cord Olive Drab	NIIN 00-559-5211

NOTE

Increasing the thickness of the end stops will prevent them from being inadvertently pulled through the waist adjustment adapters.

1. Fold webbing belt end-stop of short waist belt over to double existing thickness forming four layers of webbing at belt end.

2. Following existing stitch pattern (5-6 stitches per inch) sew the four-thickness fold in place with a single 3 x 3/4 inch box stitch using 6-cord thread.

3. Repeat steps 1 and 2 for each of the short waist belts.

4. Repeat steps 1 and 2 to modify the end-stop of pigtail end of long belt except sew four-thickness fold of end-stop in place using single 1 x 1 3/4-inch box stitch.

8-11. CREWMEMBER'S AIRCRAFT SAFETY BELT CHEST STRAP EXTENSION. Crewmember's Aircraft Safety Belts, which can not be adjusted outward sufficiently to encompass the aircrewmember when wearing body armor or other bulky items, may be lengthened as follows:

Materials Required

Quantity	Description	Reference Number
68 Inches	Webbing, Nylon Type IX, 3 Inch Width	NIIN 00-261-8846 or Equivalent
As Required	Thread, Nylon, Size 6	NIIN 00-204-3749
As Required	Ink, Indelible Laundry, Black	SPE-92 NIIN 00-161-4229

1. Lay belt on work bench with female portion of the buckle laying to the left and male to the right.

2. Separate female portion of the buckle from the webbing by cutting with scissors or razor blade. Remove webbing from adjustment adapter. Discard webbing.

3. Cut a 34 inch length of Type IX webbing. Sear ends.

4. With latch mechanism facing up, thread webbing through buckle 5 inches from back to front.

5. Sew a 4 1/2 inch equally spaced six point W 1/4 inch from webbing edge. Overstitch ends at least 1 inch.

6. Thread opposite end of webbing through adjustment adapter. Fold end 3 times with first fold being 3/4 inch.

7. Sew the four-thickness fold in place with a 2 3/4 x 3/4-inch box stitch using size 6 thread.

8. Using indelible black ink, stencil LEFT EXTENDED near the buckle end of the webbing, before the fold, in 1/2-inch letters.

9. Repeat steps 2 through 8 with male end, except stencil webbing with RIGHT EXTENDED.

8-12. INSTALLATION OR REPLACEMENT OF CREWMEMBER'S AIRCRAFT SAFETY BELT WEBBING RETARDER SPRINGS. To install the webbing retarder springs on the Crewmember's Aircraft Safety Belt, proceed as follows:

Materials Required

Quantity	Description	Reference Number
2	Spring, Lapbelt, Web	62B4407 NIIN 00-975-2987
1	Spring, Lapbelt, Web	65D34083-7 NIIN 00-853-5464
16 Inches	Cord, Nylon, Type I	MIL-C-5040E NIIN 01-308-6122
As Required	Ink, Indelible Laundry, Black	SPE-92 NIIN 00-161-4229

1. Check the adjusters on the belt to determine if the springs are installed. If springs are not incorporated, proceed with step 2. (For MS16070-2 safety belts) If springs are incorporated, refer to step 3 for P/N modification.

2. Locate the adjusters on the belt and install springs as follows:

a. Cut a 16-inch length of Type I nylon cord and tie ends together to form a loop.

b. Hook one end of webbing retarder spring under and around flat end of knurled locking bar inside the adjuster plate.

c. Insert unknotted end of loop through the slot of the adjuster plate from the outside and hook loop over the free spring hook end.

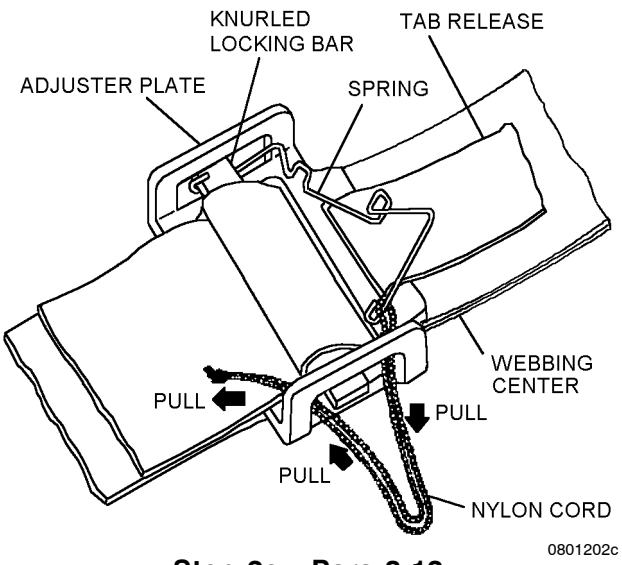

Step 2c - Para 8-12

NOTE

Care should be taken not to bend the spring when pulling cord through buckle.

d. Pull the cord through the slot and around the locking bar.

e. Press the bar back with thumb, leaving enough space to slide the loop back through the slot, pull cord over knurled locking bar.

f. Snap center of webbing retarder spring into adjuster plate pull-tab slot.

g. Ensure the safety belt webbing is centered on the adjuster plate knurled knob and can be adjusted as desired.

h. Repeat steps 2b thru 2g for other adjusters.

3. (MS16070-2 Safety Belts only) Using black indelible ink, re-identify the belt by marking over the -2 in the part number on the label and replacing it with a -3. The part number should read MS16070-3.

4. Make necessary entries on appropriate forms in accordance with COMNAVAIRFORINST 4790.2.

Section 8-3. Maintenance

8-13. GENERAL.

8-14. Maintenance or repair actions required on the Crewmember's Aircraft Safety Belt shall be performed by Organizational Level or above.

8-15. INSPECTION.

WARNING

All cotton webbing Crewmember's Safety Belts shall be removed from service.

8-16. The Crewmember's Aircraft Safety Belt shall be subjected to a Place-In-Service Inspection and Special Inspection.

8-17. PLACE-IN-SERVICE INSPECTION. The Crewmember's Aircraft Safety Belt shall be inspected prior to place-in-service. The Place-In-Service Inspection shall be performed in accordance with paragraph 8-18, steps 1 thru 6.

8-18. SPECIAL INSPECTION. The Crewmembers Aircraft Safety Belt shall be inspected every 90 days for personal issue or at intervals to coincide with the assembly in which it is installed. To perform the Special Inspection, proceed as follows:

1. Inspect webbing for wear, fraying, broken stitches, cuts, contamination and fading of material.

2. Inspect hardware for corrosion, security of attachment, cracks, wear and ease of operation.

NOTE

Future procurements of the Crewmember's Aircraft Safety Belt will have the four layers of webbing incorporated at the manufacturer's level. The updated configuration will be initiated through attrition.

3. Inspect waist end-stops for four turns of webbing. Webbing end-stops must have four turns to prevent slippage of belt through adjustment adapters. Refer to paragraph 8-10 for corrective procedures.

4. Inspect belt latch mechanism for premature/faulty release tendency.

a. Disengage lap belt latch mechanism.

b. Attempt to insert the shank end of a 23/64-inch drill bit between saddle and latch base while holding centerline of drill parallel to surface of latch base.

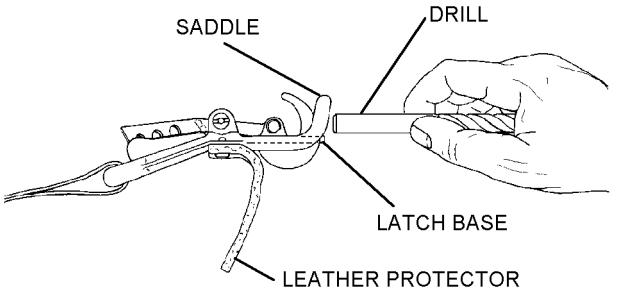

Step 4b - Para 8-18

NOTE

If drill shank cannot be inserted, no corrective action is necessary. If drill shank can be inserted, refer to paragraph 8-9 for corrective procedures.

c. If belt has been modified in accordance with paragraph 8-9, check screw and locknut for security. If loose, it shall be replaced with a new screw and lock nut. Do not retighten loose lock-nut.

5. Inspect webbing retarder springs on waist belt and tail adjusters for security of attachment. If springs are missing, bent, or loose; refer to paragraph 8-12 for corrective procedures.

6. Inspect for proper markings. Refer to paragraph 8-21 for marking procedures.

7. For modification of chest strap, refer to paragraph 8-11 for procedures.

8. Repair in accordance with paragraph 8-19.

9. Clean in accordance with paragraph 8-22.

8-19. REPAIR.

8-20. Repairs are limited to minor stitching, restoration of markings, and replacement of retarder springs.

Table 8-3. Safety Belt Markings

Description	Marking	Location	Letter Height
All safety belts shall have an identification label in accordance with MIL-L-15040, Type I, size 1.	[Stencil nomenclature of item] PART NUMBER [stencil applicable number] MFR. [stencil name of manufacturer]	Each half of the safety belt on the outside of the adjustable portion of the webbing, in close proximity to the buckle assembly.	1/2 inch
Notes: 1. All words enclosed by brackets in the column headed MARKINGS shall not be stencilled on the equipment; they are to be regarded as instructions only.			

NOTE

The use of 6-cord is required to make sewing repairs. If a Class 7 sewing machine or equivalent is not readily available to perform repairs, discard belt and replace.

1. No more than three repairs allowed per belt assembly.

2. No more than three broken stitches allowed per repair.

8-21. MARKINGS. Compare markings on Safety Belts to markings listed in table 8-3. Restore faded markings. Correct any markings which do not agree with the table. To change markings, proceed as follows:

Materials Required

Quantity	Description	Reference Number
As required	Ink, Indelible Laundry, Black	SPE-92 NIIN 00-161-4229

1. If marking is faded, restore marking.

2. If marking is incorrect, paint out incorrect marking and enter correct marking as close to proper location as possible using black indelible ink.

8-22. CLEANING.

8-23. To clean the Crewmember's Aircraft Safety Belt, proceed as follows:

Materials Required

Quantity	Description	Reference Number
As Required	Detergent	MIL-D-16791
As Required	Cloth, cleaning	MIL-C-85043

1. Rinse belt with clean fresh water. Using a cloth and a mixture of clean water and detergent, scrub or wipe contaminated area until area is clean. Rinse a second time with fresh water to remove soap and contaminants. Hang to dry.

2. Remove corrosion in accordance with NAVAIR 01-1A-509 manual.

8-24. SERVICE/SHELF LIFE.

8-25. There is no service/shelf life for nylon webbing.

8-26. H-53 RAMP GUNNER'S EXTENSION BELT.

WARNING

The Ramp Gunner's Extension Belt shall only be utilized by the Ramp Gunner on the H-53 aircraft. The extension belt is not authorized for any other aircraft use or aircrewmember.

NOTE

The H-53 Ramp Gunner's Extension Belt is used in conjunction with the Crewmembers Aircraft Safety Belt, MS-16070-2, -3 and -21.

8-27. GENERAL. Inspection of the Ramp Gunner's Extension Belt shall be in accordance with paragraph 8-28. Manufacture in accordance with paragraph 8-33.

8-28. INSPECTIONS. Ramp Gunner's Extension Belts that were manufactured by NAWCAD and are initially distributed for use shall be inspected prior to placing in service. All Ramp Gunner's Extension Belts shall be inspected every 90 days or at intervals to coincide with the assembly to which it is installed. Inspections shall be performed in accordance with paragraphs 8-29, 8-30, 8-31 and 8-32.

8-29. SPECIAL INSPECTION. Inspect the Ramp Gunner's Extension Belt as follows:

1. Inspect webbing for wear, fraying, broken-stitches, cuts, contamination, and fading of material.

2. Inspect hardware for corrosion, security of attachment, cracks, wear, and ease of operation.

3. Inspect for legibility of markings. If required, re-stencil in accordance with paragraph 8-34.

8-30. REPAIR. There are no repairs authorized for the Ramp Gunner's Extension Belt. Remove from service when discrepancies are noted.

8-31. CLEANING. Clean in accordance with paragraph 8-22.

8-32. SERVICER/SHELF LIFE. There is no service/shelf life requirement.

8-33. H-53 RAMP GUNNER'S EXTENSION BELT MANUFACTURING PROCEDURES. Manufacturing shall be accomplished at Intermediate Maintenance level activities or those activities that have the support equipment to perform the following procedures:

Materials Required

Quantity	Description	Reference Number
1	Snap Link Type II Mountain Piton	A-A-50041 NIIN 01-322-7432
1	Ring, Parachute Harness	MS 22046-1 NIIN 00-339-8601
As Required	Webbing, Type 19	MIL-W-4088 NIIN 00-527-8245
As Required	Thread, Type FF	V-T-295 NIIN 00-527-5211
As Required	Thread, Type 6 Cord	V-T-295 NIIN 00-227-1244

NOTE

All stitching shall be in accordance with ASTM D6193, Type 301 lockstitch, 5 to 6 stitches per inch with 3/4 inch minimum backstitching whenever possible. All cut nylon ends shall be seared.

1. Cut and sear one piece of Type 19 webbing 120 inches long and place webbing on a flat surface.

2. Measure and make a mark 7 3/4 inches and 64 inches from right end of webbing.

3. Turn webbing over, keeping the current marked side to the right, measure and make a mark 6 inches from the left side of webbing.

4. Turn webbing over to side marked in step 2.

5. At the 64-inch mark, fold webbing salvaged edges (finished) inboard towards each other forming a handle fold, 1 inch wide with a 3 inch webbing arch. Stitch the 1 inch wide webbing fold using 3 rows of 6 cord, 1/8 inch apart and 1/4 inch from finished edges.

NOTE

The stitches made in step 5 will be considered the center point for the rest of the manufacturing procedures.

6. Place webbing on flat surface with markings from step 2 facing up and to the right. Grasp the left side of the webbing and place the seared end on the 7 3/4-inch mark. (Center point made in step 5 shall now be the left end of the webbing). Measure and make a mark 1 1/2-inches from the center point. Ensure webbing edges are even. Using size FF thread, sew webbing together with a row of stitches 1/4 inch from edges starting from the 7 3/4-inch mark to the 1 1/2-inch mark at center point, around the opposite side and back to starting point and back-stitch.

7. At opposite end of center point, thread single ply of webbing through slotted opening of parachute harness ring and line up with 6-inch mark made in step 3. Measure and make a mark 1 1/2-inch from fold. Sew the three-ply webbing in place from the 1 1/2-inch mark to the seared end with a 5-inch 4-point "W" stitch pattern using 6-cord.

8. At center point end, measure and make a mark 5 inches from the 1 1/2-inch mark made in step 6. Sew a 5-inch, 4-point "W" stitch pattern using 6-cord.

9. Thread snap link mountain piton through the center point opening and secure snap link.

10. Mark extension belt in accordance with paragraph 8-34.

8-34. MARKINGS. Measure 12 inches from snap link. With 1/2-inch stencil and indelible ink, place the following information on webbing:

1. P/N 3861AS100 (above webbing identification line).

2. DOM: MMYY and Organization Code (below webbing identification line).

3. Figures 8-2 and 8-3 are for information purposes. Updated drawings shall be added at a later time.

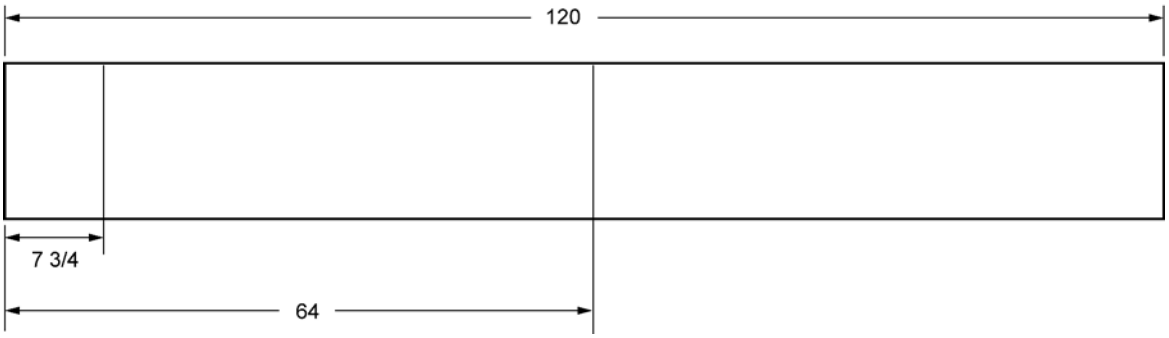

TYPE XIX, MIL-W-4088 WEBBING WITH 7 3/4” AND 64” MARKS

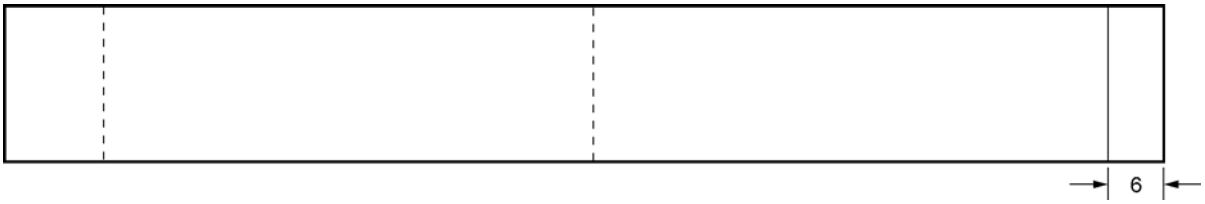

WEBBING WITH 6” MARK

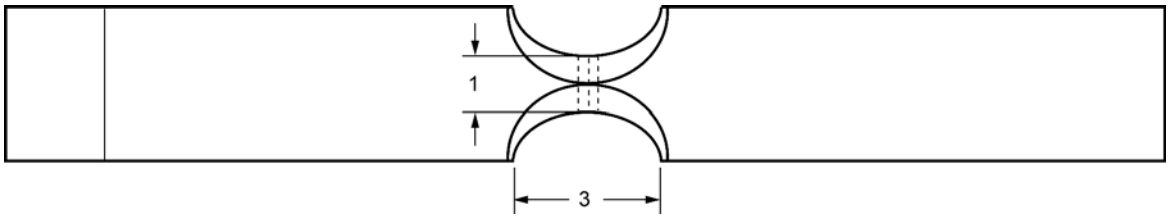

CENTER POINT WITH 6” CORD STITCHING

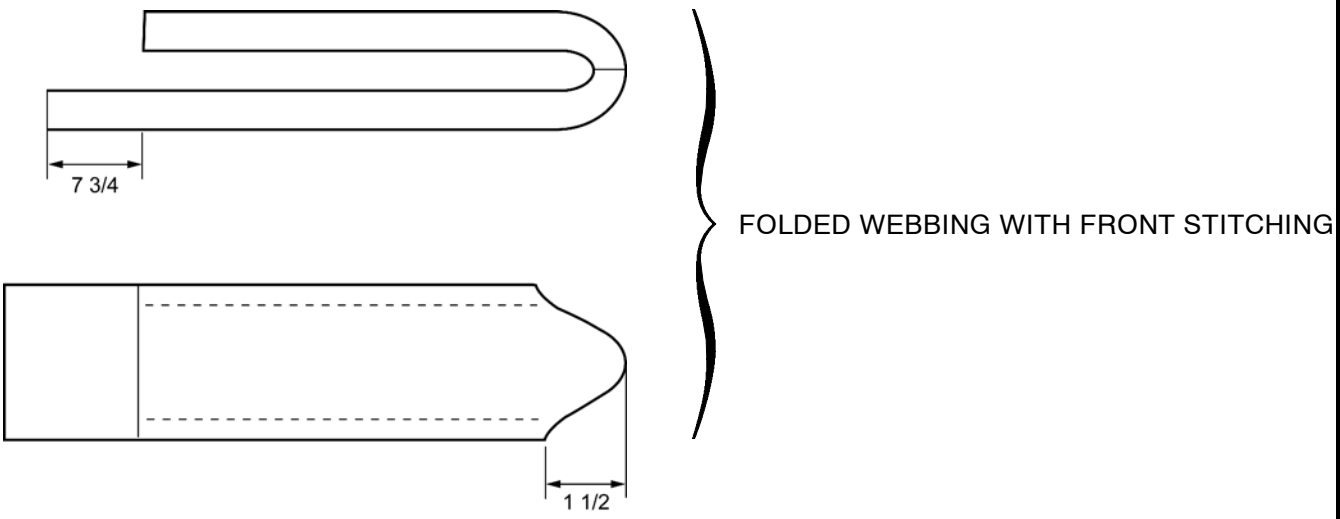

BELT EXTENSION, RAMP GUNNER
(NAVAIR DWG NO. 3861AS100)

Figure 8-2. Ramp Gunner’s Extension Belt Sewing Procedures

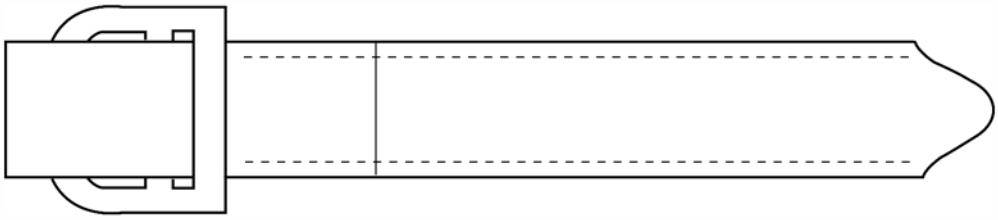

PARACHUTE HARNESS RING REEVING

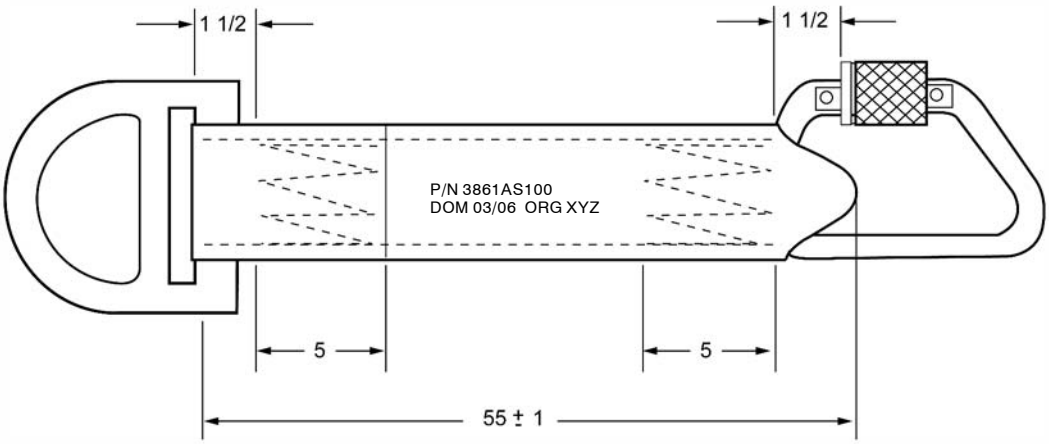

FINISHED DIMENSIONS

Figure 8-3. Ramp Gunner's Extension Belt Sewing Procedures

CHAPTER 9

SURVIVAL ITEMS

Section 9-1. Water Storage Bag

9-1. DESCRIPTION.

9-2. The Water Storage Bag is a plastic bag used to store fresh water or protect miscellaneous items from salt water.

9-3. CONFIGURATION.

9-4. The Water Storage Bag (MIL-B-8571, NIIN 00-485-3034) is made of plastic and is capable of holding 5 quarts of water. The bag comes complete with a buckle, snap fastener and carrying strap for easy attachment to personnel or equipment (figure 9-1).

9-5. APPLICATION.

9-6. The Water Storage Bag may be used to store fresh water, protect miscellaneous items from salt water, and may be used as water wings when inflated and tied together.

9-7. MAINTENANCE.

9-8. Maintenance of the Water Storage Bag is limited to a Visual Inspection.

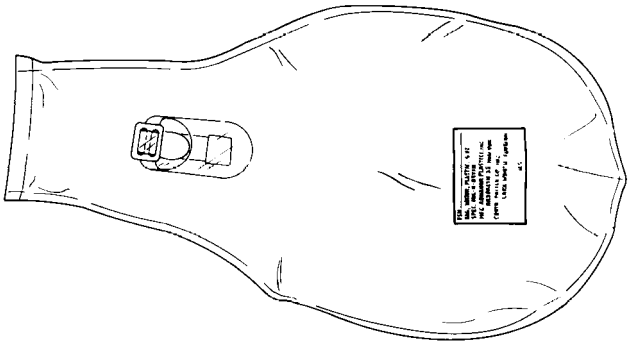

009001

Figure 9-1. Water Storage Bag

9-9. INSPECTION. The Water Storage Bag shall be inspected upon issue and every 90 days thereafter, or at intervals to coincide with the inspection schedule of the kit or assembly in which the water storage bag is stored. To inspect the water storage bag, proceed as follows:

1. Inspect bag for open seams or holes.

2. Replace defective bags if there is a leak.

Section 9-2. Clear Vinyl Water Storage Bag

9-10. DESCRIPTION.

9-11. The Clear Vinyl Water Storage Bag is made with a folded velcro enclosure for leak resistant seal. It has an attached lanyard to secure it to personnel or equipment.

9-12. CONFIGURATION.

9-13. The Clear Vinyl Water Storage Bag (NIIN 01-452-4193) is 5 x 7 inches (figure 9-2).

9-14. APPLICATION.

9-15. The 5 x 7-inch Clear Vinyl Water Storage Bag shall be rolled and stored behind bagged water in aircrewmember's survival vest. This storage bag is an authorized alternate for one-quart size water bag presently stored in Individual Aircrewmember's Survival Kit, SRU-31/P.

NOTE

Water Storage Bags may be used for storing fresh water or protecting selected items from salt water contamination. The large opening in water bags permit their use for other purposes.

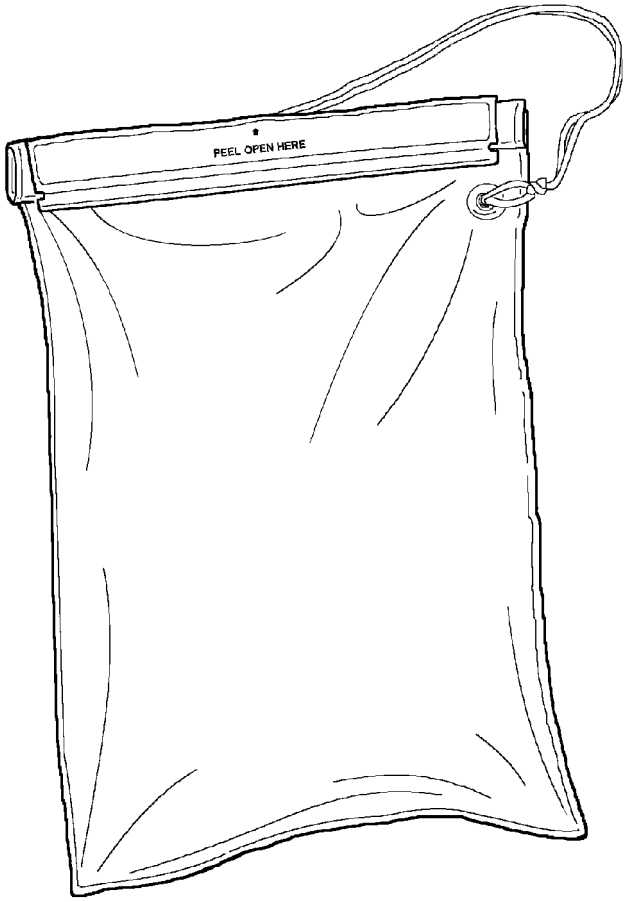

009002

Figure 9-2. Clear Vinyl Water Storage Bag

9-16. MAINTENANCE.

9-17. Maintenance of Water Storage Bag is limited to Visual Inspection.

9-18. INSPECTION. The Clear Vinyl Water Storage Bag shall be inspected upon issue and every 90 days thereafter or at intervals to coincide with inspection cycle of kit or assembly in which water bag is stored. To inspect the Clear Vinyl Water Storage Bag, proceed as follows:

1. Inspect water bag for leakage, open seams, holes, cracks, or other defects.

2. Inspect velcro for retention of closure capability.

3. Inspect lanyard for fraying and security of knots.

NOTE

Defective bags and lanyards shall be replaced.

Section 9-3. Combat Casualty Blankets

9-19. DESCRIPTION.

9-20. The Combat Casualty Blankets are used to provide aircrewmembers with warmth and protection from the elements, and as a signaling aid for rescue purposes.

9-21. CONFIGURATION.

9-22. The Combat Casualty Blankets are of two types. Type I, heavyweight (NIIN 00-935-6665), is 84 x 56 inches. Type II, lightweight (NIIN 00-935-6666), is 96 x 56 inches. Both blankets are olive drab/silver, waterproof, and made of aluminized plastic. Applicable reference document is MIL-B-36964 (figures 9-3 and 9-4).

9-23. APPLICATION.

9-24. The Combat Casualty Blankets are intended to provide warmth and protection from the elements and are capable of acting as a windbreaker, sunshade, poncho, or position indicator on rescue missions. In excessively windy conditions, the Combat Casualty Blankets may be held in position with adhesive tape and can be used in all liferafts.

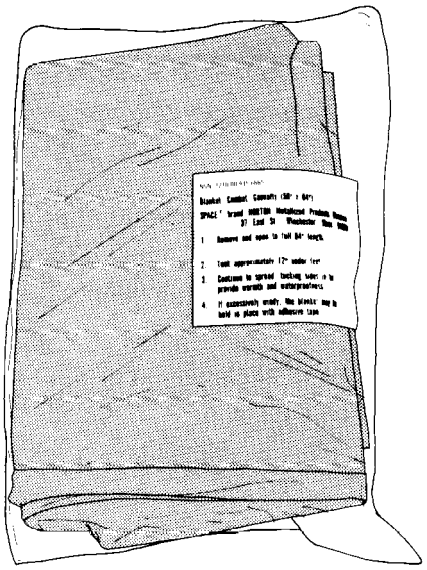

009003

Figure 9-3. Combat Casualty Blanket, Type I

9-25. MAINTENANCE.

9-26. Maintenance of the Combat Casualty Blanket is limited to inspection.

9-27. INSPECTION. The Combat Casualty Blanket shall be inspected upon issue and every 90 days thereafter, or at intervals to coincide with the inspection schedule of the kit or assembly in which the Combat Casualty Blanket is stored. To inspect the Combat Casualty Blanket, proceed as follows:

1. Inspect for severe abuse/mishandling.
2. Visually inspect for flaking.
3. If bag is opened, place in self-seal bag.

009004

Figure 9-4. Combat Casualty Blanket, Type II

Section 9-4. Wool Blanket

9-28. DESCRIPTION.

9-29. Blanket, Wool (MIL-B-844, NIIN 00-082-5668) (figure 9-5) is a shrink resistant and moth proof bed covering. The standard wool blanket approximately 6 x 8 feet is used for treatment of hypothermia.

9-30. APPLICATION.

9-31. Wool Blankets are part of the Helicopter Rescue Equipment Bag (BGU-8/N), carried on SAR capable rotary wing aircraft.

9-32. MAINTENANCE.

9-33. Maintenance operations shall be performed by Organizational Level or above. All maintenance actions and inspections shall be recorded on appropriate form in accordance with COMNAVAIRFORINST 4790.2. Maintenance on blankets is limited to inspection and replacement.

9-34. INSPECTION. All wool blankets shall be subjected to a Special Inspection and Visual Inspection.

9-35. Special Inspection. The Special Inspection shall be performed prior to placing in use and every 90 days thereafter.

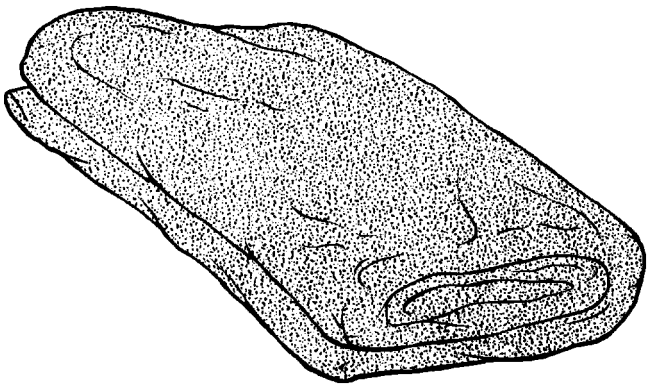

009005

Figure 9-5. Wool Blanket

9-36. Visual Inspection. To perform a Visual Inspection proceed as follows:

NOTE

If any of the following conditions are found, the blanket shall be replaced.

1. Inspect for cuts, deterioration, and fraying.

2. Inspect for oil, fuel, or grease contamination.

3. Make necessary entries on appropriate forms in accordance with COMNAVAIRFORINST 4790.2.

Section 9-5. Emergency Drinking Water Supply Bottle

9-37. DESCRIPTION.

9-38. The Emergency Drinking Water Supply Bottle (NIIN 00-168-6828) has a capacity of 4 ounces (figure 9-6).

9-39. MAINTENANCE.

9-40. Maintenance of the Emergency Drinking Water Supply Bottle is limited to inspection and cleaning.

NOTE

Clean water bottles with clean water only; no soap should be used.

9-41. INSPECTION. The Emergency Drinking Water Supply Bottle shall be inspected and cleaned upon issue and at intervals to coincide with the inspection cycle of the kit or assembly in which it is stored. Inspect Emergency Drinking Water Supply Bottle for cracks, deterioration and signs of contamination. Clean and refill with clean water. In addition, water supply bottles should be refilled at least every 30 days by the aircrewmember.

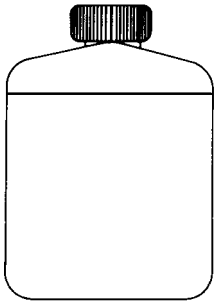

009006

Figure 9-6. Emergency Drinking Water Supply Bottle

Section 9-6. Water Bottle (Canteen)

9-42. DESCRIPTION.

9-43. The Water Bottle (Canteen) (NIIN 00-132-4053) has a capacity of 12 ounces and may be carried as an optional item (figure 9-7).

9-44. MAINTENANCE.

9-45. Maintenance of the Water Bottle (Canteen) is limited to a Visual Inspection and cleaning.

NOTE

Clean Water Bottle (Canteen) with clean water; no soap should be used.

9-46. INSPECTION. The Water Bottle (Canteen) shall be inspected and cleaned upon issue and at intervals to coincide with the inspection cycle of the assembly in which it is installed. Water supply bottles should be refilled at least every 30 days by the aircrewmember. To inspect the 12 ounce Water Bottle (Canteen), proceed as follows:

1. Inspect for cracks and deterioration.

2. Inspect for signs of contamination.

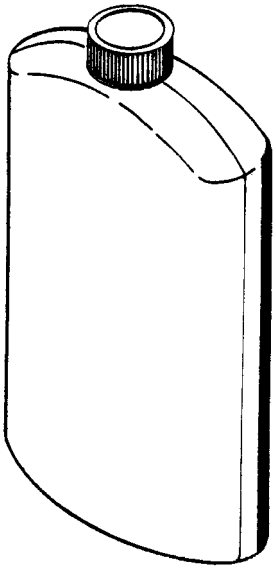

009007

Figure 9-7. 12 Oz. Water Bottle (Canteen)

Section 9-7. Bagged Drinking Water, 4-Ounce

9-47. DESCRIPTION.

9-48. Bagged Drinking Water (NIIN 01-124-4543) is intended for emergency use when no other clean water is available. Survival kits will contain bagged water in a quantity which will support the immediate need of a survivor. Emergency drinking water provided in 4-ounce containers (figure 9-8) should enhance conservation and reduce the risk of spillage and contamination. The bags shall be stowed in a flat configuration.

CAUTION

Bagged Drinking Water shall be stowed in a flat configuration to prevent folds and creases in the aluminized container.

NOTE

Bagged water can be open purchased from Survivor Industries, 4880 Adohr Lane, Camarillo, CA 93012, (800) 263-6818 or other sources that carry the 4-ounce bagged water.

9-49. CONFIGURATION.

9-50. Bagged Drinking Water is supplied in a 4-ounce aluminized (foil) container. It may be modified in accordance with paragraph 9-56 to accommodate tethering or be stowed unmodified when tethering is not required.

9-51. APPLICATION.

9-52. The four-ounce aluminized bagged water shall be used in all applications where 10-ounce canned water is currently used.

9-53. MAINTENANCE.

9-54. Maintenance of the Bagged Drinking Water consists of Visual Inspection and Fabrication and Installation of Tethering Tab as required.

9-55. INSPECTION. Bagged Drinking Water units shall be inspected upon issue and at intervals to coincide with inspection schedule of survival kits or assemblies in which bagged water units are used. To inspect the Bagged Water, proceed as follows:

NOTE

Bagged water reaching overage while packed in seat survival kits or life rafts may remain in service until the next scheduled inspection.

1. Mark the date of manufacturer (month/year) using black indelible ink on each bag of water. Manufacture date is located on the front of each pouch and on each case.

2. The bagged water has a Service/Shelf life of 5 years from date of manufacture. Bagged water without a Date of Manufacturer stamped on pouch or external packaging shall expire no later than 15 months from date placed into service.

3. Place water bag flat on table. Gently press 3 or 4 times with flat of open hand (palm down). Reject bag if any leakage of air or water is detected.

4. Reject bags with breaks or creases in the aluminized material, signs of wear or narrowing of seal along edges, or other signs of exterior damage.

9-56. FABRICATION AND INSTALLATION OF TETHERING TABS. Four-ounce aluminized water bags to be used in tethered configuration (figure 9-11), shall be modified as follows:

Materials Required

Quantity	Description	Reference Number
As Required	Tape, Ordnance, 2W	A-A-1586 NIIN 00-266-5016
As Required	Cord, Nylon, Type I	MIL-C-5040

1. Place 4-ounce aluminized bagged water on flat surface with EMERGENCY DRINKING WATER up and TEAR in upper right corner.

2. Attach lower end of 4-inch length of ordnance tape to upper left corner of the water bag 1 1/2 inches from top edge of bag. Allow upper portion of tape to extend up beyond upper left corner.

3. Fold tape 1/2 inch above top edge of bag down over back of bag to extend 1 1/2 inches from top edge of bag and press tape against bag. This will leave a 1/2 x 2 inch double portion of tape extending above top edge to serve as a tethering tab (figure 9-9).

4. Punch a small hole in center of 1/2 x 2-inch tethering tab.

5. Tether each replacement bag of water separately to the 140-inch survival item tether line in same area in which canned water was tethered.

a. Tie an overhand knot in end of 12-inch length of nylon cord. Pass cord through small hole in 1/2 x 2-inch tethering tab (step 4). Secure knotted-end of 12-inch cord to bag using bowline knot with a 1-inch loop.

b. Secure opposite end of 12-inch cord to overhand loop in the 140-inch survival item tether line using a surgeon's knot positioned snugly against a cord-end overhand knot.

6. When tethering bagged drinking water to the survival vest, follow instructions in step 5a using a 48-inch length of cord. Secure opposite end of cord to survival vest.

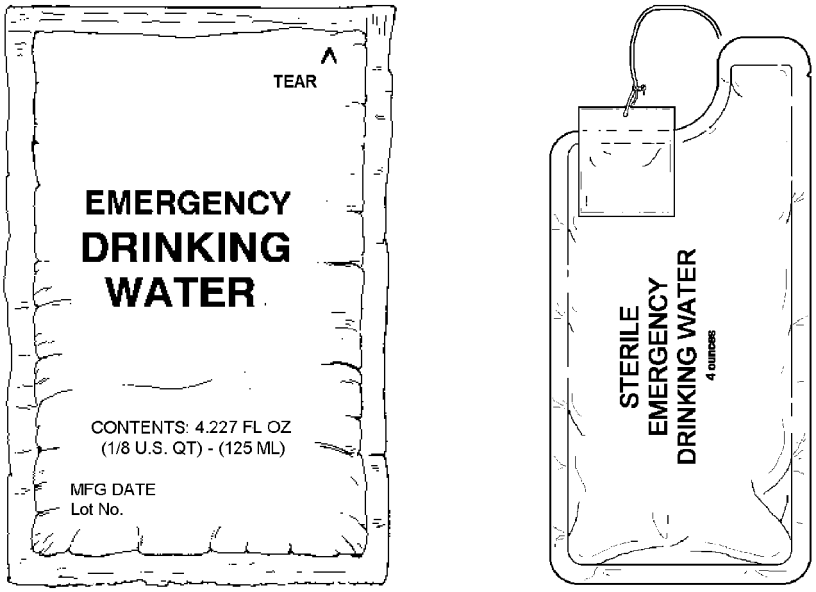

009008

Figure 9-8. Bagged Drinking Water, 4-Oz.

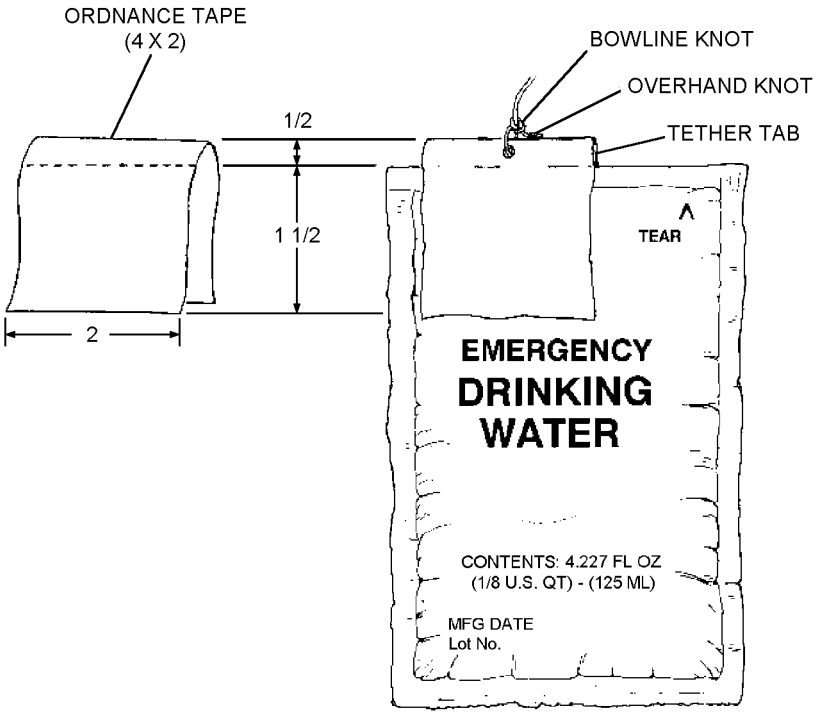

009009

Figure 9-9. Tethering Tab for 4-Oz. Bagged Water

Section 9-8. Water Desalter Kit

9-57. DESCRIPTION.

9-58. Water Desalter Kits (NIIN 00-372-0592) are intended for emergency use when no other fresh water is available. Multi-place liferafts will contain Water Desalter Kits in a quantity which will support the immediate needs of survivors. Water Desalter Kits (figure 9-10) will replace bagged or canned water for use in Arctic/Undertook environments as designated by Type Commanders.

9-59. CONFIGURATION.

9-60. Water Desalter kits are supplied in a sealed metal container containing 8 packages of desalting chemicals, one plastic bag for mixing sea water and desalting chemicals, and one card of repair tape for mending the plastic bag. All parts are tied together with a lanyard. The Water Desalter Kit will be modified in accordance with paragraph 9-66 to remove the restriction on treated water usage given on the last paragraph on the front of the metal container, and to add instructions prohibiting the use of the metal container as a bailing device.

9-61. APPLICATION.

9-62. The Water Desalter Kit shall be used in place of bagged and canned water for Arctic/Antarctic environments as designated by Type Commanders. Refer to NAVAIR 13-1-6.1-1 for liferaft application and quantities.

9-63. MAINTENANCE.

9-64. Maintenance of Water Desalter Kit, Sea Water, Mark 2, Type II consists of Visual Inspection.

9-65. INSPECTION. Water Desalter Kits shall be inspected upon issue and at intervals to coincide with inspection schedule of liferaft assemblies in which they are used. Water Desalter Kits manufactured before 1961 are over-age, all other kits have an indefinite service life and will remain in service until failure to pass inspection requirements. To inspect the Desalter Kit proceed as follows:

1. Inspect metal container for overall condition.

2. Ensure retaining lanyard is securely attached.

3. Ensure electrical tape securing lid of container is firmly attached and is in good condition.

9-66. MODIFICATION.

9-67. Modification of Water Desalter Kit shall be as follows:

Materials Required

Quantity	Description	Reference Number
1	Marker Tube Type	GG-M-00114 (Green) NIIN 00-973-1061
1	Marker Tube Type	PX-0 (Black) NIIN 00-043-3408
As Required	Cord, Nylon Type 1	MIL-C-5040

1. Using black permanent ink completely mark out the entire last paragraph on the front of the metal container that begins “Do not drink any water the first....”.

2. Using block letters, carefully hand print the message as shown on figure 9-10. Print the message across both front and back of container. Letter size is to be approximately 3/8-inch high for the words DO NOT USE AS BAILER. Letter size is to be approximately 1/4 inch high for the words SHARP LIP EDGE MAY DAMAGE RAFT. A soft lead pencil and a straight edge may be used to place guide lines. Use a corner of the green felt tip marker with light pressure to maintain narrow width of lettering. This will permit appropriate thickness and spacing of letters. Note that this is an overprint just heavy enough for the printing underneath to be readily distinguishable. The green color has been selected for the best combination of readability and transparency. Do not use black for lettering. Vigorous rubbing with a soft cloth immediately after application will remove printing errors.

3. Tether each Water Desalter Kit separately using a 48-inch piece of Type 1 nylon cord each. Secure as follows:

a. Tie an overhand knot in end of 48-inch length of nylon cord. Pass cord through retaining lanyard and secure knotted end of cord using a bowline knot with a 1 inch loop.

b. Secure opposite end of 48 inch cord to equipment container.

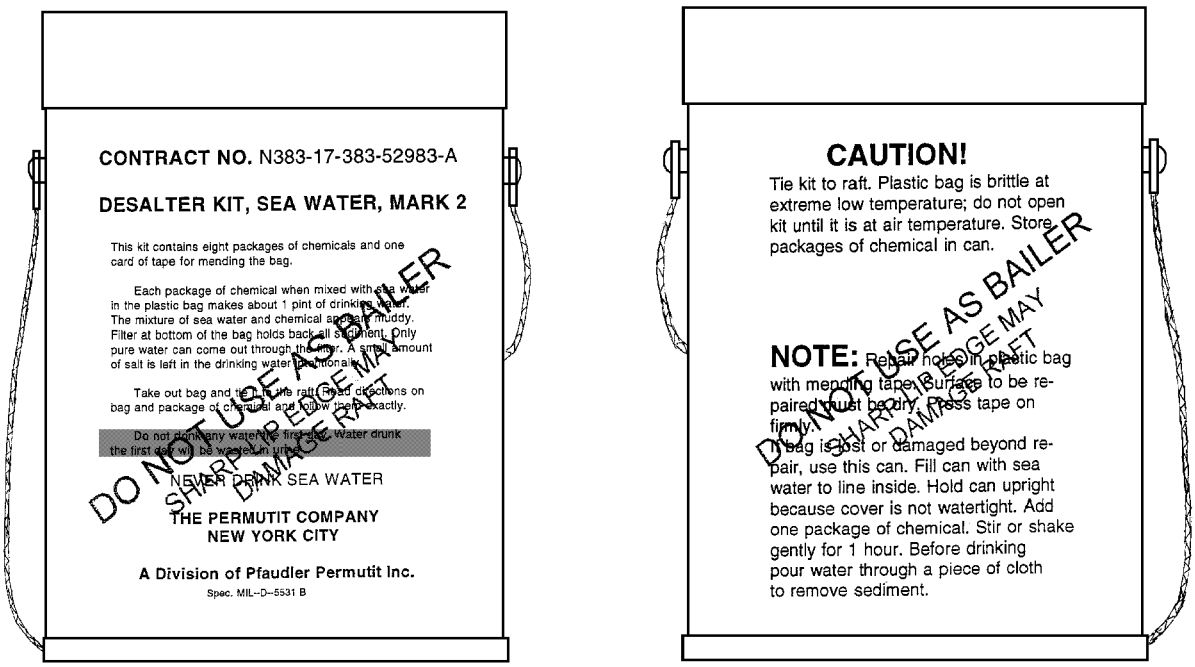

Figure 9-10. Desalter Kit, Sea Water, Mark 2, Type II

Section 9-9. Ground/Air Emergency Code Card

9-68. DESCRIPTION.

9-69. The Ground/Air Emergency Code Card (figure 9-11) is used to assist aircrew personnel in signaling a rescue aircraft.

9-70. CONFIGURATION.

9-71. The Ground/Air Emergency Code Card has aircraft distress signals and aircraft acknowledgements on the front, and liferaft, paulin, and body signals on the back.

9-72. APPLICATION.

9-73. The Ground/Air Emergency Code Card should be used if communication equipment is not operable or available, or if radio silence is required.

NOTE

For additional protection against mutilation, insert code form in a suitable size interlocking seal plastic bag.

Code Card may be locally duplicated using figure 9-11. Protect card by laminating or sealing in plastic bag.

9-74. MAINTENANCE.

9-75. Maintenance of the Ground/Air Emergency Code Card is limited to inspection.

9-76. INSPECTION. The Ground/Air Emergency Code Card shall be inspected upon issue and every 90 days thereafter, or at intervals to coincide with the inspection schedule of the kit or liferaft in which the card is stored. To inspect the Ground/Air Emergency Code Card, ensure that the card is not mutilated or illegible. Insure that plastic code card has rounded corners to prevent sharp edges.

RESCUE / SIGNAL / MEDICAL INSTRUCTION

MAKE SYMBOLS AT LEAST 8FT LONG OF PARACHUTE STRIPS, WOOD, STONES, OR MEN LYING DOWN CONTRASTING TO BACKGROUND.

INTERNATIONAL GROUND - AIR EMERGENCY CODE

- I — REQUIRE DOCTOR SERIOUS INJURIES
- II — REQUIRE MEDICAL SUPPLIES
- X — UNABLE TO PROCEED
- F — REQUIRE FOOD AND WATER
- REQUIRE FIREARMS AND AMMUNITION
- REQUIRE MAP AND COMPASS
- REQUIRE SIGNAL LAMP WITH BATTERY AND RADIO
- L — REQUIRE FUEL AND OIL
- W — REQUIRE ENGINEER
- K — INDICATE DIRECTION TO PROCEED
- AM PROCEEDING IN THIS DIRECTION
- WILL ATTEMPT TAKE-OFF
- AIRCRAFT SERIOUSLY DAMAGED
- ALL WELL
- PROBABLY SAFE TO LAND HERE
- N — NO
- Y — YES
- NOT UNDERSTOOD

GROUND SEARCH PARTIES

OPERATION IS ENDED; RETURN TO YOUR BASE	LLL
WE HAVE FOUND ALL PERSONNEL	LL
WE HAVE FOUND ONLY SOME PERSONNEL	+—+
WE ARE NOT ABLE TO CONTINUE, RETURNING TO BASE	XX
HAVE DIVIDED INTO TWO GROUPS, EACH PROCEEDING IN DIRECTION INDICATED	
INFORMATION RECEIVED THAT AIRCRAFT IS IN THIS DIRECTION	→ →
NOTHING FOUND, WILL CONTINUE SEARCH	NN

AIRCRAFT ACKNOWLEDGMENT

THE RESCUE PILOT WILL SIGNAL HIS ANSWER EITHER BY DROPPING A NOTE OR IN THE FOLLOWING MANNER

MESSAGE RECEIVED AND UNDERSTOOD
1. ROCKING FROM SIDE TO SIDE, OR
2. MAKING GREEN FLASHES ON SIGNALLING LAMP

AFFIRMATIVE (YES) ANSWER
DIPPING THE NOSE OF HIS PLANE

MESSAGE NOT UNDERSTOOD
1. MAKING A COMPLETE RIGHT-HAND CIRCUIT, OR
2. MAKING RED FLASHES ON SIGNALLING LAMP

NEGATIVE (NO) ANSWER
FISH TAILING HIS PLANE

PANEL SIGNALS

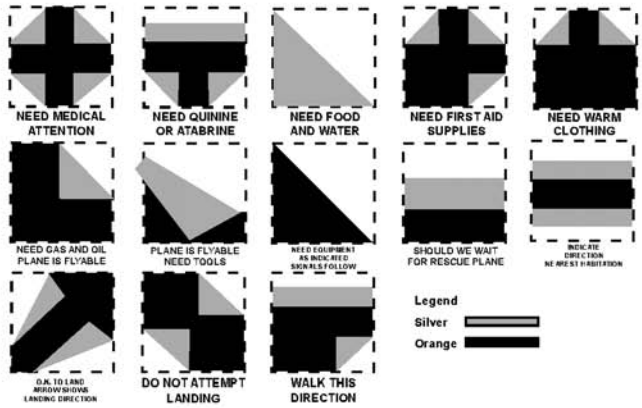

INSTRUCTIONS FOR THE TREATMENT OF WOUNDS

SUCKING CHEST WOUND

A CHEST WOUND THAT SUCKS AIR CAN BE FATAL UNLESS TREATED PROPERLY. MAKE A PRESSURE BANDAGE OVER THE OPENING AND ATTEMPT TO MAKE THE BANDAGE AS AIRTIGHT AS POSSIBLE WITH PLENTY OF ADHESIVE TAPE.

BURNS

A FIRST-DEGREE BURN IS JUST PAINFUL REDDENED SKIN, TAKE PAIN RELIEF MEDICATION AND KEEP THE AREA CLEAN. A SECOND-DEGREE BURN HAS BLISTERS IN ADDITION, THE TREATMENT IS THE SAME, BUT DO NOT BREAK THE BLISTERS UNLESS YOU MUST IN ORDER TO WALK. A THIRD-DEGREE BURN MAY BE WHITE AND PAINLESS. IT IS THE MOST SEVERE TYPE AND SHOULD BE COVERED WITH YOUR CLEANEST DRESSING.

BASIC WOUND CARD

(1) TREAT EVERY BREAK IN THE SKIN AS SOON AS POSSIBLE.
(2) RINSE DIRT AND FOREIGN MATTER AWAY WITH LOTS OF PURIFIED WATER.
(3) PUT YOUR CLEANEST DRESSING NEXT TO THE SURFACE OF THE WOUND.
(4) BANDAGE THE WOUND ENOUGH TO PREVENT FURTHER CONTAMINATION OR INJURY.
(5) AN INJURED PART WILL SWELL, CHECK FOR FEELING, PULSE, AND COLOR FREQUENTLY AFTER USING ANY BANDAGE THAT ENCIRCLES A LIMB TO AVOID A TOURNIQUET EFFECT.

EXHAUSTION

EVEN THE FITTEST INDIVIDUAL CAN EXHAUST HIMSELF IN A SEVERE ENVIRONMENT. CONSERVE YOUR ENERGY WHEN POSSIBLE. DRINK PLENTY OF WATER REST IN THE SHADE AND TAKE SALT TABLETS, IF AVAILABLE.

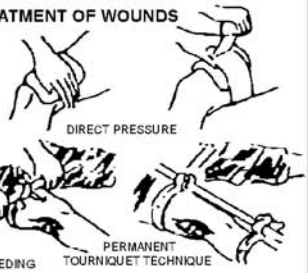

CONTROL BLEEDING BY DIRECT PRESSURE ON THE WOUND, USE OF PRESSURE POINTS, ELEVATING THE INJURED PART ABOVE THE LEVEL OF THE HEART, OR TOURNIQUET. USE TOURNIQUET ONLY WHEN ALL ELSE FAILS AND THE BLEEDING IS ARTERIAL (SPURTING BRIGHT RED BLOOD). ONCE APPLIED, DO NOT REMOVE THE TOURNIQUET UNTIL YOU CAN GET TO A DOCTOR, PLACE THE TOURNIQUET A FEW INCHES ABOVE THE WOUND IN THE DIRECTION OF THE HEART; TIGHTEN UNTIL ALL BLOOD FLOW STOPS AND NO PULSE IS FELT BELOW THE TOURNIQUET, AFTER SEVERAL HOURS, IF NO MEDICAL ATTENTION IS RECEIVED, GANGRENE WILL SET IN AND MUST BE ACCEPTED. IT IS POSSIBLE THAT THE PORTION OF THE LIMB BELOW THE TOURNIQUET WILL HAVE TO BE AMPUTATED, BUT AS LONG AS THE TOURNIQUET IS LEFT IN PLACE, ONE CAN GO FOR SEVERAL WEEKS WITH OUT THE GANGRENE SPREADING PAST THE TOURNIQUET AND CAUSING A FATALITY.

BEWARE OF APPLYING A TOURNIQUET WHEN YOU DO NOT INTEND TO DO SO. CHECK ANY LIMB WITH AN ENCIRCLING BANDAGE FREQUENTLY FOR PULSE, COLOR, & FEELING.

FRACTURES

USE BASIC WOUND CARE TO CLEAN AND DRESS ANY SKIN BREAKS. THEN IMMOBILIZE THE JOINT ABOVE AND THE JOINT BELOW THE FRACTURE SITE WITH A GOOD SPLINT OVER THE BANDAGE. CHECK THE LIMB FOR PULSE, FEELING, AND COLOR OFTEN SO THAT THE SWELLING LIMB DOES NOT MAKE THE BANDAGE TIGHT ENOUGH TO BECOME A TOURNIQUET.

BODY SIGNALS

NEED MEDICAL ASSISTANCE URGENT. LIE PRONE.

PICK US UP PLANE ABANDONED

LAND HERE. (POINT IN DIRECTION OF LANDING)

CAN PROCEED SHORTLY WAIT IF PRACTICABLE

ALL O.K. DO NOT WAIT

DO NOT ATTEMPT TO LAND HERE

NEED MECHANICAL HELP OR PARTS - LONG DELAY

USE DROP MESSAGE

AFFIRMATIVE (YES)

NEGATIVE (NO)

OUR RECEIVER IS OPERATING

009011

Figure 9-11. Ground/Air Emergency Code Card

Section 9-10. Magnetic Wrist Compass

9-77. DESCRIPTION.

9-78. The Magnetic Wrist Compass is primarily used for vectoring aircraft and navigational purposes.

9-79. CONFIGURATION.

9-80. The Magnetic Wrist Compass (NIIN 00-809-5252) is a magnetic compass attached to a buckling strap so that the compass may be fastened around the wrist (figure 9-12).

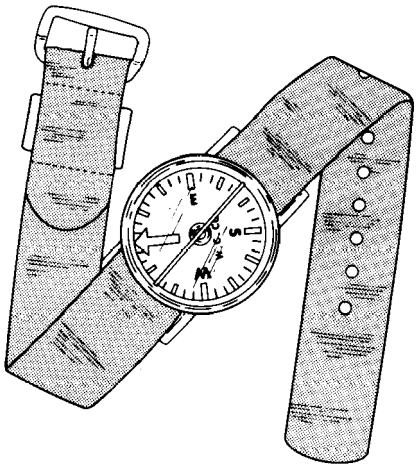

009012

Figure 9-12. Magnetic Wrist Compass

9-81. APPLICATION.

9-82. The Magnetic Wrist Compass, besides being used as a vectoring and navigational aid, can also be used to locate iron-base stones (lodestone). Striking flint, quartz, or sandstone with a lodestone can be used to start a fire.

9-83. MAINTENANCE.

9-84. Maintenance of the Magnetic Wrist Compass is limited to inspection.

9-85. INSPECTION. The Magnetic Wrist Compass shall be inspected upon issue and every 90 days thereafter, or at intervals to coincide with the inspection schedule of the kit or assembly in which the wrist compass is stored. To inspect the Magnetic Wrist Compass, proceed as follows:

1. Check for cracked case.
2. Inspect for broken indicator.
3. Inspect strap for cracks or tears.

Section 9-11. Landmark Type 27 Compass

9-86. DESCRIPTION.

9-87. The Landmark Type 27 Compass (P/N 800002, NIIN 01-444-2955) is a liquid filled precision compass. It includes a sighting mirror, clear protractor base plate, a sapphire jeweled bearing and a steel needle. The compass is 1 5/8 x 2 5/16 inches and weighs 1 ounce.

9-88. CONFIGURATION.

9-89. The Landmark Type 27 Compass is primarily a hand held compass encased in a clam shell type case to give it greater protection. A unique feature of the compass is that it can be pinned to the clothing to provide for hands-free use (figure 9-13).

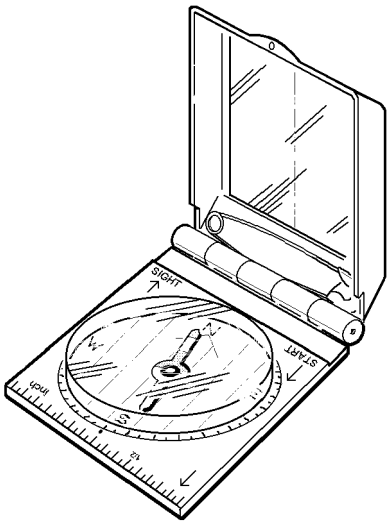

009013

Figure 9-13. Landmark Type 27 Compass

9-90. APPLICATION.

9-91. The Landmark Type 27 Compass is intended for the use of downed aircrew personnel and shall be stowed in the individual aircrewmember's survival vest. It is primarily for vectoring aircraft and navigational purposes. It can be used to take bearings from maps as well as line of sight. In addition to being a vectoring and navigational aid, the Type 27 compass can be used to locate iron-base stones (lodestone). Striking flint, quartz, or sandstone with a lodestone can be used to start a fire.

9-92. MAINTENANCE.

9-93. Maintenance of the SILVA Landmark Type 27 Compass is limited to inspection.

9-94. INSPECTION. Inspection of the SILVA Landmark Type 27 Compass shall consist of a Visual Inspection upon issue and every 90 days thereafter or at intervals to coincide with the inspection schedule of the kit or assembly in which it is stowed. To inspect the Landmark Type 27 Compass, proceed as follows:

1. Cracked case, sighting mirror, or protractor base plate.

2. Broken indicator needle.

Section 9-12. Lensatic Compass

9-95. DESCRIPTION.

9-96. The Lensatic Compass MIL-C-10436, (NIIN 01-196-6971) is an induction-damped, lensatic, unmounted, magnetic compass for individual use during day and night time.

9-97. CONFIGURATION.

9-98. The Lensatic Compass is constructed of cast aluminum and has an approximate luminous life of 10 years. It contains Tritium in glass vials, which provide for the self-illumination. Its climate capacity ranges from -50° to +150°F. Its size is approximately 2 in. x 2 in. x 1 in. It comes with a neck lanyard, carrying case and instruction card.

9-99. APPLICATION.

9-100. The Lensatic Compass is intended for the use of downed aircrew personnel and shall be stowed in the individual aircrewmember's survival vest. It is primarily for vectoring aircraft and navigational purposes. It can be used to take bearings from maps as well as line of sight. Refer to NAVAIR 13-1-6.7-1 for survival vest application.

9-101. MAINTENANCE.

9-102. Maintenance of the Lensatic Compass shall be performed by Organizational Level Maintenance or above and is limited to a Visual Inspection. Record all maintenance actions on appropriate form in accordance with COMNAVAIRFORINST 4790.2.

9-103. SPECIAL INSPECTION. Special inspection of the Lensatic Compass shall consist of a Visual Inspection upon issue and every 90-days thereafter or to coincide with the inspection cycle of the assembly in which it is installed. To inspect the Lensatic Compass, proceed as follows:

1. Inspect carrying case for tearing and wear. Replace carrying case as necessary. Order carrying case separately from the following source:

Cammenga Corp.
100 Aniline Avenue
Holland, MI 49424
www.cammenga.com
P/N LC-1 (pouch with keeper slide)

2. Inspect compass for overall condition and wear. Replace compass if damaged.

3. Inspect lanyard for wear. Replace as necessary using Type I nylon cord or equivalent.

4. Inspect illumination in dark room. Illumination has an approximate life of 10 years.

5. Attach Lensatic Compass to vest in accordance with NAVAIR 13-1-6.7-2.

Section 9-13. Nylon Cord

9-104. DESCRIPTION.

9-105. Nylon Cord (MIL-C-5040, Type I) is supplied in 50-foot lengths and has a breaking strength of 100 pounds. The primary function of the Nylon Cord is to attach survival items after removal from container (figure 9-14).

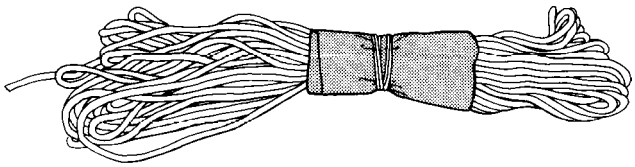

009014

Figure 9-14. Nylon Cord

9-106. APPLICATION.

9-107. In addition to attaching survival items, the Nylon Cord can be used to construct fish nets, or as a fishing line or snare, to secure straps, to tie down a windbreaker, to construct a bow or sling, to repair clothes or to construct a ladder.

9-108. MAINTENANCE.

9-109. Maintenance of Nylon Cord is limited to inspection.

9-110. INSPECTION. The Nylon Cord shall be inspected upon issue and every 90 days thereafter, or at intervals to coincide with the inspection schedule of the kit or liferaft in which the cord is stored. Inspect the Nylon Cord for signs of cuts and deterioration.

Section 9-14. Hoisting Gloves

9-111. DESCRIPTION.

9-112. Hoisting Gloves (MIL-G-2366) (figure 9-15) are heavy duty leather and are worn by hoist operators. Hoisting Gloves are used during hoist operations to protect the operator's hands from burns, chafing, or cuts caused while guiding the cable during hoist operations.

9-113. APPLICATION.

9-114. Hoisting Gloves are part of the Helicopter Rescue Equipment Bag (BGU-8/N and P/N 261), carried on SAR capable rotary wing aircraft.

9-115. MAINTENANCE.

9-116. Maintenance operations shall be performed by Organizational Level or above. All maintenance actions and inspections shall be recorded on appropriate form in accordance with COMNAVAIRFORINST 4790.2. Maintenance on Hoisting Gloves is limited to Special Inspection and replacement.

9-117. INSPECTION. All Hoisting Gloves shall be subjected to a Special Inspection.

9-118. Special Inspection. The Hoisting Gloves shall be inspected prior to placing in service and every 90 days thereafter. To perform a Special Inspection, proceed as follows:

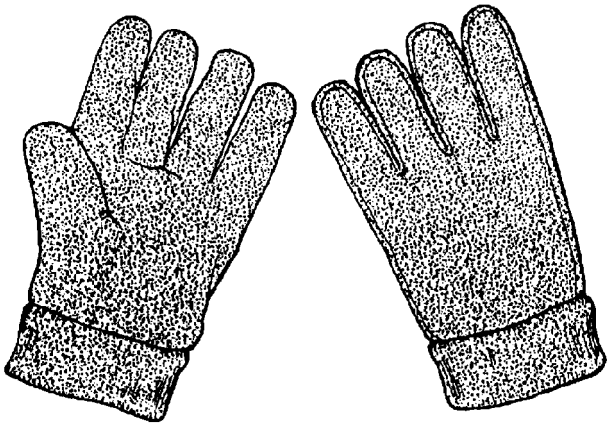

009015

Figure 9-15. Hoisting Gloves

NOTE

If any of the following conditions are found, the gloves shall be replaced.

1. Inspect for cuts, tears, fraying, and abrasions.

2. Inspect for cracks in the leather and excessive dryness.

3. Inspect for oil, fuel, or grease contamination.

4. Make necessary entries on appropriate forms in accordance with COMNAVAIRFORINST 4790.2.

Section 9-15. Dye Marker

9-119. DESCRIPTION.

9-120. The Dye Marker is used to attract attention of rescue aircraft. The dye is exhausted in 20 to 30 minutes and has a fluorescent green color which ceases to be a good target after an hour. It is visible at an approximate distance of 10 miles at 3,000 feet altitude.

9-121. CONFIGURATION.

9-122. The Dye Marker (MIL-S-17980, NIIN 00-270-9986) consists of a yellow, vinyl resin-coated cloth pouch with an attaching tape. The dye medium is contained within the pouch (figure 9-16).

9-123. APPLICATION.

9-124. The Dye Marker, deployed to attract attention of rescue aircraft, may be attached to a life preserver, clothing, or other equipment. The dye is activated by pulling the tab at the top of packet. If rapid dispersion of dye is desired, agitate the Dye Marker in the water.

9-125. MAINTENANCE.

9-126. Maintenance of the Dye Marker is limited to inspection.

9-127. INSPECTION. The Dye Marker shall be inspected upon issue and every 90 days thereafter, or at intervals to coincide with the inspection schedule of the kit or liferaft in which the Dye Marker is stored. To inspect the Dye Marker, proceed as follows:

NOTE

Vent opening allows pocket to breathe and expand during altitude changes.

1. Inspect packet for open seams or holes.
2. Inspect for signs of dye leakage.
3. Dye Marker contents my be hard or soft to the touch. Both are considered RFI.
4. Replace defective Dye Markers.

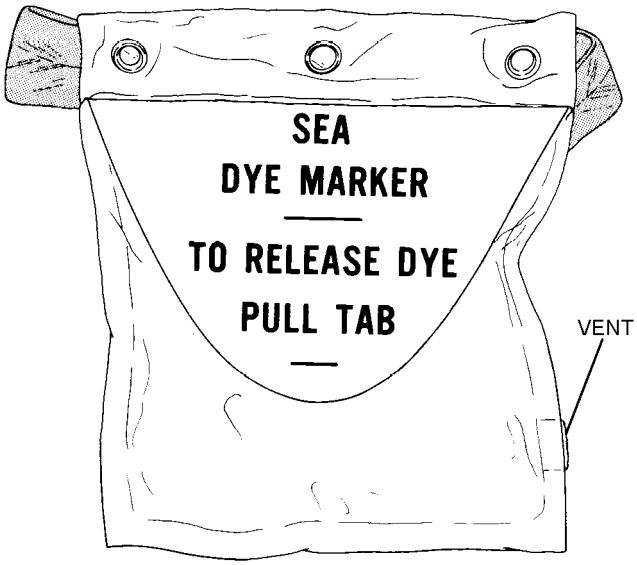

Figure 9-16. Dye Marker

Section 9-16. Medical First Aid Kits, General Purpose

9-128. DESCRIPTION.

9-129. Medical First Aid Kits provide first aid treatment of common injuries and illnesses encountered in an aviation survival environment. They are intended for emergency use only and not to supplant usual sources of routine medical care.

9-130. CONFIGURATION.

9-131. There are two types of Medical First Aid Kits, General Purpose: Aircraft Panel Mounted, NIIN 00-919-6650 (figure 9-17) and Rigid Case, for liferafts, NIIN 00-922-1200 (figure 9-18). The contents are labeled for easy access and placed in individual packages. The contents of each kit are listed in table 9-1.

9-132. APPLICATION.

9-133. Medical First Aid Kits are intended for use when medical assistance is required as a result of injury or infection.

9-134. MODIFICATION.

9-135. There are no authorized modifications to the Medical First Aid Kits at this time.

9-136. MAINTENANCE.

9-137. Maintenance or repair of the Medical First Aid Kits shall be performed by Organizational Level or above. All First Aid Kits are subject to Place-In-Service Inspections and Special inspections.

009017

Figure 9-17. First Aid Kit (Aircraft Panel Mounted)

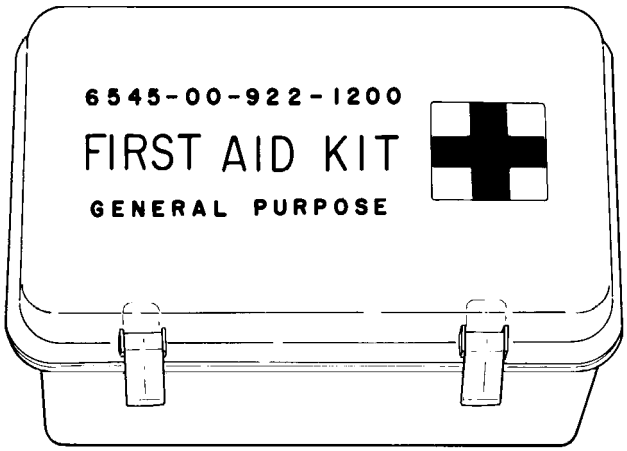

009018

Figure 9-18. First Aid Kit (Rigid Case)

9-138. INSPECTION. Inspections shall be performed prior to placing in service and at intervals to coincide with the equipment or aircraft in which the Medical First Aid Kit is installed. Record all inspections in accordance with COMNAVAIRFORINST 4790.2.

NOTE

Inspections of Medical First Aid Kits and the replacement of damaged, expired or deteriorated medical items shall be the responsibility of the Organizational and/or Intermediate level maintenance activities.

Dated medical items, with the exception of Quick-Clot, reaching their expiration date while the assembly is packed, can remain in service until the next inspection cycle of the equipment or aircraft in which it is installed. Quik-Clot, when installed, cannot expire during a repack cycle.

Medical items that have been re-called by NAVMEDLOGCOM messages will only be removed and replaced when directed by an Aircrew Systems Bulletin (ACB).

9-139. Place-In-Service and Special Inspections for Medical First Aid Kit, General Purpose, Panel-Mounted. Perform the place in service and special inspections as follows:

NOTE

Failure during any portion of a place-in-service inspection renders the Medical First Aid Kit non-RFI and shall be reported in accordance with COMNAVAIRFORINST 4790.2.

1. Inspect casing for rips, tears, contamination and proper operation of slide fastener.

2. Inspect contents for damaged, expired or deteriorated medical items. Record expiration date of dated materials on appropriate forms.

a. Optional items, Quick-Clot Hemostatic agent and Cinch Tight compression bandages are vacuum packed and shall be inspected to ensure vacuum seal is not broken. A broken seal shall render the item Non-RFI and it shall be replaced.

b. Quik-Clot has a shelf life of three years. Expiration date is stamped on the crimp of package. If no expiration date is visible or stamped on package, the item is considered Non-RFI and it shall be replaced.

c. Disposal of Quik-Clot.

(1) Tear or cut package open to break vacuum seal.

(2) Discard in trash.

d. Rearrangement of items in the panel mounted first aid kit will be necessary when incorporating optional items. Remove bulky items from the back pouch and relocate into front pouch. Place optional items into the back pouch. Quik-Clot, Cinch Tight and Tourni-Kwik, optional items, shall be kept together for ease of use when needed. Arrangement of other first aid items will be necessary to get a good fit.

3. Secure slide fastener as follows:

a. Close slider and place slider tab over locking ring and secure using an anti-pilferage seal, NIIN 01-242-0583 or equivalent. Cut off excess strap or wire.

b. If required locally, annotate the next special inspection due date on plastic tab of seal or on a separate tag with indelible ink.

NOTE

First Aid Kits which have broken seals or are suspected of being pilfered shall be re-inspected and re-sealed.

4. During Special Inspections, medical items found to be over age or damaged shall be replaced in accordance with Table 9-1. Medical cases found to be damaged shall be repaired or replaced as required.

THIS PAGE INTENTIONALLY LEFT BLANK.

Table 9-1. Medical First Aid Kits, General Purpose

Contents			Liferaft Rigid Case NIIN 00-922-1200	Aircraft Panel-Mounted NIIN 00-919-6650
Item	Size (Note 5)	NIIN		
Bandage/comp/camou	2 x 2	00-200-3075	1 PG	1 PG
Bandage Muslin Comp/Brown or Flesh	37 x 37 x 52 triangle	00-201-1755	1	1
Gauze, Petrolatum	3 x 36	01-112-6414	3	3
Blade, Surgical Straight/single edge	2 1/4 x 1/2	00-754-0426	1 PG	1 PG
Povidone-Iodine	(Note 2)	(Note 2)	1 or 10 (Note 2)	1 or 10 (Note 2)
Dressing, Field Camouflaged	4 x 7	00-159-4883	3	3
Bandage/gauze/comp camou/olive green	3 inches x 6 yd	00-200-3185	2	2
Adhesive tape, surgical	1 inch x 1 1/2 yd	01-060-1639	3	3
Bandage, adhesive, flesh	3/4 x 3	00-913-7909	18	18
First Aid Kit Eye Dressing	N/A	00-853-6309	1	1
Bandage, elastic	2 inches x 4 1/2 yd	00-935-5820	1	—
Scissors (blunt ends)	7 1/4	00-935-7138	1	—
Glove Exam/treatment	Large	01-364-8554	2 PR	2 PR
Bag, Plastic	4 inches x 6 inches	00-926-9041	1	—
Instruction sheet/card (Note 3)	N/A	N/A	1	2
Case Medical Instrument	N/A	00-113-3722	1	—
Case Medical Instrument	N/A	00-912-9860	—	1
Quick-Clot (Note 6,7)	3.5 oz	01-499-9285	—	1 EA
Cinch-Tight (Note 6,7)	8 x 10 pd	01-503-2109	—	2 EA
Tourni-Kwik (Note 6,7)	N/A	01-504-7030	—	1 EA

Table 9-1. Medical First Aid Kits, General Purpose (Continued)

Notes:
1. Suitable alternatives to non-dated medical items are authorized. Alternate items should not exceed the size requirements of current listed medical items to avoid bulkiness. A suitable alternative is defined as a like item in size and usage.
2. Either bottled 1/2 oz iodine (NIIN 01-523-2456) or pads (NIIN 01-010-0307) are acceptable. Rate of replacement for one 1/2 oz bottle of iodine is 10 iodine pads.
3. Aircraft Panel mounted first aid kit contains two instruction cards, one for artificial respiration and one for general first aid.
4. Ammonia Inhalants shall be removed from kits and discarded.
5. All sizes are in inches unless otherwise indicated.
6. These items are optional items that can be installed into the panel mounted first aid kit at the discretion of the command. Optional items are used in conjunction with each other and must all be incorporated when used.
7. Items may be commercially purchased when not available directly from supply. One source for commercial purchase is:
   Chinook Medical Gear, INC.
   Durango, CO
   970-375-1241
   800-766-1365
   FAX 970-375-6343
   www.chinookmed.com

9-140. Place-In-Service and Special Inspections for Medical First Aid Kit, General Purpose, Rigid Case for liferafts.

NOTE

Failure during any portion of a place-in-service inspection renders the Medical First Aid Kit non-RFI and shall be reported in accordance with COMNAVAIRFORINST 4790.2.

1. Inspect case for contamination, cracks and proper operation of latches.

2. Inspect contents for damaged, expired or deteriorated medical items. Record expiration date of dated materials on appropriate forms.

3. Open lid and drill one relief hole in lid of case, 1 inch from any lid edge using a #60 drill bit.

4. Using indelible ink mark the lid with the following: “Suitable for use with multiplace liferafts”.

5. Replace medical items as necessary during the special inspections.

Section 9-16A. Individual First Aid Kit (IFAK)

9-140A. DESCRIPTION.

9-140B. The IFAK provides first aid treatment of common injuries and has the capability to treat major injuries encountered in an aviation emergency survival environment. The IFAK is used for emergency use only and does not replace usual sources of routine medical care.

WARNING

Before installation in aircraft, aircrew personnel shall be trained on the use of the IFAK trauma components by qualified medical personnel and documented in NATOPS. Training for Marine Corps aircrew personnel shall be in accordance with USMC Training and Education Command (TECOM).

9-140C. CONFIGURATION.

9-140D. The IFAK is used to supplement the current panel mounted first aid kit, it is not a replacement. It shall be mounted to the aircraft in accordance with applicable technical directives. The IFAK (NIIN 01-539-2732) has two inserts:

1. A minor first aid kit (NIIN 01-539-2737) (Figure 9-18A), is a ziplock type bag containing: 10 each bandage, adhesive; 1 each dressing, burn; 1 each providone-iodine solution; 1 bottle water purification tablets; 2 each bandage, gauze triangular; 5 each bandage adhesive (2x4).

IFAK First Aid Kit

Figure 9-18A. IFAK Minor First Aid Kit Items

2. A trauma insert (NIIN 01-539-2740) (Figure 9-18B), is a vacuumed sealed pouch containing: 2 each bandage elastic (vacuumed sealed); 2 rolls bandage gauze (vacuumed sealed); 1 each tourniquet, one-handed; 1 each wound pack hemostatic treatment (quik-clot, vacuumed sealed).

Figure 9-18B. IFAK Trauma Kit Items

3. The inserts are contained in a single tan colored pouch (NIIN 01-539-2734). (Figure 9-18C)

IFAK (Front)

IFAK (Back)

Figure 9-18C. Individual First Aid Kit

9-140E. APPLICATION.

NOTE

IFAK's are authorized for both Navy/Marine Corps aircraft that currently carry the panel mounted first aid kit and have the approved platform specific technical directives for incorporation.

9-140F. The IFAK is currently fielded in designated Marine Corps helicopter aircraft as directed by COMNAVAIRLANT message DTG 202056Z Apr 04 and platform specific approved Technical Directives.

9-140G. MODIFICATION.

9-140H. There are no modifications authorized to the IFAK.

9-140I. MAINTENANCE.

9-140J. Maintenance or repair shall be accomplished at the organizational level. All IFAK's are subject to place-in-service and special inspections.

9-140K. INSPECTION.

9-140L. A place-in-service inspection shall be performed prior to placing in service and a special inspection shall be performed at intervals to coincide with the aircraft in which the IFAK is installed. All inspections shall be documented in accordance with COMNAVAIRFORINST 4790.2.

NOTE

Failure during any portion of the place-in-service inspection renders the IFAK non-RFI and shall be reported in accordance with COMNAVAIRFORINST 4790.2.

Refer to insert package labels for individual item quantites.

9-140M. Place-in-service inspection. Perform the place-in-service inspection as follows:

1. Inspect IFAK case for rips, tears, contamination, corrosion and operation of hardware.

2. Inspect minor first aid kit insert contents as follows:

a. Burn dressing. Inspect for leaks, damage and expiration date located on crimp.

b. Water purification tablets. Inspect in accordance with paragraph 9-152, step 3. Lot numbers on bottles are read as follows: (example: lot number 100411 is interpreted as expiring OCT/04). Do not use the last two digits of lot number.

c. Iodine. Inspect for leaks and expiration date.

d. Triangular bandage. Inspect outer wrapping for damage, contamination and corrosion to safety pins (if visible).

e. Bandage, adhesive. Inspect outer wrapping for damage and contamination.

f. Outer package. Inspect for damage, contamination, legibility of label, verify contents with label and ensure package slide-ziplock is in working condition. Verify that the expiration date on the outer package coincides with the earliest expiration date of the three dated items.

3. Inspect trauma insert as follows:

a. Inspect outer package for vacuum seal integrity, legibility of label, date of manufacture, and date of expiration.

NOTE

The date of expiration is the date the hemostatic wound agent (Quik-Clot) expires. The other components of the trauma kit insert do not have expiration dates.

4. Verify expiration dates.

5. Replace inserts in case and secure case latch.

9-140N. SPECIAL ATTENTION. Perform the special inspection at intervals to coincide with the aircraft in which the IFAK is installed.

CAUTION

Dated medical items, with the exception of Quik-Clot, reaching their expiration date while the assembly is packed, can remain in-service until the next inspection cycle of the aircraft in which it is installed. Quik-clot cannot expire during a repack cycle.

NOTE

Replacement of damaged, expired or deteriorated medical items shall be the responsibility of the organizational level activities.

Medical items recalled by NAVMEDLOGCOM messages will only be removed and replaced when directed by an Aircrew Systems Bulletin (ACB).

Refer to insert package labels for individual item quantities and purchasing information.

Earlier IFAK cases will have a fictitious NSN on the external label, (example 8105-09-000-2725), do not use this NSN for ordering the complete IFAK, use only the NIIN identified in paragraph 9-140D.

1. Inspect IFAK case (NIIN 01-539-2734) for rips, tears, contamination, corrosion and operation of hardware. Replace or repair as necessary. No more than four separate repairs are authorized per case.

2. Inspect minor first aid kit insert contents as follows:

a. Burn dressing (NIIN 01-0243-5894), inspect for leaks, damage and expiration date located on crimp. Verify expiration date with history card. Replace as necessary.

b. Water purification tablets (NIIN 00-985-7166), inspect in accordance with paragraph 9-152, step 3. Verify expiration date with history card. Replace as necessary. Lot numbers on bottles are read as follows: (example: lot number 100411 is translated as expiring Oct/04). Do not use the last two digits of lot number.

c. Iodine (P/N NDC00034-2100-02), is a 1/2 oz bottle. Verify expiration date with history card. Replace as necessary. The use of iodine pads, tubes or bottles are acceptable alternatives. Leaking iodine shall be replaced.

d. Triangular bandage (P/N 30029M), inspect outer wrapping for damage, contamination and corrosion to safety pins (if visible). Replace as necessary.

e. Bandages, adhesive (NIIN 01-514-4581) and (NIIN 00-913-7909), inspect outer wrapping for damage and contamination. Replace as necessary. Bandages are contained in one bag.

f. Outer package, inspect for damage, contamination, legibility of label. Verify contents with label. Ensure package slide/ziplock is in working condition. Replace as necessary.

g. Verify that the expiration date on the outer package coincides with the earliest expiration date of the three dated items.

3. Inspect trauma insert as follows:

a. Inspect outer package for vacuum seal integrity, legibility of label, date of manufacturer, and date of expiration. Verify expiration date with date on history card.

NOTE

The date of expiration is the date the hemostatic wound agent (Quik-Clot) expires.

The other components of the trauma kit insert do not have expiration dates.

(1) If integrity of vacuum seal on trauma insert package is broken, open package, neatly cut label off or transfer information to a piece of paper and seal in a recloseable plastic bag.

NOTE

Warning on label does not have to be transferred. It does not apply.

(2) Inspect Quik-Clot (NIIN 01-499-9285), Cinch-Tight (NIIN 01-503-2109) and compressed gauze (NIIN 01-503-2117), for individual vacuum seal. If vacuum seal is broken, the item must be replaced. These items are considered steril.

(3) Verify expiration (use by) date on Quik-Clot with expiration date on label. Change date on label as required.

(4) Inspect Tourni-kwik (NIIN 01-504-7030) outer wrapping for signs of damage. If damaged replace Tourni-kwik. This item is considered RFI whether it is vaccumed sealed or not.

4. Ensure all extra air is removed from minor first aid kit insert and place in front pouch of IFAK case.

5. Place vacuumed sealed trauma insert in the back pouch of the IFAK case. If storing individual components of the trauma insert, place the Quik-Clot and packaged label towards the back, place each of the Cinch-Tights on either side, place both compressed gauzes in the middle between the Cinch-Tights and place the Tourni-Kwik in an open space so it is secure.

6. Verify expiration dates.

7. Close the IFAK. IFAK is now ready for issue.

NOTE

IFAK's may be serialized in accordance with local procedures.

9-146. APPLICATION.

9-147. The SRU-31/P with its individual packets is intended for use by injured or downed personnel in emergency situations. With the individual items, aircraft personnel may sustain life and signal for rescue. For SRU-31/P application, refer to NAVAIR 13-1-6.7-1 or NAVAIR 13-1-6.3 Series manuals.

9-148. MODIFICATION.

9-149. There are no current directives affecting the Individual Aircrewmember's Survival Kit (SRU-31/P).

9-150. MAINTENANCE.

9-151. Maintenance shall be performed by organizational or intermediate level maintenance. Inspect the SRU-31/P in accordance with paragraph 9-152. Repair SRU-31/P in accordance with paragraph 9-153. Specific repairs and fabrications are listed in table 9-3.

NOTE

Failure of the SRU-31/P kit during place in service inspection renders the item non-RFI and shall be reported in accordance with COMNAVAIRFORINST 4790.2. Record all maintenance actions in accordance with COMNAVAIRFORINST 4790.2.

9-152. SPECIAL INSPECTION. The contents of the SRU-31/P Survival Kit shall be inspected upon issue and every 90 days thereafter or at intervals to coincide with inspection schedule of the assembly in which it is installed. Inspect the SRU-31/P as follows:

1. Inspect outer and inner carrying packets and packet bags for rips, tears, contamination, security of velcro tape.

WARNING

Fire Starter (P/N SP-102F) is a suspected source of spontaneous ignition through oxidation. The match should remain in its original sealed container (foil-wrapped) until ready for use. Do not stow after removal from package. Remove opened fire starter from service and disgard in a fireproof container.

2. Inspect each component for security of plastic outer bag, contamination, deterioration and leakage.

3. Inspect date on water purification tablets for expiration.

a. Water Purification Tablets, (Iodine). Expiration is 3 years from date of manufacturer, if no date of mfg is available, expiration shall be 3 years from date placed in service, or 1 year from the date the bottle was opened. Instructions for use are located on bottle. Replace as necessary.

b. Water Purification Tablets, (Chlor-Floc), may be used as an alternate to the iodine tablets. They are packaged in individual strips of ten and can be folded for compact stowage. Expiration date is 3 years from date of manufacturer, which is located on either the outside of original container or on the individual strips. Usage instructions shall be duplicated, folded and sealed with the tablets in a plastic bag before attachment to equipment. Inspect packaging for exposed or crushed tablets, replace as necessary.

NOTE

Water purification tablets reaching overage during a repack cycle may remain in service until the next inspection cycle of the equipment in which it is installed.

Water purification tablets will deteriorate rapidly when exposed to air. Perform only a visual inspection for security of packaging.

4. Arrange items on packing bag as compactly as possible using the velcro adhesive discs. Fold and secure velcro on packet bag and place it in the corresponding inner carrying packet and place inner carrying packet in corresponding outer packet. Secure all velcro closures and attach SRU-31/P to survival equipment in accordance with applicable manual.

9-153. REPAIR. Repair the SRU-31/P as follows:

NOTE

All stitches shall be type 301 lockstitch 7 to 10 stitches per inch. Backstitch a minimum of 3/4 inch. Unlimited repairs are authorized on packets until they are no longer repairable or serviceable.

1. Repair loose or missing hook and pile tape and broken stitches.

2. Stitching of all heat sealed seams on packets is authorized. Stitch a minimum of 1/4 inch from edges.

NOTE

The outer and inner carrying packets and packet bags cannot be purchased individually. A complete packet 1 (medical) or packet 2 (general) must be ordered.

3. Replace damage, contaminated and expired items as necessary.

4. Replace ripped, torn, or contaminated plastic bags on individual items as necessary.

9-154. ADDITION OF PROTECTIVE TUBE ON SUNSCREEN OINTMENT/INSECT REPELLENT. To add protective tubes on sunscreen ointment/insect repellent, proceed as follows:

NOTE

The use of the aluminum tubing is no longer required if using the plastic squeeze tubes or 0.3 oz packets. Aluminum tubing is still required for those SRU-31/P kits that may still have the older style (soft tube) sunscreen/insect repellant installed.

Materials Required

Quantity	Description	Reference Number
4 1/2 inches	Aluminum Tubing 2 1/2 x 0.065-Inch	WW-T-700/6 NIIN 00-278-7913
	or	
4 1/2 inches	Aluminum Tubing 1 1/8 x 0.065-Inch	WW-T-700/3 NIIN 00-279-0894

1. Cut one 4 1/2 inch of aluminum tubing.

2. Insert sunscreen ointment/insect repellent tube into 4 1/2-inch length of tubing.

3. Place two tabs of hook fastener tape (obtained from optional packet 1A or 1B) onto aluminum tubing to secure tube to medical packet bag.

Table 9-3. SRU-31/P Repairs and Fabrications

Description of Repairs or Fabrications	Application	Paragraph
Addition of Protective Tube on Sunscreen Ointment/Insect Repellent	All SRU-31/P Kits	9-154

Section 9-18. Individual Aircrewmember's Survival Kit (SRU-31A/P)

9-155. DESCRIPTION.

9-156. Individual Aircrewmember's Survival Kit SRU-31A/P (figure 9-21 and 9-22) contains selected survival items necessary to enhance the survival of downed aircrew personnel. The selection of the SRU-31A/P Individual Aircrewmember's Survival Kit will be at the discretion of the Type Commander depending on mission requirements.

NOTE

Contents of the SRU-31A/P shall be the responsibility of the Organizational and/or Intermediate level maintenance activities.

Dated medical items are no longer required to be part of the Individual Survival Kits. Imodium shall be removed from all Individual Survival Kits (SRU-31A/P) before placing in service or at the next inspection cycle of the equipment in which the Individual Survival Kit is installed.

Aircrewmembers may obtain medical items through their command Flight Surgeon or Corpsman. Addition of medical items shall be considered optional and will be installed into survival vests in the same manner as other optional items in accordance with NAVAIR 13-1-6.7-2. Replacements for dated medical items are the responsibility of the Aircrewmember or Aviation medical representative.

Components of the SRU-31A/P, which are not available through supply, may be obtained through open purchase.

Table 9-2. Individual Aircrewmember's Survival Kit, SRU-31/P

Item	Qty/Size	NIIN/Source	Current	Updated
Medical Kit - Packet 1A				
Instruction Card	1 Ea	Locally Reproduce	X	X
Soap, Toilet	1 Ea	00-551-0375	X	X
Bandage, Gauze	1 Ea (2 Inch X 6 Yds)	00-913-7906	X	X
Adhesive Tape, Surgical	1 Ea (1/2 Inch X 10 Yds)	01-221-1495	X	X
Compress Bandage, Camouflaged	1 Ea (4 X 4 Inches)	00-200-3080	X	X
Bandage Adhesive	6 Ea (3/4 Inches X 3 Inches)	00-913-7909	X	X
Sunscreen And Insect Repellent (Sunsect) (Note 1)	3 Ea (0.3 fl oz Packets)	01-452-9582	X	X
Water Purification Tablets (Iodine)	1 Bt (50 Tabs)	00-985-7166	X	X
or				
Water Purification Tablets (Chlorine)	1 Strip (10 Tablets)	01-352-6129	X	X
Water Receptacle	1 Ea		X	
Lipstick, Antichap	1 Tube	01-436-0607		X
Skin Closures, Adhesive Surgical	12 Ea (1/4 Inch X 3 Inch)	00-913-5874		X
Rescue/Signal, Medical Instruction Panel (Note 2)	1 Ea	Locally Reproduce		X
Adhesive Tape Surgical, Moleskin	1 Ea (4 X 5 Inches)	00-203-6010		X
Burn Cream (Note 3)	2 Ea (1/8 oz (3.5g))	Blistex		X

Table 9-2. Individual Aircrewmember's Survival Kit, SRU-31/P (Cont)

Item	Qty/Size	NIIN/Source	Current	Updated
General Kit - Packet 2A				
Instruction Card	1 Ea	Locally Reproduce	X	X
Fire Starter (Note 4)	1 Ea	Mfg Product (P/N SP-102F) or 01-160-5618	X	X
Wrist Compass	1 Ea	01-326-1654 or 00-809-5252	X	X
Water Bag	1 Ea (1 Qt)	Mfg Product (P/N SP-31) or 01-452-4193	X	X
Razor, Surgical	1 Ea	01-363-1212	X	X
Fishing Kit	1 Set	01-181-3154		X
Face Paint, Camouflage (Note 5)	2 Tubes (Black and Brown)	Mfg Product (P/N CSM-625)		X
or				
Paint, Face Camouflage	1 Ea (Compact)	01-262-0635		
Saw Flexible	1 Ea	00-296-2529		X
Tourniquet (Note 6)	1 Ea	00-383-0565		X
Signal Panel Blanket W/Inst.	1 Ea	00-935-6667	X	
Flash Guard	1 Ea		X	
Mirror	1 Ea	00-105-1252	X	
Charms, Energets, Chiclets	1 Pk (Ea)		X	
Nodoz (Note 8)	10 Tabs		X	
Mosquito Headnet and Mittens	1 Set	01-192-2357	X	
Tweezers and Pins	1 Set		X	

Notes
1. Sunscreen does not have an expiration date.
2. Refer to figure 9-11 for duplication.
3. Burn cream is optional. No expiration date.
4. SRU-31/P kit is considered RFI without the presence of fire starter.
5. Camouflage paint, P/N CSM-625, may be purchased from: Hally Caller, 443 Wells Rd, Doylestown, PA 18901, 215-345-6354. Request colors when ordering.
6. If required, the tourniquet shall be modified in accordance with paragraph 9-159, step 6. Tourniquets without usage instructions printed or sewn on the webbing shall be repackaged with a copy of the ground/air emergency code card, figure 9-11.
7. All SRU-31/P kits currently in service or SRU-31/P kits received from supply that are not updated, may be placed into service and/or can remain in service until they are no longer serviceable. Items in the current SRU-31/P that will no longer be part of the new SRU-31/P kits may be removed at command discretion and the updated items added. Items not available through supply may be obtained through open purchase. Items shall be similar in size and usage.
8. Nodoz, when incorporated, is an authorized substitute for Charms, Energets, and Chiclets. Nodoz may be removed without any replacement.

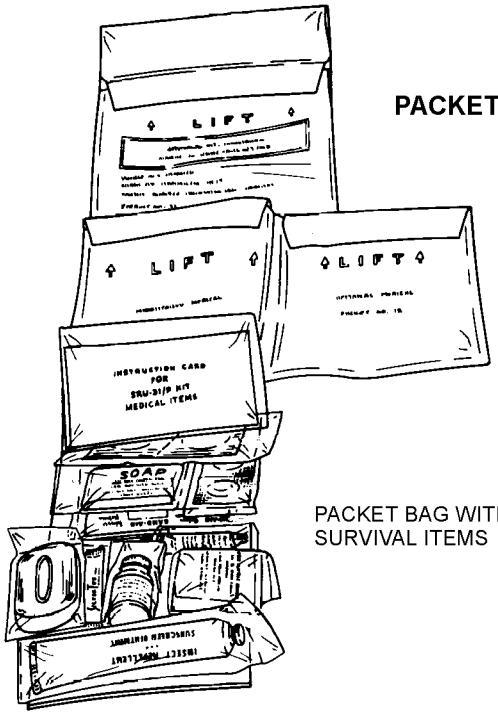

009019

Figure 9-19. Individual Aircrewmember's Survival Kit, SRU-31/P (Current Configuration)

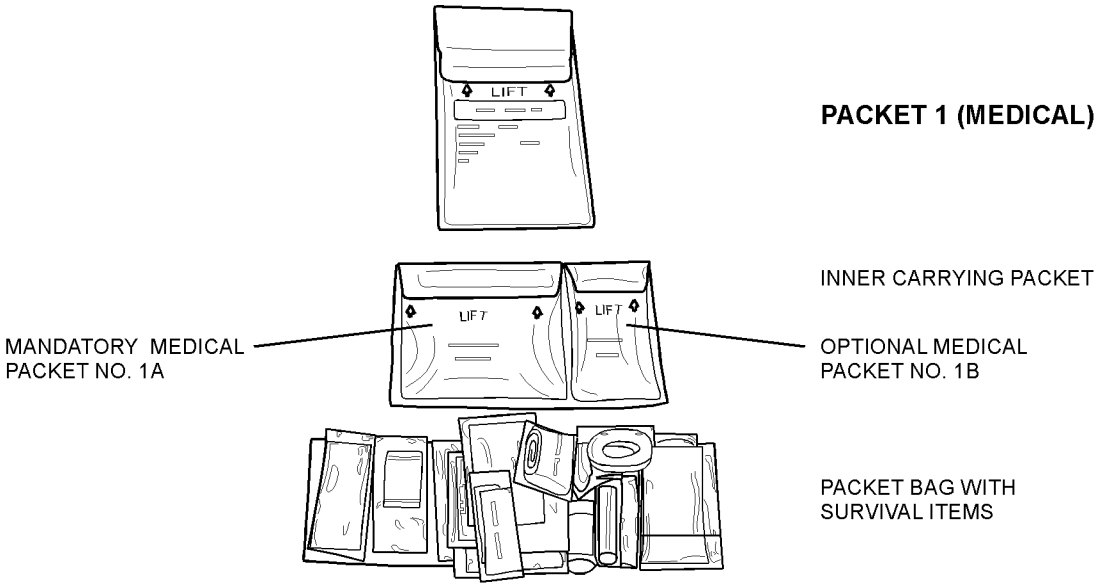

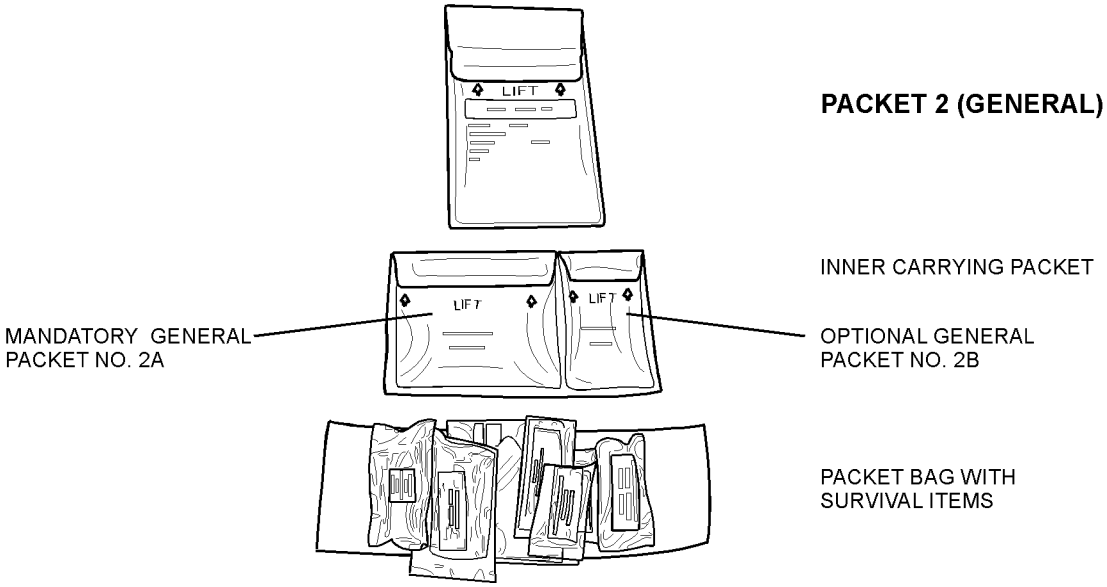

009020

Figure 9-20. Individual Aircrewmember's Survival Kit, SRU-31/P (New Configuration)

9-146. APPLICATION.

9-147. The SRU-31/P with its individual packets is intended for use by injured or downed personnel in emergency situations. With the individual items, aircraft personnel may sustain life and signal for rescue. For SRU-31/P application, refer to NAVAIR 13-1-6.7-1 or NAVAIR 13-1-6.3 Series manuals.

9-148. MODIFICATION.

9-149. There are no current directives affecting the Individual Aircrewmember's Survival Kit (SRU-31/P).

9-150. MAINTENANCE.

9-151. Maintenance shall be performed by organizational or intermediate level maintenance. Inspect the SRU-31/P in accordance with paragraph 9-152. Repair SRU-31/P in accordance with paragraph 9-153. Specific repairs and fabrications are listed in table 9-3.

NOTE

Failure of the SRU-31/P kit during place in service inspection renders the item non-RFI and shall be reported in accordance with COMNAVAIRFORINST 4790.2. Record all maintenance actions in accordance with COMNAVAIRFORINST 4790.2.

9-152. SPECIAL INSPECTION. The contents of the SRU-31/P Survival Kit shall be inspected upon issue and every 90 days thereafter or at intervals to coincide with inspection schedule of the assembly in which it is installed. Inspect the SRU-31/P as follows:

1. Inspect outer and inner carrying packets and packet bags for rips, tears, contamination, security of velcro tape.

WARNING

Fire Starter (P/N SP-102F) is a suspected source of spontaneous ignition through oxidation. The match should remain in its original sealed container (foil-wrapped) until ready for use. Do not stow after removal from package. Remove opened fire starter from service and disgard in a fireproof container.

2. Inspect each component for security of plastic outer bag, contamination, deterioration and leakage.

3. Inspect date on water purification tablets for expiration.

a. Water Purification Tablets, (Iodine). Expiration is 3 years from date of manufacturer, if no date of mfg is available, expiration shall be 3 years from date placed in service, or 1 year from the date the bottle was opened. Instructions for use are located on bottle. Replace as necessary.

b. Water Purification Tablets, (Chlor-Floc), may be used as an alternate to the iodine tablets. They are packaged in individual strips of ten and can be folded for compact stowage. Expiration date is 3 years from date of manufacturer, which is located on either the outside of original container or on the individual strips. Usage instructions shall be duplicated, folded and sealed with the tablets in a plastic bag before attachment to equipment. Inspect packaging for exposed or crushed tablets, replace as necessary.

NOTE

Water purification tablets reaching overage during a repack cycle may remain in service until the next inspection cycle of the equipment in which it is installed.

Water purification tablets will deteriorate rapidly when exposed to air. Perform only a visual inspection for security of packaging.

4. Arrange items on packing bag as compactly as possible using the velcro adhesive discs. Fold and secure velcro on packet bag and place it in the corresponding inner carrying packet and place inner carrying packet in corresponding outer packet. Secure all velcro closures and attach SRU-31/P to survival equipment in accordance with applicable manual.

9-153. REPAIR. Repair the SRU-31/P as follows:

NOTE

All stitches shall be type 301 lockstitch 7 to 10 stitches per inch. Backstitch a minimum of 3/4 inch. Unlimited repairs are authorized on packets until they are no longer repairable or serviceable.

1. Repair loose or missing hook and pile tape and broken stitches.

2. Stitching of all heat sealed seams on packets is authorized. Stitch a minimum of 1/4 inch from edges.

NOTE

The outer and inner carrying packets and packet bags cannot be purchased individually. A complete packet 1 (medical) or packet 2 (general) must be ordered.

3. Replace damage, contaminated and expired items as necessary.

4. Replace ripped, torn, or contaminated plastic bags on individual items as necessary.

9-154. ADDITION OF PROTECTIVE TUBE ON SUNSCREEN OINTMENT/INSECT REPELLENT. To add protective tubes on sunscreen ointment/insect repellent, proceed as follows:

NOTE

The use of the aluminum tubing is no longer required if using the plastic squeeze tubes or 0.3 oz packets. Aluminum tubing is still required for those SRU-31/P kits that may still have the older style (soft tube) sunscreen/insect repellant installed.

Materials Required

Quantity	Description	Reference Number
4 1/2 inches	Aluminum Tubing 2 1/2 x 0.065-Inch	WW-T-700/6 NIIN 00-278-7913
	or	
4 1/2 inches	Aluminum Tubing 1 1/8 x 0.065-Inch	WW-T-700/3 NIIN 00-279-0894

1. Cut one 4 1/2 inch of aluminum tubing.

2. Insert sunscreen ointment/insect repellent tube into 4 1/2-inch length of tubing.

3. Place two tabs of hook fastener tape (obtained from optional packet 1A or 1B) onto aluminum tubing to secure tube to medical packet bag.

Table 9-3. SRU-31/P Repairs and Fabrications

Description of Repairs or Fabrications	Application	Paragraph
Addition of Protective Tube on Sunscreen Ointment/Insect Repellent	All SRU-31/P Kits	9-154

Section 9-18. Individual Aircrewmember's Survival Kit (SRU-31A/P)

9-155. DESCRIPTION.

9-156. Individual Aircrewmember's Survival Kit SRU-31A/P (figure 9-21 and 9-22) contains selected survival items necessary to enhance the survival of downed aircrew personnel. The selection of the SRU-31A/P Individual Aircrewmember's Survival Kit will be at the discretion of the Type Commander depending on mission requirements.

NOTE

Contents of the SRU-31A/P shall be the responsibility of the Organizational and/or Intermediate level maintenance activities.

Dated medical items are no longer required to be part of the Individual Survival Kits. Imodium shall be removed from all Individual Survival Kits (SRU-31A/P) before placing in service or at the next inspection cycle of the equipment in which the Individual Survival Kit is installed.

Aircrewmembers may obtain medical items through their command Flight Surgeon or Corpsman. Addition of medical items shall be considered optional and will be installed into survival vests in the same manner as other optional items in accordance with NAVAIR 13-1-6.7-2. Replacements for dated medical items are the responsibility of the Aircrewmember or Aviation medical representative.

Components of the SRU-31A/P, which are not available through supply, may be obtained through open purchase.

9-157. CONFIGURATION.

9-158. Individual Aircrewmember's Survival Kit SRU-31A/P shall be locally manufactured. Refer to paragraph 9-169 for manufacturing of SRU-31A/P pouch. Refer to paragraph 9-159 for list of required items. Items shall be packed as compactly as possible.

NOTE

The use of the SRU-31/P medical or general pouch is an optional means for packaging the items. Refer to paragraph 9-168 for re-designation.

9-159. The basic SRU-31A/P shall contain the following items.

NOTE

Soap, tourniquet, water purification tablets (chlorine strip tablets), adhesive tape, sterile pad and the 0.3 oz and 2 oz Sunsect shall be sealed in a re-closeable plastic bag (NIIN 00-837-7753) 4 x 4 inch or equivalent. Bags may be cut and heat-sealed for smaller items.

1. Soap, Toilet (NIIN-00-551-0375 or local purchase), 3/4 oz wrapped. Inspect for contamination and deterioration. Place soap in a re-closeable plastic bag. Replace as necessary.

2. Sunsect (NIIN 01-452-9582) 0.3 oz packet is authorized for use. Inspect for leakage and replace as necessary. There is no expiration date for insect repellant and sunscreen.

NOTE

Rate of replacement is four 0.3 oz packets of Sunsect to either the 2 oz plastic squeeze tube or the two 1 oz plastic bottles of insect repellant and sunscreen.

3. Water Purification Tablets. Water purification tablets shall be added to the SRU-31A/P kit at time of place in service or at the next inspection cycle. The use of either Iodine or Chlorine tablets is authorized. Refer to paragraph 9-152, step 3 and table 9-2 for inspection and ordering information.

4. Adhesive Tape, Surgical (NIIN 01-221-1495 or local purchase) (1/2 inch x 10 yards). Inspect for contamination and deterioration. Place adhesive tape in a re-closeable plastic bag. Replace as necessary.

5. Sterile Pad, non-adherent, 3 each, (NIIN 00-111-0708 or local purchase) (3 x 4 inch). Inspect for contamination and deterioration. Place sterile pad in a re-closeable plastic bag. Replace as necessary.

WARNING

The tourniquet is intended only for emergency use when the injured person is alone and there is life-threatening arterial bleeding. Unnecessary use of a tourniquet could result in more serious complications of injury.

6. Tourniquet (NIIN 00-383-0565). The 1 1/2 x 42-inch tourniquet is configured so it can be applied with one hand to restrict flow of blood to an injured area. The tourniquet is prepared for one hand application. Inspect for contamination and deterioration. Replace as necessary. Prior to installing tourniquet in SRU-31/P or SRU-31A/P, perform the following:

NOTE

Tourniquets without usage instructions printed or sewn on the webbing shall be repackaged with a copy of the ground/air emergency code card, figure 9-11.

a. Remove tourniquet from package and unfold.

b. Lay tourniquet on flat surface with buckle facing you.

c. Carefully remove instruction label by cutting attaching threads.

d. Sew label on tourniquet with short and long sides parallel to edges, and within 1 inch, of free end of tourniquet.

e. Insert free end of tourniquet through buckle going from bottom to top.

f. Refold tourniquet along original fold lines.

g. Place tourniquet in a re-closeable plastic bag.

7. Pocket Knife (NIIN 00-162-2205). The pocket knife is a stainless steel general purpose survival tool. It has a blade, can opener, bottle opener, screw driver, and leather punch.

8. Fire Starter Aviation Survival Spark-lite (NIIN 01-233-0061) or Fire Starting Tool Magnesium (NIIN 01-160-5618) can be used. Both fire starters come with instructions for use. Inspect Fire Starter for corrosion, broken casing, contamination, deterioration and legibility of instructions. Replace as necessary.

9. Pocket Chain Saw (Optional). There are two styles of stainless steel pocket chain saws. Each measures approximately 16 to 24 inches in length. The stainless steel 3-strand style (P/N 550046) is pre-packaged and can be folded for a more compact fit. Stainless steel pocket chain saw (NIIN 00-296-2529) comes wrapped in cardboard and plastic. Pocket chain saw P/N 550046 can be purchased from the following source:

Exploration Products
3924 Irongate Rd Suite C
Bellingham, WA 98226
800-448-7312
P/N550046

9-160. APPLICATION.

9-161. The SRU-31A/P survival kit is intended for use by injured or downed personnel in emergency situations. With the individual items, aircraft personnel may sustain life.

9-162. MODIFICATION.

9-163. There are no current directives affecting the SRU-31A/P survival kit.

9-164. MAINTENANCE.

9-165. Maintenance or repair of the SRU-31A/P survival kit shall be performed by Organizational Level or above. Maintenance consists of inspection of kit, and repair of torn hook and pile fastener tapes on kit. Repair and fabrication instructions are listed in table 9-4.

9-166. INSPECTION. The contents of the SRU-31A/P Survival Kit shall be inspected upon issue and every 90 days thereafter or at an interval to coincide with inspection schedule of the assembly in which it is stowed. Inspect contents of SRU-31A/P for general condition and replace as necessary, unless otherwise indicated.

9-167. REPAIR OF TORN HOOK AND PILE FASTENER TAPES ON SRU-31A/P KIT. Repair torn, ripped or broken stitches on equipment container by stitching in place, using nylon thread (V-T-295, Type II, Class A, Size E). Torn, ripped or contaminated material is cause for replacement of equipment container.

9-168. RE-DESIGNATION OF SRU-31/P POUCH. To re-designate the SRU-31/P pouch to the SRU-31A/P, proceed as follows:

Materials Required

Quantity	Description	Reference Number
As Required	Ink Pen, Black Indelible	N/A

1. On the interior pouch, mark out the words, Mandatory Medical or General and Optional Medical or General on both pockets, and re-mark it as SRU-31A/P.

2. On the exterior pouch, mark out the lines of information located below the words “Survival Kit, Individual Airman’s” on either the Medical or General pouch and re-mark it with “SRU-31A/P” and “Date of Assembly”.

9-169. FABRICATION OF SRU-31A/P EQUIPMENT CONTAINER. (Figures 9-21 and 9-22). To fabricate the equipment container for the SRU-31A/P Individual Survival Kit, proceed as follows:

Materials Required

Quantity	Description	Reference Number
15 1/2 x 17 1/2 inches	Cloth, Vinyl Coated Nylon, Type II, Green	MIL-C-43006 NIIN 00-351-8346
16 1/2 inches	Pile, Tape 4 Inch Width Green	MIL-F-21840 NIIN 01-187-7774
	or	
	Pile, Tape 2 Inch Width Green	MIL-F-21840 NIIN 00-405-2265
5 1/2 inches	Pile Tape, 1 Inch Width, Green	MIL-F-21840 NIIN 00-106-5974
5 1/2 inches	Hook Tape, 1 Inch Width, Green	MIL-F-21840 NIIN 00-106-5973
5 1/2 inches	Hook Tape, 2 Inch Width, Green	MIL-F-21840 NIIN 00-450-9837
12 inches	Tape, Textile Nylon, Type III, Green	MIL-T-5038 NIIN 00-753-6144
1	Grommet, Size 00	MS20230B20 NIIN 00-291-0302
As Required	Thread, Nylon, Size E, Green	V-T-295 NIIN 00-204-3884
As Required	Hook Tape, 1 Inch, Self-adhesive	190959 NIIN 01-445-8812 or Equivalent

Table 9-4. SRU-31A/P Repairs and Fabrications

Description of Repairs or Fabrications	Application	Paragraph
Repair of Torn Hook and Pile Fastener Tapes on SRU-31A/P Kit	All SRU-31A/P Kits	9-167
Re-designation of SRU-31/P Pouch	All applicable SRU-31/P Pouches	9-168
Fabrication of SRU-31A/P equipment container	As required	9-169

NOTE

All stitches shall be Type 301 Lockstitch 7 to 10 stitches per inch. Backstitch a minimum of 3/4 inch.

1. Measure and cut one piece of coated nylon fabric, 15 1/2 x 17 1/2 inches. Place cloth on table with the 17 1/2 inch sides at the top and bottom.

2. From the bottom of fabric, measure and mark 6 1/4 inches up from each corner. Using a straight edge, connect marks making a horizontal line. On the horizontal line measure and mark 5 1/2 inches inboard from each side.

3. From the top corners of fabric, measure and mark 5 1/2 inches inboard. Connect each set of 5 1/2 inch marks, making two parallel vertical lines perpendicular to the horizontal line.

4. Cut fabric on these lines, forming an upside down "T" shaped piece of material (figure 9-21). Trim each outside 90 degree corner 3/8 inch to form an angled corner. Cut a 3/8-inch slit at the two inside 90-degree angles. Turn all edges inboard 3/8 inches and sew in place using 1 row of stitches 1/4 inch from folded edge.

5. INSIDE OF CONTAINER. (Figure 9-21)

a. Position fabric with folded hems facing up and the 16 3/4 inch side at bottom forming an upside-down "T".

b. Measure and mark the center position of both the left side 5 1/2 edge and the top 5 1/2 inch edge. Cut two pieces of Type III nylon tape 6 inches long. Sear ends. Fold tape in half forming a "V" loop. Place each loop on the marked centers with ends 1/2 inch in from folded edge. Sew tape in place with three rows of stitching.

c. Position fabric as stated in step 5a. Cut a 16 1/2-inch piece of 4-inch wide pile tape. Lay pile tape on the bottom portion of the upside-down "T" centering it from all edges and sew in place 1/8 inch from pile edges.

NOTE

Two pieces of 2-inch x 16 1/2-inch pile tapes may be used in lieu of the 4-inch pile tape. Sew the two pieces together to form a 4-inch x 16 1/2 inch single piece. Dimensions may be slightly smaller after sewing together.

d. Cut one 5 1/2 inch piece of 1 inch pile tape. Position pile tape along the top 5 1/2 inch folded edge of upside-down "T" and sew in place 1/8 inch from pile edges.

6. OUTSIDE OF CONTAINER. (Figure 9-22)

a. Position fabric so hem and pile tape are facing down and the 16 3/4 inch side is at the bottom forming an upside-down "T".

b. Cut one 5 1/2 x 1 inch piece of hook tape. Position hook tape along the left 5 1/2 inch folded edge and sew in place 1/8 inch from hook edge.

c. Cut one 5 1/2 x 2 inch piece of hook tape. Position the 2-inch piece of hook tape horizontally and center it along the bottom edge of the 16 3/4 inch side. Sew hook tape in place 1/8 inch in from hook edge.

d. Measure and mark a point centered and 1/2 inch up from bottom edge of the 2-inch piece of hook tape. Punch cut a 1/8-inch hole and set grommet for tie in point.

e. Measure down approximately 4 inches from the top 5 1/2 inch side. Stencil or mark with indelible black ink the following information. Let ink dry completely before stowing items.

SRU-31A/P
Date of mfg:
Water Purification Exp Date:

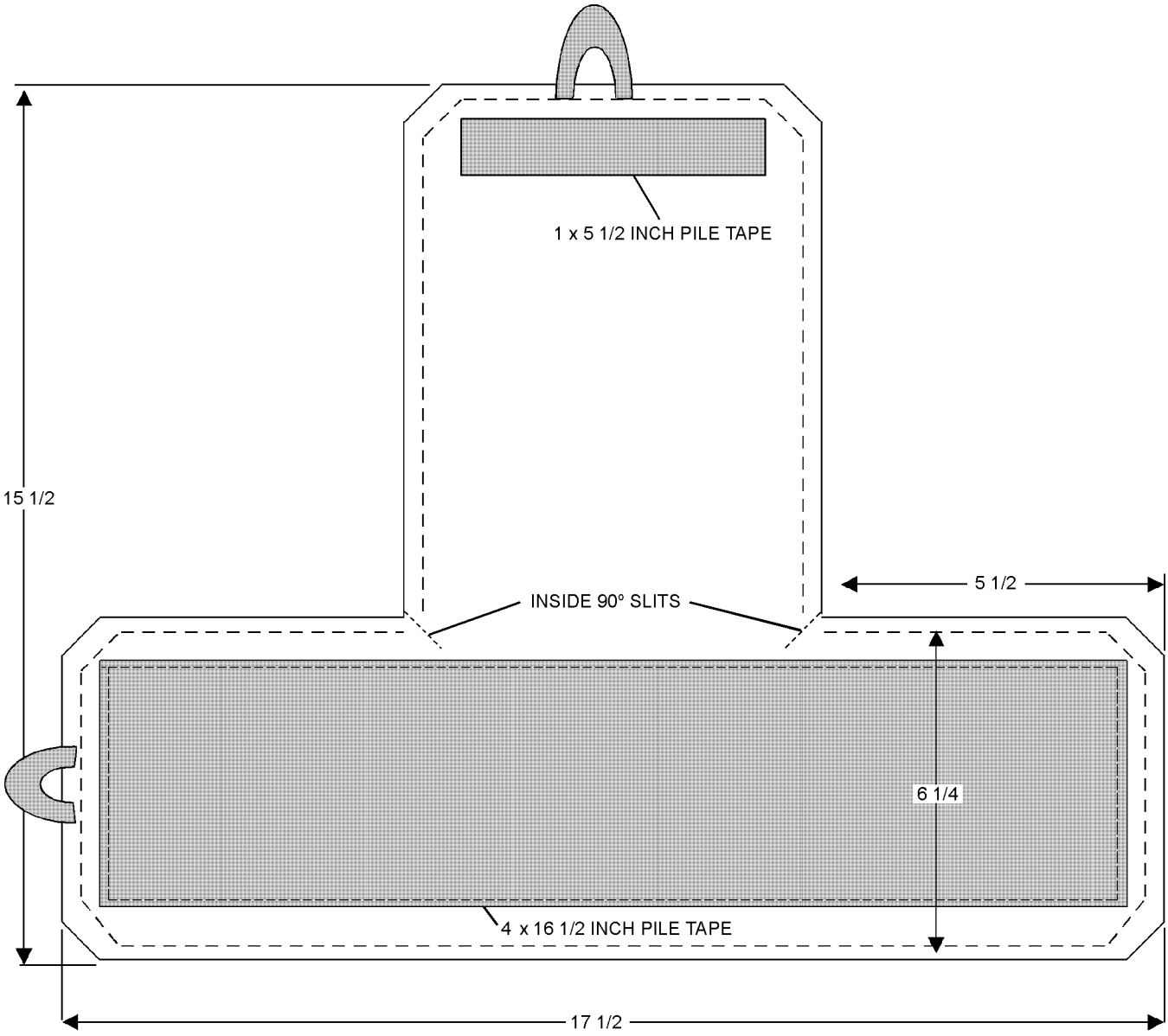

009021

Figure 9-21. Fabrication of SRU-31A/P Equipment Container (Inside of Container)

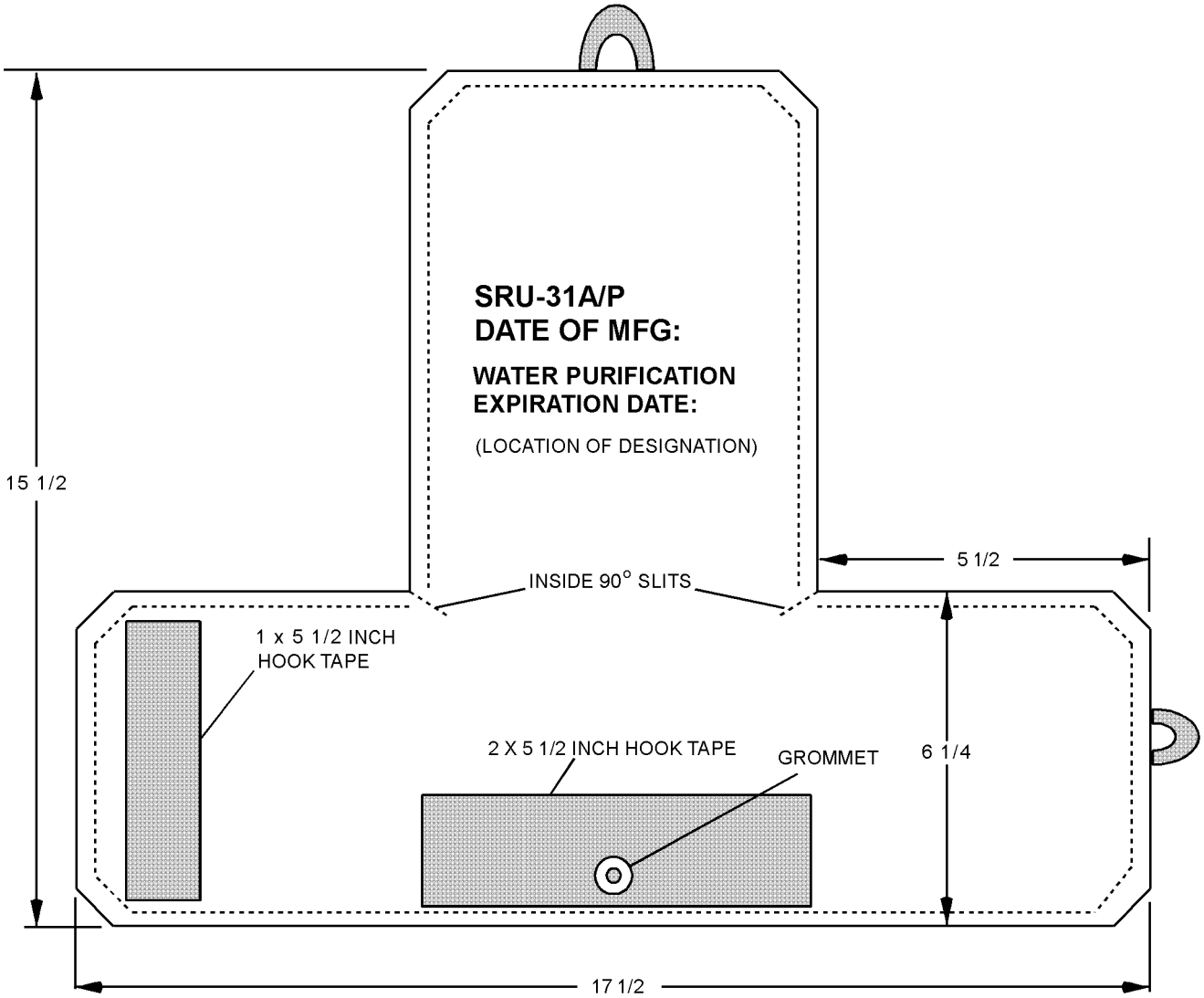

009022

Figure 9-22. Fabrication of SRU-31A/P Equipment Container (Outside of Container)

9-170. PACKING OF SURVIVAL ITEMS.

1. Ensure survival items have been inspected and are packaged in accordance with paragraph 9-159.

2. Using a 6 x 6 inch re-closeable plastic bag (NIIN 00-837-7754), arrange survival items in plastic bag, squeeze bag to remove majority of air and close bag.

3. Cut two pieces of 1-inch self-adhesive hook tape approximately 3 inches in length or one 3-inch piece of 2-inch self-adhesive hook tape. Attach hook tape to one side of the 6 x 6 plastic bag and secure to the center of the 4-inch pile tape on the container.

4. Cut a 48-inch piece of Type I nylon cord (MIL-C-5040), sear ends and tie an overhand knot at one end and secure to grommet with a bowline knot.

5. Fold the right flap of the container over survival items, fold left flap over right flap and secure velcro. Fold top down and over, secure velcro.

6. Attach SRU-31A/P to survival equipment in accordance with applicable manual.

Section 9-19. Pocket Knife

9-171. DESCRIPTION.

9-172. The Pocket Knife is a general purpose survival tool which has many uses.

9-173. CONFIGURATION.

9-174. The Pocket Knife (MIL-K-818C, NIIN 00-162-2205) is made of stainless steel and consists of one blade, can opener, bottle opener, screwdriver, and leather punch blade (figure 9-23).

9-175. APPLICATION.

9-176. The Pocket Knife is intended to aid aircraft personnel in cutting wood or material and opening cans and bottles to prepare food. It is also used as a screwdriver, an awl, and as a weapon, if necessary.

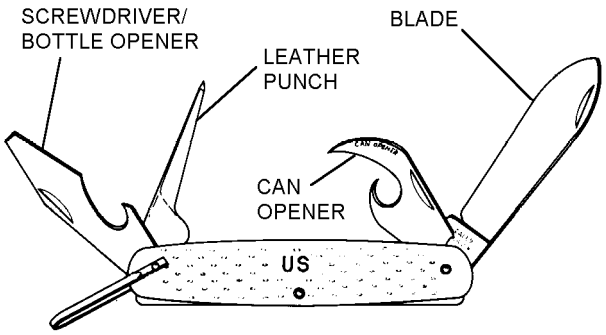

009023

Figure 9-23. Pocket Knife

9-177. MAINTENANCE.

9-178. Maintenance of the Pocket Knife is limited to inspection and sharpening.

WARNING

Use caution when inspecting Pocket Knife to avoid injury and cuts.

9-179. INSPECTION. The Pocket Knife shall be inspected upon issue and every 90 days thereafter, or at intervals to coincide with the inspection schedule of the kit or assembly in which the Pocket Knife is stored.

1. Inspect the Pocket Knife for damage to blades.

2. Inspect blades for sharpness. Sharpen in accordance with paragraph 9-180, if necessary.

9-180. SHARPENING. Sharpen with a whetstone if necessary. Refer to paragraph 9-224.

Section 9-20. Hook Blade Knife

9-181. DESCRIPTION.

9-182. The Hook Blade Knife is used to cut entangled parachute suspension lines. The knife shall be stowed in a protective pocket when not in use.

9-183. CONFIGURATION.

9-184. The Hook Blade Knife (823AS101-1, CAGE 30003) is 6 inches long with the Hook Blade at one end and a plastic grip at the other end (figure 9-24).

9-185. APPLICATION.

9-186. The Hook Blade Knife is intended for cutting parachute suspension lines which may be entangled in trees or other obstacles.

9-187. MAINTENANCE.

9-188. Maintenance to the Hook Blade Knife is limited to inspection and sharpening.

9-189. INSPECTION. The Hook Blade Knife shall be inspected upon issue and every 90 days thereafter, or at intervals to coincide with the inspection schedule of the kit or assembly in which the Hook Blade Knife is stored. To inspect the Hook Blade Knife, proceed as follows:

1. (Original Issue) Remove plastic shipping cover and discard. Inspect blade for sharpness by making two cuts through Type III suspension line. Cuts shall be made by hooking a loop of the suspension line on the blade near the handle and sharply pulling against the line with the blade edge. Cuts shall be clean with a minimum of fraying. Hook Blade Knife failing this test shall be sharpened in accordance with paragraph 9-190.

2. (Routine Inspection Interval) Inspect knife blade for damage and corrosion. Inspect handle and pocket for obvious defects.

9-190. SHARPENING. Sharpen Hook Blade Knife blade with a whetstone to a razor edge (if necessary, refer to paragraph 9-224).

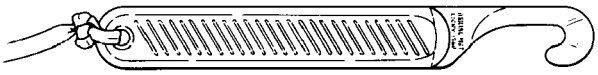

009024

Figure 9-24. Hook Blade Knife

Section 9-21. Double Bladed Shroud Line Cutter

9-191. DESCRIPTION.

9-192. The Double Bladed Shroud Line Cutter (figure 9-25) is used to cut entangled parachute suspension lines. The line cutter is authorized as an alternative to the hook blade knife. The 8-inch line cutter requires modification before use. It shall be stowed in the same pocket as the hook blade knife.

009025

Figure 9-25. Double Bladed Shroud Line Cutter

NOTE

The double bladed shroud line cutter cannot be used with the HBU-11/P, HBU-23/P or the TRISAR harness assembly.

9-193. CONFIGURATION.

9-194. The double bladed shroud line cutter is constructed of a durable yellow plastic and has a hook at one end with two stainless steel blade inserts. The knife is an alternative to the Hook Blade Knife P/N 823AS100-1 currently used in survival vests. The 8-inch Jack the Ripper P/N K16909, NIIN 01-390-4903 requires modification before use. Refer to paragraph 9-197. Both P/N K15550, NIIN 01-526-2051 and K2003 do not require modification. P/N K2003 and replacement blades P/N K16912 are available from the following source:

PARA-GEAR Equipment Co.
3839 W. Oakton St.
Skokie, IL 60076-3438
(800) 323-0437
P/N K2003 (Aero Jack)
P/N K16912 (replacement blades for both P/N K15550 and K2003)

9-195. APPLICATION.

9-196. The double bladed shroud line cutter is intended for cutting parachute suspension lines that may be entangled in trees or other obstacles.

9-197. MODIFICATION.

9-198. Double bladed shroud line cutter shall be modified by shortening the handle and by the addition of lanyard hole. Shroud line cutter must be modified to fit into existing hook blade knife pockets. Overall finished length shall not exceed 6 7/8 inches.

Materials Required

Quantity	Description	Reference Number
1	Drill	—
1	Hacksaw	—
1	1/16-inch Drill Bit	—
1	11/64-inch Drill Bit	—
1	1/4-inch Drill Bit	—
1	File or Sandpaper	—

WARNING

Knife blades are sharp. Use care when handling and storing.

1. Remove screw at bottom of handle and remove spare blades. Retain blades for future use. Replace bottom screw.

2. Mark handle 1 1/4 inches from bottom of handle.

3. Using a hacksaw or appropriate cutting device, cut off the 1 1/4 inches from bottom of handle. Smooth cut edges with sandpaper or file. Remove and retain the small phillips screw from the removed end for future use.

4. Mark a point 3/4 inches from cut bottom of handle and 3/8 inch in from blade side of knife. Drill completely through handle using 1/16-inch drill bit. Countersink the 1/16-inch hole with an 11/64-inch drill bit. Countersink should be on same side as existing screw heads. Reinstall the small phillips screw.

5. Lanyard Hole. Mark a point 3/8 inch from cut bottom of handle and centered in middle of handle. Drill completely through using 1/4-inch drill bit. Smooth edges with sandpaper or file.

9-199. MAINTENANCE.

9-200. Maintenance shall consist of inspection and replacement of blades and shall be performed at organizational level or above.

9-201. SPECIAL INSPECTION. The double bladed shroud line cutter shall be inspected upon issue and every 90 days thereafter, or at intervals to coincide with the inspection schedule of the kit or assembly in which it is installed. To inspect the double bladed shroud line cutter, proceed as follows:

THIS PAGE INTENTIONALLY LEFT BLANK.

NOTE

Report any discrepancies in accordance with COMNAVAIRFORINST 4790.2 for information purposes only.

1. (Place-In-Service Inspection only) Inspect blades for sharpness by making two cuts through Type III suspension line. Cuts shall be made by hooking a loop of the suspension line on the blade near the handle and sharply pulling against the line with the blade edge. Cuts shall be clean with a minimum of fraying. Double bladed shroud line cutter failing this test shall be returned to original supplier for replacement.

2. Inspect line cutter handle and blades for damage and corrosion. Replace blades as necessary in accordance with paragraph 9-202.

WARNING

Knife blades are sharp. Use care when handling and storing.

9-202. BLADE REPLACEMENT. Remove the 5 phillips head screws holding together the two halves of the double bladed shroud line cutter. Carefully remove damaged/corroded blades and replace with new blades. Replace the 5 phillips head screws.

Section 9-22. Hook and Snap Blade Knife Type MC-1

WARNING

This knife may be issued only to Armed Forces and is intended solely for use in emergency survival conditions. Unauthorized possession of this knife may constitute a serious criminal offense against Federal, State, and Local laws.

9-203. DESCRIPTION.

9-204. The Hook and Snap Blade Knife Type MC-1 is used in emergency survival conditions. This includes its application as a hook blade as described in paragraph 9-186.

9-205. CONFIGURATION.

9-206. The Hook and Snap Blade Knife Type MC-1 (CAM-2534) consists of a hook blade on one end and a snap blade on the other end. The snap blade is actuated by a release button and held in place with a slide lock (figure 9-26). The knife is available from the following source:

One Stop Knife Shop
340 Production Ct
Louisville, KY 40299
(866) 289-1757
www.onestopknifeshop.com

9-207. APPLICATION.

9-208. The Hook and Snap Blade Knife Type MC-1 is intended for use as a hook blade for quick cutting of parachute suspension lines. The snap blade knife may be used to cut wood or material, or as a weapon. The knife is authorized for use in the PCU Series Torso Harness.

9-209. MAINTENANCE.

9-210. Maintenance of the Hook and Snap Blade Knife Type MC-1 is limited to inspection and sharpening.

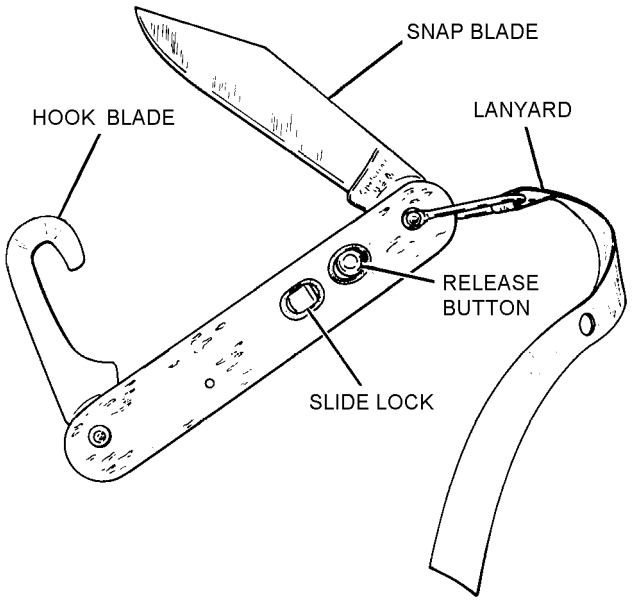

Figure 9-26. Hook and Snap Blade Knife, Type MC-1

9-211. INSPECTION. The Hook and Snap Blade Knife shall be inspected upon issue and every 90 days thereafter, or at intervals to coincide with the inspection schedule of the kit or assembly in which the Hook and Snap Blade Knife is stored. To inspect the Hook and Snap Blade Knife, proceed as follows:

WARNING

Use extreme care when inspecting knife to avoid injury and cuts. For service use, to avoid accidental opening of knife, wrap knife with a minimum of two turns 3/4-inch wide cloth tape (Ordnance Tape, PPP-T-60). Fold tape at end to form 1-inch tab for easy removal.

1. Visually inspect knife body and blades for damage and corrosion.

2. Upon opening blade, inspect that blade remains in open position.

3. Ensure that slide lock is held in both open and safe position.

4. With the slide lock in open position, operate snap blade. Snap blade shall remain in open position.

5. With the snap blade closed and the slide lock in the safety position, snap blade shall remain closed when release button is pressed or moved.

6. When snap blade is released and slide lock is in safety position, snap blade shall remain open when release button is pressed or moved.

7. Visually inspect webbing lanyard for fraying and security of attachment. If required, replace lanyard IAW ACC 380.

8. Inspect hook blade for sharpness by making two cuts through Type III suspension line. Cuts shall be made by hooking loop of line on blade near handle and giving a sharp pull against line with blade edge. Cuts shall be clean with a minimum of fraying. Hook blade failing test shall be sharpened in accordance with paragraph 9-212.

9. Inspect snap blade for sharpness.

9-212. SHARPENING. Sharpen blades with a whetstone to a razor edge. Refer to paragraph 9-224.

Section 9-23. Survival Knife and Sheath

9-213. DESCRIPTION.

9-214. The Survival Knife is a survival tool with various uses and should be kept clean, sharp, and stowed in its sheath when not in use.

9-215. CONFIGURATION.

9-216. The Survival Knife (MIL-K-8662) is a hunting knife with a 5-inch steel blade. One side of the blade is honed while the other side is serrated. The grip is made of leather washers 1/8-inch thick, layered in a row up to the guard. At the end of the grip there is a steel butt. The sheath is constructed of leather with a pocket to carry the sharpening stone. There is a metal tip on the sheath to protect from injury (figure 9-27).

9-217. APPLICATION.

9-218. The Survival Knife is the most valuable general purpose survival tool. It can be used for cutting wood and material, opening cans, and as a hunting knife or weapon. At all times the survival knife should be kept clean, sharpened, and returned to the sheath when not in use.

9-219. MODIFICATION.

9-220. There are no current directives affecting the Survival Knife and Sheath. Repair or other actions required shall be performed by Intermediate Level or above.

9-221. MAINTENANCE.

9-222. Maintenance of the Survival Knife and Sheath shall be performed by Organizational Level or above unless otherwise specified. Maintenance of the survival knife and sheath is limited to inspection and sharpening.

9-223. INSPECTION. The Survival Knife and Sheath shall be inspected upon issue and every 90 days thereafter, or at intervals to coincide with the inspection schedule of the kit or assembly in which the Survival Knife and Sheath are stored. To inspect the Survival Knife and Sheath, proceed as follows:

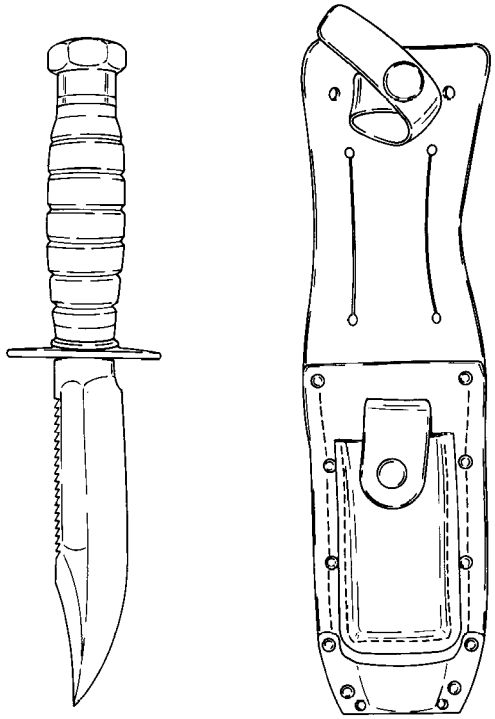

009027

Figure 9-27. Survival Knife and Sheath

1. Visually inspect knife blade for damage and corrosion.

2. Visually inspect sheath for cuts and loose or broken stitching.

9-224. SHARPENING. To sharpen the Survival Knife blade, proceed as follows:

Materials Required

Quantity	Description	Reference Number
1	Whetstone, Type I	SS-S-736
As Required	Lubricating Oil, General Purpose	VV-L-800 NIIN 00-273-2389
As Required	Cloth, Cleaning	MIL-C-85043

1. Prepare whetstone by placing a few drops of oil on it.

2. Hold the blade so that the back of the blade is about 20° up from the surface of the stone.

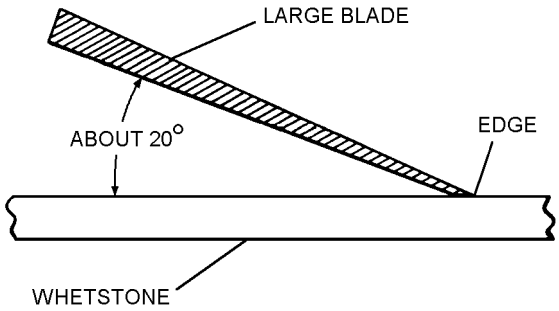

09224002

Step 2 - Para 9-224

3. Use a circular motion and press lightly on the blade.

4. Turn the blade over and repeat step 3.

5. Wipe blade with linen cloth.

Section 9-24. Leatherman Wave Survival Tool

9-225. DESCRIPTION.

9-226. The Leatherman Wave Survival Tool features a multitude of uses. The design offers two locking blades with one handed access and handle comfort. When not in use, the tool shall be kept in its sheath. Refer to NAVAIR 13-1-6.7-1 for authorized configuration applications and NAVAIR 13-1-6.7-4 for stowage procedures.

9-227. CONFIGURATION.

9-228. The Leatherman Wave Survival Tool (NIIN 01-456-0578) is a multi-purpose tool and comes with a leather sheath. It is manufactured from high-grade 100% stainless steel and is corrosion resistant. It is 4 inches in length when closed, 6 1/4 inches when open, and weighs 8 oz. It features needle nose and regular pliers, wire cutters, hard-wire cutters, clip-point knife, diamond-coated file, wood saw, scissors, extra small, small, medium, large screwdrivers and phillips screwdriver, can/bottle opener, wire stripper and lanyard attachment.

9-229. APPLICATION.

9-230. The Survival Tool can be used for repairing, cutting, opening, sawing, hunting and as a weapon. The Survival Tool should be kept clean, blades sharpened, and kept in its sheath when not in use.

9-231. MODIFICATION.

9-232. There are no directives affecting the Survival Tool and sheath.

9-233. MAINTENANCE.

9-234. Maintenance shall be performed at Organizational Level or above. Maintenance is limited to an inspection, oiling and sharpening.

9-235. INSPECTION. The Survival Tool shall be inspected upon issue and every 90 days thereafter or at intervals to coincide with the inspection schedule of the equipment in which the survival tool is stored. To inspect the Survival Tool proceed as follows:

Materials Required

Quantity	Description	Reference Number
As Required	Lubricating Oil, General Purpose	VV-L-800 NIIN 00-273-2389
As Required	Cloth, Cleaning	MIL-C-85043

CAUTION

Blades are sharp. Use caution when inspecting and cleaning.

1. Inspect knife blades for damage. If necessary, sharpen in accordance with paragraph 9-224.

2. Visually inspect all individual tools for wear, corrosion and ease of operation at pivoting points.

3. Wipe each tool with cleaning cloth and lightly lubricate each pivoting point.

4. Visually inspect sheath for broken stitches and overall condition.

5. Replace tool and sheath as necessary.

NOTE

Replacement Leatherman tools and sheaths can be ordered separately by open purchase from the following source:

Leatherman Tool Group, Inc.
P.O. Box 20595
Portland, Oregon 97294-0595
(800) 847-8665
mktg@leatherman.com

Section 9-25. Emergency Signaling Mirror

9-236. DESCRIPTION.

9-237. The Emergency Signaling Mirror is a signaling device used to attract attention of a passing ship or aircraft.

9-238. CONFIGURATION.

NOTE

The 3 x 5-inch mirror (USAF41063TYPE B1) shall be used until the supply is expended. The 2 x 3-inch mirror (MIL-M-18371) shall be used thereafter.

9-239. The Emergency Signaling Mirror is either 2 x 3 inches (MIL-M-18371) or 3 x 5 inches (USAF41063 TYPE B1). There is a hole in the corner of the mirror through which a lanyard shall pass for attachment to the individual aircrewmember's survival vest (figure 9-28).

NOTE

Interchangeable use of either the glass 2 x 3 inch (MIL-M-18371) or 3 x 5 inch (USAF41063 TYPE B1) Emergency Signaling Mirror or the acrylic Mark 4 Signaling Mirror (NIIN 00-105-1252) is authorized.

Mirror replacement does not affect mirror contained inside the SRU-31/P individual aircrewmember's survival kit at this time.

9-240. APPLICATION.

9-241. The Emergency Signaling Mirror is intended to reflect sunlight at passing ships, aircraft, or rescue parties. Instructions for using mirrors are printed on the back of the mirror.

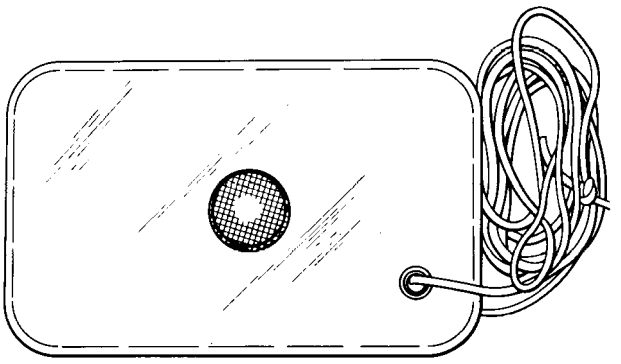

009028

Figure 9-28. Emergency Signaling Mirror

9-242. MAINTENANCE.

9-243. Maintenance of the Emergency Signaling Mirror is limited to inspection.

9-244. INSPECTION. The Emergency Signaling Mirror shall be inspected upon issue and every 90 days thereafter, or at intervals to coincide with the inspection schedule of the kit or assembly in which the signaling mirror is stored. To inspect the Emergency Signaling Mirror, proceed as follows:

1. Ensure mirror is not cracked or broken.

2. Ensure operating instructions are legible.

3. Ensure mirror surface is clean and unmarred.

NOTE

Mirrors failing inspection shall be replaced.

4. Ensure lanyard is not cut, worn, or frayed, and is securely attached to mirror. Replace lanyards as necessary.

Section 9-26. Mark 4 Emergency Signaling Mirror

9-245. DESCRIPTION.

9-246. The Mark 4 Emergency Signaling Mirror (NIIN 00-105-1252) (figure 9-29) is made of durable acrylic plastic. There is a sighting hole in the center and a hole in one corner for an attached lanyard. The Mark 4 Emergency Signaling Mirror will be used in addition to the mirrors currently in use.

9-247. CONFIGURATION.

9-248. The Mark 4 Emergency Signaling Mirror is available in only one configuration. It measures 2 x 3 inches and weighs 0.75 of an ounce. There is a hole in the corner of the mirror through which a lanyard shall pass for attachment to the individual aircrewmember's survival vest.

9-249. APPLICATION.

9-250 The Mark 4 Emergency Signaling Mirror is intended for use by downed aircrewmembers as an aid to search and rescue operations. Instructions for mirror's use are printed on back of mirror.

NOTE

The plastic material of the mirror, when shaved from its edges, can be used as tinder to help start fire.

9-251. MAINTENANCE.

9-252. Maintenance of the Mark 4 Emergency Signaling Mirror is limited to inspection.

9-253. INSPECTION. The Mark 4 Emergency Signaling Mirror shall be inspected upon issue and every 90 days thereafter or at intervals to coincide with inspection schedule of kit or assembly in which it is stowed. The inspection shall consist of the following:

1. Check mirror for cracks, breaks, and other defects.

2. Ensure instructions on back of mirror are legible.

3. Ensure mirror surface is clean and unmarred.

NOTE

Mirrors failing inspection shall be replaced.

4. Ensure lanyard is not cut, worn, or frayed, and is securely attached to mirror. Replace lanyards as necessary.

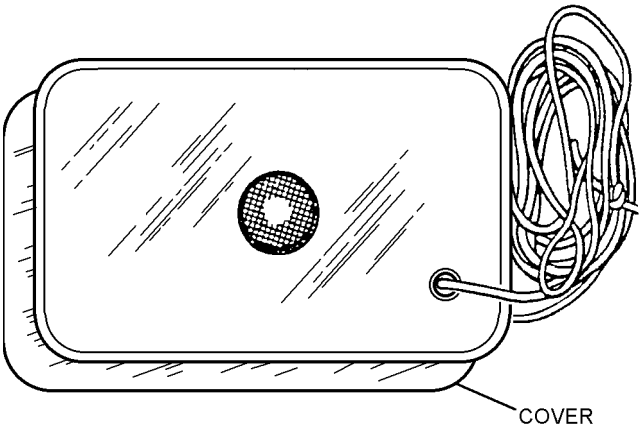

009029

Figure 9-29. Mark 4 Emergency Signaling Mirror

Section 9-27. Sunscreen

9-254. DESCRIPTION.

9-255. Sunscreen (NIIN 01-121-2336) or equivalent 4 oz bottle is used to prevent sunburn and drying of skin. Sunsect 0.3 oz packets (NIIN 01-452-9582) are an authorized substitute for bottled sunscreen.

NOTE

Rate of replacement for a 4 oz bottle of sunscreen is sixteen 0.3 oz Sunsect packets.

9-256. CONFIGURATION.

9-257. A 4 oz bottle of sunscreen can come in different shaped bottles and may or may not be wrapped in plastic.

9-258. APPLICATION.

9-259. The 4 oz bottle of sunscreen and/or the 0.3 oz Sunsect is packed in survival equipment in accordance with the related NA 13 series manual.

9-260. MAINTENANCE.

9-261. Maintenance of the sunscreen is limited to a visual inspection.

9-262. INSPECTION. The Sunscreen shall be inspected upon issue and every 90 days thereafter, or at intervals to coincide with the inspection schedule of the kit or assembly in which the sunscreen is stored.

1. Inspect for signs leaking. If leaking, discard.

2. Damaged exterior plastic wrap, when installed, can be removed and replaced with a plastic bag.

3. Inspect for expiration date if applicable.

NOTE

Sunscreen can expire during a repack. Remove and replace at next inspection cycle. If sunscreen does not have an expiration date it can remain in service until it is no longer serviceable.

4. Sunscreen shall be enclosed in a plastic bag if plastic wrapping is not installed.

009030

Figure 9-30. General Configuration

Section 9-28. Fire Starter

9-263. DESCRIPTION.

9-264. The Fire Starter (NIIN 01-233-0061) (figure 9-31) consists of a friction wheel assembly with flint, and "Tinder-Quick" fire tabs. Those items plus spare flint and "Tinder-Quick" are supplied in a plastic container with a flip top that measures 1 9/16 x 5/8 x 2 1/2 inches.

9-265. APPLICATION.

9-266. Gather tinder (dry wood shavings, paper, grass, leaves, cloth, or bark) and prepare other campfire materials in the usual manner. Feather the "Tinder-Quick" fire tabs apart before using. Avoid touching or matting the inner fibers as the fluffed fibers ignite faster. Hold friction wheel with the arrow or indentation pointing up, and the index finger on the friction wheel. Spin the friction wheel rapidly over "Tinder-Quick" tabs to ignite with resulting sparks.

9-267. MAINTENANCE.

9-268. Maintenance of Fire Starter is limited to a visual inspection.

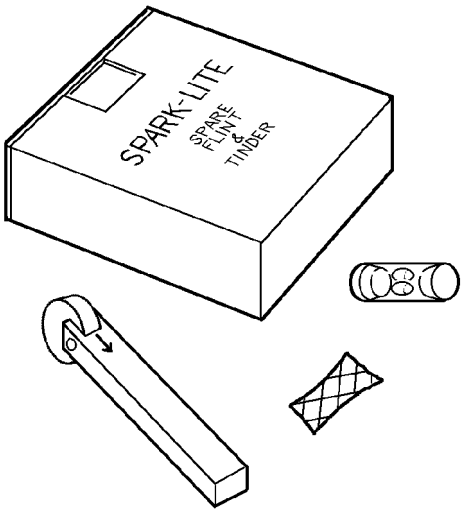

009031

Figure 9-31. Fire Starter

9-269. INSPECTION. The Fire Starter shall be inspected upon issue and every 90 days thereafter or at intervals to coincide with the inspection schedule of the kit in which the Fire Starter is stored. Inspect the Fire Starter container for security and to ensure the contents are encased within.

Section 9-29. Pocket Chain Saw

9-270. DESCRIPTION.

9-271. The Pocket Chain Saw (P/N 550044) (figure 9-32) is constructed of a series of steel links with machined teeth, fastened together to form a 30-inch long flexible hand operated chain saw. It has removable steel ring handles to provide a method of gripping the ends of the chain saw. The chain saw is stored in a metal container which is 5/8 x 2 5/8 inches.

NOTE

The Pocket Chain Saw is available from the following source:

Exploration Products
3924 Irongate Rd. Suite C
Bellingham, WA 98226
800-448-7312

9-272. APPLICATION.

9-273. The Pocket Chain Saw is used to cut wood, plastic, bone, rubber, or soft metal.

9-274. MAINTENANCE.

9-275. Maintenance of the Pocket Chain Saw is limited to inspection.

9-276. INSPECTION. The Pocket Chain Saw shall be inspected every 90 days or at intervals to coincide with the kit in which the Pocket Chain Saw is stored. Inspect the Pocket Chain Saw container for security and to ensure the contents are encased therein.

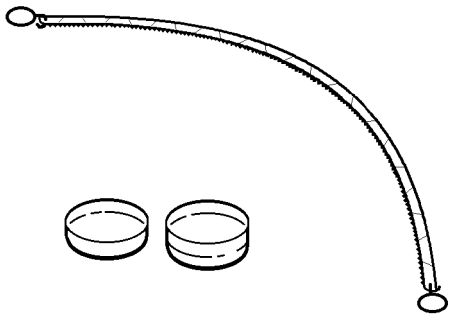

009032

Figure 9-32. Pocket Chain Saw

Section 9-30. Personnel-Lowering Device

9-277. DESCRIPTION.

9-278. The Personnel-Lowering Device (PLD) provides a safe method of descent should an aircrewmember be caught in a tree or other high obstacle while attempting an emergency parachute descent. The aircrewmember can attach the device to the entangled parachute, disconnect from the parachute, then lower safely to the ground.

9-279. CONFIGURATION.

9-280. The Personnel-Lowering Device (CL213D2-1, NIIN 00-451-3324, CAGE 80206) consists of the lowering device container and 150 feet of 3/4-inch tubular nylon, incorporating appropriate snaphook and a braking device folded within the container (figure 9-33).

9-281. APPLICATION.

9-282. The Personnel-Lowering Device (PLD) enables an aircrewmember who is entangled in a tree after parachuting to descend to the ground. The PLD is normally stored in rigid seat survival kits. Refer to NAVAIR 13-1-6.3-1.

9-283. MODIFICATION.

9-284. There are no current directives affecting the Personnel-Lowering Device.

9-285. MAINTENANCE.

9-286. Maintenance or repair to the Personnel-Lowering Device shall be performed by Intermediate Level or above unless otherwise specified. Maintenance consists of inspection and fabrication of the lowering device. Repair and fabrication instructions to maintain serviceability are listed in table 9-5.

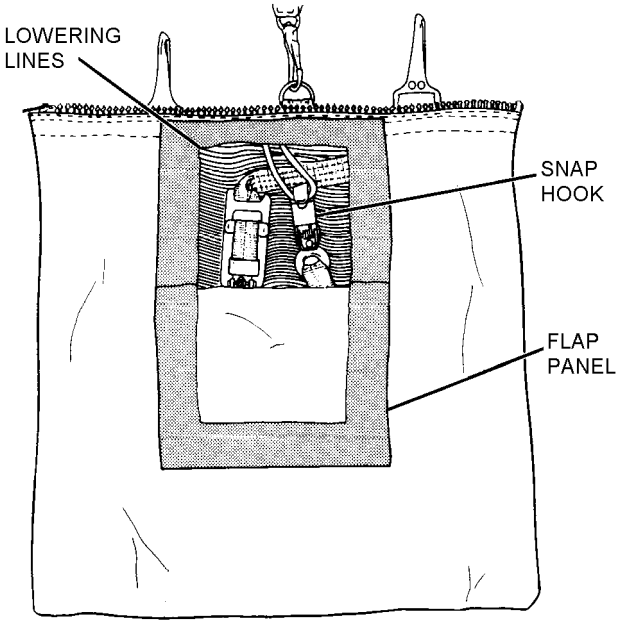

Figure 9-33. Personnel-Lowering Device

9-287. INSPECTION. The Personnel-Lowering Device shall be inspected upon issue and every 90 days thereafter, or at intervals to coincide with the inspection schedule of the kit or assembly in which the PLD is stored. To inspect the Personnel-Lowering Device, proceed as follows:

1. Check lowering line, container, and attachment components for signs of wear, cuts, deterioration, fraying, broken stitches, and improper attachment or installation.

2. Any webbing or fabric which has been in contact with grease, oil, liquid oxygen, strong caustic soaps, acid, or abrasive materials and shows evidence of damage or deterioration shall be removed from service.

3. Ensure that lines are not snagged or tangled in container.

9-288. FABRICATION OF THE PERSONNEL-LOWERING DEVICE. To fabricate the Personnel-Lowering Device, proceed as follows:

Materials Required

Quantity	Description	Reference Number
1	Kit PLD	V66-1ACC218
14 1/2 x 30 Inches and 8 x 7 Inches	Cloth, Duck, Nylon, Type III	MIL-C-7219 NIIN 00-765-2863
35 Inches Each	Fastener Tape, Hook and Pile, Type II	MIL-F-21840 NIIN 00-106-5974
2	Snaphook, 3/4-Inch	MIL-S-43770-12A MIZEI NIIN 00-264-7672
As Required	Webbing, Nylon, Tubular, 3/4-Inch	MIL-W-5625
10 Inches	Webbing, Textile, Nylon Type II, 1-Inch	MIL-W-4088 NIIN 00-262-1643
60 Inches	Cord, Nylon, Type III	MIL-C-5040 NIIN 00-240-2146
45 Inches	Webbing Textile Elastic Class I, 1-Inch	MIL-W-5664 NIIN 00-270-1869
13 x 13 Inches	Cloth, Duck, Cotton Type I	CCC-C-419, NIIN 00-185-8657
60 Inches	Tape, Textile, Reinforcing Nylon Type III, 3/4-Inch	MIL-T-5038 NIIN 00-176-8083
As Required	Thread, Nylon Type II, Class A, Size E	V-T-295 NIIN 00-244-0609

Table 9-5. Personnel-Lowering Device Repairs and Fabrications

Description of Repairs or Fabrications	Application	Paragraph
Fabrication of Personnel-Lowering Device	All Personnel-Lowering Devices	9-288

1. To make the lowering device container, proceed as follows:

a. Cut and sear from nylon duck the following panels:

one piece, 14 1/2 x 30 inches
one piece, 7 x 7 inches

b. Cut and sear the following pieces of 1-inch webbing:

two pieces, 3 inches long
one piece, 5 inches long

c. Cut the following pieces of hook and pile tape.

one piece, 14 1/2 inches long
two pieces, 4 1/2 inches long
one piece, 6 inches long

d. Cut and sear the following pieces of parachute nylon cord:

one piece, 5 inches long
one piece, 72 inches long

e. With the 30-inch dimension of the container panel running right and left, turn the left edge under 1/2-inch and the right edge over 1/2-inch. Place a 14 1/2-inch length of pile tape beneath the fold under and stitch in place with two rows of stitches 1/8-inch from edge and 3/4-inch apart. Place hook tape over 1/2-inch; fold over and stitch in the same manner.

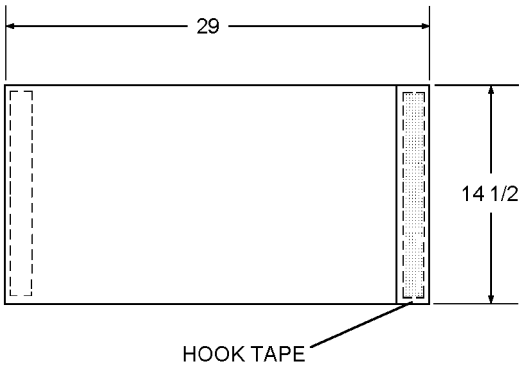

0928801e

Step 1e - Para 9-288

f. Measure 2 inches from the right edge of fabric. Cut out a 4-inch by 4 1/2-inch rectangle, centered along the 14 1/2-inch side of fabric. Sear edges of rectangle.

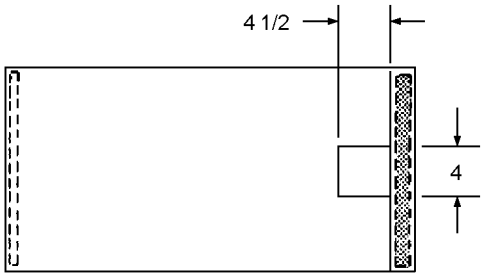

0928801f

Step 1f - Para 9-288

g. Stitch a 4 1/2-inch length of hook tape to each side of rectangle.

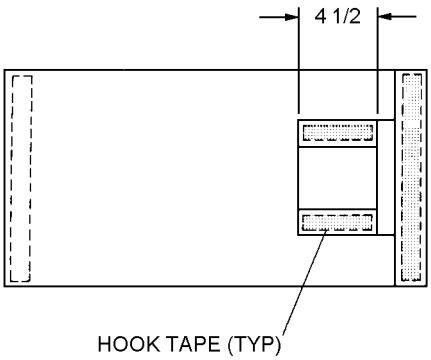

0928801g

Step 1g - Para 9-288

h. Place a 6-inch length of hook tape adjacent to 14 1/2-inch side of fabric. Prior to stitching hook tape, form a loop from the 5-inch length of nylon cord and tuck ends under center of hook tape to permit stitching to catch loop ends. Stitch hook tape in place.

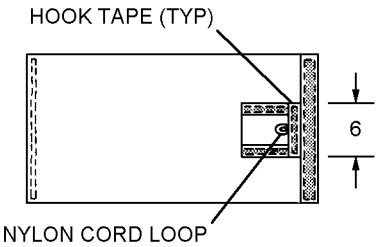

0928801h

Step 1h - Para 9-288

i. Install two 1 3/4-inch snaphooks each with a piece of 3-inch long nylon webbing. The webbing shall be folded over with the snaphook held within the fold. Boxstitch in place.

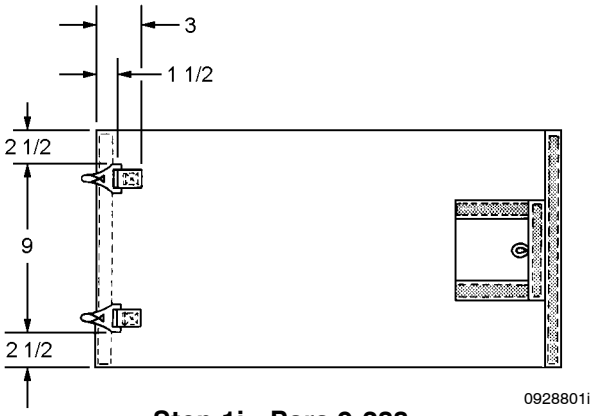

Step 1i - Para 9-288

j. Form a retrieving line loop by folding a 5-inch piece of nylon webbing. Place open edge 3 inches from left side of container panel, centered between snaphooks. Stitch in place using boxstitch.

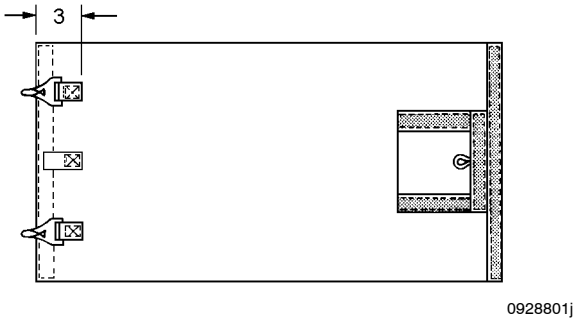

Step 1j - Para 9-288

k. Fold three sides of the square container flap panel over 1/2-inch. Baste in place.

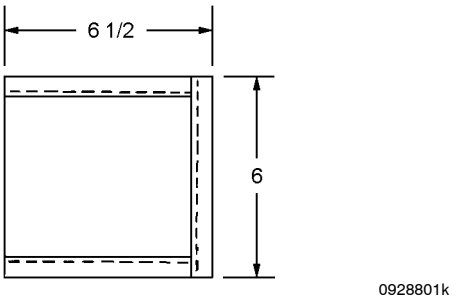

Step 1k - Para 9-288

l. Place a 6-inch length of pile tape over the center fold, flush with edge of flap. Stitch in place.

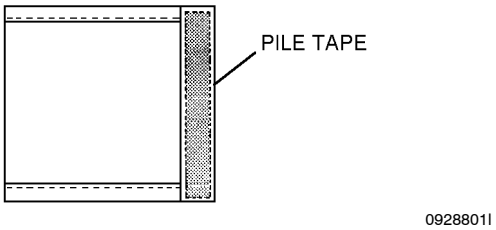

Step 1l - Para 9-288

m. Place a 4 1/2-inch length of pile tape along each of the remaining folds. Tape should butt against 6-inch length of pile tape. Stitch in place.

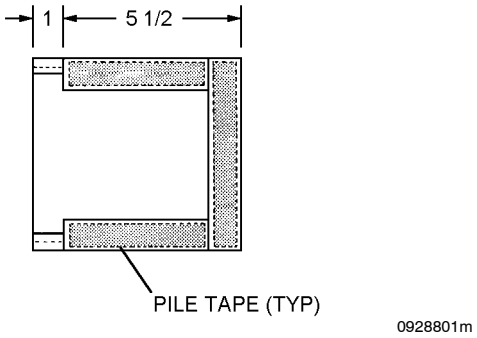

Step 1m - Para 9-288

n. Place the assembled flap with the pile tapes directly over the hook tapes on the container panel rectangular opening. Fold under remaining raw edge of flap, 1/2 inch. Stitch through flap fold and container panel to attach flap to container.

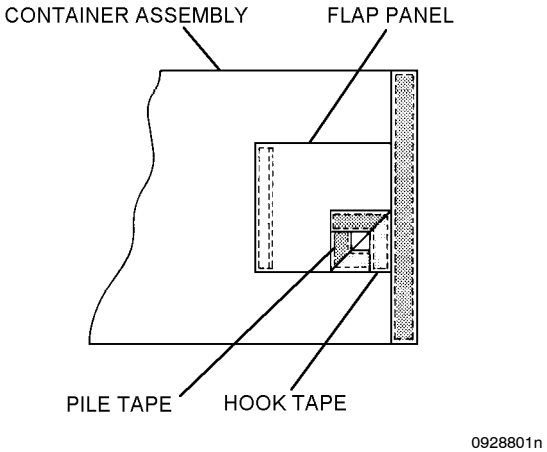

Step 1n - Para 9-288

o. Fold the container panel over, bringing the hook tape flush with, but not over, the pile tape, thereby keeping right edge 1 inch from coinciding with the left edge. Stitch through raw edges on each side, 1/2 inch from edge, to form container seams. Backstitch the seams on each end for a distance of 3/4 inch. Turn container right side out to complete the assembly.

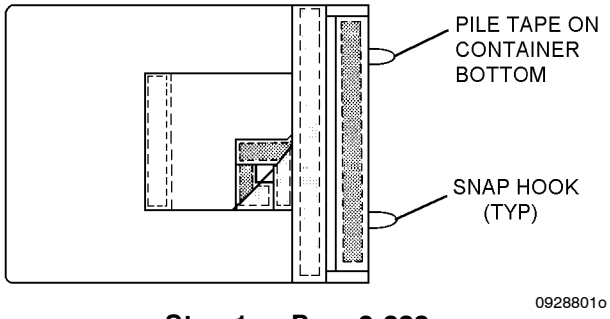

Step 1o - Para 9-288

2. To make the lowering line assembly, proceed as follows:

a. Cut the following pieces of 3/4-inch tubular nylon textile webbing:

(1) one piece, 151 feet 1/2 inches long

(2) one piece, 2 feet 9 inches long

b. Fold over each end of the 2-foot 9-inch length of tubular nylon, a distance of 4 1/2 inches. Place the attachment end of snaphook No. 66C1705 within one fold and the metal ring No. 66B1717 within the other fold. Stitch each fold a distance of 4 inches using nylon 6-cord in stitch pattern illustrated.

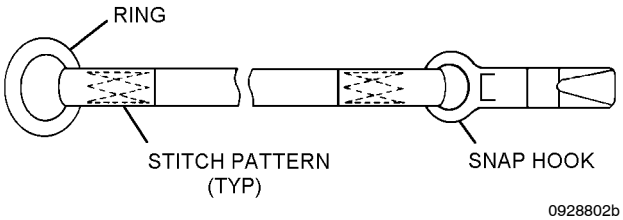

Step 2b - Para 9-288

c. Reeve the braking device on the white end of the long piece of tubular nylon. Fold 4 1/2 inches over on the white end of the long piece of tubular nylon. Place the metal ring, attached to the 2-foot 9-inch length of tubular nylon, within the fold. Stitch in place.

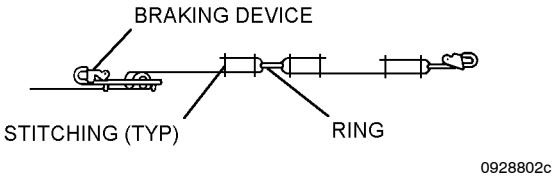

Step 2c - Para 9-288

NOTE

The last 20 feet of the opposite end of the longer length of tubular nylon is dyed yellow to indicate the approaching end of the line.

d. At the extreme end of the dyed portion of line, form a 4-inch double foldover. Stitch with a 1/2 x 2-inch boxstitch, using nylon 6-cord, to form a stop.

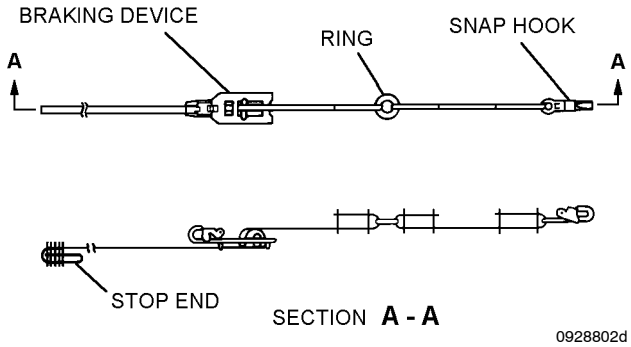

Step 2d - Para 9-288

3. To make the line tray, proceed as follows:

a. Cut one piece of cotton duct cloth 13 x 13 inches square.

b. Cut one piece of 3/4-inch nylon textile tape 52 3/4 inches long.

c. Cut two pieces of 1-inch wide elastic textile webbing 20 1/2 inches long.

d. Bind the edges of the 13-inch square cotton duck fabric with nylon tape. Starting at midpoint of one side, fold tape around edge of fabric and stitch with two rows of stitching. Sew tape completely around the cloth, and form a 3/4-inch overlap when ends meet.

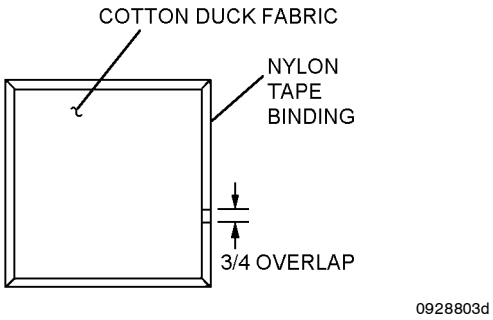

Step 3d - Para 9-288

e. Place the two pieces of elastic webbing 1 1/2 inches from edge on opposite edges of tray. Fold the end under 1/4-inch and double stitch across the elastic webbing, 1/8-inch from edge of tray.

f. Double stitch every 1 1/2 inches, forming a 2 1/2-inch loop in webbing between double stitched rows. Fold the remaining end of the tape under 1/4 inch and double stitch 1/8 inch from edge of tray.

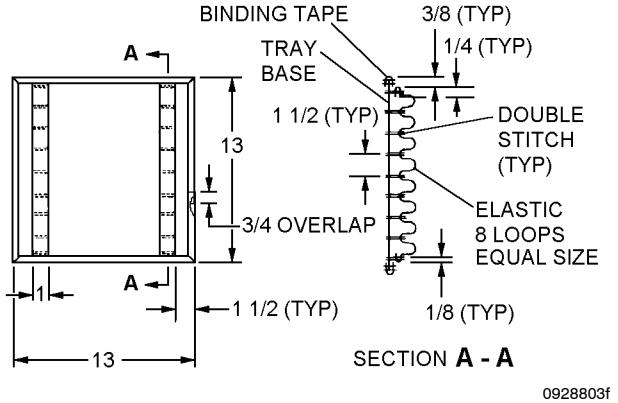

Step 3f - Para 9-288

4. To complete the fabrication of the lowering device assembly, proceed as follows:

a. Stow line, making twelve, 12 1/2-inch bights, placing nine folds into each elastic loop.

b. Place the completed line tray with line, into the completed container with the STOP end of the dyed portion of line entering first.

c. Open the flap and secure the lowering line snap to the nylon cord loop. Close the flap.

d. Attach the retrieving line to the center 1-inch webbing loop with a bowline knot.

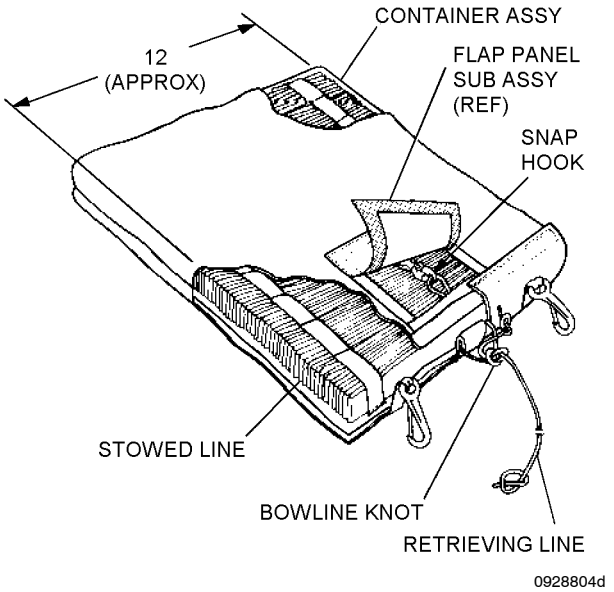

Step 4d - Para 9-288

Section 9-31. Hand Pump

9-289. DESCRIPTION.

9-290. The Hand Pump and its hose is used as a unit to aid aircrew personnel, forced to take to liferafts, to pump up various portions of the liferaft.

9-291. CONFIGURATION.

9-292. The Hand Pump unit (MIL-P-8258, NIIN 00-097-4580) consists of a barrel, plunger, check valve and hose (figure 9-34).

9-293. APPLICATION.

9-294. The Hand Pump is used to inflate liferaft seats, inflatable floors, and other compartments not inflated by the liferaft inflation assembly. The pump is also used to top-off an inflated liferaft or maintain inflation of a leaky liferaft.

9-295. MAINTENANCE.

9-296. Maintenance of the Hand Pump is limited to inspection.

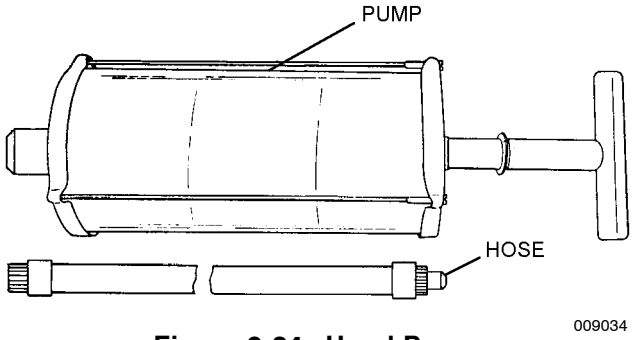

Figure 9-34. Hand Pump

9-297. INSPECTION. The Hand Pump shall be inspected upon issue and every 90 days thereafter, or at intervals to coincide with the inspection schedule of the kit or assembly in which the Hand Pump is stored. To inspect the Hand Pump, proceed as follows:

1. Operate pump to ensure pump delivers air.

2. Ensure that hose can be attached to Hand Pump and to liferaft topping-off valves.

3. Ensure hose is secured to Hand Pump with a short line to prevent loss.

Section 9-32. Rations

9-298. DESCRIPTION.

9-299. The Ration Packets are used in emergency situations for purposes of quick energy when no other food is available.

9-300. CONFIGURATION.

9-301. The Ration Packets (NIIN 01-028-9406) consist of two packets of candy and gum, twine, and an instruction sheet. These items are in a polyethylene bag or metal can (figure 9-35).

9-302. Datrex 2400Kcal food rations pack is an authorized substitute for the can or bagged food packets. The Datrex food rations can be purchased from the following source or other sources that carry the 2400Kcal packs:

Datrex Industries
(800) 828-1131
www.datrex.com
P/N DX2400F

NOTE

The rate of replacement is one 2400Kcal pack for every three persons. Example: four 2400Kcal packs = 12 persons.

9-303. APPLICATION.

9-304. The Ration Packet is intended to provide quick energy to the downed aircrewmembers when no other food is available.

9-305. MAINTENANCE.

9-306. Maintenance of Ration Packets is limited to a visual inspection.

9-307. INSPECTION. The Ration Packet shall be inspected upon issue and every 90 days thereafter, or at intervals to coincide with the inspection schedule of the kit or assembly in which it is stored.

1. Inspect packaging for holes, tears, corrosion, legibility of wording and security of vacuum pack as required.

2. Inspect Datrex product for shelf life date. Shelf life is 5 years from the date of manufacture. Annotate expiration date on history card.

3. Can and bag food rations have no shelf/service life.

4. Replace food rations as necessary.

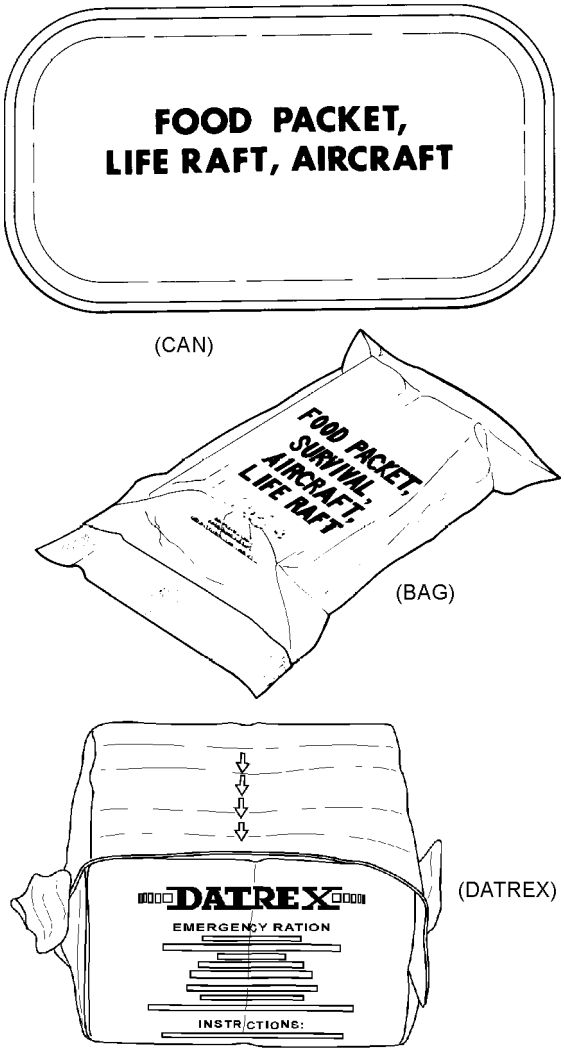

Figure 9-35. Rations

Section 9-33. MK-79 MOD 0 and MK-79 MOD 2 Personnel Distress Signal Kit

9-308. DESCRIPTION.

9-309. The MK-79 MOD 0 and MK-79 MOD 2 Personnel Distress Signal Kits consist of a pencil-type launcher and cartridge flare used to attract attention of rescue parties or aircraft. Each cartridge flare has a duration of 4 1/2 seconds minimum and is propelled upward to a height of 250 to 650 feet.

WARNING

Pyrotechnics must not be taken to the barracks and, when removed from bandolier, should be returned to original container.

9-310. CONFIGURATION.

NOTE

The MK-79 MOD 2 (NIIN 01-230-3974) is an alternate to the MK-79 MOD 0 (NIIN 00-866-9788) Personnel Distress Signal Kit.

9-311. The MK-79 MOD 0 (NIIN 00-866-9788) and MK-79 MOD 2 (NIIN 01-230-3974) Personnel Distress Signal Kits consist of one signal projector MK-31 MOD 0 (NIIN 01-123-4745) and a plastic bandolier holding seven screw-in signal cartridges MK-80 MOD 0 (NIIN 00-930-7746) or MK-80 MOD 2 (NIIN 01-216-3243). The plastic bandolier, which stores the signals until use, has plastic tabs over the signal end to protect the signal percussion primers from being struck accidentally. If the plastic bandolier is not used to store the signals, protective caps (MS90376-8Y) shall be used to protect the signal percussion primers (figure 9-36).

9-312. APPLICATION.

9-313. The MK-79 MOD 0 and MK-79 MOD 2 are intended to attract attention of SAR aircraft or ground rescue parties by launching cartridge flares into the air.

9-314. MAINTENANCE.

9-315. Maintenance of the MK-79 is limited to inspection.

NOTE

Inspection procedures apply to both the MK-79 MOD 0 and MK-79 MOD 2.

9-316. INSPECTION. The MK-79 shall be inspected upon issue and every 90 days thereafter, or at intervals to coincide with the inspection schedule of the kit or assembly in which the MK-79 is stored. To inspect the MK-79, proceed as follows:

WARNING

Dispose of any signals found to have corrosion or dented cases. Signals with even slight corrosion at the cap/body interface (output end of signal) may have more severe internal corrosion. This may result in violent action of the flare when fired causing severe or fatal injuries.

NOTE

Flare lots which have been reclassified by a Notice of Ammunition Reclassification (NAR) will only be removed and replaced when directed by an Aircrew System Bulletin (ACB).

If a bandolier is not used, protective plastic caps shall be installed on flares or flares shall be removed from service and stored.

1. Inspect for damaged primers.

2. Inspect flares for dents or other damage.

3. Inspect bandolier (if used) for plastic tabs protecting signal percussion primer.

4. Inspect for loose end caps. If loose, discard loose end cap.

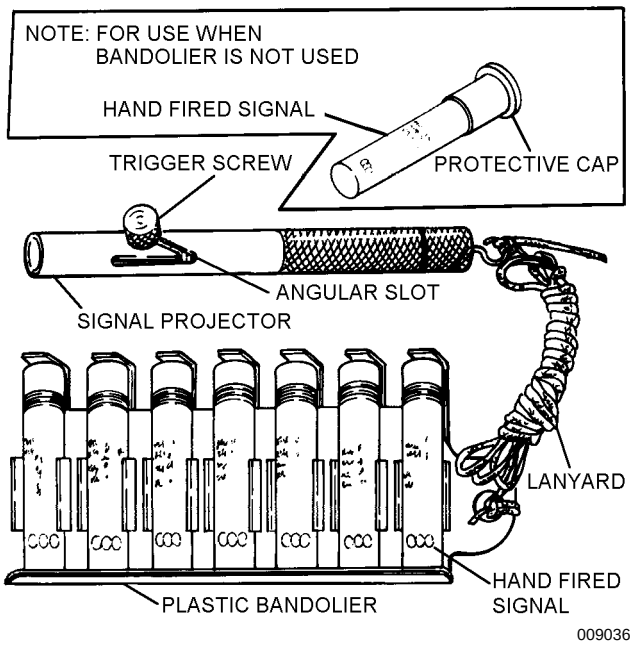

Figure 9-36. MK-79 MOD 0 and MK-79 MOD 2 Personnel Distress Signal Kit

5. Inspect flares for overflush or protruding primers. Replace if necessary.

6. Inspect for dents on launcher.

WARNING

Flare should not be threaded into launcher under any circumstance during inspection.

7. Inspect for loose or missing parts on launcher.

8. Ensure launcher is stored in the cocked position (knurled knob back) and is empty while in the survival vest pocket.

9. Prior to issue, the knob and handle of the launcher should be checked for security.

10. Ensure only screw-in type cartridges are issued with MK-79 MOD 0 and MK-79 MOD 2 Kits.

9-316A. Fabrication of Webbing Bandolier. The webbing bandolier is a replacement for the plastic bandolier issued with the MK 79 Mod 0 or Mod 2 Personnel Distress Signal Kit. The webbing bandolier is authorized for use only when the plastic bandolier has become broken or damaged and the survival vest does not have webbing keepers installed. To fabricate the webbing bandolier, proceed as follows:

Materials Required

Quantity	Description	Reference Number
A/R	Webbing, Nylon, Type IX, CL 1, 3-Inch Wide, OG	MIL-W-4088 NIIN 00-261-8846
A/R	Webbing, Type 1, Class 1, 1-Inch Wide, Black	MIL-W-5664 NIIN 00-263-3600
1	Grommet, Brass, Metallic, Size 0	MS20230BS10 NIIN 00-231-6582
7	Cap, Protective	MS90376-8Y NIIN 00-324-9158
A/R	Cord, Nylon, Type I -or-	MIL-C-5040 NIIN 00-240-2154
A/R	Cord, Nylon, Type IA	MIL-C-5040 NIIN 00-292-9920
A/R	Thread, Nylon, Size E	V-T-295 NIIN 00-204-3884

NOTE

All stitching shall be ASTM-D-6193, Type 301 lockstitch, 8 to 10 stitches per inch.

Backstitch or overstitch minimum 1 inch where required.

1. Cut a 5-inch piece of Type IX nylon webbing and sear ends. At one corner of the webbing make a reference mark 1/2 inch down from top and 1/2 inch in from side. Cut a hole in the webbing at the 1/2 inch reference mark. Install a size “0” spur grommet in the hole. For reference purposes the grommet end of webbing keeper shall be referred to as the top end.

2. Place reference marks 1-inch inboard from both sides on both the top and bottom ends of the nylon webbing. Using a straight edge connect the reference points established on each side of the webbing, running from the top end to bottom end. If done properly, this should place two 5-inch long parallel lines running from top end to bottom end.

3. Place eight reference marks evenly spaced 1/2 inch apart on each of the 5-inch reference lines. Using a straight edge, connect the eight reference marks between the two 5-inch lines. These are your sewing lines for the elastic webbing.

4. Cut a 9-inch long piece of 1-inch wide, elastic webbing and lay on a flat surface. Using a ruler, draw eight sewing lines across the width of the webbing, at 1-inch increments, beginning one inch from either end of the elastic webbing.

5. Place the elastic webbing over the 5-inch long nylon webbing. Align the first sewing line on the elastic webbing to the sewing line on the 3-inch nylon webbing and sew in place using two rows of "E" thread. Ensure each row of stitching overlaps both edges of the elastic webbing by a minimum of two stitches to prevent the edges of the elastic webbing from pulling away from the nylon webbing. Continue sewing the remainder of the elastic webbing in the same manner.

6. At the completion of step 5 turn the raw edges of the elastic webbing under and sew in place using two rows of "E" thread.

Figure 9-36A. Photo of an Example Webbing Bandolier

CAUTION

Ensure plastic protective caps are insatlled on flare cartridges prior to installation into webbing keepers.

7. Install cartridges into webbing keepers with cartridges facing opposite each other.

8. Cut a 12-inch piece of nylon cord and sear ends. Tie and overhand knot in each end. Using a bowline knot secure one end to the bandolier and the other end to the vest. Fake any excess nylon cord and secure with a rubber band.

Section 9-34. MK-124 MOD 0 Marine Smoke and Illumination Signal

9-317. DESCRIPTION.

9-318. The MK-124 MOD 0 Marine Smoke and Illumination Signal is intended for either day or night signaling by aircraft personnel downed at sea or land. The signal is a one hand operable device, intended for rescue use. Its small size and weight permits it to be carried in life vest or flight suit pockets and on liferafts. The signal is listed under DL 3139734, Specification WS 13697, NIIN 01-030-8330, and DOD Code No. L283 (figure 9-37).

9-319. CONFIGURATION.

9-320. The MK-124 MOD 0 signal consists of an aluminum case slightly over 5 inches long and 1 1/2 inches in diameter. Each end of the signal is provided with a protective cap. The case has two raised bead circles around its circumference on the flare (night) end to facilitate identification in darkness. On the outside of the MK-124 MOD 0 are operating instructions and further identification of smoke (day) and flare (night) ends. The case contains four subassemblies; smoke candle, smoke igniter, flare candle and flare igniter. The igniter is one-hand operable. It consists of an arming lever that must be extended to the armed position and then depressed to cock and release the firing pin. The signal emits an orange smoke or red flare for approximately 20 seconds.

9-321. APPLICATION.

9-322. The MK-124 MOD 0 signal is intended to attract the attention of SAR aircraft and to give wind drift direction. The ignited MK-124 MOD 0 signal must be held at arms length at a 45_ angle from the horizontal. If the signal is being used at sea, hold it over the side of the liferaft to prevent damage to the liferaft from hot residue.

9-323. MAINTENANCE.

9-324. Maintenance of the MK-124 MOD 0 signal is limited to inspection.

9-325. INSPECTION. The MK-124 MOD 0 shall be inspected upon issue and every 90 days thereafter, or at intervals to coincide with the inspection schedule of the kit or assembly in which it is stored. To inspect the MK-124 MOD 0, proceed as follows:

THIS PAGE INTENTIONALLY LEFT BLANK.

WARNING

Dents or other imperfections might result in violent action of the flare when fired. Damaged flares shall be discarded in accordance with applicable instructions.

NOTE

Flare lots which have been reclassified by a Notice of Ammunition Reclassification (NAR) will only be removed and replaced when directed by an Aircrew System Bulletin (ACB).

1. Inspect signal for dents as follows:

a. If signal appears to have been crushed to the point where either candle would be distorted enough to adversely affect its burn time, it shall be rejected.

b. A dent of 1/8 inch or less in any area other than those identified in items c and d below is acceptable.

c. Any dent located along or adjacent to the seam or either canned end of the outer container of the signal which could compromise the water tightness of the container and subject the signal to leakage when exposed to moisture shall be rejected.

WARNING

Due to the possibility of ignition, pull strips shall not be moved from the stowed position for any reason during inspection procedures.

d. A dent of any size located on or close to the pull strip under the protective caps on either end of the signal which could permit the entrance of moisture and cause signal to malfunction shall be rejected.

2. Ensure Lot Number and usage instructions are legible.

3. Inspect for external corrosion.

NOTE

New end caps will be introduced by attrition. The new end caps will be color-coded the same as the firing levers.

4. Ensure that protective caps are securely in place. Signal shall not be packed without end caps.

5. Replace flare as required.

9-326. ADDITION OF TAPE. Clear packing tape (NIIN 00-234-7960 or equivalent) may be placed over the instructions and lot number on the flare to prevent wearing.

1. Cut two pieces of clear tape and place lengthwise over existing label to protect it from wear.

NOTE

Unreadable markings shall render the flare NRFI and it shall be replaced.

009037

Figure 9-37. MK-124 MOD 0 Marine Smoke and Illumination Signal

Section 9-34A. MK-189 MOD 0 Personnel Distress Signal Kit

9-326A1. DESCRIPTION.

9-326A2. The Mk 189 Mod 0 Personnel Distress Signal Kit (NIIN 01-366-0344) is designed for use in multi-place life rafts. It is the preferred method for stowing signal flares in the Life Raft Accessory Kit. The description and application of the individual signals can be found in Chapter 9, Sections 9-33 and 9-34.

9-326A3. CONFIGURATION.

9-326A4. The kit consists of six (6) Mk 124 Mod 0 Marine smoke and illumination signals and two (2) Mk 79 Mod 2 personnel distress signal kits. The flares are stored in a Mk 3 Mod 0 signal container. The signal container is used to prevent damage to the signal flares when stored inside the life raft accessory container.

9-326A5. MAINTENANCE.

9-325A6. Maintenance of the Mk 189 Mod 0 is limited to a place in service and visual inspection as outlined in Paragraph 9-326A7.

9-326A7. INSPECTION.

CAUTION

Individual flare lot numbers contained within a single signal container are documented by Crane IN. Do not replace flares or mix flares from other kits. Inspect only one kit at a time to avoid mixing flares from other kits. Flares that are determined to be NRFI shall render the kit NRFI and it shall be replaced.

NOTE

The Mk 189 Mod 0 has its own lot number located on the outside lid of the signal container. This lot number shall be used for inspections and documentation. Lots which have been reclassified by a Notice of Ammunition Reclassification (NAR) will only be removed and replaced when directed by a technical directive.

1. Inspect container for dents and corrosion. Excessive damage, corrosion or broken latches shall render the Mk 189 Mod 0 kit NRFI and it shall be replaced.

2. (Place in service only) Remove outside shipping and RFI tags. Break seals and discard.

3. Inspect Mk 124 flares in accordance with Section 9-34.

4. Inspect Mk 79 kits in accordance with Section 9-33.

5. Return flares to signal container, close lid and secure latches.

NOTE

Latches are not required to be resealed. Pack the Mk 189 Mod 0 kit in accessory kit in accordance with NA 13-1-6.1-1.

6. For history card documentation, use only the information from the lid of the container. All documentation shall be in accordance with COMNAVAIRFOR INST 4790.2.

THIS PAGE INTENTIONALLY LEFT BLANK.

Section 9-35. Bailing Sponge

9-327. DESCRIPTION.

9-328. The Bailing Sponge (L-S-626) is contained in the survival kit to catch rain water, bail a liferaft, for personnel hygiene, and as a fishing lure (a small piece soaked in animal blood). The sponge is made from cellulose and comes in various sizes (figure 9-38).

9-329. MAINTENANCE.

9-330. Maintenance of the Bailing Sponge is limited to inspection.

9-331. INSPECTION. The Bailing Sponge shall be inspected upon issue and every 90 days thereafter or at intervals to coincide with the inspection schedule of the kit or assembly in which the Bailing Sponge is stored. Inspect the Bailing Sponge for rips, tears and contamination.

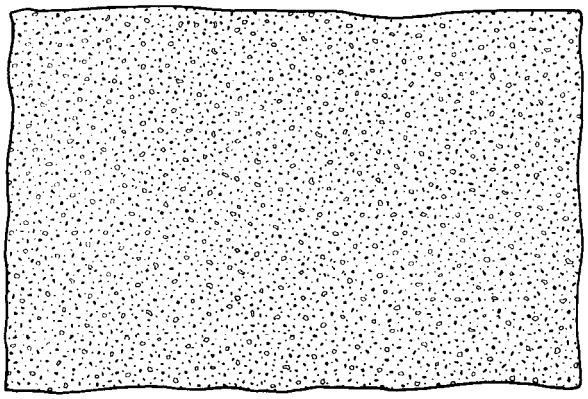

009038

Figure 9-38. Bailing Sponge

Section 9-36. Signaling Whistle

9-332. DESCRIPTION.

9-333. The Signaling Whistle is used for attracting attention of rescue ships or personnel in foggy weather or at night.

9-334. CONFIGURATION.

9-335. The Signaling Whistle (MIL-W-1053, NIIN 00-254-8803) is made of plastic with a lanyard attached for easy access and to prevent loss (figure 9-39).

9-336. APPLICATION.

9-337. The Signaling Whistle is intended for use when an aircrewmember is downed and a signal is needed to attract attention of the rescue party or to gather members of the aircrew together.

NOTE

When current supplies are exhausted, Signaling Whistle MIL-W-1053 (NIIN 00-254-8803) will be replaced by Signaling Whistle, Classic Fox 40, (NIIN 01-447-8766).

9-338. MAINTENANCE.

9-339. Maintenance of the Signaling Whistle is limited to inspection.

9-340. INSPECTION. The Signaling Whistle shall be inspected upon issue and every 90 days thereafter, or at intervals to coincide with the inspection schedule of the kit or assembly in which the signaling whistle is stored. To inspect the Signaling Whistle, proceed as follows:

1. Ensure whistle side discs are not loose or missing. Inspect whistle for cracks and damaged ball. Damaged or defective whistles shall be replaced.

2. The whistle shall be blown with a normal blow (regular exhalation); it shall also be blown with an overblow (forced exhalation). If the whistle fails to emit a highly audible sound, it shall be replaced.

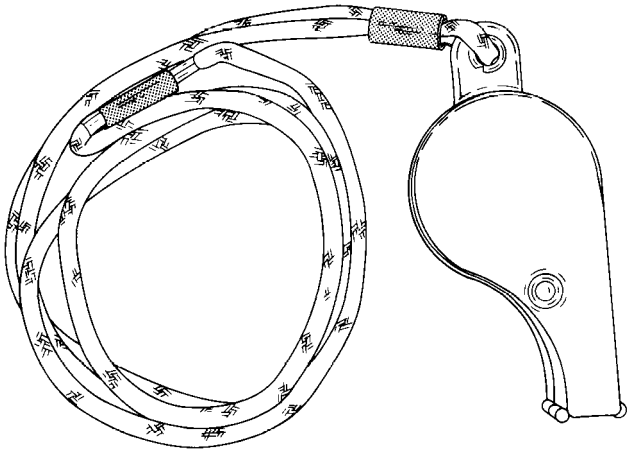

009039

Figure 9-39. Signaling Whistle

Section 9-37. Signaling Whistle, Classic Fox 40 (Black, No-Moving Parts)

9-341. DESCRIPTION.

9-342. The Classic Fox 40 Signaling Whistle, (NIIN 01-447-8766) is an all plastic whistle with no moving parts. It produces a variable high frequency sound which is more readily heard over background noise. The primary purpose of the Classic Fox 40 Signaling Whistle is to attract attention and provide a focal point for search and rescue personnel during low visibility conditions at sea or on land.

9-343. CONFIGURATION.

9-344. The Classic Fox 40 Signaling Whistle comes in one configuration; all plastic with no moving parts. A lanyard shall pass through eyelet of whistle for attachment to the individual aircrewmember's survival vest (figure 9-40).

NOTE

The Classic Fox 40 Signaling Whistle shall replace current Signaling Whistle (NIIN 00-254-8803) through attrition.

9-345. APPLICATION.

9-346. The Classic Fox 40 Signaling Whistle is intended for use by downed aircrewmembers to attract attention of search and rescue personnel and/or to provide assembly point for other members of downed aircrew.

9-347. MAINTENANCE.

9-348. Maintenance of the Classic Fox 40 Signaling Whistle shall be limited to inspection and simple purging to clean dirt or excess moisture from interior of whistle.

9-349. CLEANING. Clean excess moisture and dirt from interior of whistle by forcefully blowing whistle. Clean exterior using clean damp cloth.

9-350. INSPECTION. The Classic Fox 40 Signaling Whistle shall be inspected upon issue and every 90 days thereafter or at intervals to coincide with inspection schedule of kit or assembly in which whistle is stowed. To inspect the Signaling Whistle, proceed as follows:

1. Thoroughly check for cracks or other defects. Cracked and/or defective whistles shall be replaced.

2. Test whistle using normal breath pressure and again using forceful breath pressure. If whistle fails to emit highly audible sound, it shall be replaced.

3. Inspect lanyard for cuts, fraying, and security of attachment to whistle. Replace lanyard as necessary.

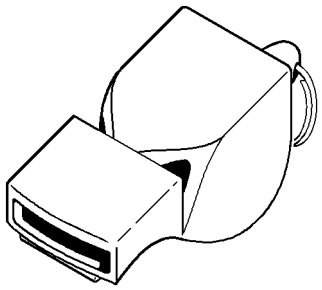

009040

Figure 9-40. Classic Fox 40 Signaling Whistle

Section 9-38. Aircrewmember's Survival Tool Kit

9-351. DESCRIPTION.

9-352. The Aircrewmember's Survival Tool Kit aids a downed aircrewmember to sustain life in adverse environments.

9-353. CONFIGURATION.

9-354. The Aircrewmember's Survival Tool Kit (depending on the type) contains various tools such as an axe, saw, lens, sharpening stone and fire starter (figure 9-41). The saw and axe also have covers to protect the aircrewmember from injury during travel. Applicable reference document is MIL-S-8642.

9-355. APPLICATION.

9-356. The Aircrewmember's Survival Tool Kit is intended to aid in constructing shelter, animal traps, cutting firewood and starting fires. Items in the kit can also be used to skin animals, clean fish, or as weapons.

9-357. MAINTENANCE.

9-358. Maintenance of the Aircrewmember's Survival Tool Kit is limited to inspection.

9-359. INSPECTION. The Aircrewmember's Survival Tool Kit shall be inspected upon issue and every 90 days thereafter, or at intervals to coincide with the inspection schedule of the kit or assembly in which the survival tool kit is stored. To inspect the Aircrewmember's Survival Tool Kit, proceed as follows:

WARNING

Metal matches are a suspected source of spontaneous ignition through oxidation. The metal match should remain in its original sealed container (foil-wrapped) until ready for use. DO NOT STOW AFTER REMOVAL FROM PACKAGE. All metal matches in polyethylene and open packets shall be removed from service and discarded in a fireproof container.

NOTE

The Aircrewmember's Survival Tool Kit may be considered RFI without the presence of metal matches and/or tinder.

1. Ensure completeness of kit.

2. Ensure that kit is free of deterioration, rust, and broken components.

Section 9-39. Aircrewmember's Lighted Clipboard (MXU-163/P)

9-360. DESCRIPTION.

9-361. The Aircrewmember's Lighted Clipboard is designed to be held in place on the aircrewmember's thigh with a quick-release adjustable leg strap.

9-362. CONFIGURATION.

9-363. The Aircrewmember's Lighted Clipboard (MIL-C-23157) is made of aluminum and consists of a lighted assembly, two spring clips (to hold flight plan cards and other pertinent data), pencil sharpener, two tube pencil holders, coil spring pencil holder, two polyurethane friction strips, and hook and pile tape (provides a protective cover for quick-release button). The light assembly consists of three 1.5-volt AA batteries, two 352 replaceable type lamps, and a rotary action switch with rheostat for varying the light intensity. The battery holder tube is made of aluminum with a knurled end cap held in place with a bayonet type lock (figure 9-42).

NOTE

Use of alkaline batteries (NIIN 00-985-7845) is preferred. Carbon-zinc batteries may he used only when alkaline batteries are unavailable.

9-364. APPLICATION.

9-365. The Aircrewmember's Lighted Clipboard is intended to provide a pilot with a place to keep his flight plan and enroute charts and to provide a surface for making notations while in flight.

9-366. MODIFICATION.

9-367. There are no current directives affecting the Aircrewmember's Lighted Clipboard.

9-368. MAINTENANCE.

9-369. Maintenance or repair of the Aircrewmember's Lighted Clipboard shall be performed at the lowest capable level. Maintenance consists of inspection and installation of safety wire on battery cap. Repair, fabrication, and installation instructions are listed in table 9-6.

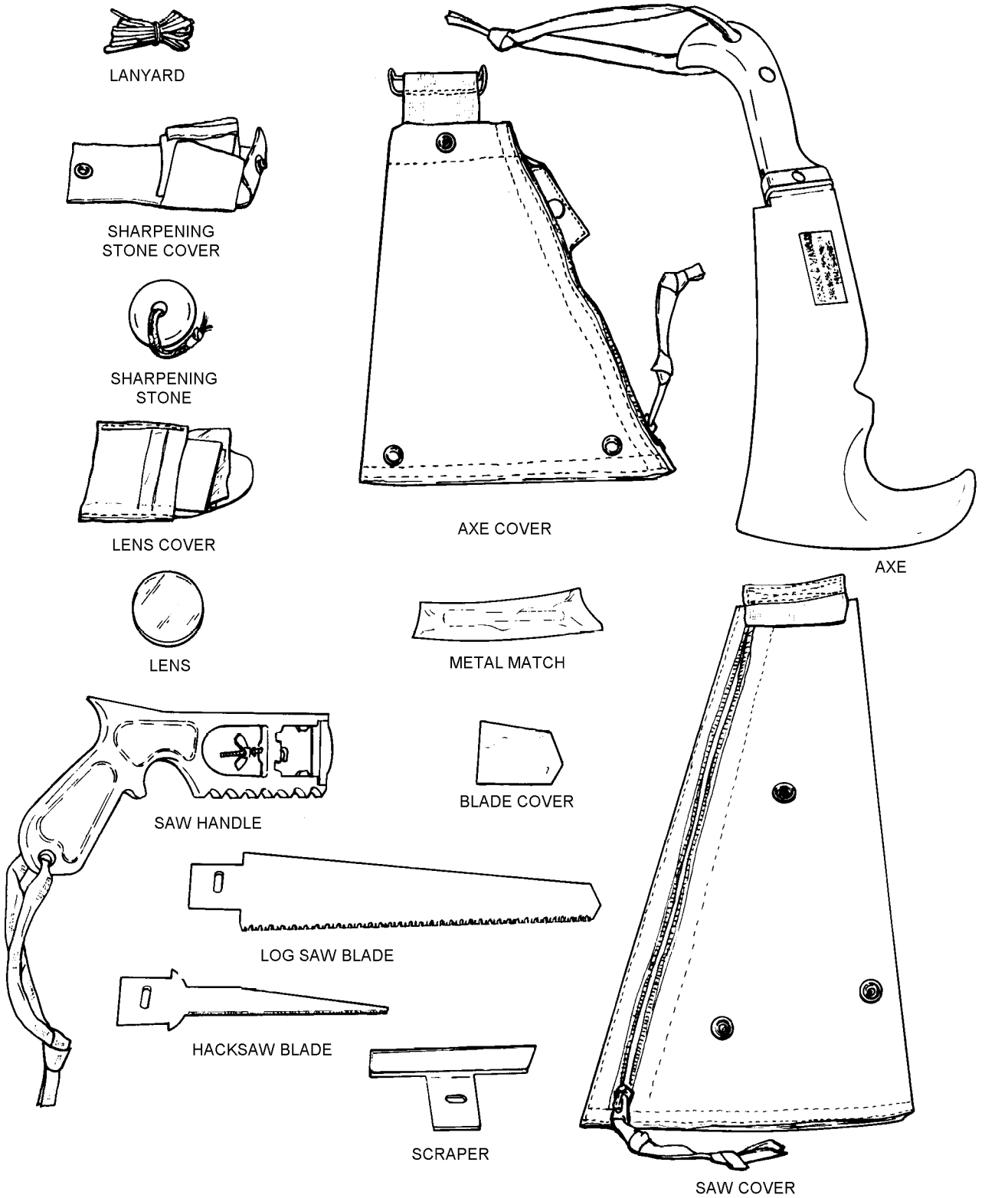

009041

Figure 9-41. Aircrewmember's Survival Tool Kit (Typical)

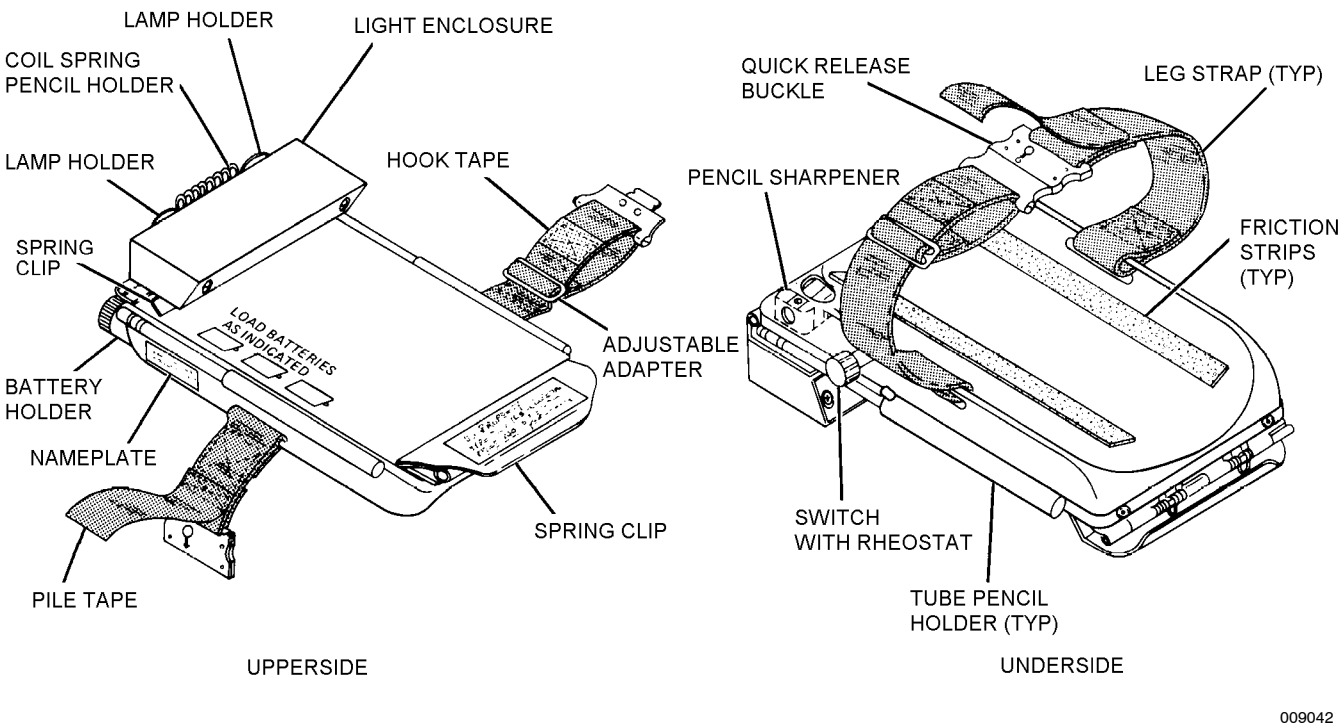

Figure 9-42. Aircrewmember's Lighted Clipboard (MXU-163/P)

Table 9-6. Aircrewmember's Lighted Clipboard Repairs and Fabrications

Description of Repairs or Fabrications	Application	Paragraph
Installation of Safety Wire to Battery Cap	All Aircrewmembers	9-371

9-370. INSPECTION. The Aircrewmember's Lighted Clipboard shall be inspected upon issue and every 90 days thereafter, or at intervals to coincide with the inspection schedule of the kit or assembly in which the Aircrewmember's Clipboard is stored. To inspect the Aircrewmember's Clipboard, proceed as follows:

1. Ensure clipboard is not broken, cracked, or bent, or otherwise damaged.

2. Ensure spring clips, light assembly, battery holder cap, leg strap buckle, and other functioning accessories operate properly.

3. Inspect battery and battery compartment for corrosion.

9-371. INSTALLATION OF SAFETY WIRE TO BATTERY CAP (IF REQUIRED). To safety-wire the battery cap to preclude unintentional separation from battery holder, proceed as follows:

NOTE

Safety-wiring of cap is applicable only if cap appears loose when attached to battery holder.

Materials Required

Quantity	Description	Reference Number
1	Drill, No. 52	—
As Required	Aluminum Alloy Wire 0.032-Inch Diameter Temper 0	QQ-A-225/1 NIIN 00-508-2549

1. Remove cap (turn counterclockwise to unlock) and remove batteries (if installed) from battery holder.

CAUTION

Avoid drilling holes close to cap retention pin. Ensure spring attached to cap is not damaged.

2. Using a No. 52 drill, drill two holes in cap as shown.

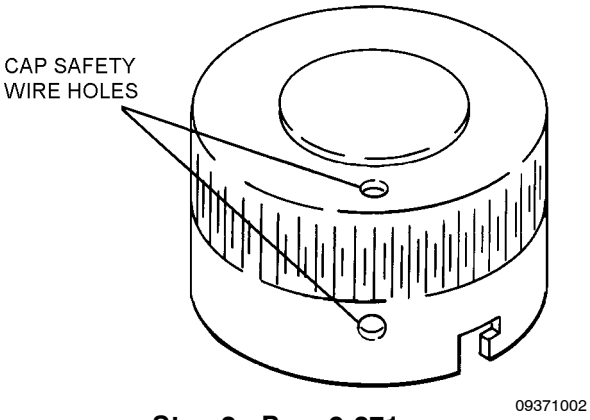

Step 2 - Para 9-371

3. Place drilled cap on battery holder and turn clockwise to lock.

4. Mark location of drilled (side) hole of cap on battery holder.

5. Remove cap from battery holder and center punch battery holder on mark (step 4).

6. Place a No. 52 drill on punch mark (step 5), and drill hole in battery holder.

7. Install batteries, place cap on battery holder, and turn clockwise to lock.

8. Route safety wire through matching side holes of cap and battery holder and through top hole of cap. Twist end of wire a minimum of four times and trim excess.

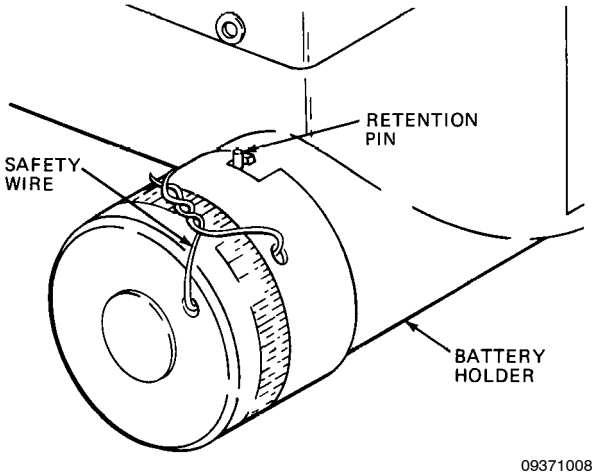

Step 8 - Para 9-371

9. To avoid possible injury during handling/use, fold trimmed wire down against cap. Wrap two to three turns of pressure sensitive tape around cap covering wire ends.

Section 9-40. Pilot's Mapstrap Kneeboard, Clipboard

9-372. DESCRIPTION.

9-373. The Pilot's Mapstrap Kneeboard, Clipboard, NIIN 01-012-9174, (figure 9-43) (hereinafter also referred to as board) is 5 x 8 inches, made of flexible plastic. The board is designed to be used in position around the thigh, and held in place and adjusted by use of hook and pile tape. An extension piece is provided in the kit for use with bulkier winter clothing or larger aircrew persons. An additional strap is provided to secure larger items such as Approach Plates or pocket NATOPS to the board.

9-374. APPLICATION.

9-375. The Pilot's Mapstrap Kneeboard, Clipboard is an optional item which provides a readily accessible place to hold notes or other information.

9-376. MAINTENANCE.

9-377. The aircrewmember is responsible for maintenance of the Pilot's Mapstrap Kneeboard, Clipboard. Maintenance is limited to Visual Inspection to determine integrity of straps and fasteners. There are no authorized repairs. Boards with worn parts shall be replaced.

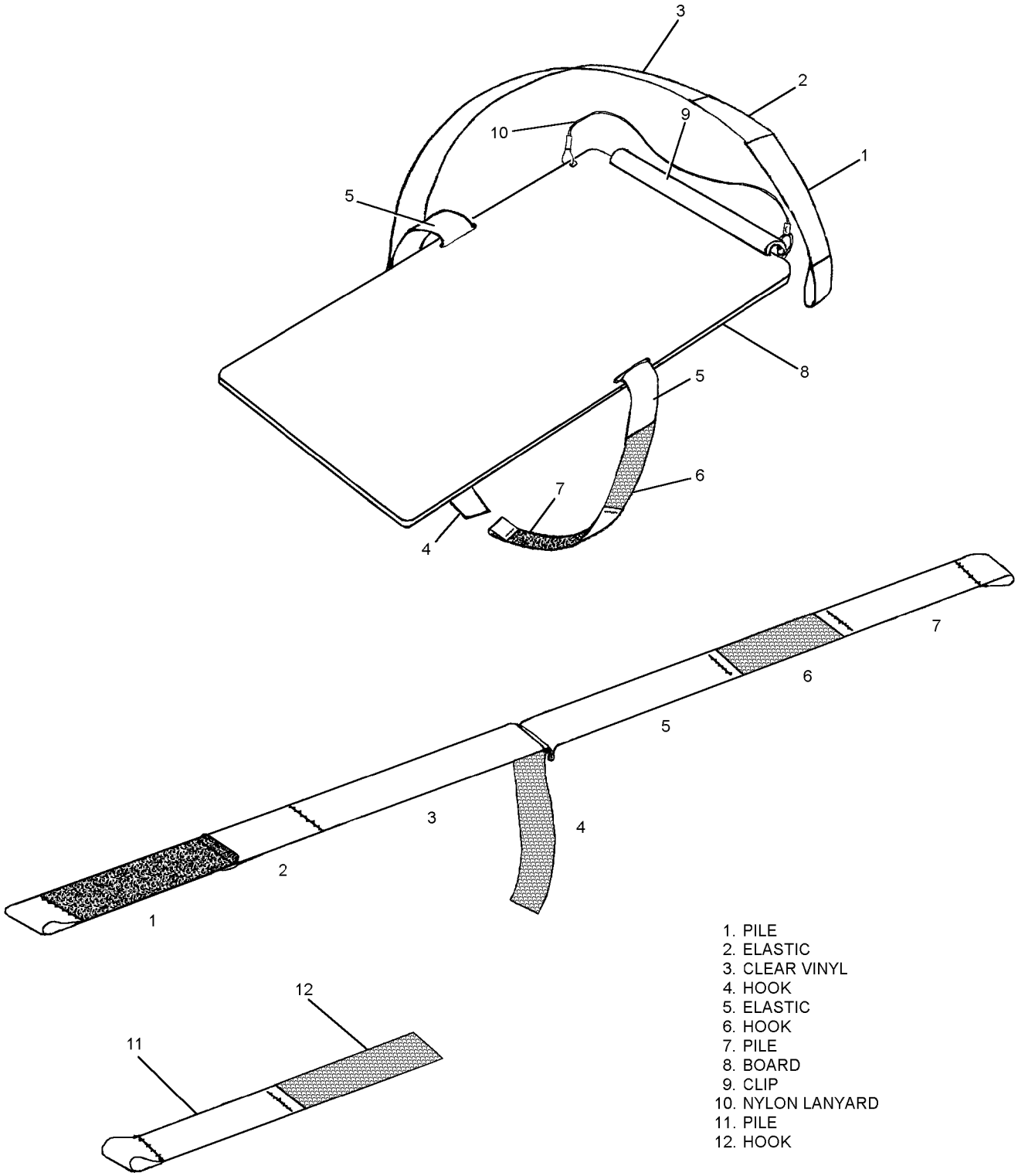

Figure 9-43. Pilot's Mapstrap Kneeboard, Clipboard

Section 9-41. Mechanical Patch

9-378. DESCRIPTION.

9-379. The Mechanical Patch is a device for temporarily sealing a hole in the LRU-15/A liferaft. Two Mechanical Patches are packed in the droppable accessory container of the LRU-15/A liferaft assembly.

9-380. CONFIGURATION.

9-381. The Mechanical Patch (13202E2870-1, CAGE 81336, NIIN 00-720-8864) consists of two alloy plates. The bottom plate is fitted with a hinge and a rubber gasket which seals between the liferaft fabric and cover plate. A wing nut holds the patch in place. A handle, which facilitates positioning the patch and a nylon cord which prevents loss, are also attached. Applicable reference document is MS27826 (figure 9-44).

9-382. APPLICATION.

9-383. The Mechanical Patch is used to make emergency repairs to the LRU-15/A liferaft.

9-384. MAINTENANCE.

9-385. Maintenance of the Mechanical Patch is limited to inspection.

9-386. INSPECTION. The Mechanical Patch shall be inspected upon issue and every 90 days thereafter, or at intervals to coincide with the inspection schedule of the kit or liferaft assembly in which the Mechanical Patch is installed. To inspect the Mechanical Patch, proceed as follows:

1. Inspect for completeness of assembly.

2. Inspect for corrosion.

3. Inspect for deteriorated or cracked gasket.

4. Inspect for security of weld.

5. Inspect for severely bent or dented cover.

9-387. OPERATION. To temporarily repair a hole in a liferaft, proceed as follows:

1. Loop cord around wrist to prevent loss of Mechanical Patch.

2. Dip Mechanical Patch in water to facilitate insertion.

3. Push base through hole in fabric. If hole is too small, carefully enlarge so base can be forced through.

4. Pull base back against inner fabric surface and slide cover over screw and against outer fabric surface.

5. Adjust Mechanical Patch to cover hole completely and hold it in place.

6. Screw down wing nut firmly.

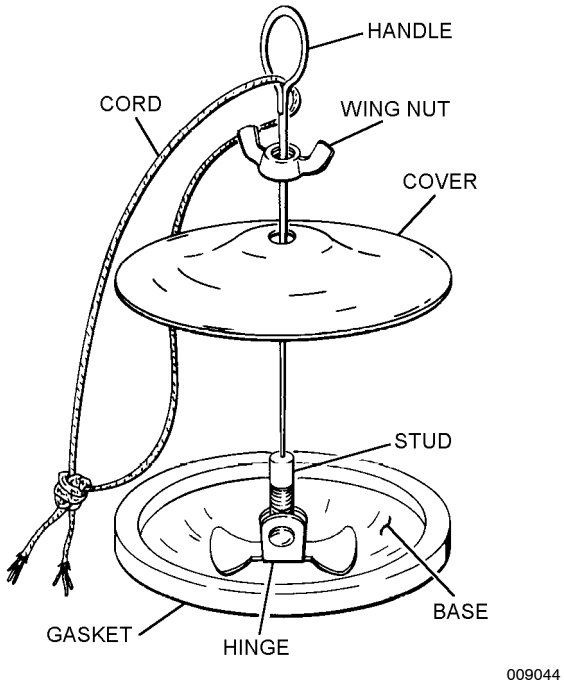

Figure 9-44. Mechanical Patch

Section 9-42. Relief Systems

9-388. DESCRIPTION.

9-389. The following personal issue Relief Systems may be carried as optional items.

1. Relief Bag. This relief system is a polyethylene bag (MIL-B-83665, NIIN 00-922-9469) with absorbent sponge. It is intended for full bladder voiding. Use of the bag is explained on the yellow card that is included with the bag (figure 9-45).

2. Field Commode. This plastic pouch (NIIN 01-382-4327) with V-shaped contoured edge and zipper seal contains absorbent powder which gels urine upon contact. It is intended for full bladder voiding. Use of the field commode is explained on pouch.

3. Solid Waste Relief System. This relief system (NIIN 01-379-1341) includes a plastic bag with sealer, tissue paper, towelette, and enzyme packet. It is intended for full voiding of liquid and solid waste. Use of the solid waste relief system is explained on system container.

4. Quilted Absorbent Pad. The Quilted Absorbent Pad is a light to moderate capacity bladder relief garment which draws liquid away from the skin, disperses liquid throughout pad and locks liquid in gel to prevent leakage. The pad's foam backing provides containment and a deodorant neutralizes odor. The pad is 8 1/2 x 4 x 3/8 inches. Use of the Quilted Absorbent Pad is explained on the packaging.

NOTE

The quilted absorbent pad is available through the following open-purchase source:

CONFAB
601 Allendale Rd.
King of Prussia, PA 19406

1-800-326-6322, ext 2497
ATTN: Karen Fischer

UPC 037867-23218 "Surety Guard"
Case = 4 pkgs of 24 units = $28.00
Min order 10 cases

5. Absorbent Undergarment. This moderate to high capacity undergarment has a non-woven fabric against the skin, moisture-proof packaging and elastic leg gathers which provide a snug fit for leakage protection. The absorbent material within the core locks in liquid and neutralizes odor-causing acids. Reusable elastic waist straps, which are adjustable up to 54 inches, secure undergarment to body. The undergarment is 22 x 6 x 1/8 inches. Use of the undergarment is explained on the packaging.

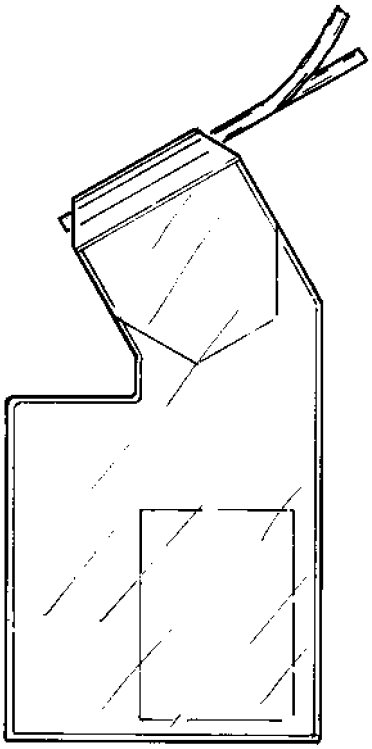

009045

Figure 9-45. Relief Bag

NOTE

Contact the distribution center closest to your location to find local carriers of the absorbent undergarment. The Absorbent Undergarment is available through the following open-purchase source:

McKesson Distribution Center
Customer Service

Arizona:
2323 N. 27th Ave
Phoenix, AZ 85009
602-272-7916

California:
1931 "G" St
Fresno, CA 93706
209-233-3251

California (Northern):
3775 Seaport Blvd W
Sacramento, CA 95691
916-372-4600

California (Southern):
2121 E. Winston Rd
Anaheim, CA 92806
714-772-6060

Carolinas:
2120 Commerce Dr
Cayce, SC 29033
803-796-7965

Florida (Northern):
8226 Phillips Hwy.
Jacksonville, FL 32266
904-733-7750

Florida (Southern):
915 Chad Lane
Tampa, FL 33619
813-620-0621

Georgia:
2975 Evergreen Dr
Duluth, GA 30136
408-813-8145

Massachusetts:
9 Aegean Dr
Melhuen, MA 01844
508-685-3730

Mississippi:
2125 TV Rd
Jackson, MS 39204-7877
601-373-2622

Tennessee:
4836 Southridge Blvd
Memphis, TN 38115
901-362-1803

Texas:
1110 Hoelgen Ave
San Antonio, TX 78210
210-533-5131

Washington DC Area:
7721 Polk St
Landover, MD 20785
301-322-1100

Washington State:
710 132nd St, S.W.
Everett, WA 98204
206-743-3100

UPC 038703-03625
Case = 4 pkgs of 30 units
or
UPC 038703-03624
Case = 1 pkg of 60 units

6. Absorbent Pad. The Absorbent Pad absorbs wetness quickly and keeps liquid away from skin. Its soft, elastic gathers help provide a snug fit in the crotch area which prevents leakage. The pad is 10 x 3 x and 1/2 inch. Use of the Absorbent Pad is explained on the packaging.

NOTE

The absorbent pad is available through the following open-purchase source:

Proctor and Gamble Distribution Center
Military Customer Service Center
GH2Y-203
Cincinnati, OH 45202-3314

513-938-1080
Attn: Don Paddock

UPC 37000-68460
Case = 4 pkgs of 28 units

7. Belted Undergarment. The Belted Undergarment has flexible leg-gathers and a cupped shape design. The contoured pad provides a close comfortable fit with a thin core for moisture absorption. The undergarment is 16 1/2 x 4 1/2 x 1/4 inches. Use of the Belted Undergarment is explained on the packaging.

NOTE

The absorbent pad is available through the following open-purchase source:

Proctor and Gamble Distribution Center
Military Customer Service Center
GH2Y-203
Cincinnati, OH 45202-3314

513-983-1080
Attn: Don Paddock

UPC 37000-68456
1 pkg = 30 units
or
UPC 37000-06620
Case = 4 pkgs of 30 units

8. Freshette (figure 9-46). This reusable plastic funnel is intended for female use only. The Freshette is contoured to the female anatomy to provide a snug fit when urinating. A 5 1/2 inch tube is connected to the end of the funnel to transfer liquid into a containment device. In its closed configuration, the Freshette is approximately 5 3/4 x 2 1/2 x 1 1/4 inches. Use of the Freshette is explained on the packaging.

NOTE

The Freshette is available through the following open-purchase source:

Sani-Fem Company
ATTN: Marvin Ivie
P.O. Box 4117
Downey, CA 90241

800-542-5580
562-928-3435
FAX 562-862-4373

(UPC) 745338-00001

9. Lady J Adapter. This reusable plastic funnel is intended for female use. It is contoured to the female anatomy. The other end can be placed in an approved containment device such as the Relief Bag (MIL-B-83665) (figure 9-45) or Field Commode for urine collection. Use of the Lady J Adapter is explained on the packaging.

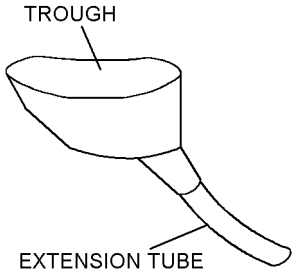

009046

Figure 9-46. Freshette

NOTE

The Lady J Adapter is available through the following open-purchase source:

Daytona Pilot Zone
1316 W. International Speedway Blvd.
Daytona Beach, Florida 32114
Voice: (386) 323-0885
Fax: (386) 323 0875
Toll Free (866) 917-4568
daytona pilotzone@yahoo.com

9-390. MAINTENANCE.

9-391. Maintenance of the Relief Systems is limited to Place-In-Service Inspection. Individual aircrew is responsible for maintenance after place-in-service. Maintenance shall be in accordance with manufacturers' instructions. Disposal of Relief Systems shall be in accordance with plastic waste disposal instructions. Treat used Relief Systems in the same manner as food contaminated plastic waste.

9-392. PLACE-IN-SERVICE INSPECTION. Place-In-Service inspection shall be a visual inspection for the following:

1. Holes
2. Tears/rips
3. Deterioration in item packaging

NOTE

If any discrepancies are found, dispose of item in accordance with paragraph 9-390 and replace the package.

9-393. SHELF LIFE. The shelf life of the Relief Systems is indefinite as long as the packaging passes Visual Inspection and there are no signs of exterior damage or deterioration.

Section 9-43. Deleted

Pages 9-58 thru 9-67 Deleted

Section 9-44. Pistol Holster, Leather (Optional Equipment)

9-401. DESCRIPTION.

9-402. The Pistol Holster, Leather (P/N 7791527, NIIN 00-973-2353) is optional equipment. The pistol holster is designed to carry the standard issue 9mm pistol. The holster has an attached adjustable shoulder and chest strap. It is designed to be worn under the left arm for a right handed release. It comes in black leather with black hardware.

9-403. CONFIGURATION.

9-404. The pistol holster (figure 9-52) has a built in adjustable shoulder and chest strap. The holster pocket which houses the pistol has a strap to secure the pistol and a strap to secure it to survival equipment.

9-405. APPLICATION.

9-406. The holster provides an optional means of carrying a 9mm pistol. The holster is authorized for use in all aircrew flight equipment configurations for rotary, fixed wing non-ejection and TACAIR communities. Procedures for donning the pistol holster are identified in the applicable maintenance manual for the specific aircrewmembers flight equipment configuration.

9-407. MAINTENANCE.

9-408. Maintenance shall be performed at organizational level and is limited to preflight and special inspections and repair of the leather tie.

NOTE

Failure of the pistol holster during Place-In-Service Inspection renders the item non-RFI and shall be reported in accordance with COMNAVAIRFORINST 4790.2. Record all maintenance actions in accordance with COMNAVAIRFORINST 4790.2.

9-409. PREFLIGHT INSPECTION. The Preflight Inspection is limited to a visual inspection of the assembly for security of straps, snaps, hardware and cracks in leather. Discrepancies shall be reported to maintenance personnel.

9-410. SPECIAL INSPECTION. A Special Inspection shall be performed at time of place-in-service and at intervals not to exceed 180 days. Refer to paragraph 9-413 for extended stowage of pistol holster. To perform the Special Inspection, proceed as follows:

CAUTION

Do not treat the leather with oil based products. These products will cause damage to flight gear and are hazardous around oxygen equipment.

1. Perform a visual inspection of assembly. Check for security of snaps and hardware.

2. Inspect for deterioration, contamination and cracks in leather.

3. Inspect leather adjusting ties, if necessary replace in accordance with paragraph 9-411.

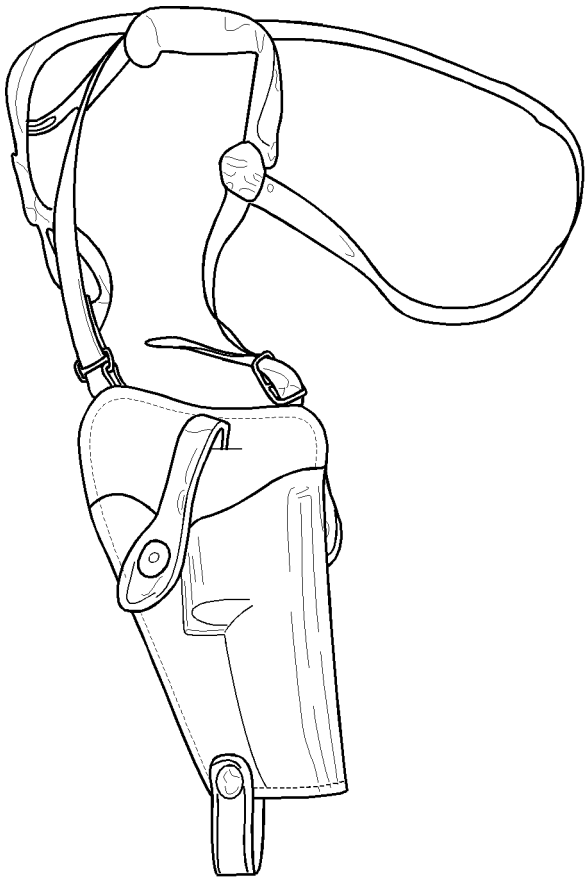

009052

Figure 9-52. Pistol Holster, Leather

9-411. REPAIR. Repairs are limited to the replacement of leather ties. All other discrepancies require replacement of pistol holster. To repair the leather ties, proceed as follows:

Materials Required

Quantity	Description	Reference Number
7 Inches	Nylon Cord, Type III	NIIN 00-240-2146

1. Remove broken leather tie.

2. Remove core strands from Type III nylon cord and sear ends.

3. Route the Type III in the same manner as the leather tie and tie off using a square knot. Secure ends together with an overhand knot.

9-412. STOWAGE.

9-413. When holster is no longer being used, it may be taken out of service and stored in a cool dry place away from direct sunlight. Do not store in extreme hot or cold environments for long periods of time. This will cause deterioration of leather.

Section 9-45. Manual Reverse Osmosis Desalinator

9-414. DESCRIPTION.

9-415. The Manual Reverse Osmosis Desalinator (MROD) is a hand-operated apparatus designed to convert seawater or brackish water into potable (drinkable) water. The non-potable water is drawn into the device and forced under high pressure through a semi-permeable membrane, which does not allow salt molecules, viruses or bacteria to pass through.

NOTE

The amount of bagged water currently stored in life raft accessory containers will be reduced from 10 oz to 4 oz per person, with the addition of the MROD device.

9-416. CONFIGURATION.

9-417. The Manual Reverse Osmosis Desalinator (CAGE OBJ61, NIIN 01-313-6086) consists of a cylindrical tube containing the semi-permeable membrane, an energy recovery pump, an operating handle, lanyard, and intake, reject and freshwater output hoses (figure 9-53). The MROD includes a nylon carry case with handle so the unit is portable in the event of a land based emergency.

9-418. APPLICATION.

9-419. The MROD is intended to provide downed aircrewmembers with drinkable water from a non-potable water source such as seawater or brackish water. The MROD is designed for one man operation and is capable of delivering 1.4 gallons/hr. of fresh water. The primary application is aviation liferafts. The MROD is stored in the accessory kit of all U.S. Navy multi-place liferafts and is tethered to the accessory kit case through the dual slider opening in its carry case.

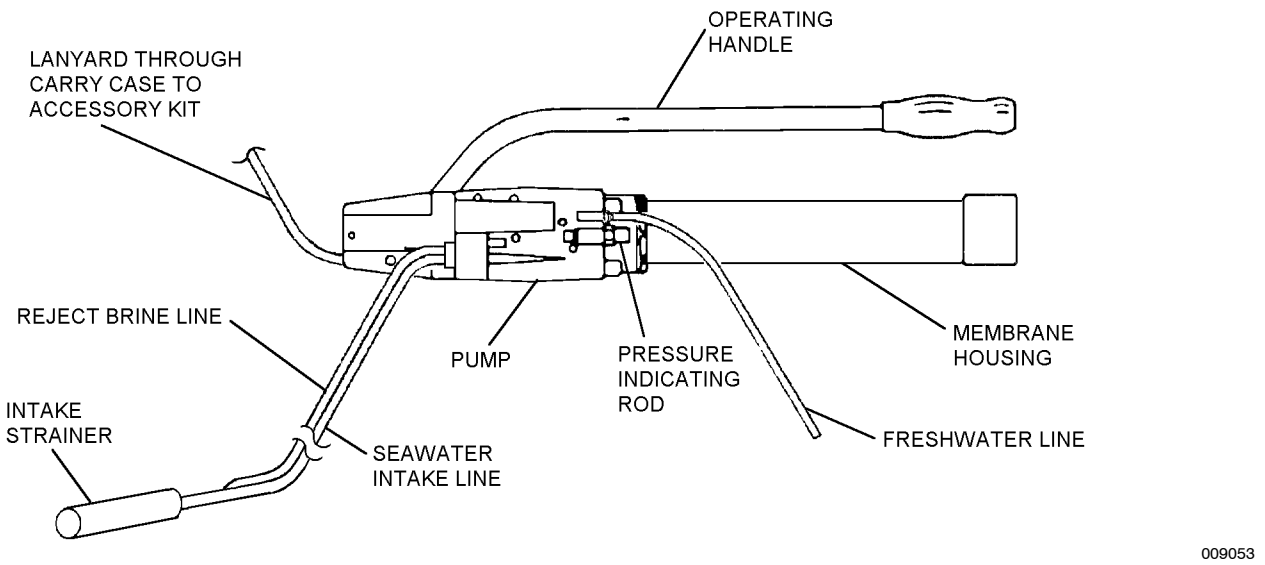

Figure 9-53. Manual Reverse Osmosis Desalinator

9-420. MAINTENANCE.

9-421. Maintenance shall be accomplished at Intermediate Level or above. The MROD shall be forwarded to the manufacturer for the scheduled 4 year and 8 year overhaul inspection. Costs shall be the responsibility of the local command. Refer to paragraph 9-424.

9-422. INSPECTION. The MROD shall be inspected at time of Place-In-Service, at intervals to coincide with the inspection cycle of the liferaft in which it is installed, and every four and eight years at the manufacturer for rework and overhaul. The four-year and eight-year expiration dates begin from the Date of Manufacture or Rework date. To inspect the MROD, proceed as follows:

NOTE

If the four-year or eight-year cycle comes due during a repack cycle, the MROD may remain in service until the next life raft inspection.

Refer to NAVAIR 13-1-6.1-1 for quantity of water required to be packed in addition to the MROD.

1. Inspect all hoses for holes, cracks, kinks, and obstructions.

2. Ensure all hoses are securely attached to the membrane housing and intake strainer.

3. Exercise operating handle two full cycles to ensure it is secure and moves freely.

4. Inspect membrane housing for major dents or cracks.

5. Inspect lanyard for cuts and frays. Remove snap hook and tie an overhand knot in end of lanyard. If lanyard is damaged, replace with a 48-inch length of Type III nylon cord.

6. Inspect carry case for damage.

7. Remove Air Force T. O. manual and warranty label. Discard or retain for local reference.

9-423. PACKING PROCEDURES. Place MROD in carrying case and fake hoses. Run lanyard out the corner of the carrying case and close dual slide fastener around lanyard. Attach the other end of the lanyard to the accessory container as directed by NAVAIR 13-1-6.1-1.

9-424. REPAIR.

NOTE

Local repairs are not authorized on the MROD. Unit must be replaced or forwarded to manufacturer for repair. Shipping and repair costs shall be the responsibility of local command.

Katadyn North America Inc.
9850 N 51st Ave
Plymouth, MN 55442
(800) 755-6701

9-425. Repairs on the carrying case are limited to the patching of minor tears, and the stitching of broken or frayed stitches. Broken plastic fasteners can be removed provided slide fastener is operable. Unlimited repairs are authorized. There is currently no replacement for the carrying case.

Section 9-46. Passenger Helicopter Aircrew Breathing Device System

9-426. GENERAL.

9-427. The Passenger Helicopter Aircrew Breathing Device (PHABD) System is authorized for use on the LPU-32/P, LPP-1/1A and Pouch Type Preserver (PTP) for Marine troop passengers during flights over water. The Passenger Helicopter Aircrew Breathing Device System consists of a holster (figure 9-54) and a SRU-40A/P or SRU-40B/P Helicopter Aircrew Breathing Device (HABD). The system provides breathable air to assist a passenger in the event of a mishap over water. The holster consists of a sleeve that securely holds the HABD. The sleeve includes snaps which allow the holster to be easily fastened to the life preserver.

WARNING

Training in the function and use of the Helicopter Aircrew Breathing Device (HABD) shall be accomplished and documented prior to use.

9-428. FABRICATION OF PHABD HOLSTER.

NOTE

The quantity of holsters for initial outfitting will be manufactured under contract and delivered to predesignated MEUs. All future holsters will be locally manufactured in accordance with paragraph 9-430.

9-429. PHABD holsters shall be fabricated at Intermediate level maintenance facilities. To fabricate the PHABD holster, proceed as follows:

Materials Required

Quantity	Description	Reference Number
AR	Thread, Nylon, Size E	V-T-295 NIIN 00-616-0079
AR	Nylon, Vinyl Coated	MIL-C-20696 NIIN 00-616-0022
6 inches	Fastener Tape, Hook, 1 inch	MIL-F-21840 NIIN 00-106-5973
6 inches	Fastener Tape, Pile, 1 inch	MIL-F-21840 NIIN 00-106-5974

Materials Required (Cont)

Quantity	Description	Reference Number
2 inches	Fastener Tape, Hook, 2 inch	MIL-F-21840 NIIN 00-450-9837
2 inches	Fastener Tape, Pile, 2 inch	MIL-F-21840 NIIN 00-405-2265
18 inches	Webbing, Textile, 1 inch, Type 17	MIL-W-4088 NIIN 00-260-6906
3	Caps	MS27983-1 NIIN 00-891-9073
3	Sockets	MS27983-2 NIIN 00-945-2577
3	Studs	MS27983-3 NIIN 00-276-4908
3	Eyelets	MS27983-4 NIIN 00-276-4978
1	Strap, Tie Down	MIL-S-23190 NIIN 00-111-3208
1	Grommets, Size 00	MS20230B20 NIIN 00-291-0302
1	Helicopter Aircrew Breathing Device (HABD) SRU-40A/P or SRU-40B/P	1586AS301-2 or 1586AS301-3

9-430. FABRICATION OF THE HOLSTER BACK PANEL. To fabricate the holster back panel (figure 9-55), proceed as follows:

NOTE

Sear all cut edges of nylon webbing to prevent fraying. Do not form sharp edges. Unless otherwise specified, all machine stitching shall be in accordance with ASTM-D-6193, type 301 lockstitch, 8 to 10 stitches per inch, back stitch 3/4 inch minimum. All hems will be single fold unless otherwise specified. All stitching shall be 1/8 inch from edge unless otherwise specified.

1. Measure and cut a 2 1/2 x 11-inch piece of vinyl coated nylon.

2. On both of the 11-inch sides and on one of the 2 1/2-inch sides, single fold the edges by 3/8 inch and sew in place with a single row of stitches.

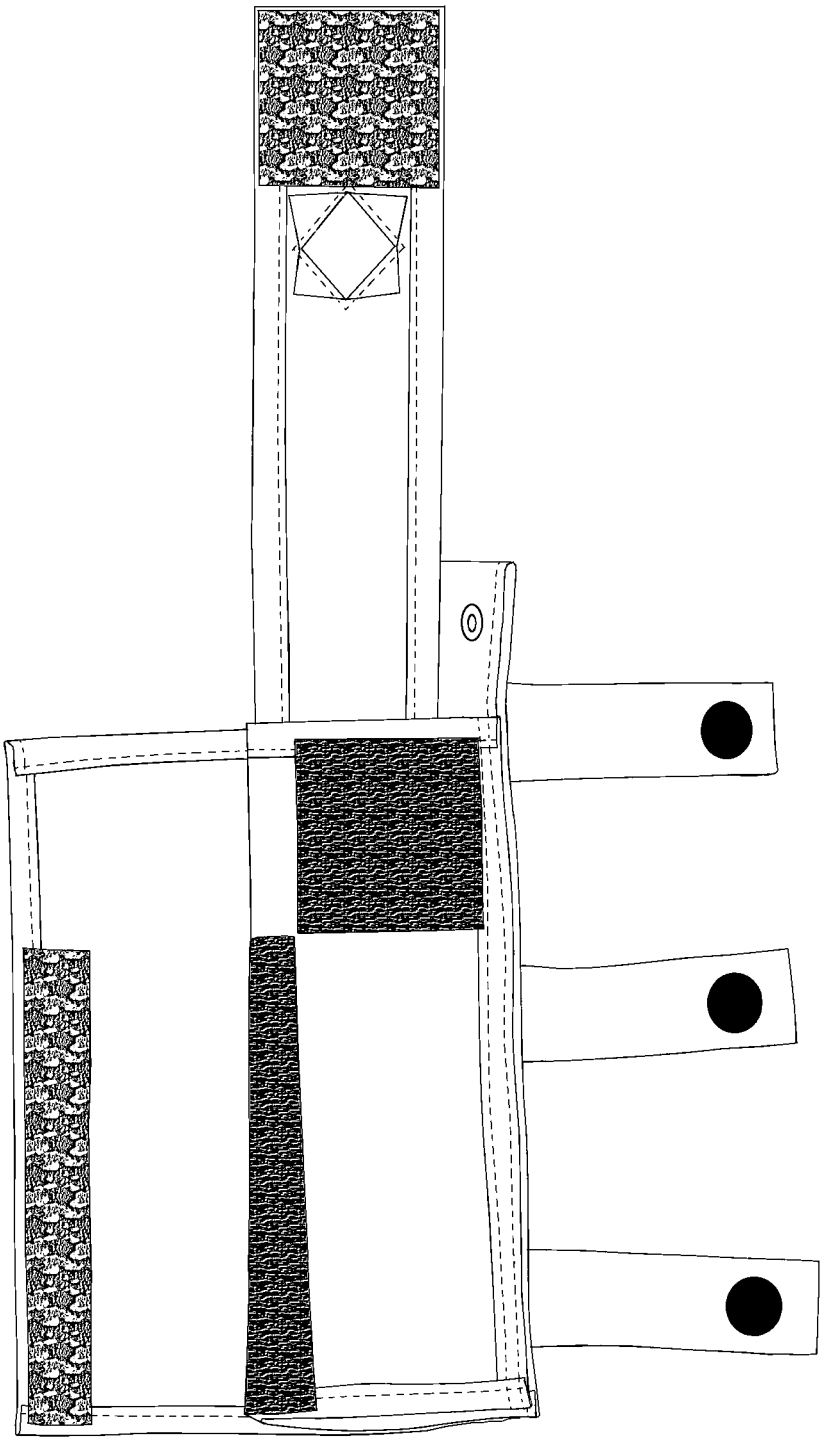

009054

Figure 9-54. Passenger Helicopter Aircrew Breathing Device (PHABD) Holster

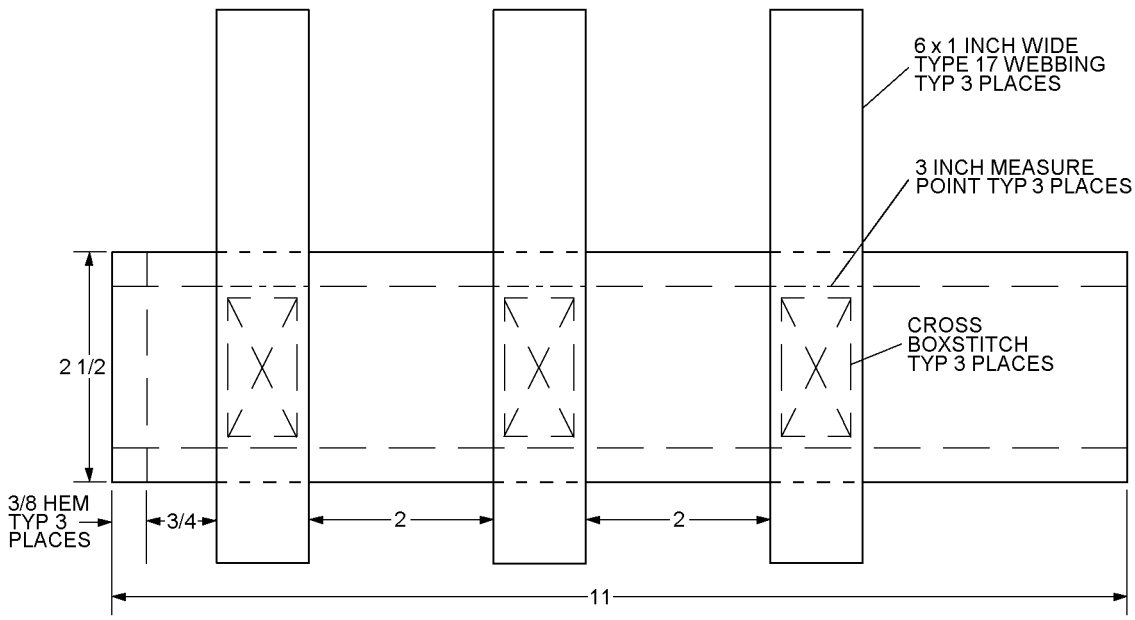

009055

Figure 9-55. Holster Back Panel

3. Turn back panel over so that the hem edges are face down and the unsewn side is on the right. Starting from the left side, measure and mark the back panel along the top and bottom sides at 3/4 inch, 1 3/4 inches, 3 3/4 inches, 4 3/4 inches, 6 3/4 inches, and 7 3/4 inches. Draw vertical placement lines by connecting each corresponding top and bottom mark.

4. Measure and cut three, 6-inch lengths of 1-inch wide Type 17 webbing.

5. Mark the 3-inch middle of each length of webbing with a line.

6. Keeping the unsewn side of the back panel to the right, place the 6-inch lengths of webbing on the back panel between the 3/4 inch and 1 3/4 inch, the 3 3/4 inch and 4 3/4 inch, and the 6 3/4 inch and 7 3/4 inch vertical placement lines so that the 3 inch center line on the webbing is even with the top edge of the back panel. Sew the webbings in place with a centered 3/4 x 1 1/4-inch cross boxstitch.

9-431. FABRICATION OF THE BOTTLE/HOSE PANEL. To fabricate the bottle/hose panel (figure 9-56), proceed as follows:

1. Cut an 8 x 13-inch piece of vinyl coated nylon fabric.

2. Single fold the edges by 3/8 inch and sew a hem on all four sides of the fabric.

3. Turn fabric over so that the hemmed edges are facing down and the shorter sides are on the left and right. Measure and mark the top and bottom sides at their 6 1/8-inch centers. Draw a line connecting the 6 1/8-inch marks to create a fold line.

4. Measure and mark regulator flap placement marks at 1/2 inch and 2 5/8 inches to the left of the center fold line along the topside of the fabric.

5. Turn fabric over so that the side with the fold line and regulator flap placement marks are face down, and the edge with the regulator flap placement marks is now the top right edge. Measure and mark 5 inches up from the bottom left-hand corner along the left side of the fabric.

6. Cut a 5-inch length of 1-inch wide pile tape.

7. Place the length of pile tape along the left-hand side of the fabric from the bottom left-hand corner to the 5 inch mark. Sew pile tape in place with a boxstitch.

8. From the bottom right-hand corner, measure and mark 2 3/8 inches and 3 3/8 inches to the left along the bottom edge of the fabric.

9. Measure and mark 5 inches up from the bottom right-hand corner along the right side.

10. At the 5-inch mark, measure and mark 2 3/8 inches and 3 3/8 inches to the left.

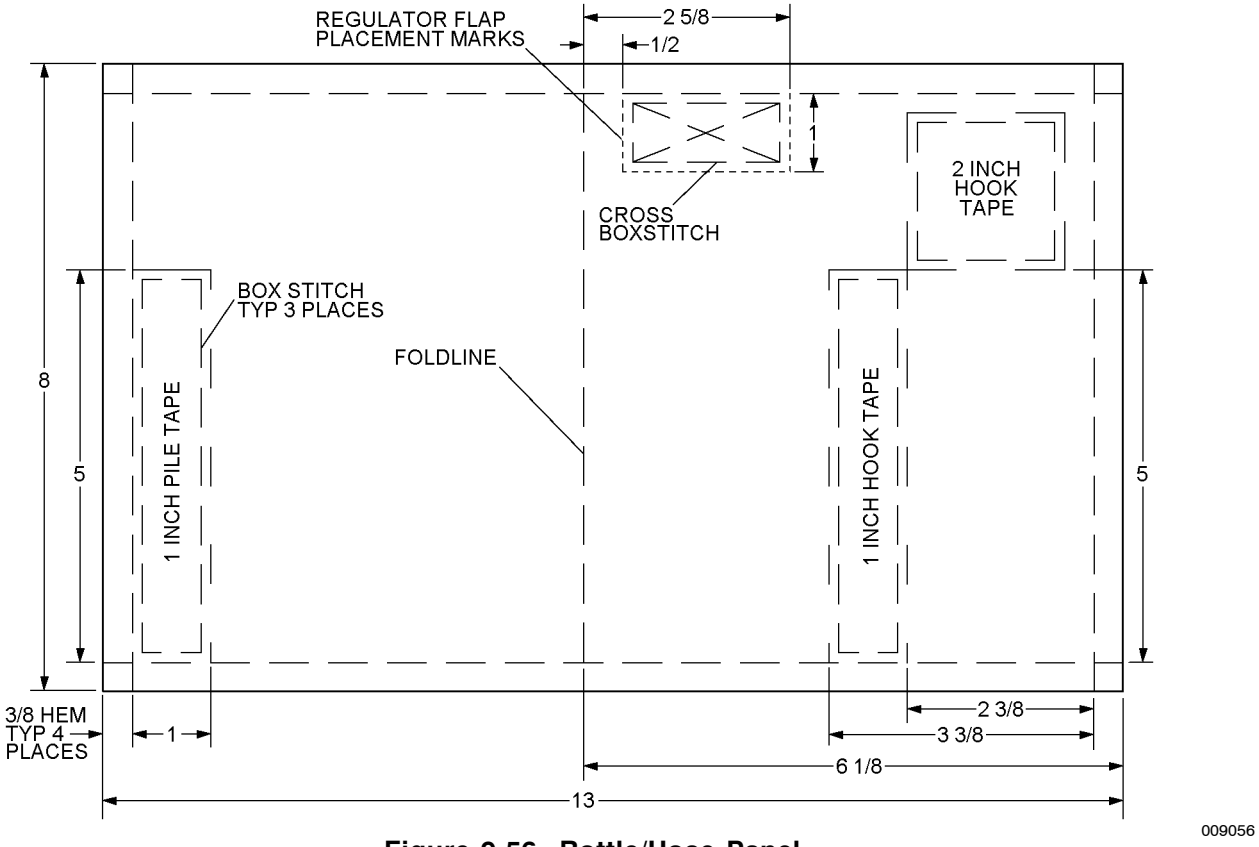

Figure 9-56. Bottle/Hose Panel

11. Cut a 5-inch length of 1-inch wide hook tape.

12. Place the hook tape between the two 2 3/8-inch and the two 3 3/8-inch marks. Sew hook tape in place with a boxstitch.

13. Starting from the top right-hand corner, measure and mark 1/4 inches and 2 1/4 inches down along the right side of the fabric.

14. Cut a 2-inch length of 2-inch wide hook tape.

15. Place the hook tape on the fabric between the 1/4-inch and 2 1/4-inch marks and 3/8 inches to the left of the right-hand finished edge of the fabric so that the bottom left-hand corner of the 2-inch hook tape approximately meets the top right-hand corner of the 1-inch hook tape. Sew the hook tape in place with a boxstitch.

9-432. FABRICATION OF THE REGULATOR FLAP. To fabricate the regulator flap (figure 9-57), proceed as follows:

1. Cut a 9 1/2 x 2 7/8-inch piece of vinyl coated nylon fabric.

2. Single fold the edges by 3/8 inch and sew a hem on the 9 1/2-inch sides of the fabric and on one of the 2 7/8-inch sides.

3. Place the fabric so that the unhemmed side is on the left and the hemmed edges are face up. From the top right-hand corner, measure and mark 3 inches to the left on the topside of the fabric. From the bottom right-hand corner, measure 3 inches and mark to the left on the bottom side of the fabric. Draw a vertical line across the width of the fabric to connect the two 3-inch marks.

4. Along each 2 1/8-inch side of the fabric, measure and mark the middle of each side at 1 1/16 inches. Draw a line to connect the 1 1/16-inch marks.

5. From the point where the two lines intersect on the 2 1/8-inch line, measure and mark cut point (a) at 9/16 inches up from the intersection and cut point (b) at 9/16 inches down from the intersection. On the 9 1/8-inch line, measure and mark cut point (c) at 5/8 inches to the left of the intersection and cut point (d) at 5/8 inches to the right of the intersection.

6. Make a 1 1/8-inch cut in the fabric by cutting from cut point (a) to cut point (b). Make a 1 1/4-inch cut in the fabric by cutting from cut point (c) to cut point (d).

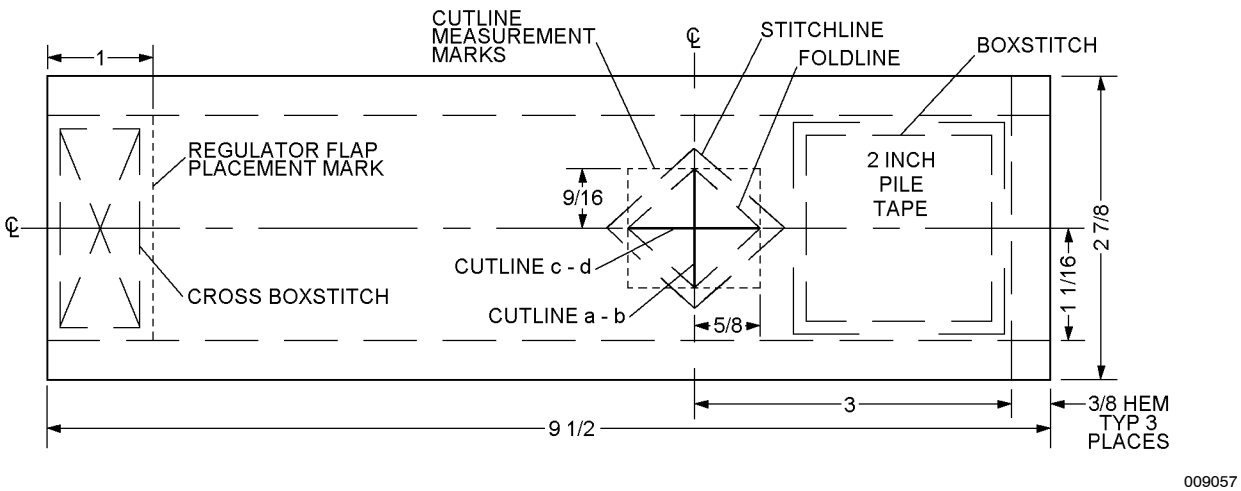

Figure 9-57. Regulator Flap

7. With the fabric positioned so that the hemmed edges are facing up, fold back the four triangular cuts and sew them in place 1/8 inches from folded edge, forming a diamond shaped opening.

8. Cut a 2-inch length of 2-inch wide pile tape.

9. With the hemmed edges facing up and the unsewn edge to the left, place the pile tape on the fabric so that it is even with the right side of the fabric. Sew pile tape in place with a boxstitch.

10. From the unhemmed side, measure and mark 1 inch along the topside and 1 inch along the bottom side.

9-433. ASSEMBLY OF HOLSTER. To assemble the holster, proceed as follows**:**

1. Place bottle/hose panel with hook and pile tapes facing down. With the pile tape side of the regulator flap facing up, place the regulator flap between the regulator flap placement marks on the bottle/hose panel, aligning the 1-inch marks so that they are even with the finished edge of the bottle/hose panel and the 1-inch unhemmed edge of the regulator flap overlaps the bottle/hose panel. Sew flap in place with a 3/4 x 1 3/4-inch cross boxstitch.

2. Position the back panel so that the long sides are at the top and bottom, the unhemmed side is on the right, the hemmed edges are facing up and the webbing straps are flat.

3. Fold bottle/hose panel at fold line so that the line is visible on the outside. Place folded bottle/hose panel on the left edge of the back panel so that the fold line aligns with the top edge of the back panel and the side with the hook tape is facing up.

4. Fold the unhemmed side of the back panel to meet the right hand folded corner of the bottle/hose panel. Sew the folded edge of the bottle/hose panel to the back panel and the folded back panel portion in place with two rows of stitches side by side that run from the top left hand corner to the top right hand corner of the back panel.

5. Mate the 5-inch hook tape with the 5-inch pile tape. Position the assembly so that the regulator flap is on the right side and the webbing straps are flat. Align the bottom flap of the bottle/hose panel with the bottom edge of the back panel so that the bottom left corners meet. Sew the bottom edge of the bottle/hose panel to the back panel with two rows of stitches side by side that run from the bottom left hand corner of the bottle/hose panel to the bottom right hand corner of the back panel.

6. Position the assembly so that the side with the webbing is facing up, the webbing straps are vertical and the regulator flap is on the right. From the bottom right corner of the back panel, measure 1/2 inch to the left along the bottom edge and 1/2 inch up and mark. Cut hole at mark and set a 00 grommet in the hole.

7. To set snaps, position assembly as in the last step. Measure and mark on center of webbing weave line 3/4 inch in on all (6) ends of the webbing straps. Cut holes at each of the six marks.

8. Set studs and eyelets in the short end facing away from the bottle/hose panel.

9. Set caps and sockets on the long end of the webbing straps so the lock tabs are centered on the webbing weave line and on the side closest to the back panel, and set caps underneath with dots opposite the lock tabs.

9-434. ATTACHMENT OF HABD MOUTHPIECE COVER TO PHABD HOLSTER. To attach the HABD mouthpiece cover, proceed as follows:

1. Pass the tie down strap through the center of the mouthpiece cover and through the 00 grommet on the holster.

2. Tighten the tie down strap until the mouthpiece cover touches the back panel of the holster.

3. Cut off excess strap.

9-435. ATTACHMENT OF PHABD HOLSTER TO LIFE PRESERVER.

9-436. ATTACHMENT OF PHABD HOLSTER TO THE LPU-32/P LIFE PRESERVER. To attach the PHABD holster to the LPU-32/P Life Preserver, proceed as follows:

1. Place the LPU-32/P on a flat clean surface so that the collar is on the top, the survival items pouch is on the bottom and the nylon buckle is on the left. Place the regulator flap end of the PHABD holster on the left and the open end on the right. Place the PHABD holster assembly over the waist belt assembly of the LPU-32/P so that the leftmost snap strap is between the right side of the nylon buckle and the left side of the webbing loop that runs from the bottom of the zipper to the loop around the survival items pouch.

2. Loop the leftmost snap strap around the waist belt assembly and snap in place.

3. Position the middle snap strap of the PHABD holster so that it is between the right side of the webbing loop below the zipper and the nylon slide. Loop the middle strap around the waist belt assembly and snap in place.

4. Loop the rightmost snap strap of the PHABD holster around the waist belt assembly and snap in place.

9-437. ATTACHMENT OF PHABD HOLSTER TO THE LPP-1 (36H1336-1), OR LPP-1A (68A94D2-1). To attach the PHABD holster to the LPP-1 (36H1336-1), or LPP-1A (68A94D2-1), proceed as follows:

1. Remove dye marker, MIL-S-17980, and pouch assembly, P/N 68A94D5-1, and store for future use.

2. Place the preserver on a flat clean surface so that the collar is on the top, the belt assembly is on the bottom and the side with the oral inflation tube is facing up. Position the preserver's belt assembly flat so that the hook end of the buckle is on the right and the clasp end is on the left.

NOTE

The middle snap strap of the PHABD holster assembly is not used on the LPP-1 or LPP-1A.

3. Snap the middle strap together to eliminate loose ends.

4. Place the regulator flap end of the PHABD holster on the left and the open end on the right. Place the PHABD holster assembly over the belt assembly of the preserver so that the leftmost snap strap of the PHABD holster assembly is to the left of the belt loop of the preserver and the rightmost snap strap is to the right of the belt loop.

5. Snap leftmost and rightmost straps in place around the belt assembly.

9-438. ATTACHMENT OF PHABD HOLSTER TO THE POUCH TYPE PRESERVER (PTP). To attach the PHABD holster to the PTP, proceed as follows:

1. Remove hoisting strap.

2. Remove the signaling whistle lanyard from the belt assembly and reattach signaling whistle lanyard to the oral inflation tube loop using a bowline knot. Accordion fold whistle lanyard. Secure whistle and lanyard to the oral inflation tube between the oral inflation tube loop and the base of the oral inflation tube by looping a rubber band around the oral inflation tube, the folded lanyard and the mouthpiece end of the whistle.

3. Remove dye marker, MIL-S-17980, and pouch assembly, P/N 68A94D5-1, and store for future use.

4. Reinstall hoisting strap in accordance with NAVAIR 13-1-6.1-2.

5. Place the preserver on a flat clean surface so that the collar is on the top, the belt assembly is on the bottom and the side with the oral inflation tube is facing up. Position the preserver's belt assembly flat so that the hook end of the buckle is on the right and the clasp end is on the left.

6. Open inflation assembly protective flap. Accordion fold the lifeline and toggle in lengths equal to length of CO_2 bottle. Secure folded lanyard with a rubber band. Place folded lanyard on the preserver above the CO_2 bottle. Ensure that no part of the lanyard is near the CO_2 inflation valve. Close inflation assembly protective flap and secure snaps.

NOTE

The middle snap strap of the PHABD holster assembly is not used on the PTP.

7. Snap the middle strap together to eliminate loose ends.

8. Place the regulator flap end of the PHABD holster on the left and the open end on the right. Place the PHABD holster assembly over the belt assembly of the preserver so that the leftmost snap strap of the PHABD holster assembly is to the left of the belt loop of the preserver and the rightmost snap strap is to the right of the belt loop.

9. Snap leftmost and rightmost straps in place around the belt assembly.

9-439. STOWING OF HABD IN THE PHABD HOLSTER.

WARNING

The SRU-40A/P or B/P Helicopter Aircrew Breathing Device (HABD) must be pre-flight inspected in accordance with paragraph 9-446 prior to use.

9-440. Ensure the SRU-40A/P or -40B/P HABD has been pre-flight inspected in accordance with paragraph 9-446. Place the HABD cylinder in the holster sleeve and secure top flap over first stage regulator. Ensure pressure gage is positioned through the opening on flap and secure hook and pile fastener. Route the regulator hose down alongside the cylinder sleeve of the holster in a single U shaped loop. Fold the hose panel over the hose and secure the hook and pile fastener. Place regulator mouthpiece inside mouthpiece cover and position the mouthpiece so that the mouthpiece faces towards the belt assembly and the regulator purge cover faces outwards away from the belt assembly.

9-441. MAINTENANCE.

9-442. Maintenance procedures shall be performed by Organizational level maintenance unless otherwise specified. All maintenance actions and inspections shall be documented in accordance with COMNAVAIRFORINST 4790.2. Maintenance of the PHABD holster is limited to inspection and minor repairs. All maintenance of the HABD shall be accomplished in accordance with Chapter 16 of this manual.

9-443. INSPECTION. The inspection of the PHABD system shall consist of a Place-In-Service Inspection, 90-Day/360-Day Special Inspections and Pre-Flight, Post-Flight Inspections.

9-444. Place-In-Service Inspection, PHABD Holster. To perform the Place-In-Service Inspection, proceed as follows:

NOTE

Failure of a commercially procured holster during the Place-In-Service Inspection renders the holster non-RFI and must be reported in accordance with COMNAVAIRFORINST 4790.2.

1. Visually inspect the holster for loose stitching, fastener tape, cuts or tears.

2. Perform a fit check to verify the HABD cylinder fits inside the holster's sleeve.

3. Perform a functional check of the attaching snaps.

9-445. Place-In-Service Inspection, SRU-40A/P and B/P. The Place-In-Service Inspection for the HABD shall be accomplished at Intermediate level maintenance in accordance with Chapter 16 of this manual.

9-446. Pre-Flight Inspection, PHABD System. The Pre-Flight Inspection shall be accomplished on both the HABD and holster by the Crew Chief prior to the first flight of the day. To perform the Pre-Flight Inspection, proceed as follows:

WARNING

Proper handling of the HABD should be adhered to at all times to prevent damage to the unit. Mishandling of HABD may cause rupture of cylinder, or separation or breakage of components resulting in the cylinder becoming a projectile, which could cause serious injury or death.

1. Perform the Pre-Flight Inspection on the HABD as follows:

a. Visually inspect the HABD for evidence of malfunction, external damage, and corrosion.

b. Inspect mouthpiece for cuts, cracks, cleanliness and overall integrity.

c. Carefully inspect the hose to ensure it is securely connected to both the first and second-stage regulators. Inspect the hose for cuts, cracks, blisters, abrasions, or other damage and inspect the fittings for corrosion.

WARNING

If cylinder rotates more than one complete turn while turning to the ON position, STOP TURNING CYLINDER and immediately report malfunction to maintenance personnel. Continuing to rotate cylinder may cause separation of the cylinder from the first-stage regulator subassembly resulting in the cylinder becoming a projectile, which could cause serious injury or death.

d. While holding the first-stage regulator securely, slowly turn the HABD cylinder counter-clockwise until the ON/OFF indicator pin can be sighted through the small aperture marked ON.

e. Examine the pressure gage to determine if the cylinder is ready-for-issue. The pressure gage should read in the green zone (2700 to 3000 psi). After ensuring that the system is full, listen for any obvious signs of leakage from the system, including free flow from the second-stage regulator. Report any discrepancies to maintenance personnel immediately.

f. Quickly press and release the purge button on the second-stage regulator. A short burst of air should escape when the button is depressed and stop when it is released. Listen to ensure airflow has stopped.

g. Inspect purge cover to ensure that torque sealant is present. If not, have maintenance personnel check purge cover for tightness and re-apply torque sealant.

h. Report any discrepancies to maintenance personnel.

i. If no discrepancies have been noted, the HABD shall remain in the ON position for the duration of the day's flights.

2. Perform the Pre-Flight Inspection on the PHABD holster as follows:

a. Inspect holster material for wear and contamination.

b. Inspect holster for loose or broken stitches.

WARNING

Missing snaps shall be considered a FOD hazard and a thorough FOD inspection should be conducted prior to the flight.

c. Inspect hook and pile fastener tape and snaps for security.

d. Inspect snaps for corrosion.

e. Report any discrepancies to maintenance personnel.

9-447. Passenger Pre-Flight Inspection. Each passenger shall accomplish the Passenger Pre-Flight Inspection prior to each flight as follows:

WARNING

Any discrepancies noted shall be reported immediately to the Crew Chief. Failure to ensure PHABD system is securely attached or pressure gage is not in the green zone could result in loss of life or failure of the PHABD system.

1. Ensure PHABD system is securely attached to the life preserver by checking snaps for security. Missing snaps shall be reported immediately to the Crew Chief.

2. Ensure HABD is on and pressurized by visually identifying that the indicator pin is in the ON aperture and the gage needle is reading in the green zone (2700 to 3000 psi).

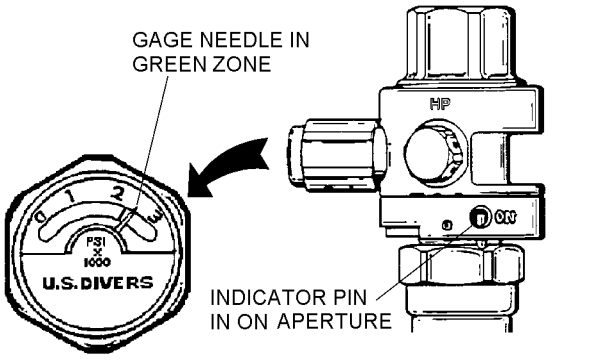

Step 2 - Para 9-447

9-448. Post-Flight Inspection, PHABD System. The Post-Flight Inspection shall be accomplished on both the HABD and the holster at the end of the last flight of the day by the Crew Chief. To perform the Post-Flight Inspection, proceed as follows:

1. Perform the Post-Flight Inspection on the HABD as follows:

CAUTION

When turning the HABD off, do not over-tighten. Over-tightening may damage regulator or indicator pin.

a. Ensure pressure gage reads in the green zone (2700 to 3000 psi) before turning off HABD.

NOTE

Temperature changes affect the pressure in the HABD. If gage needle reads to the lower end of the green zone (2700 psi), the HABD may be topped-off to ensure enough pressure will be available for the next day's flights. Top-off HABD in accordance with Chapter 16 of this manual.

b. Turn the HABD off by securely holding the first-stage regulator and slowly rotating the unit's cylinder clockwise until the indicator pin is in the OFF position. Do not over-tighten. Depress the purge button on the second-stage regulator to completely depressurize the hose and second-stage regulator. Wait at least five minutes and depress the purge button again to determine if pressure has built up inside the hose and second-stage regulator. If build up of air pressure occurs the HABD must be routed to the Intermediate level maintenance for repair.

c. Inspect HABD components for signs of damage.

d. Report any discrepancies to maintenance personnel.

2. Perform the Post-Flight Inspection on the PHABD holster as follows:

a. Inspect holster material for wear and contamination.

b. Inspect holster for loose or broken stitches.

c. Inspect snaps for security.

d. Report any discrepancies to maintenance personnel.

9-449. Special Inspection (90-Day and 360-Day). The 90-Day and 360-Day Special Inspections shall be performed on the PHABD system by qualified Aircrew Survival Equipmentmen (PR/6060). Perform inspections as follows:

NOTE

The 90-Day and 360-Day Special Inspections on the HABD shall be performed in accordance with Chapter 16 of this manual. Inspection of the life preserver shall be in accordance with the NAVAIR 13-1-6.1-2.

The complete PHABD system shall be forwarded to AIMD for the 360-Day Special Inspection. Perform the 360-Day Special inspection on holster in accordance with steps 4 thru 9.

1. Remove PHABD system from life preserver. If required, forward the life preserver to Intermediate level maintenance for inspection.

2. Remove the HABD from the holster.

3. Perform 90-Day or 360-Day Special Inspection on HABD in accordance with Chapter 16.

4. Inspect holster material and webbing for wear and contamination.

5. Inspect holster for cuts, tears, and loose or broken stitches. Broken or loose stitching shall be repaired by restitching using the same type stitch and stitches per inch as the original stitching.

NOTE

No more than three stitching repairs on any one area on the holster are authorized.

6. Inspect snaps for security of attachment, corrosion and ease of operation. Defective or missing snap fasteners may be replaced as necessary.

7. Inspect hook and pile fastener tape for attachment, wear and ease of operation. Repair or replace hook and pile fastener tape as necessary.

8. Deficient holsters shall be removed from service and replaced with a new holster.

9. Record inspection date and data on appropriate forms in accordance with COMNAVAIRFORINST 4790.2.

Section 9-47. Theater Specific (Hot and Cold Weather) Survival Kits

9-450. DESCRIPTION.

9-451. Theater Specific (Hot and Cold Weather) Survival Kits are designed to supplement the current Individual Aircrewmember's Survival Kit SRU-31/P and SRU-31A/P in extreme hot and cold weather environments. The kits will be authorized for use at the discretion of the Type Commander depending on mission requirements.

9-452. CONFIGURATION.

9-453. Theater Specific (Hot and Cold Weather) Survival Kits will be locally manufactured and consist of a single pouch with the items listed in tables 9-7 and 9-8.

9-454. APPLICATION.

9-455. Theater Specific (Hot and Cold Weather) Survival Kits are configured for survival vest application only.

NOTE

Theater Specific Kits shall not be considered part of the authorized 5 lbs of optional equipment as stated in NAVAIR 13-1-6.7-2.

9-456. MAINTENANCE.

9-457. Maintenance shall be performed by Organizational Level maintenance or above. Kits are subjected to Preflight and Special 90-Day inspections to coincide with the inspection cycle of the survival vest.

9-458. SPECIAL INSPECTION. The Special Preflight inspection shall consist of a visual inspection performed by the aircrewmember prior to each flight. Aircrewmember shall report any discrepancies to maintenance personnel. The 90-Day inspection shall consist of a visual inspection with the repair or replacement of contents as listed in tables 9-7 and 9-8.

Table 9-7. Theater Specific (Cold Weather) Survival Kit

Item	Quantity	Source/NIIN	Inspection
Pouch	1 ea	Local Manufacture refer to paragraph 9-459	1. Repair rips, tears or broken stitches. 2. Replace velcro as necessary. 3. Replace pouch as necessary.
4 x 4 Plastic Bag (for use with candles)	1 ea	NIIN 00-837-7753	1. Replace as necessary.
Fire Starting Tool, Magnesium	1 ea	NIIN 01-160-5618 or Campmor 28 Parkway, Box 700 Upper Saddle River, NJ 07458 (800) 525-4784 P/N 23131	1. Replace as necessary.
Hand Warmers	3 pr	NIIN 01-395-3018 or Grabber 4600 Danvers Dr SE Grand Rapids, MI 49512 (800) 423-1233 P/N G-28	1. Inspect outer package for holes. 2. Inspect validity date (expiration date) on package. 3. Replace as necessary.
Blanket, Cocoon, Olive Drab/Silver	1 ea	Survivor Industries, Inc. 2585 Azurite Circle Newbury Park, CA 91320 (800) 263-6818 www.survivorind.com P/N CC-02	1. Inspect outer packaging for tears and holes. 2. Replace as necessary.

Table 9-7. Theater Specific (Cold Weather) Survival Kit (Cont)

Item	Quantity	Source/NIIN	Inspection
Candles (tea light), Non-scented (Note 1)	2 ea	Campmor 28 Parkway, Box 700 Upper Saddle River, NJ 07458 (800) 525-4784 P/N 80355 or locally purchase	1. Inspect for leaking or melting. 2. Replace as necessary.
Protective Spectacles	1 pr	Bernell 4016 N. Home St Mishawaka, IN 46545-4308 (800) 348-2225 P/N NOPMS	1. Inspect for tearing, scratches. 2. Replace as necessary.
Notes: 1. Store candles in 4 x 4 plastic bag to prevent leakage.			

Table 9-8. Theater Specific (Hot Weather) Survival Kit

Item	Quantity	Source/NIIN	Inspection
Pouch	1 ea	Local Manufacture refer to paragraph 9-459	1. Repair rips, tears or broken stitches. 2. Replace velcro as necessary. 3. Replace pouch as necessary.
4 x 4 Plastic Bag (for use with Sunsect)	1 ea	NIIN 00-837-7753	1. Replace as necessary.
6 x 6 Plastic Bag (for use with mosquito headnet and mittens)	1 ea	NIIN 00-837-7754	1. Replace as necessary.
Sunsect Sunscreen 0.3 oz packets (Note 1)	3 ea	NIIN 01-452-9582	1. Inspect for leaking. 2. Replace as necessary. 3. No expiration date.
Mosquito Headnet/ mittens (Note 2)	1 ea	NIIN 01-192-2357	1. Inspect for rips and tears. 2. Replace as necessary.
Protective Spectacles	1 pr	Bernell 4016 N. Home St Mishawaka, IN 46545-4308 (800) 348-2225 P/N NOPMS	1. Inspect for tearing and scratches on lens. 2. Replace as necessary
Bagged Water (125 ml pouch)	2 ea	NIIN 01-124-4543 or Survivor Industries, Inc 2585 Azurite Circle Newbury Park, CA 91320 (800) 263-6818 www.survivorind.com	1. Inspect for leaking. 2. Check expiration date. 3. Replace as necessary.
Notes: 1. Place packets of Sunsect in 4 x 4 plastic bag to prevent leakage. 2. Repackage mosquito headnet/mittens into flat configuration and store in 6 x 6 plastic bag.			

9-459. FABRICATION OF EQUIPMENT POUCH. To make the equipment pouch, proceed as follows:

Materials Required

Quantity	Description	Reference Number
As Required	Cloth, Coated Herculite, Green	MIL-C-20696 NIIN 00-616-0022
As Required	Thread, Nylon Size E	V-T-295 NIIN 00-616-0079
As Required	Fastener, Tape, Hook, 1 inch	MIL-F-21840 NIIN 00-106-5973
As Required	Fastener ,Tape, Pile, 1 inch	MIL-F-21840 NIIN 00-106-5974
1	Grommet, Metallic, Size 00	MS20230B20 NIIN 00-291-0302

NOTE

All stitching shall be Type 301 lockstitch, 8 to 10 stitches per inch. Backstitch minimum 1/2 inch.

1. Cut a 6 1/2-inch x 15-inch piece of material.

2. Turn each 6 1/2-inch end down 1/4 inch and sew.

3. Cut a 6 1/2-inch strip of 1-inch hook tape and a 6 1/2 inch strip of 1-inch pile tape.

4. With 1/4-inch seams facing up, place the hook tape 1/4 inch down from folded sewn end and sew the hook tape in place. This will become the top flap of pouch.

5. Turn material over. On opposite end from hook tape, place the pile tape 1/4 inch down from folded sewn end and sew pile tape in place.

6. Turn materials back over so hook tape is on top and facing up, mark a line 3 inches down from the 1/4-inch fold. Fold bottom of material up to the 3-inch line and sew completely around the perimeter of the material forming a pouch with flap.

7. With pouch opening facing up and flap open, make a mark on the inside of pouch, 2 1/2 inches down from top of flap and 3/4 inch in from right side of flap. Cut hole at mark and set “00” grommet.

8. Mark the front of the pouch identifying which type of Theater Specific Kit (Hot or Cold) the kit is. Use black permanent marker and 1/2-inch letters.

9-460. STOWAGE OF EQUIPMENT. Stow equipment in pouch as follows:

a. Stow equipment as compact as possible and close velcro flap.

b. Using a 48-inch piece of Type I nylon cord, secure one end to the grommet on pouch using a bowline knot and the other to the survival vest.

c. Record all maintenance actions on appropriate form in accordance with COMNAVAIRFORINST 4790.2.

NOTE

Theater Specific Survival Kit location will vary according to survival vest configuration.

CHAPTER 10

SEARCH AND RESCUE KIT

Section 10-1. Description

10-1. GENERAL.

NOTE

New procurements of the seven-man liferaft will be designated LRU-13/A. Reference to the designation MK-7 has been deleted throughout this chapter, however, all procedures and requirements referenced in this chapter pertaining to the LRU-13/A also apply to the MK-7 liferaft.

10-2. The Search and Rescue (SAR) Kit is made to be dropped from an aircraft to survivors at sea. It has two LRU-13/A liferafts packed into containers and an equipment container complete with survival equipment (figure 10-1).

10-3. CONFIGURATION.

10-4. SAR Kit configuration number 1648AS999 is a fleet manufactured item, therefore no part number is assigned to the final assembly. Supply personnel may assign a local part number for tracking purposes. The SAR Kit liferaft and equipment containers are made of nylon duck cloth and sewn with nylon thread. Each liferaft is packed in a special individual container. The survival equipment container has a pouch on each side capable of holding approximately 500 feet of 3/8-inch polypropylene (yellow) line. Two 25-foot lengths of nylon cord are used as static lines. One end has a spring clip for attachment to aircraft structure; the other end is made into a bowline and loop for attachment to actuating

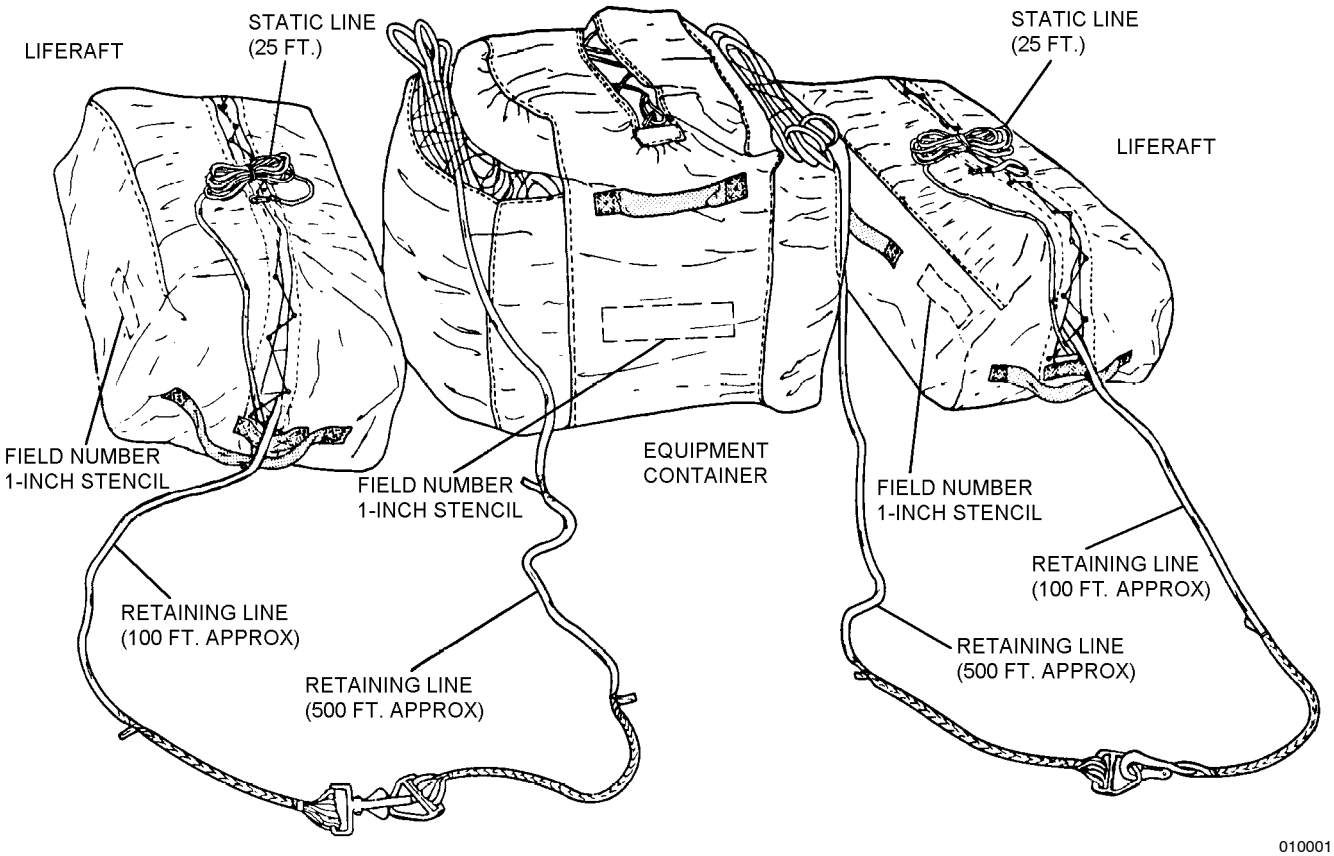

Figure 10-1. SAR Kit

cable snaphook. The basic survival items packed in the SAR Kit are listed in table 10-1. These items are intended to support 14 survivors. The quantity and type of survival items may be varied at the discretion of the Area Commander to suit operational environment.

10-5. APPLICATION.

10-6. The SAR Kit is intended to be dropped from a P-3, C-130, or C-2 aircraft engaged in search and rescue missions to survivors of air crashes and ship accidents. Refer to applicable aircraft NATOPS for deployment procedures.

WARNING

Failure to don and attach the CREW RESTRAINT HARNESS to the aircraft could result in either falling or being pulled from the aircraft.

10-7. FUNCTION.

10-8. When the command to drop the SAR Kit is obtained, the following operations take place:

1. Attach the two liferaft static lines (nylon cord with spring clip) to aircraft.

2. Connect the two yellow retaining lines from the equipment container (v-rings), to the two yellow retaining lines of the liferafts (snaphooks).

Table 10-1. Survival Equipment For SAR Kit

Description	Quantity	Reference Number
Liferaft, LRU-13/A (Note 1)	2	62A82H2-101
Sea Anchor (Note 2)	2	MIL-A-3339
Signaling Mirror	2	NIIN 00-261-9772
Distress Signal, MK-124	12	NIIN 01-030-8330
Bagged Water	14/42	NIIN 01-124-4543
General Purpose First Aid Kit (Rigid)	2	NIIN 00-922-1200
Air Hand Pump	2	NIIN 00-028-9406
Rations	14	NIIN 00-097-4580
Whistle	2	NIIN 00-254-8803
Combat Casualty Blanket	4	NIIN 00-935-6665
Anti-Chap Lipstick	4	NIIN 01-436-0607
GND/AIR Emergency Code Card	6	(Note 3)
Compass	2	NIIN 01-444-2955
Sunburn Preventative	1	NIIN 01-121-2336
Sea Dye Marker	12	NIIN 00-270-9986
Distress Marker Light (Note 4)	2	NIIN 01-411-8535
Sponge (5 x 3 compressed)	4	NIIN 00-240-2559
Pocket Knife	2	NIIN 00-162-2205
Water Storage Bag (5 Qt)	14	NIIN 00-485-3034

Notes:
1. Newly procured LRU-13/A liferafts will come with sea anchors attached. They must be removed at the sea anchor mooring patch and placed, with the sea anchor mooring line, into the survival equipment container.
2. Due to low demand, Sea Anchors may not be stocked. They may be purchased from the following source: Patton Co., 1803 Madrid Ave. Lake Worth, FL (561) 588-8500.
3. GND/AIR Emergency Code Card may be duplicated in accordance with Section 9-9 of this manual.
4. SDU-5/E can be used until no longer passes inspection, then replace with SDU-39/N Distress Marker Light.

3. The first LRU-13/A liferaft is pushed from the aircraft.

4. The survival equipment container is pushed from the aircraft immediately following the first liferaft.

5. The second LRU-13/A liferaft is pushed from the aircraft following the survival equipment container. Both liferafts are automatically inflated by means of a static line which is attached to the liferaft inflation valve and the aircraft.

10-9. REFERENCE NUMBERS, ITEMS AND SUPPLY DATA.

10-10. For information relating to reference numbers, items and supply data for SAR Kit, refer to table 10-2.

Table 10-2. Supply Data

Description	Reference Number
Liferaft	62A82H2-101 LRU-13/A
Liferaft Container	—
Equipment Container	—
Retainer Line (See Note)	NIIN 01-315-7456, P/N P1424YELLOW

Notes:
1. Retaining lines for the SAR Kit are made from 8 carrier spliceable hollow braid polypropylene line. Color yellow. Line is manufactured in 500 ft lengths and shall be spliced as indicated in figure 10-10 for required 1000 ft retaining line.
2. Total length needed for the retaining lines is approximately 1200 ft. Tolerance for length of retaining lines is 20 percent (figures 10-1 and 10-10).

Section 10-2. Modification

10-11. GENERAL.

10-12. There are no current directives affecting the SAR Kit. Repair and fabrication instructions to maintain serviceability are listed in table 10-3.

Table 10-3. SAR Kit Repairs and Fabrications

Description of Repairs or Fabrications	Application	Paragraph
Fabrication of Liferaft Container	All SAR LRU-13/A Containers	10-19
Fabrication of Equipment Container	All SAR Equipment Containers	10-20

Section 10-3. Maintenance

10-13. GENERAL.

10-14. Maintenance or repair operations are performed by Intermediate Level or above unless otherwise specified. All SAR Kits shall be subjected to Preflight, Special, and Calendar Inspections.

10-15. INSPECTION.

10-16. PREFLIGHT INSPECTION. The Preflight Inspection is a Visual Inspection performed by the flight crew prior to each flight daily and consists of the following:

1. Inspect for completeness of SAR Kit.

2. Inspect security of closures.

10-17. SPECIAL INSPECTION. The Special Inspection is a Visual Inspection performed by Organizational Level every 30 days and consists of the following:

1. Inspect for rips, tears, stains, and loose or frayed stitching on containers.

2. Inspect actuator cable housing for nicks, dents and burrs.

3. Inspect lines for condition of wear, fraying and security of splices.

4. Inspect for loose, broken or missing grommets.

5. Check snaphooks for cracks, corrosion and ease of operation.

6. Inspect static line for condition.

7. Inspect visible retaining lines for condition.

8. Inspect PCU-17/P Crew Restraint Harness System (P/N 68J420-101) for proper configuration in accordance with NAVAIR 13-1-6.2.

9. The fleet manufactured SAR Kit (configuration number 1648AS999) shall be inspected to ensure configuration is in accordance with paragraph 10-3.

10-18. CALENDAR INSPECTION. The Calendar Inspection shall be performed at the Intermediate Level at intervals not to exceed 225 days. The inspection shall consist of Preflight and Special Inspection requirements (paragraphs 10-16 and 10-17), a functional and Leakage Test on the liferafts, as well as the following:

NOTE

A functional test shall be performed prior to placing in service or during aircraft Acceptance Inspection, and each fourth inspection cycle thereafter. A Leakage Test shall be performed at each inspection cycle.

1. Inspect liferafts in accordance with NAVAIR 13-1-6.1-1.

2. Unpack equipment container.

3. Inspect survival items in accordance with Chapter 9.

4. Inspect SAR Kit for proper rigging and packing in accordance with paragraph 10-23.

10-19. FABRICATION.

10-20. FABRICATION OF THE LIFERAFT CONTAINER. To fabricate the liferaft container, proceed as follows:

Materials Required

Quantity	Description	Reference Number
As Required	Cloth, Duck, Nylon Type II, Olive Drab	MIL-C-7219 NIIN 00-765-2863
As Required	Webbing, Textile, Reinforcing Nylon Type IV, 1-Inch	MIL-T-5038 NIIN 00-261-8579
As Required	Thread, Nylon Type II, Class A, Size E	V-T-295 NIIN 00-244-0609
25	Grommet and Washer Assembly Size 00	MS20230B20 NIIN 00-291-0302

1. Fabrication of Top Panel. To make the top panel, refer to figure 10-2 and proceed as follows:

a. Cut and sear nylon duck cloth 15 1/2 x 44 inches.

b. Cut and sear 1-inch nylon webbing into two 5 1/2-inch pieces and one 13-inch piece.

c. From a corner of the top panel, measure along the 15 1/2-inch edges 7 3/4 inches to the center of the panel and in 3 inches from the 15 1/2-inch edge. Starting at this point cut a slit 38 inches long parallel to the 44-inch edge. At each end of the slit cut a 1 1/2-inch slit perpendicular to and centered on the 38-inch slit to form a rectangular opening as shown in figure 10-2, Section C-C.

d. Take two 5 1/2-inch lengths of 1-inch nylon webbing and fold each end under 1 3/8 inches to butt at the mid-point. Lay the folded webbing, one piece at each end of the 38-inch rectangular opening, centered and flush with the narrow side, and stitch in place with a 3/4 x 2 1/2-inch boxstitch as in figure 10-2, Sections A-A and B-B.

e. Take a 13-inch piece of 1-inch wide tape, turn each cut end under 1 1/4 inches and place it 2 inches in from the narrow side and 2 7/8 inches in from each long side of the top panel. Stitch end folded end of the tape in place with a 3/4 x 1-inch boxstitch as shown in figure 10-2, Section A-A.

f. Measure 3 7/16 inches in from each 15 1/2-inch edge of the top panel and place four grommets (MS20230B20), one at each corner, centered on each hem of the rectangular opening. From the 15 1/2-inch edge of the panel with the handle attached, measure in

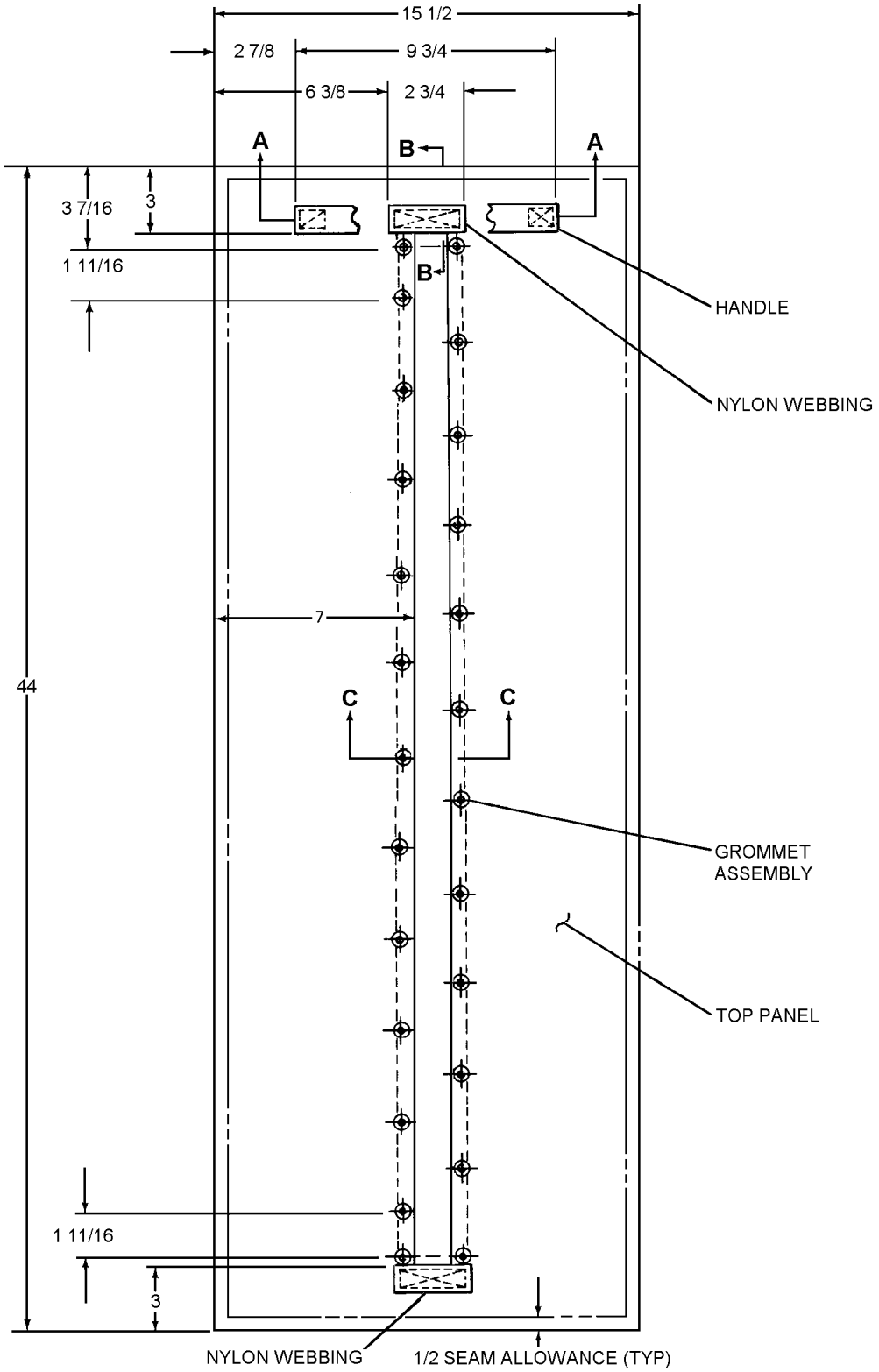

01000201

Figure 10-2. Top Panel Assembly, LRU-13/A Liferaft Container (Sheet 1 of 2)

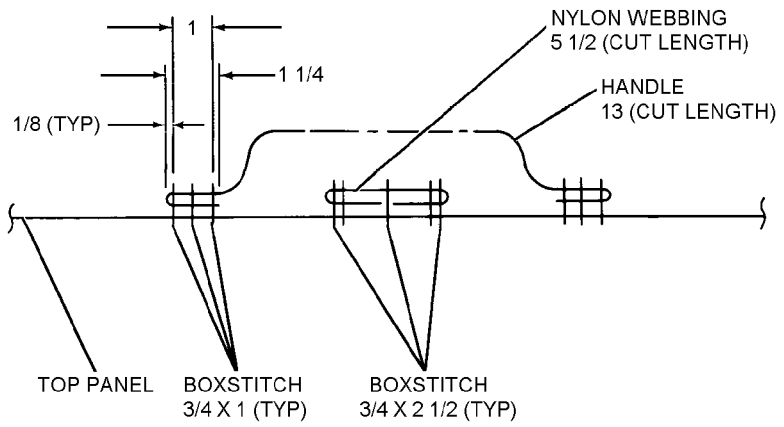

SECTION A-A

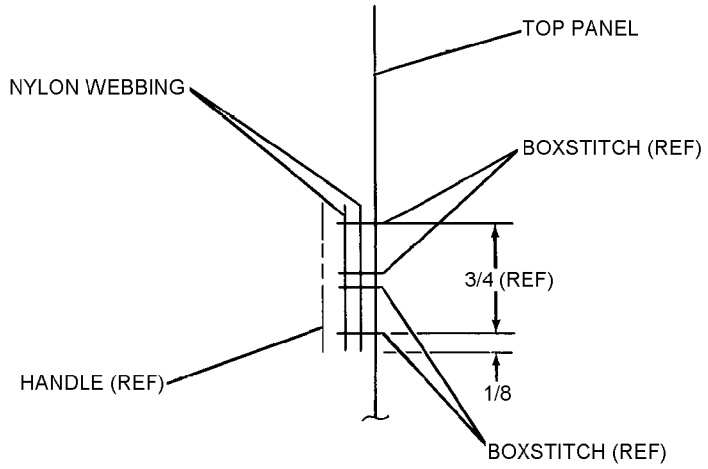

SECTION B-B

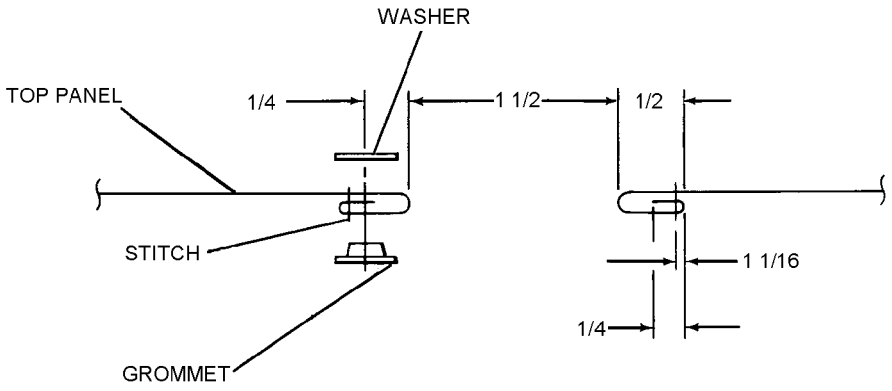

SECTION C-C

01000202

Figure 10-2. Top Panel Assembly, LRU-13/A Liferaft Container (Sheet 2 of 2)

5 1/8 inches on one hem and 6 13/16 inches on the other hem. Place a grommet at each location centered on the hem. Starting with the grommet located at 6 13/16 inches, place nine grommets centered on the hem 3 3/8 inches apart. Starting with the grommet located at 5 1/8 inches, place ten grommets centered on the hem, 3 3/8 inches apart to effect a staggered pattern as shown in figure 10-2.

2. Febrication of Bottom Panel. To make the bottom panel, refer to figure 10-3 and proceed as follows:

a. Cut and sear 1-inch nylon webbing into two 13-inch pieces.

b. Take the two 13-inch cut lengths of webbing and fold the cut ends under 1 1/4 inches to form handles, and place on the bottom panel. Locate the handles 2 1/2 inches in from the 30-inch edges and 10 1/8 inches in from each 29 1/2-inch edge and stitch each folded end in place with a 3/4 x 1-inch boxstitch as shown in figure 10-3, Section A-A.

3. Attaching Top and Bottom Panels Together. To attach the top and bottom panels together, refer to figure 10-4 and proceed as follows:

a. Place the top panel assembly with the handle side up. Center the bottom panel assembly on the top panel assembly with the handles facing down and the 30-inch edges of the bottom panel assembly mating with the 44-inch edges of the top panel assembly. Stitch in place 1/2 inch in from the mating edges. Turn the free ends of the top panel assembly upward in order to mate the three raw edges of the top panel assembly with the corresponding raw edges of the 29 1/2-inch sides of the bottom panel assembly. Stitch 1/2 inch in along the mating edges.

b. Turn the assembled liferaft container right-side-out and stitch 1/16 inch in on all sides of the bottom panel assembly catching the seam allowance as shown in figure 10-4, Sections A-A, B-B and C-C.

10-21. FABRICATION OF EQUIPMENT CONTAINER.

1. To make the equipment container for the SAR kit, proceed as follows:

Materials Required

Quantity	Description	Reference Number
As Required	Cloth, Duck, Nylon Type II, Olive Drab	MIL-C-7219 NIIN 00-765-2863

Materials Required (Cont)

Quantity	Description	Reference Number
As Required	Webbing Textile, Reinforcing Nylon Type IV, 1-Inch	MIL-T-5038 NIIN 00-261-8579
As Required	Webbing Textile, Reinforcing Nylon Type IV, 1 1/2-Inch	MIL-T-5038 NIIN 00-263-2472
As Required	Thread, Nylon Type II, Class A, Size E	V-T-295 NIIN 00-244-0609
12	Grommet and Washer Assembly Size 0	MS20230B10 NIIN 00-231-6589
2	Grommet and Washer Assembly Size 4	MS20230B4 NIIN 00-231-6591

1. Fabrication of Top Panel and Side Panels. To make the top panel, refer to figures 10-5, 10-6, and 10-7 and proceed as follows:

a. Cut and sear nylon duck cloth into a top panel 13 x 55 3/4 inches, a side panel 15 3/4 x 53 inches, and 2 additional side panels, 5 x 49 1/4 inches.

b. Cut and sear 1-inch nylon webbing into two pieces, 5 inches long and 1 piece, 37 1/2 inches long.

c. Cut and sear 1 1/2-inch nylon webbing into two pieces, 10 1/4 inches long.

d. From a corner of the top panel, measure 6 1/2 inches to the center of the panel and in 20 1/2 inches from the 13-inch edge. Starting at this point, cut a slit 14 3/4 inches long, parallel to the 55 3/4-inch edge. At each end of the slit, cut a 1 1/2-inch slit perpendicular to, and centered on, the 14 3/4-inch slit. Fold each side of the 14 3/4-inch slit 1/4 and 1/2 inch under. Stitch 1/8 inch in on the 1/2-inch fold to form a rectangular opening as shown in figure 10-5, Section A-A.

e. Take two 5-inch lengths of 1-inch nylon webbing, and fold each end under 1 1/4 inches to butt at the mid-point. Lay the folded webbing, one piece at each end of the 14 3/4-inch rectangular opening, centered on and flush with the narrow edge. Stitch in place with a 3/4 x 2 1/4-inch boxstitch as in figure 10-5, Sections B-B and C-C.

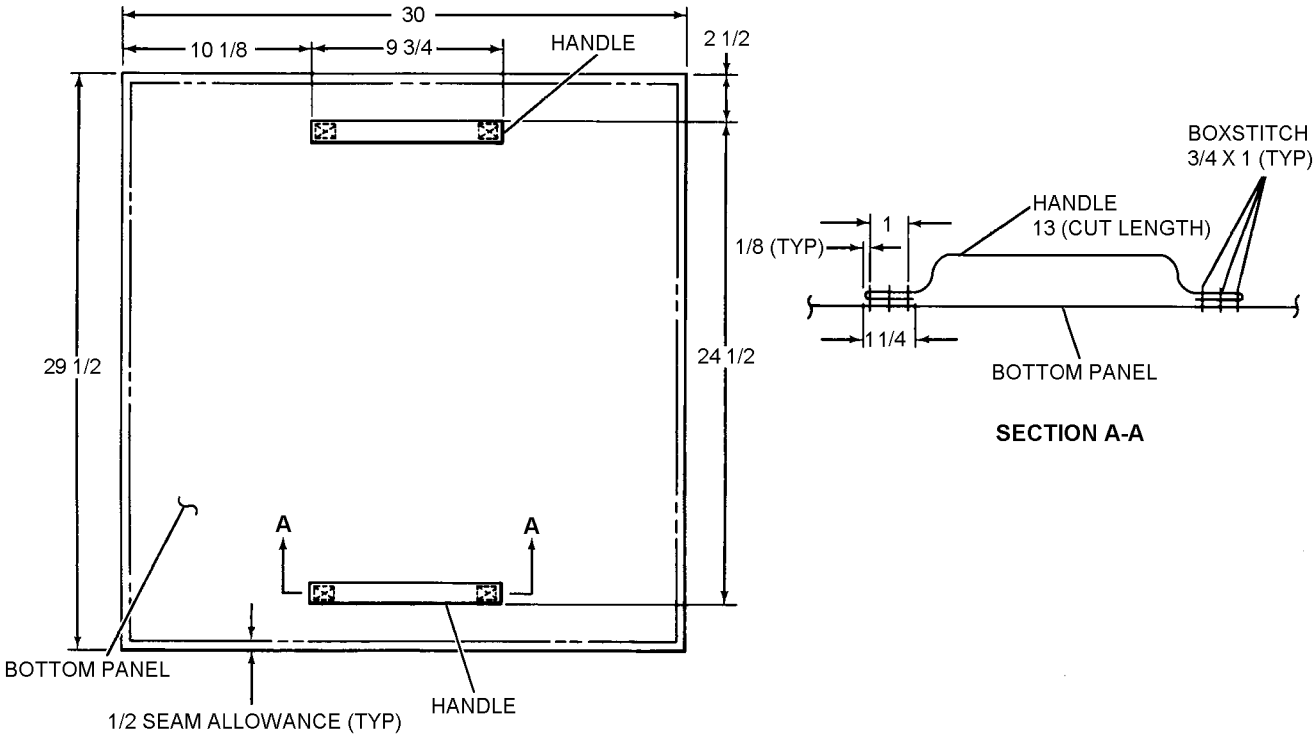

Figure 10-3. Bottom Panel Assembly, LRU-13/A Liferaft Container

f. Cut a 45 degree bias on each end of the 37 1/2-inch webbing to form an elongated parallelogram. Turn the top panel over, and place the 37 1/2-inch piece of webbing around the rectangular opening, starting 1 1/2 inches beyond the narrow end, and extending 1/2 inch into the opening along the long sides only, as shown in Figure 10-5, Section A-A and Figure 10-6.

g. When placing the tape around the narrow ends of the opening, form loops, one of which will be formed by bringing the bias cut ends to coincide. The tape location at these ends shall be 1/2-inch away from the opening, as shown in Figure 10-5, Section B-B and Figure 10-6, detail B.

h. Stitch all around 1/8-inch in on the sides away from the opening. On the 14 3/4-inch sides of the rectangle, place an additional single row of stitches 3/16 inch from the previous stitching, as shown in Figure 10-5, Section A-A.

i. On each narrow side of the rectangular opening, place a row of stitches 1/8 and 1/2 inch in from the opening catching both legs and the loop of the tape, as shown in Figure 10-6, detail B.

j. Take two pieces of 1 1/2-inch wide nylon webbing 10 1/4 inches long. Turn a 1/4-inch hem 5 1/2 inches long centered on each of the 10 1/4-inch sides of the tape. Stitch in 1/16 and 1/8 inch as shown in Figure 10-6, Section A-A to form the handles.

k. Place the handle assemblies 17 inches in from the narrow sides and 2 1/4 inches in from each long side of the top panel. Sew the handles in place with a box stitch 1 1/4 x 1 1/4 inches, as shown in Figure 10-5, Section D-D.

l. From each 13-inch side of the panel, measure 21 inches and place two grommets (MS20230B10), one on each side of the rectangular opening, 3/8 inch in from the opening, as shown in Figure 10-6, detail A.

m. Starting with these two grommets, place five additional grommets on each side of the opening 2 3/4 inches apart, as shown in Figure 10-5.

n. Place the top panel assembly with the handle side up. Center the side panel on the top panel assembly with the 15 3/4-inch edges of the side panel, mating with the 55 3/4-inch edges of the top panel assembly. Stitch in place 1/2 inch in from the mating edges. Turn the free ends of the top panel assembly upward in order to mate the three raw edges of the top panel assembly with the corresponding raw edges of the 53-inch side of the side panel, and stitch 1/2 inch in along the mating edges as shown in Figure 10-7.

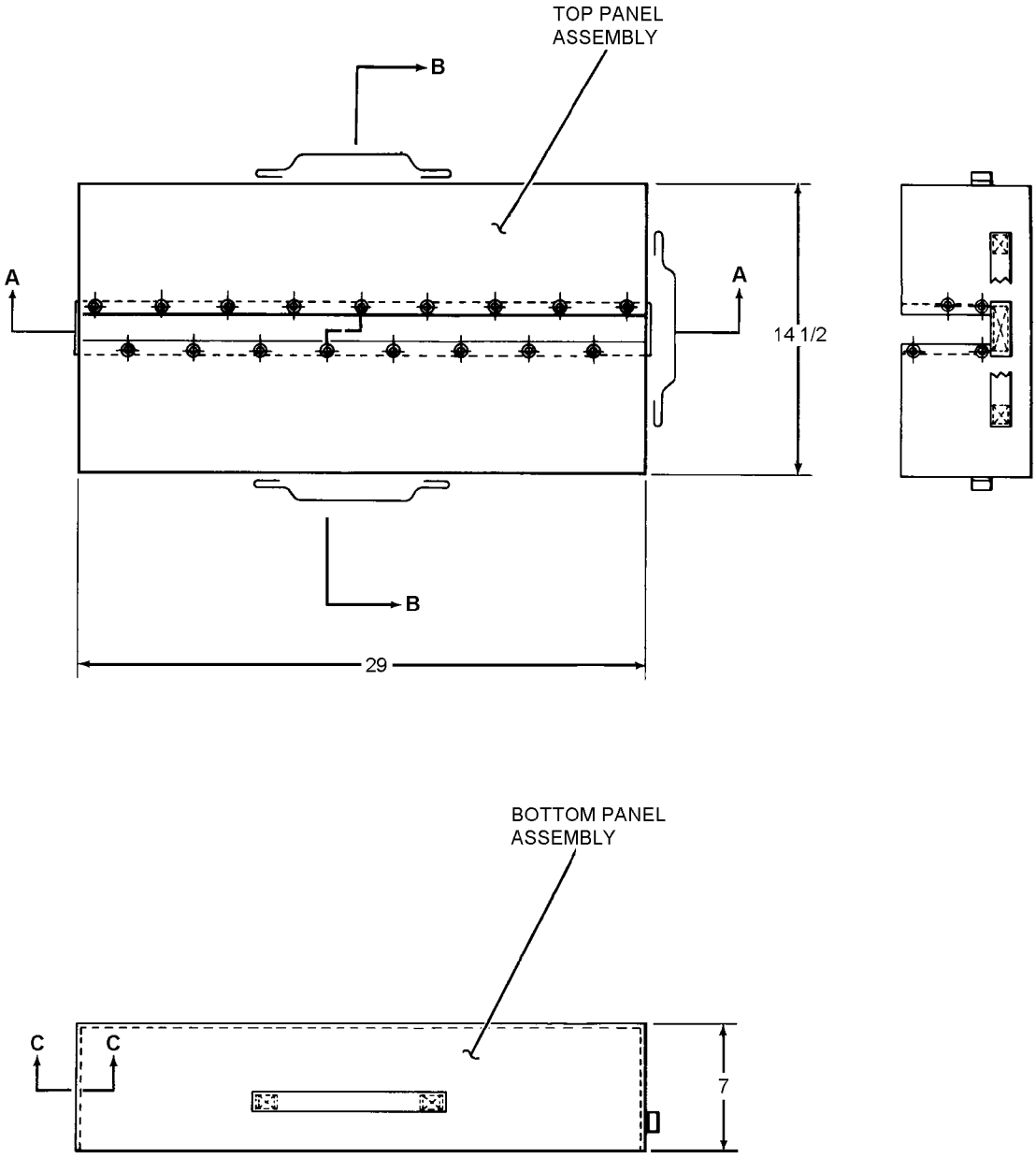

01000401

Figure 10-4. LRU-13/A Liferaft Container, P-3 SAR Kit (Sheet 1 of 2)

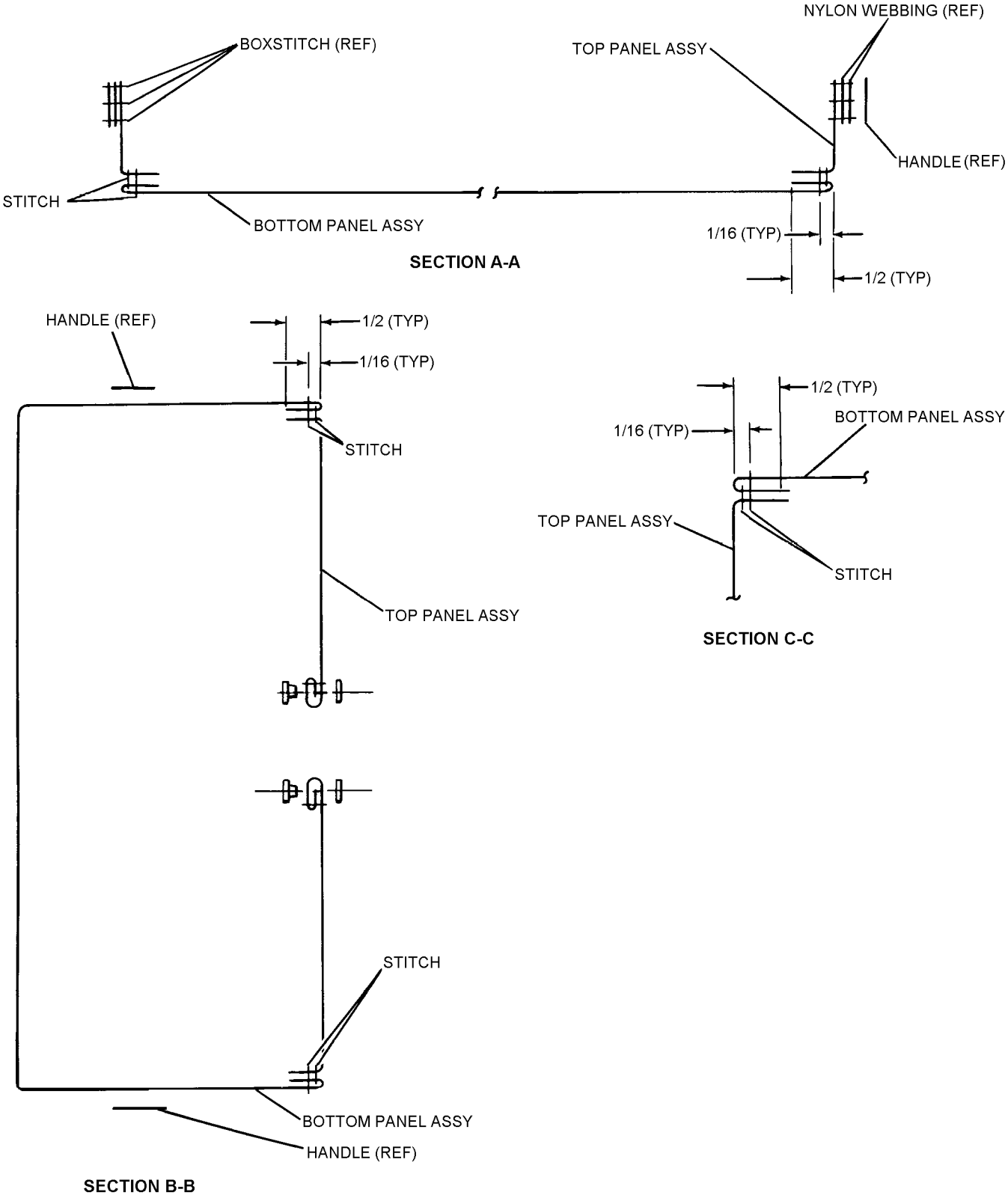

01000402

Figure 10-4. LRU-13/A Liferaft Container, P-3 SAR Kit (Sheet 2 of 2)

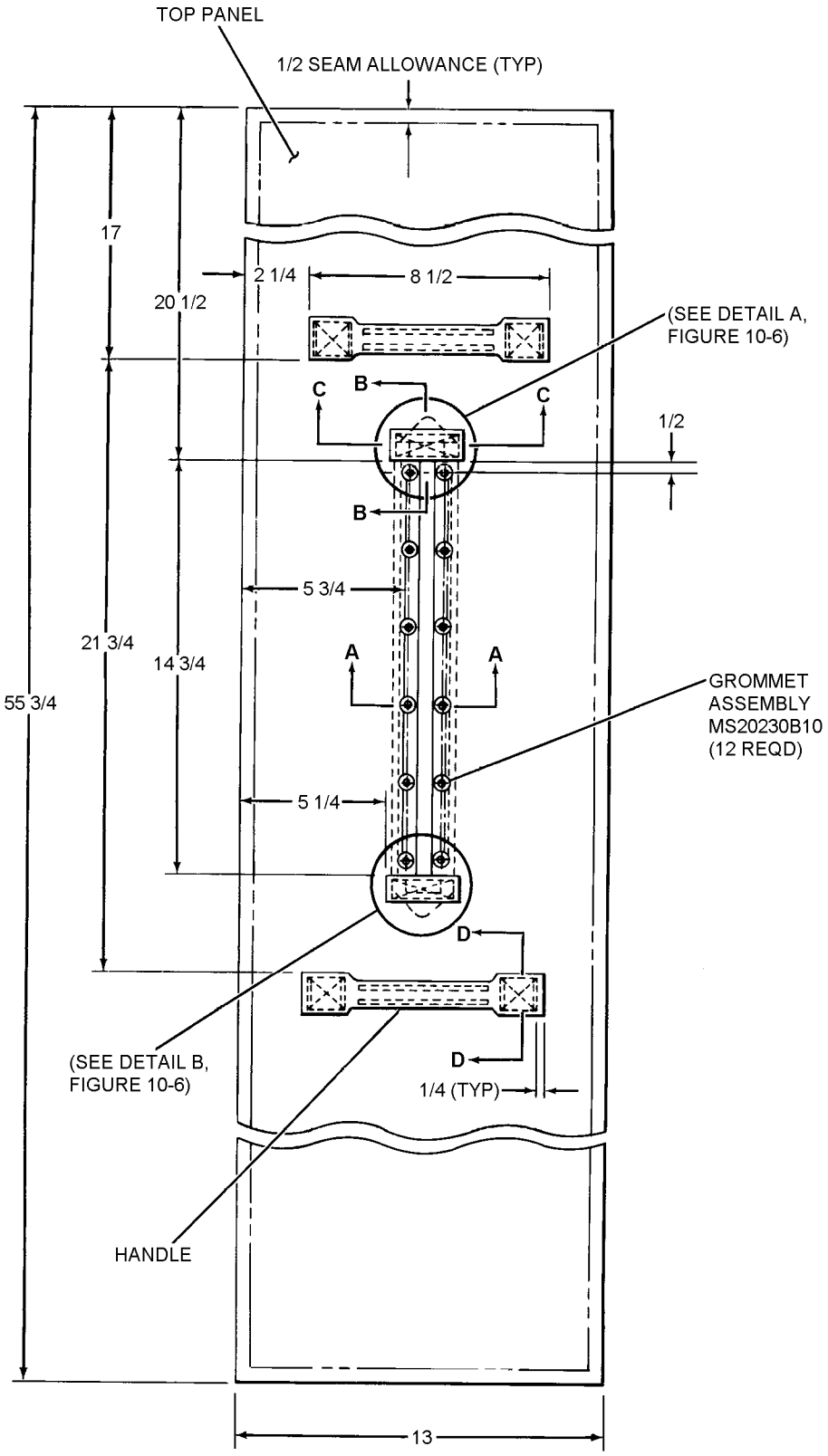

01000501

Figure 10-5. Top Panel Assembly, Survival Equipment Container Assembly (Sheet 1 of 2)

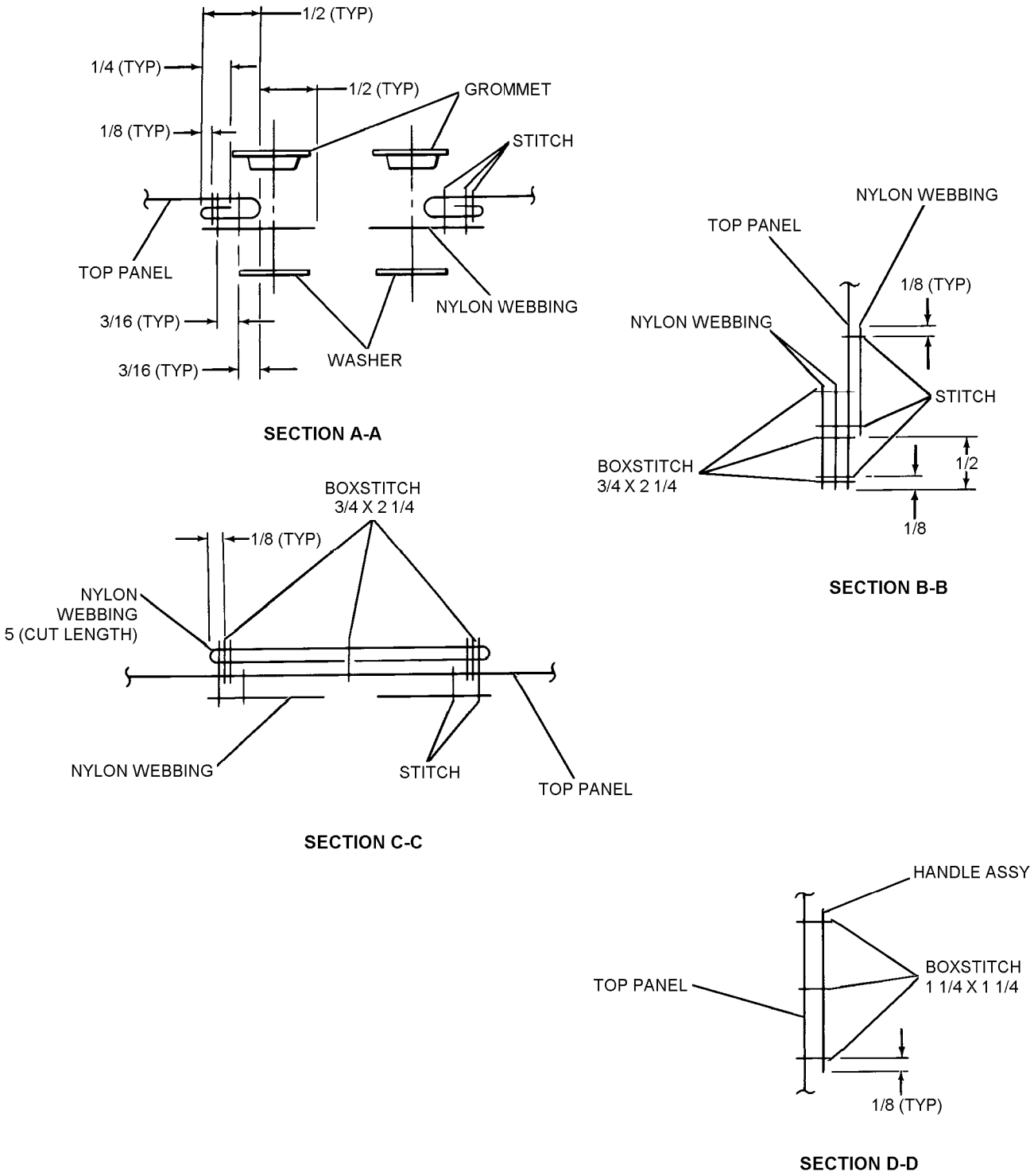

01000502

Figure 10-5. Top Panel Assembly, Survival Equipment Container Assembly (Sheet 2 of 2)

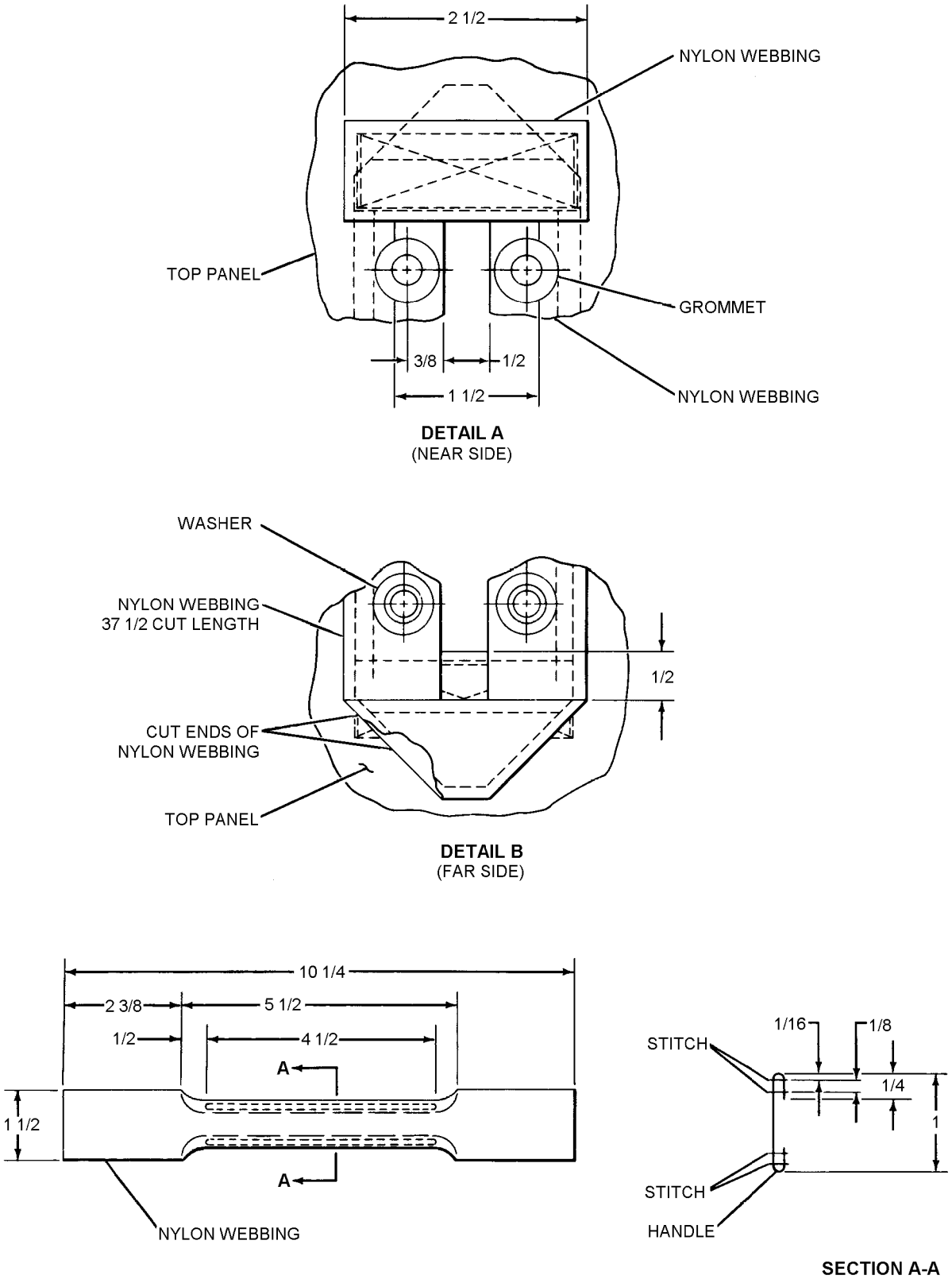

010006

Figure 10-6. Top Panel Details and Handle Assembly, Survival Equipment Container Assembly

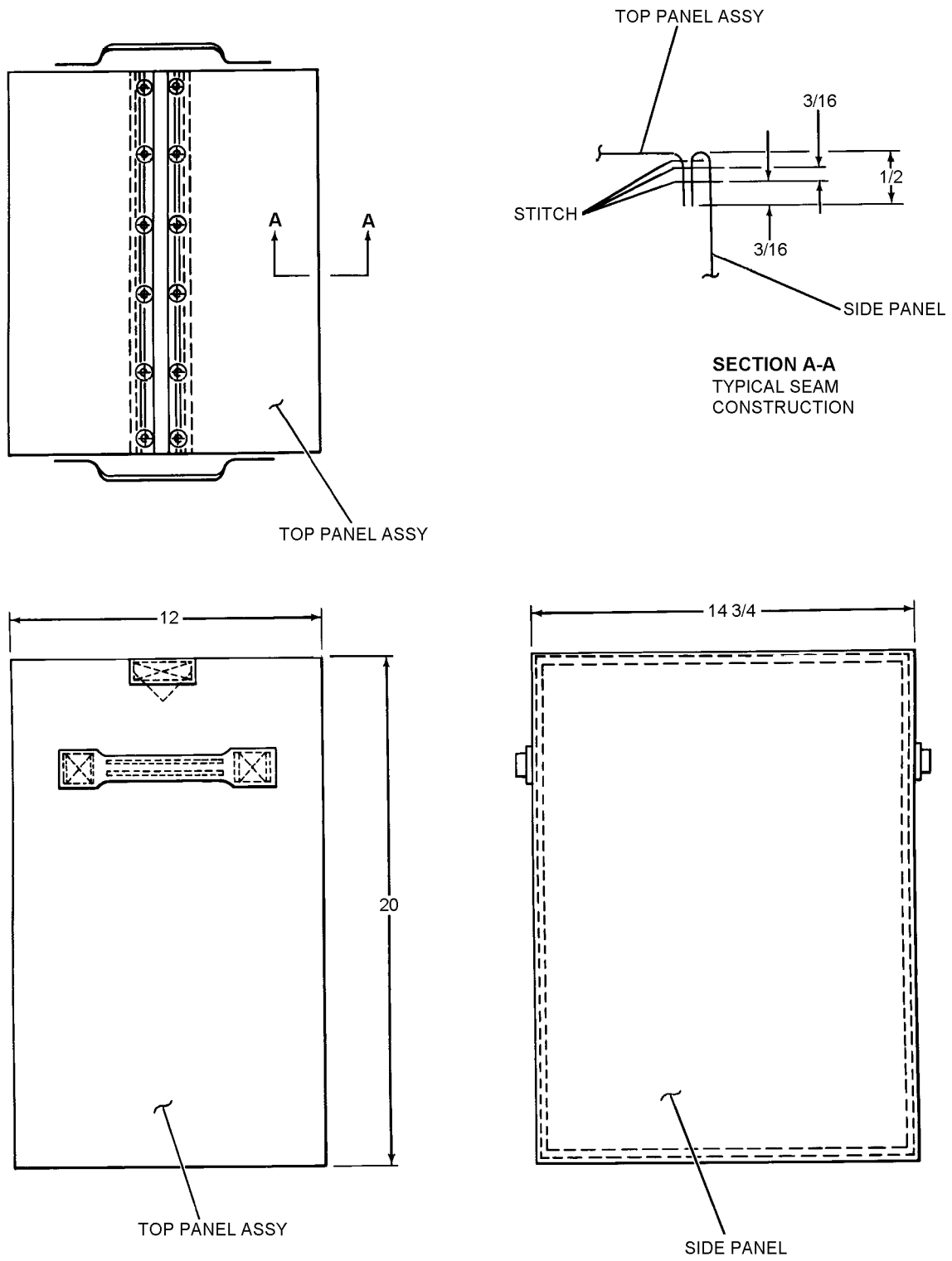

010007

Figure 10-7. Survival Equipment Container, SAR Kit

o. Turn the assembled survival equipment compartment assembly right-side-out. Stitch 1/8 and 3/16 inch in on all sides of the side panel catching the seam allowance, as shown in figure 10-7, Section A-A.

2. Fabrication of Retaining Line Pouch Assembly. To make the retaining line pouch assemblies, refer to figure 10-8 and proceed as follows:

a. Cut and sear two main panels, 15 3/4 x 38 1/2 inches.

b. Place the main pouch panel on a flat surface, and center the side panel on the main panel with 16 3/4 inches of the side panel extending beyond each 38-inch edge of the main panel. Secure the side panel to the main panel with a row of stitching 1/2 inch in from each 49 1/4-inch side of the side panel and 1/8 and 1/2 inch in from the 38-inch edge of the main panel as shown in figure 10-8, Sections B-B and C-C.

c. With the side panel facing downward, form one pouch corner by folding the panels so that corner No. 1 falls on top of and coincides with corner No. 2. See method of forming pouch in figure 10-8.

d. Stitch from the crease to the edge of the panels, parallel to the edge of the notch. The stitches shall be 1/2-inch in from the edge of the notch and shall be approximately 17 1/4 inches long. With the panels in the original position, form the second corner by placing corner No. 3 on top of corner No. 4 and stitching as before. The third and fourth corners shall be formed by mating corners Nos 5 with 6, and 7 with 8 respectively. Turn the corners right-side-out so that the seam allowance is inside. Stitch 1/16 inch in on the main panel for the full length of each vertical seam, as shown in figure 10-8, Section A-A. Form a hem around the open edge of the assembled pouch by turning the raw edge under 3/8, and stitching 5/16 inch in from the open edge.

3. Attaching The Retaining Line Pouch Assemblies To The Survival Equipment Container. To attach the retaining line pouch assemblies to the survival equipment container, refer to figure 10-9 and proceed as follows:

a. Attach the pouch assemblies to the survival equipment compartment assembly by mating the 14 3/4-inch sides of the pouch assemblies with the corresponding 14 3/4-inch sides of the compartment assembly so that bottoms of the three assemblies are in alignment with each other. Stitch the pouch main panel to the survival equipment compartment side panel 1/8 inch and 5/16 inch from the raw edge of the seam allowance on the two sides and bottom of the pouch main panel, as shown in figure 10-9.

b. Stitching from inside the pouch, secure the pouch main panel to the survival equipment compartment side panel. Place a row of stitching 1/8 and 5/16 inch in from the raw edges of the seam allowance at the two sides of the pouch main panel and along the inside bottom of the pouch assembly, catching the seam allowance. Place a row of stitching 1/16 and 1/4 inch in from the outside edge of the pouch hem as shown in figure 10-9, Sections A-A and B-B.

c. Install two grommets (MS20230B4), one on each panel common to the pouch and equipment compartment, located as shown in figure 10-9, Sections A-A and B-B.

10-22. SPLICING PROCEDURES.

Materials Required

Quantity	Description	Reference Number
1	Fid, splicing 3/8-inch or equivalent	CMC Rescue (Note 1)
As required	Twine, fibrous or equivalent	NIIN 00-587-0994
As required	Needle, sewing	—

Notes: 1. P.O. Box 6870
Santa Barbara, CA 93160
(800) 235-5741

1. Insert one end of rope into splicing fid.

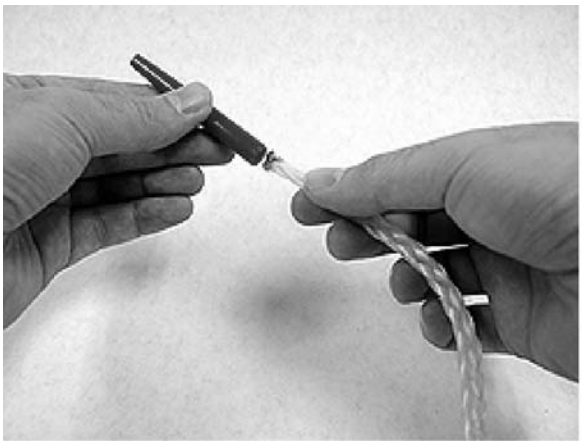

1022001

Step 1 - Para 10-22

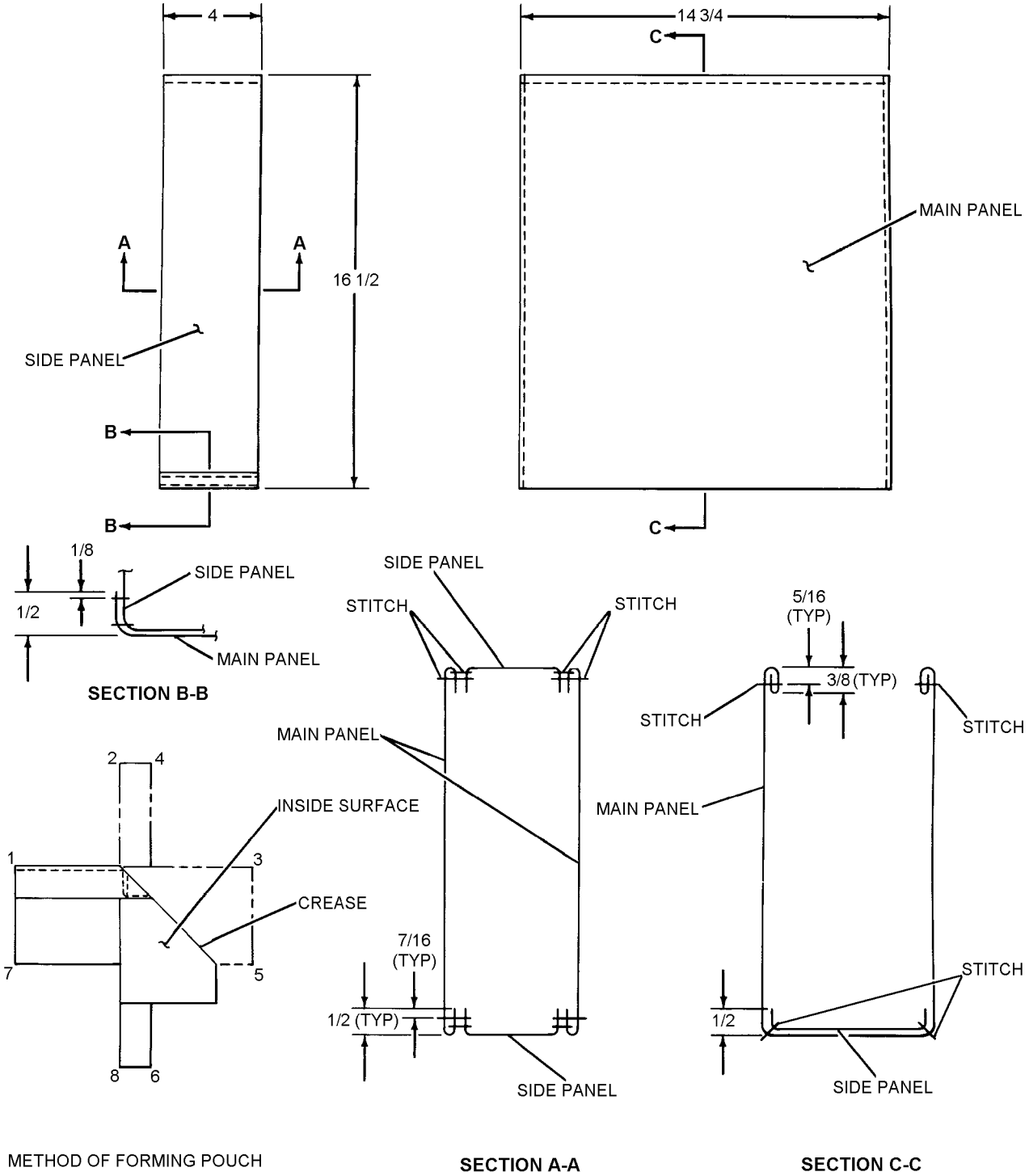

010008

Figure 10-8. Retaining Line Pouch Assembly, Survival Equipment Container

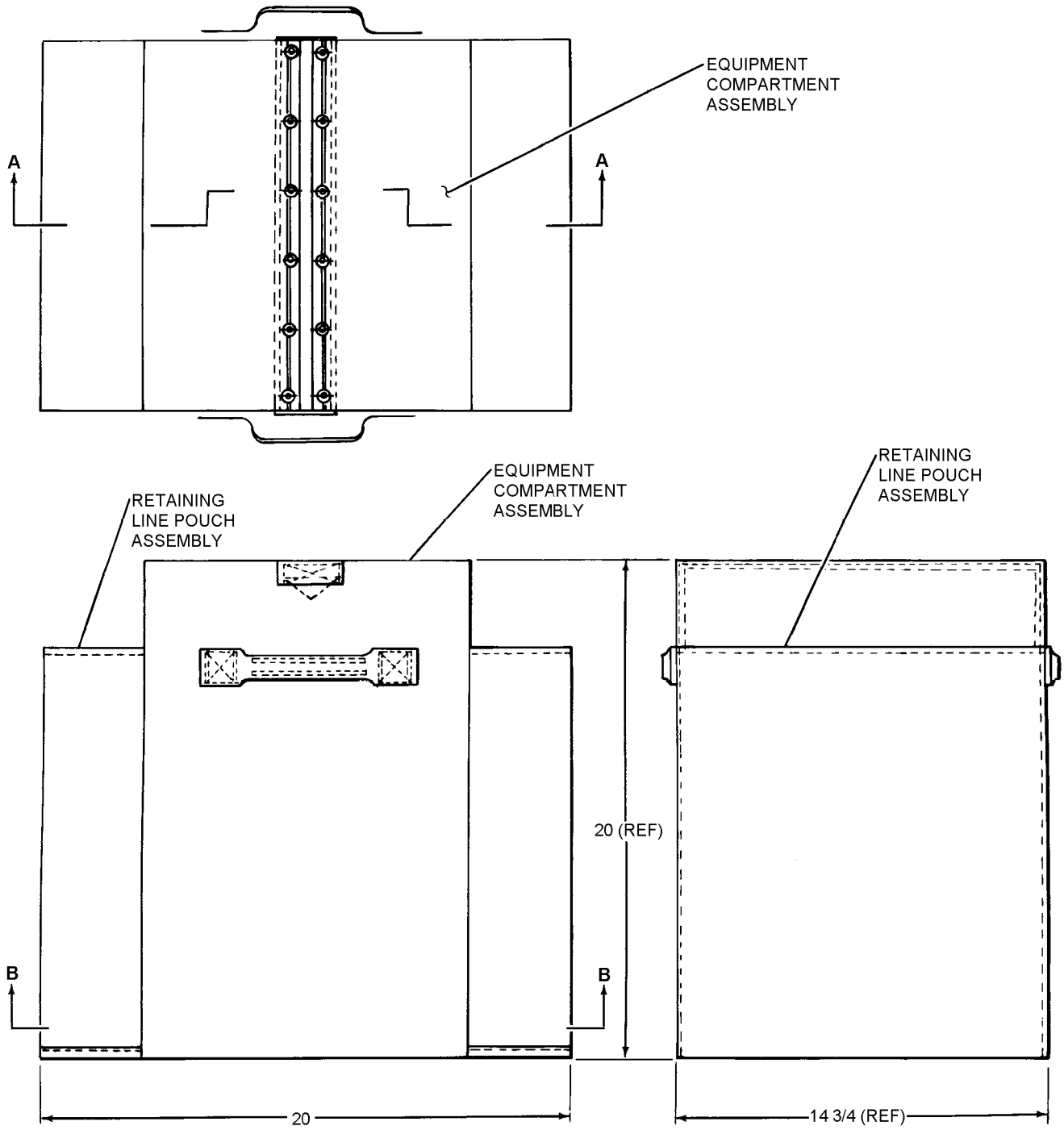

01000901

Figure 10-9. Survival Equipment Container with Pouch Assemblies, SAR Kit (Sheet 1 of 2)

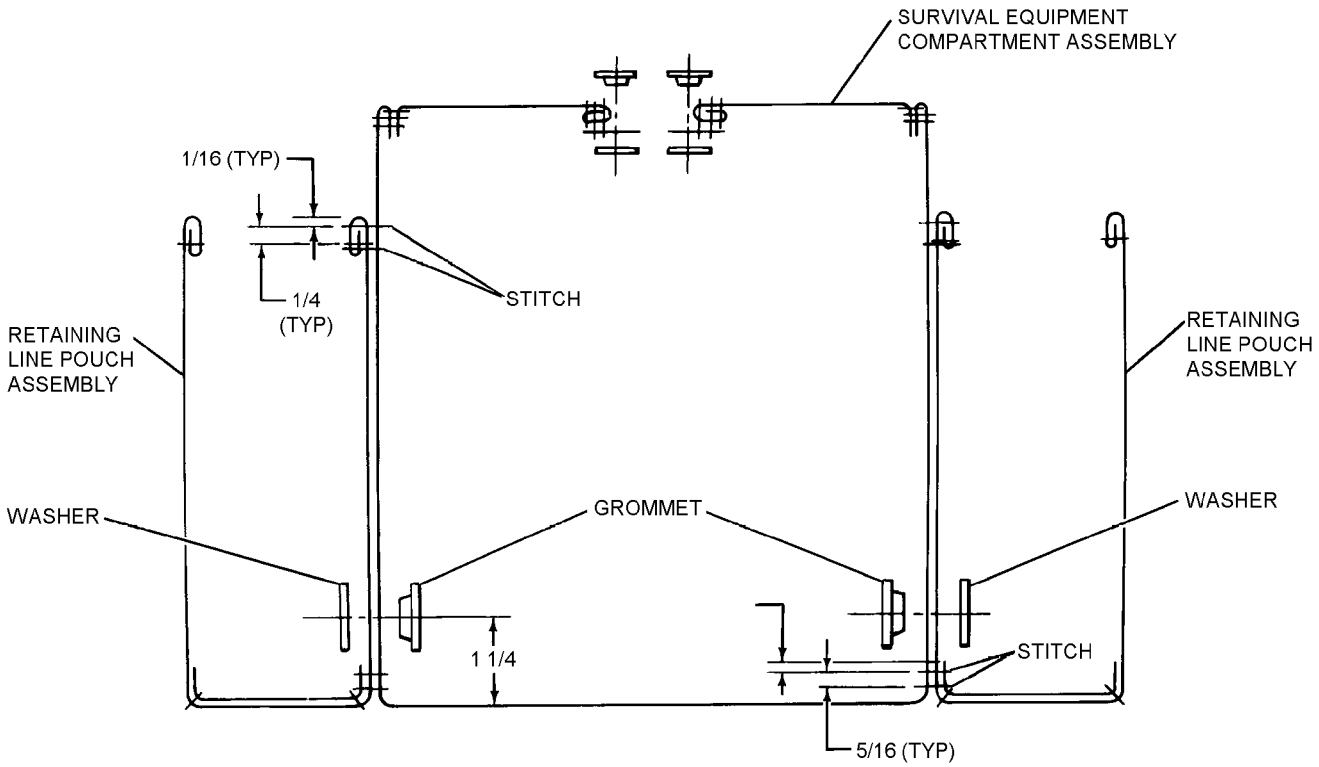

SECTION A-A

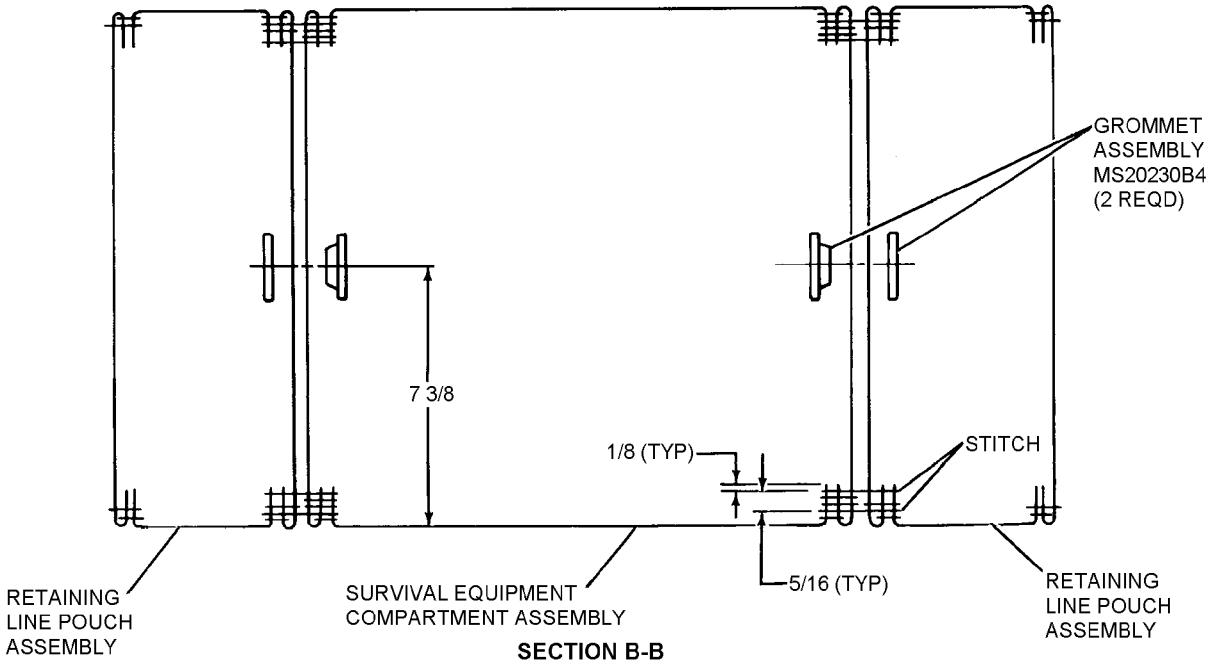

SECTION B-B

01000902

Figure 10-9. Survival Equipment Container with Pouch Assemblies, SAR Kit (Sheet 2 of 2)

2. Select point where splice is to begin. Insert tapered end of fid between the strands at this point. As fid penetrates stiches, guide the fid down the hollow center of the rope. Push fid with right hand; at the same time, use left hand to work the rope over the fid.

1022002

Step 2 - Para 10-22

3. Six to eight inches below the starting point, bring the fid out between two strands.

1022003

Step 3 - Para 10-22

CAUTION

Completed splice section should measure a minimum of six inches in length.

4. Remove fid from rope. Draw hand over splice to smooth and tighten splice.

1022004

Step 4 - Para 10-22

5. For maximum security the splice shall be stitched using a needle and heavy nylon, polyethylene or polypropylene twine. If a needle is not available, the fid can be used to lead the twine back and forth through the splice. Push ends of twine into hollow of rope.

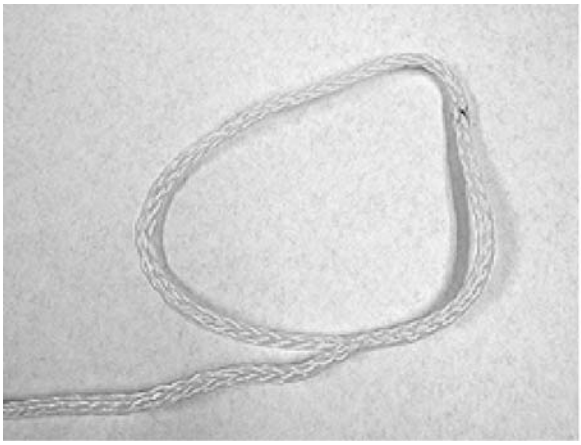

1022005

Step 5 - Para 10-22

10-23. RIGGING AND PACKING.

10-24. Unless operational requirements demand otherwise, rigging and packing of the SAR Kit shall be accomplished at Intermediate Level of maintenance.

10-25. RIGGING AND PACKING PROCEDURES. Rigging and packing procedures for the SAR Kit are accomplished in four operations as follows:

1. Preliminary Procedures. To perform preliminary procedures, proceed as follows:

a. On initial issue, perform inspection in accordance with paragraph 10-18.

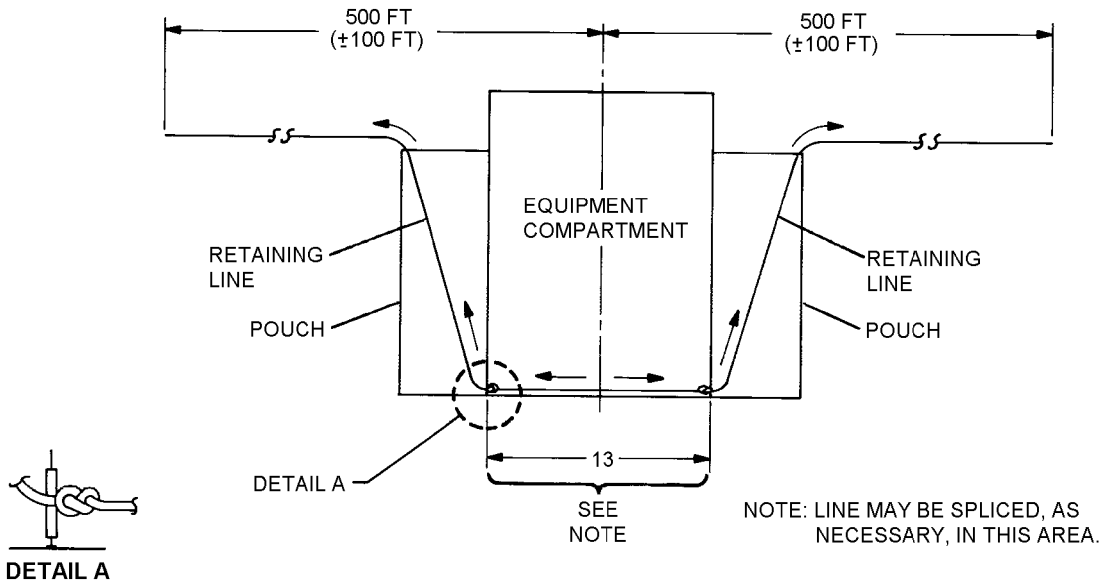

Figure 10-10. Attachment of Retaining Line

b. With the two ends of 1,000-foot retaining line held together, determine mid-point and mark.

c. At a point 6 1/2 inches on each side of mid-point, tie a figure eight knot.

NOTE

If necessary, line may be spliced between these two figure eight knots (figure 10-10).

d. Pass the retaining line ends through grommets in equipment container, then up through and out top of side pouch (figure 10-10).

e. Secure a V-ring (MS22045) to each end of retaining line with an eye splice (figure 10-11). Splice line in accordance with paragraph 10-22.

CAUTION

Use extreme care in faking line into pouch to avoid excessive twists and kinks and provide for a rapid unfouled payout.

f. Fake each half of line back into pouch beginning with the standing part of line next to grommet.

NOTE

A flat horizontal pattern shall be formed within pouch. Do not coil line on deck and then place into pouch.

g. Prevent line from spillage by hand tacking a zig-zag pattern across opening of pouch using one turn of size E nylon thread (figure 10-1).

h. Inflate liferafts to 2 psi.

NOTE

Mast holder, socket, and oarlock components have been deleted from newly procured MK-7 liferafts. Route retaining line to newly configured liferafts in accordance with procedures outlined in step j.

i. (MK-7) Pass one end of the 100-ft retaining line through mast holder until 12 feet remain. Secure line at this point to mast holder with clove hitch. Pass same end through either port or starboard oarlock, draw tight to remove any slack between mast holder and oarlock, and secure with clove hitch. Follow same procedure for passing line through stern oarlock, opposite side oarlock, and back through mast holder (figure 10-12).

j. (LRU-13/A) Remove lifeline and original line (not required for SAR Kit liferafts). Pass one end of the 100-foot retaining line through sea anchor attachment loop until 12 feet remain. Secure line to sea anchor with a clove hitch. Continue routing remaining length of line loosely around perimeter of liferaft through each lifeline attachment loop and back through sea anchor attachment loop. Line shall be secured at each lifeline loop with a clove hitch (figure 10-13).

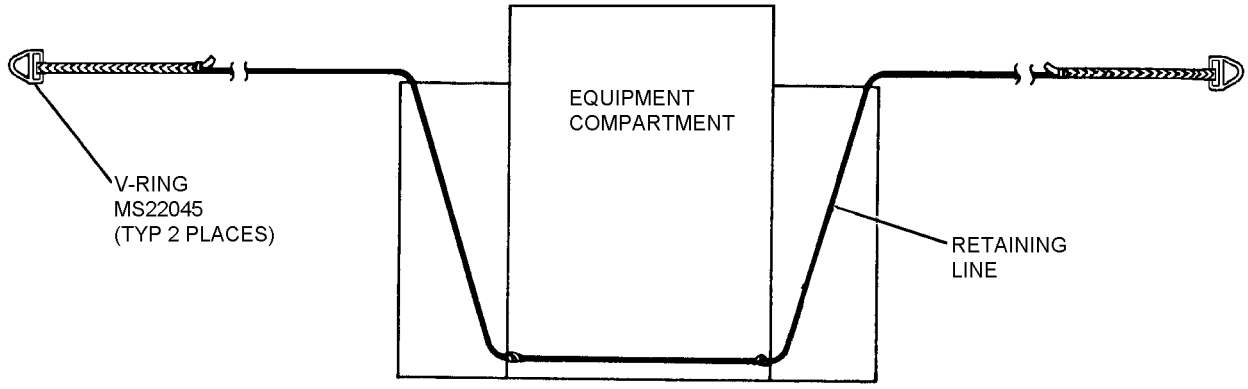

010011

Figure 10-11. V-ring Installation

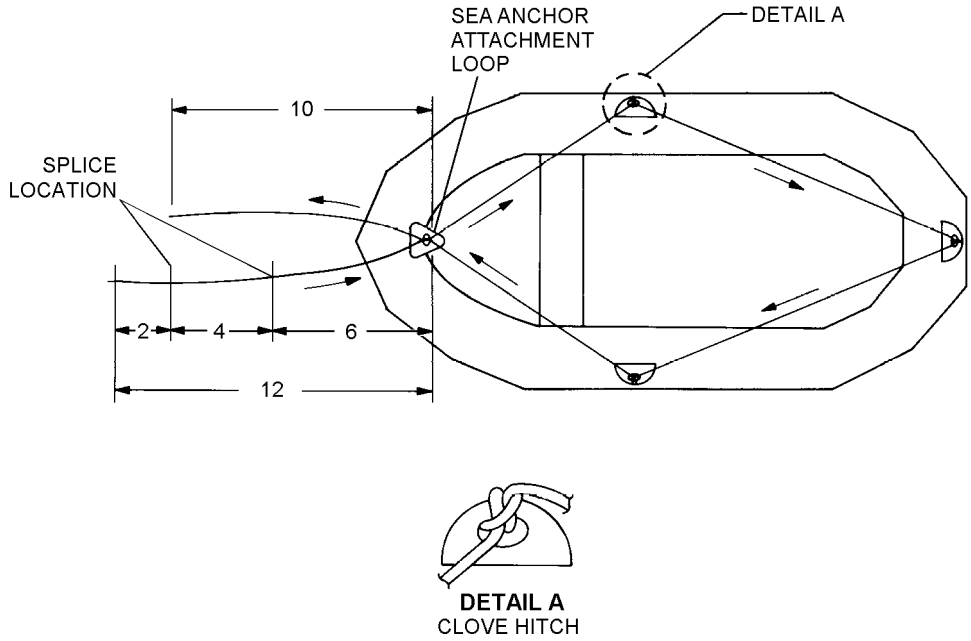

NOTE: ALL DIMENSIONS IN FEET

010012

Figure 10-12. Routing of Retaining Line to Liferaft (MK-7)

NOTE

Lengths of finished retaining line are approximate. Splices shall be 6 to 8 inches in length.

k. After routing line around liferaft, there should be approximately a 12-foot and a 10-foot length of retaining line remaining. Splice the 10-foot length into the 12-foot length at a distance of approximately 6 feet from the sea anchor attachment loop. Refer to paragraph 10-22 for splicing procedures. After splicing, seal off excess retaining line.

l. Approximately 6 feet of retaining line remains beyond the first splice. Place a snap hook (MS22042-1) onto free end of retaining line at a distance of approximately 2 feet and splice into line at that point. Finished liferaft retaining line should be approximately 10 feet.

m. Inspect and test liferafts and safety-wire inflation valve in accordance with NAVAIR 13-1-6.1-1.

2. Folding and Packing Liferaft. To fold and pack liferaft, proceed as follows:

a. Fold liferaft in accordance with figure 10-15.

NOTE

Folded liferafts shall not exceed overall dimensions of 28 x 15 x 7 inches in order to fit into liferaft containers.

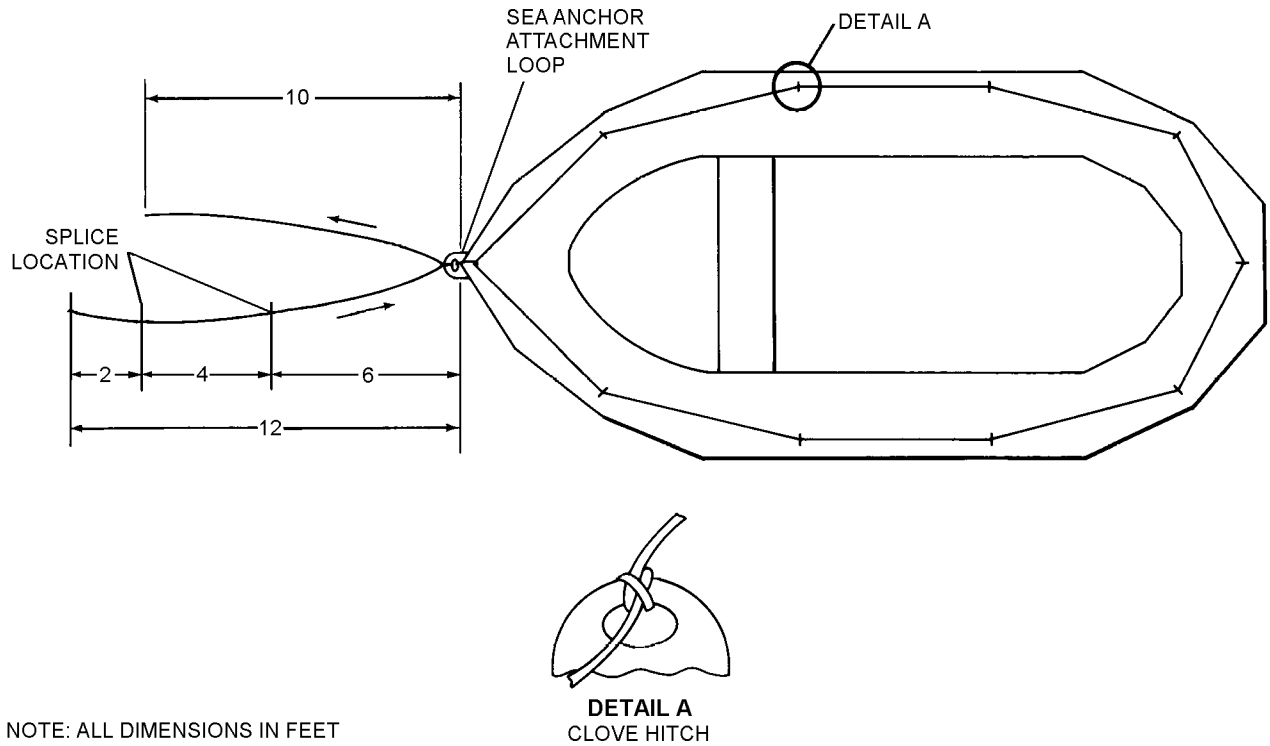

010013

Figure 10-13. Routing of Retaining Line to Liferaft (LRU-13/A)

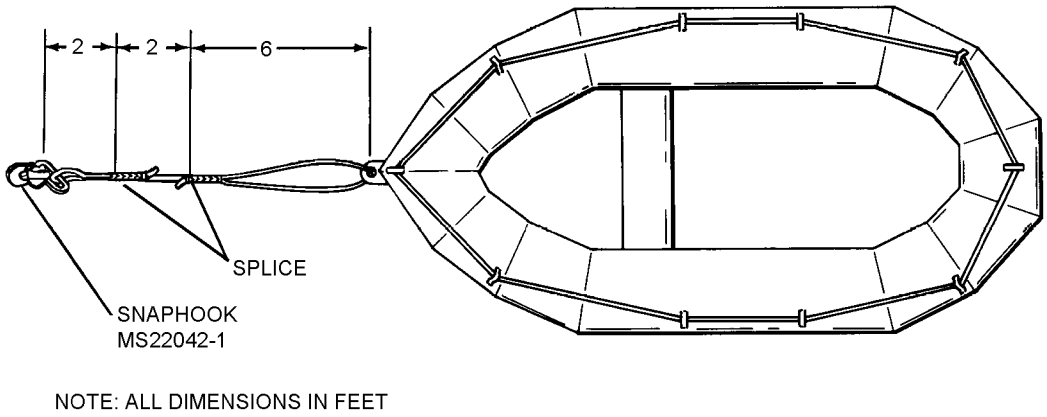

010014

Figure 10-14. Splicing Line and Snaphook Installation (LRU-13/A)

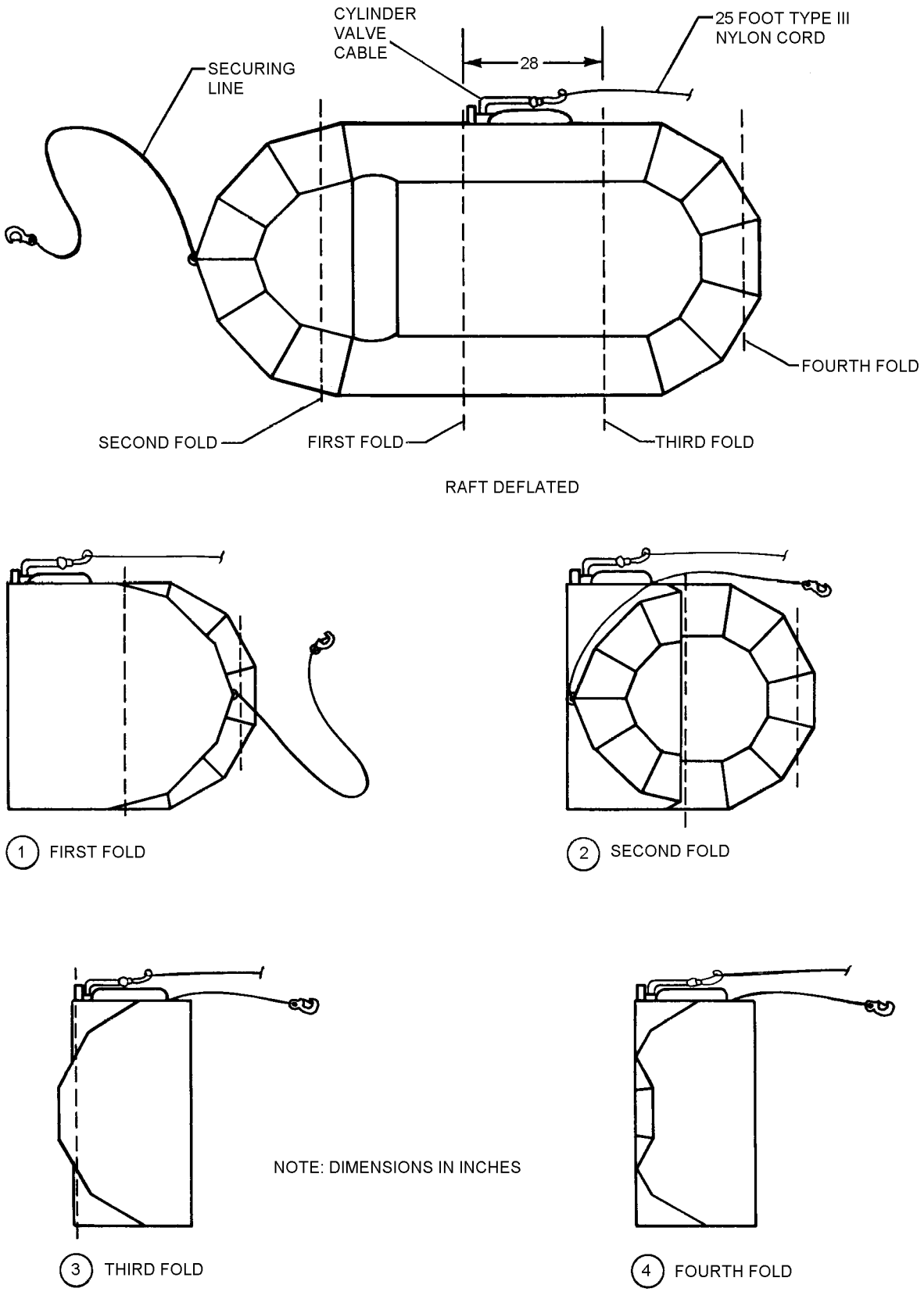

01001501

Figure 10-15. Folding Liferaft (Sheet 1 of 2)

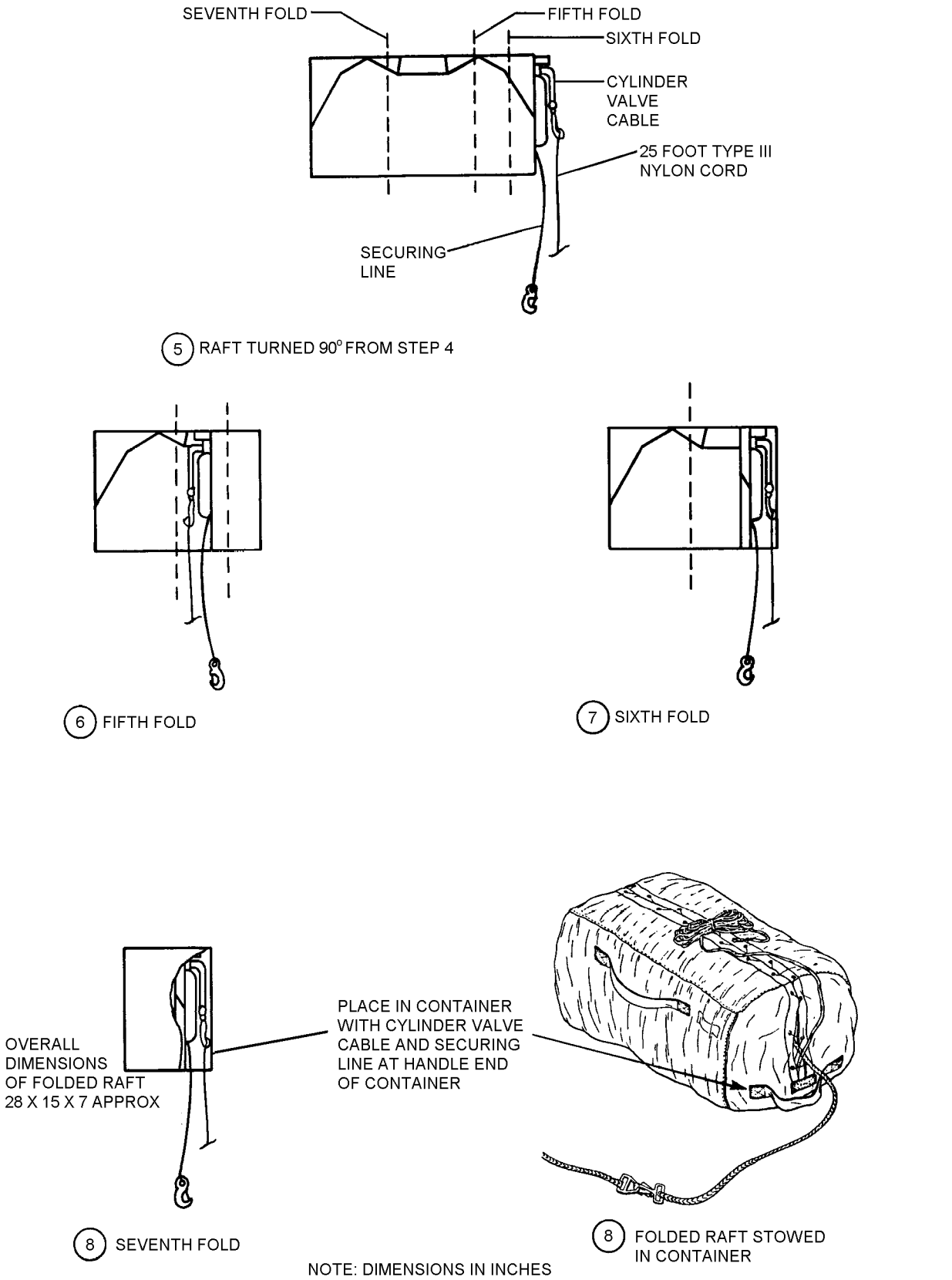

Figure 10-15. Folding Liferaft (Sheet 2 of 2)

b. Place liferaft into container with cylinder valve cable at top (end of container with handle), to allow for down-pull liferaft actuation.

c. Close container with size FF nylon thread in a single criss-cross pattern ending with square knot.

d. Secure a 25-foot length of Type III nylon cord to actuating cable snaphook on each liferaft with a bowline and loop. Wrap connection with tape for security. Each length of cord shall end with a spring clip for attachment to the aircraft structure. Fake lines and secure with rubberbands to prevent fouling.

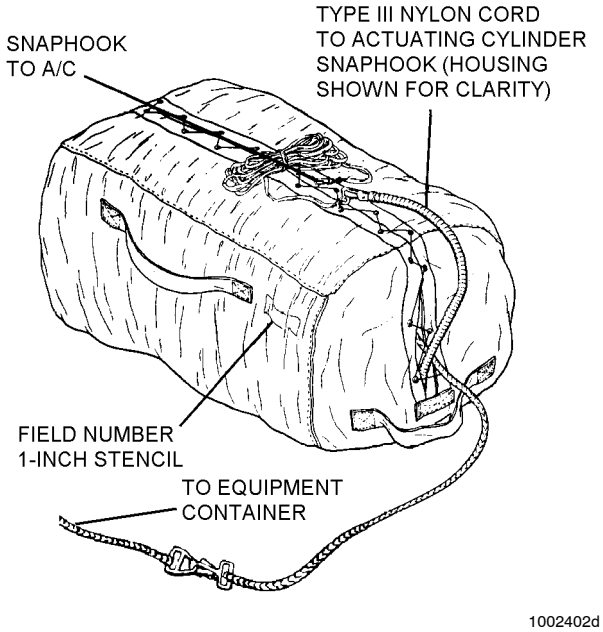

Step 2d - Para 10-24

3. Stowing Survival Items. To stow survival items, proceed as follows:

a. Pack items into container in a manner which will approximate a cube as follows:

Bagged Water	First Aid Kits
Water Bags	Distress Signals
Hand Pumps	Mirrors
Food Packets	Light Markers
Compasses	Sponges
Pocket Knives	Sunburn Preventive
Anti-Chap Lipsticks	GND/AIR Emergency Codes
Whistles	Sea Anchors
Dye Markers	Combat Casualty Blankets

b. Secure opening of container by lacing with Type III nylon cord as shown.

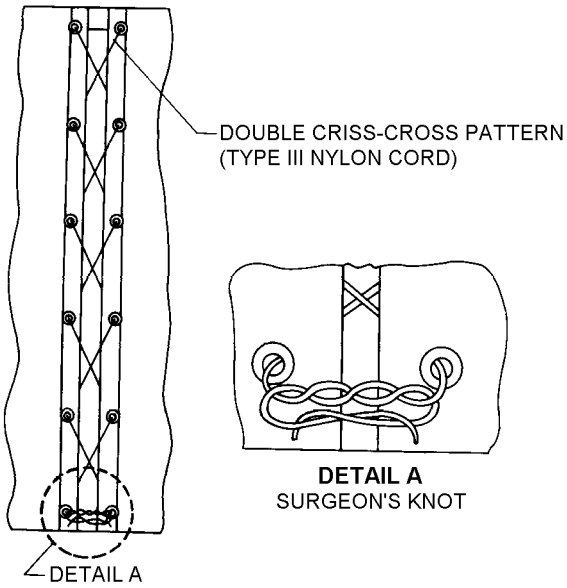

Step 3b. Para 10-25

4. Stowing SAR Kit in Aircraft. To stow SAR kit in aircraft, refer to applicable NATOPS procedures.

THIS PAGE INTENTIONALLY LEFT BLANK.

CHAPTER 11

COLD WEATHER SURVIVAL KITS

Section 11-1. SRU-A/P99S-1 4-Man Cold Weather Survival Kit

11-1. DESCRIPTION.

11-2. The 4-Man Cold Weather Survival Kit (figure 11-1) is designed to be stowed onboard non-ejection seat aircraft. It is intended for use by four aircrew members for land survival situations where average monthly over land temperatures do not exceed 50°F.

11-3. CONFIGURATION.

11-4. The basic survival items packed in the 4-Man Cold Weather Survival Kit are listed in table 11-1. These items are intended to support four survivors.

NOTE

The quantity and type of survival items may be varied at the discretion of the Type Commander to suit operational environment.

Components of the 4-Man Cold Weather Survival Kit which are not available through supply shall be obtained through local purchase.

11-5. APPLICATION.

11-6. The 4-Man Cold Weather Survival Kit is intended to be stowed onboard non-ejection seat aircraft as an emergency cold weather survival kit. The items in the kit are in quantities to provide a minimum of 72 hours of additional protection for four aircrewmembers in extreme cold weather climates.

11-7. MAINTENANCE.

11-8. Maintenance or repair operations shall be performed by Organizational Level maintenance or above. Maintenance shall be limited to inspection and minor repairs as indicated in paragraph 11-13.

11-9. INSPECTION. All 4-Man Cold Weather Survival Kits shall be subjected to Preflight/Postflight, Special and Place-In-Service Inspections.

NOTE

Cold weather survival kits that have been stored during the warm seasons will require a Place-In-Service Inspection prior to returning to service for each cold weather season. During periods of storage, cold weather survival kits shall be stored in a cool dry place.

11-10. Preflight/Postflight Inspection. The Preflight/Postflight Inspection is a Visual Inspection performed by the flight crew prior to and after each flight daily and consists of the following:

1. Inspect for integrity of survival kit bag.

2. Inspect security of survival kit closure.

3. Security of attachment of 4-Man Cold Weather Survival Kit to aircraft.

4. Inspect snap hook.

5. Inspect for loose or broken stitches.

11-11. Special Inspection (30-Day). A 30-Day Special Inspection shall be performed by Organizational Level maintenance on all in-service cold weather survival kits. Perform the 30-Day Special Inspection as follows:

1. Inspect for rips, stains, and loose or frayed stitching on containers.

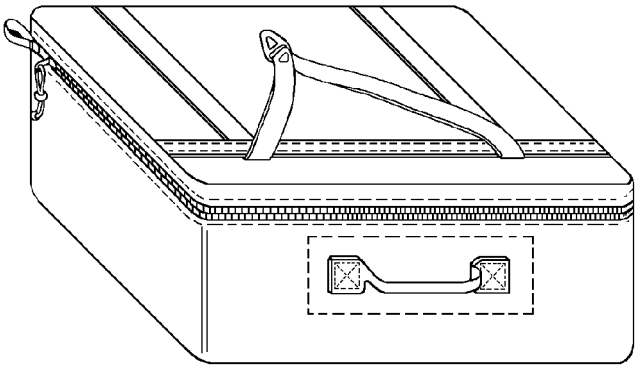

011001

Figure 11-1. SRU-A/P99S-1 4-Man Cold Weather Survival Kit

Table 11-1. Survival Equipment – 4-Man Cold Weather Survival Kit

Description	Quantity	Reference Number
Mirror, Emergency Signaling	1	NIIN 00-105-1252, MIL-M-18371
Light, Chemilluminescent, IR	3	NIIN 01-195-9752, 908019
Light, Chemilluminescent, Green	3	NIIN 01-074-4229, A-A-55134
Light, Chemilluminescent, Red	3	NIIN 01-178-5559, A-A-55134
Strike Force Striker	1	Survival Inc. 2633 Eastlake Ave. East Suite 103 Seattle, WA 98102 (206) 726-9363 (888) 237-3239 1WG0411-BX
Tinder Blocks (Note 2)	2	Survival Inc. 2633 Eastlake Ave. East Suite 103 Seattle, WA 98102 (206) 726-9363 (888) 237-3239 1WG0412-BX
Lifeboat Matches	1	Brigade Quartermasters 1025 Cobb International Blvd. Kennesaw, GA 30152-4300 (800) 338-4327 SA30435
Aluminum Candle Lantern	1	Peregrine Outfitters 105 S. Brownell Rd Williston, VT 05495 (800) 222-3088 I002
Replacement Candles	1	Peregrine Outfitters 105 S. Brownell Rd Williston, VT 05495 (800) 222-3088 I008
Fox 40 Whistle	1	NIIN 01-447-8766, FOX40CLASSIC
Tubing, Nonmetallic	6 ft.	NIIN 01-345-2256, MO-062
Ration, Cold Weather	2	NIIN 01-267-5864, MIL-R-44277
Ultima Thule Sleeping Bag	2	Wiggy's Inc. 2482 Industrial Blvd. P.O. Box 2124 Grand Junction, CO 81502 (303) 241-6465 (800) 748-1827 WIG20UL
Blanket, Casualty	2	NIIN 00-935-6665, MIL-B-36964
Pocket Cooker	1	Brigade Quartermasters 1025 Cobb International Blvd. Kennesaw, GA 30152-4300 (800) 338-4327 MSC40

Table 11-1. Survival Equipment – 4-Man Cold Weather Survival Kit (Cont)

Description	Quantity	Reference Number
Hexamine Solid Fuel Tabs	1	Brigade Quartermasters 1025 Cobb International Blvd. Kennesaw, GA 30152-4300 (800) 338-4327 TFB97
2 QT Aluminum Pot w/Lid and Handle	1	Campmor P.O. Box 700 Saddle River, NJ 07458-0700 (888) 226-7667 82008
Rationing Cup 8 oz	2	Campmor P.O. Box 700 Saddle River, NJ 07458-0700 (888) 226-7667 81911
Survival Saw 15″ Blade	1	Recreational Equipment Inc. 1700 45th St. East Sumner, WA 98390 (800) 258-4567 K404-040
Telescoping Shovel	1	Exploration Products, Inc. 3924 Irongate Rd. Suite C Bellingham, WA 98226 (800) 448-7312 550083
Bag, Plastic, 32 Gal.	3	NIIN 01-183-9769, A-A-1668
Cape, Aircrewmember's (Note 4)	3	NIIN 01-040-9018, 3211
Tape, Duct	1 Roll	NIIN 00-103-2254, A-A-2231
Ice Screws, Titanium	2	Exploration Products 3924 Irongate Rd. Suite C Bellingham, WA 98226 (800) 448-7312 550166
Chemical Heat Packs	10 pr	NIIN 01-395-3018 or Grabber 4600 Danvers Dr. SE Grand Rapids, MI 49512 (616) 940-1914 (800) 423-1233 G-28
Cord, Fibrous, Ty 3, Nat.	50 ft	4020-00-240-2146 MIL-C-5040
Ice Pick	1	Exploration Products 3924 Irongate Rd. Suite C Bellingham, WA 98226 (800) 448-7312 810001

Table 11-1. Survival Equipment – 4-Man Cold Weather Survival Kit (Cont)

Description	Quantity	Reference Number
Lightweight Extreme Weather Shelter	1	Johnson Camping 625 Conklin Rd. P.O. Box 966 Binghamton, NY 13902 (607) 779-2222 EXT 329 2628911 CAGE Code 73005 or The North Face, Inc. 407 Merrill Ave. Carbondale, CO 81623 (970) 704-2300 VE-25
Thermal Protective Aid (TPA) (Note 3)	2	Exploration Products 3924 Irongate Rd. Suite C Bellingham, WA 98226 (800) 448-7312 550061
Self-Inflating Ground Insulator (Ultralight)	2	Cascade Designs, Inc. 4000 1st Avenue S. Seattle, WA 98134 (206) 583-0583 (800) 527-1527 01232
Flashlight, Hand Generated (Optional)	1	NIIN 00-283-9806 MIL-L-8209 Type A9

Notes:
1. If space permits after packing, additional quantities of above listed items may be added to the survival kit.
2. Tinder blocks are of same chemical composition as cubes authorized in original message. However, they are now sold in packages of four larger cubes in a slightly different wrapper. Leave cubes in outer-most product wrapping. Do not individually unwrap cubes. Two packages of the four-pack may be purchased to replace originally authorized 12 tinder cubes.
3. This system is replacement of originally authorized TPA. It is slightly larger and more durable than P/N 5520301. Unlike original TPA, the emergency bag does not have legs.
4. Aircrewmember's cape can be substituted for the 32 gal plastic bag.

2. Inspect condition of webbing for wear and fraying.

3. Inspect for loose or missing snap hooks.

4. Inspect snap hooks for ease of operation and corrosion.

11-12. Place-In-Service and 360-Day Special Inspection. The Place-In-Service and 360-Day Special Inspections shall consist of the tasks required for the 30-Day Special Inspection as well as a complete inspection and inventory of each survival kit. Inspect survival items in accordance with Section 11-3. Repair or replace as required. Assemble kits in accordance with paragraph 11-24.

NOTE

All stitches shall be in accordance with ASTM-D-6193, Type 301 Lockstitch, 7 to 10 stitches per inch. Overstitch minimum 1/2 inch.

11-13. REPAIR AND REPLACEMENT.

11-14. Repair of Holes or Tears in Equipment Container Bag.

Materials Required

Refer to paragraph 11-20 Materials Required List.

1. All tears and holes shall have a square or rectangular patch installed on the inside and outside of the defective area.

2. Lay inside of torn or hole area on a flat smooth surface and outline area to be patched using a regular or tailor's chalk with a minimum margin around the torn or hole area of 1 1/2 inches.

3. Cut cordura cloth 1/2 inch larger than the margin made in step 2.

4. Fold the cloth under 1/2 inch on all sides of the repair cloth. Straight pin as necessary.

5. Lay patch over the area made in step 2. There shall be no folds of cloth or pleats. Straight pin as necessary.

6. Sew a row of stitches 1/8 inch from the folded edge of the cordura cloth and another row 1/4 inch in from the first row of stitches, there shall be no folds in the cloth or pleats.

7. Lay outside of torn or hole area on a flat smooth surface and outline area to be patched using regular or tailor's chalk with a minimum margin around the torn or hole area of 2 inches.

8. Cut cordura cloth 1/2 inch larger than the measurement made in step 7.

9. Fold 1/2 inch under on all sides of the repair cloth. Straight pin fold as necessary.

10. Lay a patch on the area made in step 7. Straight pin patch as necessary.

11. Sew a row of stitches 1/8 inch from the folded edge of the cordura cloth and another row 1/4 inch in from the first row of stitches, there shall be no folds in the cloth or pleats.

12. Quality assurance shall inspect repaired areas.

11-15. Repair of Loose and/or Broken Stitches in Equipment Container Bag. Loose and/or broken stitches shall be repaired by using thread identified in paragraph 11-20.

1. Stitching shall start at a minimum of 1/2 inch prior to the loose and/or broken stitching and continue a minimum of 1/2 inch after the loose and/or broken stitching.

2. Quality assurance shall inspect repaired areas.

11-16. Repair of Torn/Worn or Frayed Webbing or Tape.

NOTE

Webbing or tape shall be considered repairable if the torn/worn or frayed area is 5 inches or less.

1. Use the same type webbing used in manufacturing (paragraph 11-20).

2. Cut webbing 6 inches larger than defective area.

3. Fold 1 inch back on each end of webbing.

4. With folds facing the defective area place cut piece of webbing on the defective area.

5. Webbing shall extend 2 inches beyond torn/worn or frayed area on both ends.

6. Sew a box stitch 1/8 inch from the edge of the webbing.

7. Quality assurance shall inspect repaired areas.

11-17. Replacement of Snap Hooks. Defective/corroded snap hooks (MS22018) shall be removed and replaced. Quality assurance shall inspect repaired area.

11-18. Replacement of Slide Fasteners. Defective/corroded slide fasteners shall be removed and replaced. Refer to paragraph 11-20 for installation procedures. Quality assurance shall inspect repaired area.

11-19. FABRICATION.

11-20. EQUIPMENT BAG. To make the equipment container or bag for the SRU-A/P99S-1 4-Man Cold Weather Survival Kit, proceed as follows:

Materials Required

Quantity	Description	Reference Number
As Required	1000 Denier Heavyweight Cordura Bright Yellow, 60-Inch Wide	Unitex East Coast (800) 556-7254 Unitex West Coast (800) 456-6282
	-or-	
	Cloth, Laminated, Yellow	MIL-C-43006 NIIN 00-926-1587
48 Inches	Chain, Interlocking, Fastener Slide 120-Inch, Medium Heavy Duty, Olive Drab	V-F-106 NIIN 00-281-4778
	-or-	

Materials Required (cont)

Quantity	Description	Reference Number
48 Inches	Chain, Interlocking, Fastener Slide 108-Inch, Medium Heavy Duty, Green	V-F-106 NIIN 00-281-3052
	-or-	
48 Inches	Chain, Interlocking, Fastener Slide 72-Inch, Medium Heavy Duty, Olive Drab	V-F-106 NIIN 00-286-3175
2	Stop, Interlocking Slide Fastener, Open, Medium Heavy Duty	V-F-106 NIIN 00-276-4939
1	Stop, Interlocking Slide Fastener, Closed, Medium Heavy Duty	V-F-106 NIIN 00-472-8679
1	Slider and Pull, Reversable, Wire Stirrup	V-F-106 NIIN 00-547-9998
1	Bead	Salvage from Beaded Handle Assembly (975AS121-11, NIIN 01-120-4752) from LPU-1 or LPU-23 Life Preservers
As Required	Tape, Textile, Type III, 3/4 Inch, Olive Drab	MIL-T-5038 NIIN 00-176-8083
	-or-	
	Tape, Textile, Type III, 1 Inch, Green	MIL-T-5038 NIIN 00-753-6144
	-or-	
	Tape, Textile, Type II, 1 Inch, Yellow	MIL-T-5038 NIIN 00-190-0521
As Required	Webbing, Textile, Type XV, 2 Inch, Olive Drab	MIL-W-4088 NIIN 00-082-2142
	-or-	
	Webbing, Textile, Type II, 1 Inch, Yellow	MIL-W-4088 NIIN 00-262-1643
	-or-	
	Webbing, Textile, Type VI, 1 3/4 Inch, Olive Drab	MIL-W-4088 NIIN 00-281-3013
As Required	Thread, Size E, Type I, Class A, Yellow	V-T-295 NIIN 00-263-9931
	-or-	
	Thread, Size E, Type II, Class A, Green	V-T-295 NIIN 00-204-3884
As Required	Seal, Lead	NIIN 00-598-3427
As Required	Wire, Aluminum, 0.032-inch Diameter, Temper 0	QQ-A-225/1 NIIN 00-595-8200
1	Link, Parachute (V-ring)	MS22020-1 NIIN 00-862-5749
1	Snap Hook	MS22018 NIIN 00-875-1861

1. Preparation of Fabric Pieces.

NOTE

All cut webbing ends shall be seared. All stitching shall be in accordance with ASTM-D-6193, Type 301 Lockstitch, 7 to 10 stitches per inch. All stitching shall be 3/8 inches from fabric edge. Stitching shall be 1/8 inches from edge of webbing, back stitching or overlap stitching a minimum of 1 inch unless otherwise directed.

a. Cut fabric into the following pieces:

Top/Bottom Panel (1)	40 x 19-1/4 Inches
Slide Fastener Panel (1)	10 1/4 x 50 Inches
Baffle Strip (1)	2 3/8 x 47 Inches
Handle Reinforcement Panel (l)	3 x 12 Inches

b. Layout panel sides of kit bag. Mark all centers on all sides of panels (figure 11-2):

(1) Top/Bottom Panel – 19 1/4 Inch edge is the top.

(2) Slide Fastener Panel – 50 Inch edges are on top and bottom.

2. Fabrication of Slide Fastener Panel.

a. Remove 1 inch of chain teeth from each end of 48 inch slider chain. Install slide fastener pull tab and install top/bottom stops at each end of the chain teeth.

b. Fold slide fastener in half and mark the middle.

c. From top side of slide fastener panel, measure down 2 inches on each side and make a mark on the slide fastener panel. Make a mark 1 inch in from each side of the 2 inch marks (figure 11-3).

d. If the slide fastener pull tab has a pull tab on each side, remove and discard one.

e. Ensure slide fastener pull tab is laying against the slide fastener panel and align the slide fastener tape ends with the 1 inch marks made in step c above.

f. Sew a single row of stitches 1/16 inch from around the outside edge of the slide fastener tape (box-stitch) (figure 11-3).

g. Turn slide fastener panel over and cut center slide fastener opening (figure 11-3).

h. Fold cut edges under and sew a single row of stitches 1/16 inch from the folds around slide fastener (boxstitch) (figure 11-3).

i. Bind baffle strip edges with 3/4 inch binding tape or 1 inch webbing (figure 11-4).

j. Turn slider fastener panel over with inside up. Center baffle strip over slide fastener with one edge along top edge of slide fastener tape (figure 11-4).

k. Sew a single row of stitches 1/8 inch from the top edge of the baffle strip (figure 11-4).

3. Fabrication of Slider/Thong Assembly.

a. Cut and sear 8 inches piece of 3/4 inch webbing. Fold end of webbing and insert through opening on end of pull tab. Fold in half lengthwise.

b. Box stitch 1/2 x 1 3/8 inches rectangle 3/4 inch from fold of webbing on pull tab end. Thread webbing through handle bead and move bead close to slide.

c. With webbing ends together, fold ends two times 3/8 inch and sew two rows of stitches 1/8 inch from the webbing edge. Move bead close to fold (figure 11-5).

4. Fabrication of Webbing Stop/Hold.

a. Cut 2 pieces 1 inch yellow webbing 9 inches long, one for each end of slide fastener.

b. Fold into 4 inch loop and fold 1 inch end under loop end. Center webbing over end of tuck at each slide fastener end. Position open loop facing away from slide fastener.

c. Sew in place using a 3/4 x 3/4-inch crossbox stitch (figure 11-6).

5. Fabrication of Slide Fastener Panel Handle.

a. On inside of slide fastener panel, mark center lines long and wide enough for placement of 3 x 12 inches reinforcement panel. Position center of reinforcement panel on top of slide fastener length-wise on panel center. Sew in place with one row of stitches.

b. On outside of slider, mark center lines for handle position. On the slide fastener panel lengthwise centerline, measure and mark 3 inch and 4 1/2 inches on both sides of slider panel center for handle sew down points.

c. Cut a 13 inch piece of Type VI webbing and make a mark 3 inch from each end. Fold in half lengthwise and mark the center of the webbing. At the fold measure 7/16 inch on both sides of the centerline of the webbing and mark to form a 7/8 inch measurement. Fold webbing in at mark to form a 7-inch handle grip (figure 11-7). Sew in the stitching to hold the handle. Fold 3 inch end in half to form a 1 1/2 inch fold at each end of the webbing handle. Center handle on slide fastener panel and sew handle to panel using a 1 1/4 x 1 1/2-inches crossbox stitch on each end of the handle (figure 11-7).

6. Fabrication of Top/Bottom Fabric Panel.

a. From top edge of top/bottom panel, measure and mark sew lines 1 inch and 26 1/2 inches down for retention webbing. On both side edges, measure and mark 3 inches and 4 3/4 inches sew lines for suspension straps.

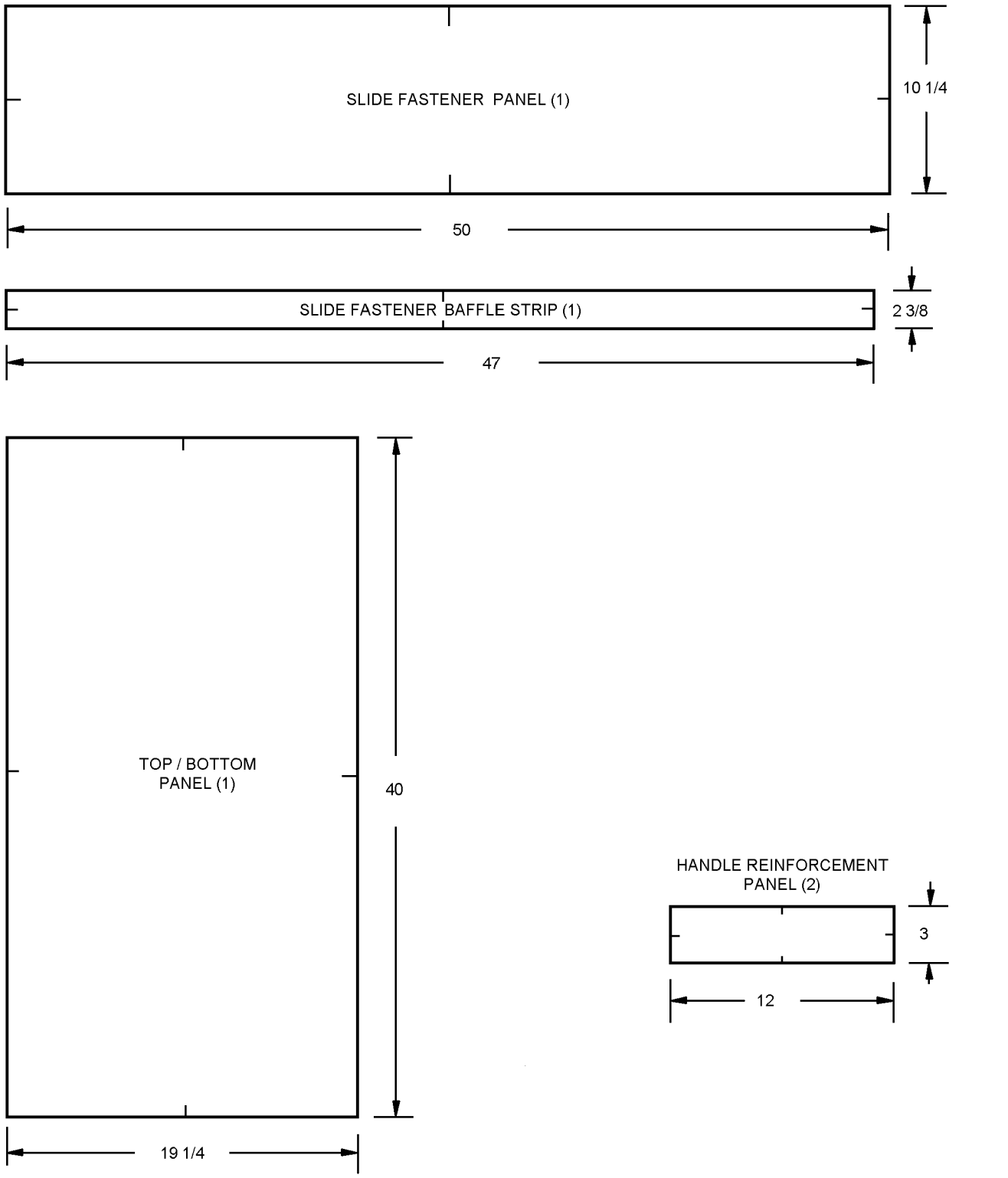

011002

Figure 11-2. 4-Man Survival Kit Bag Fabric Panel Dimensions

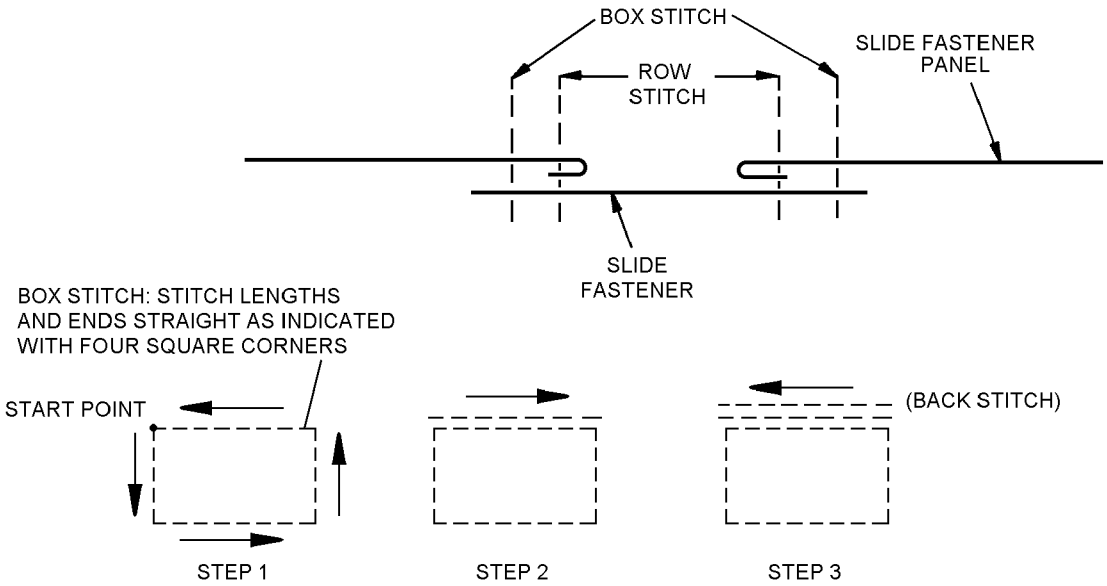

011003

Figure 11-3. 4-Man Survival Kit Bag Slide Fastener Assembly

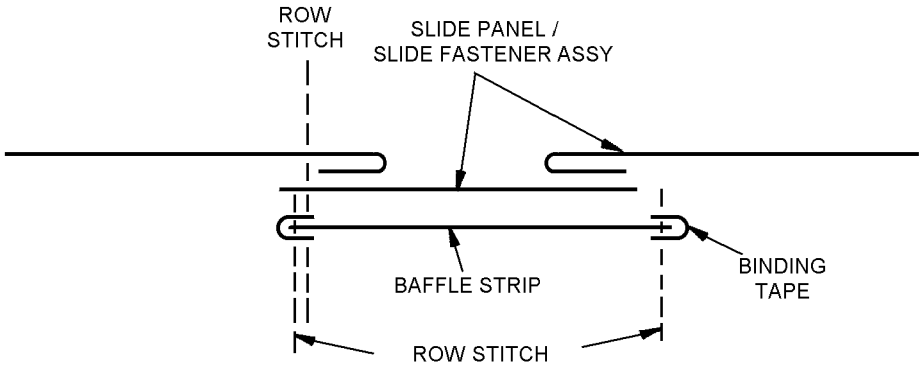

011004

Figure 11-4. 4-Man Survival Kit Bag Baffle Strip Assembly

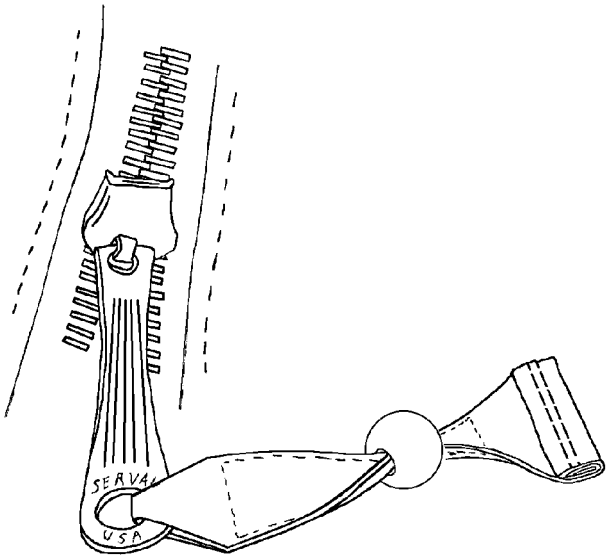

011005

Figure 11-5. 4-Man Survival Kit Bag Slider/Thong Assembly

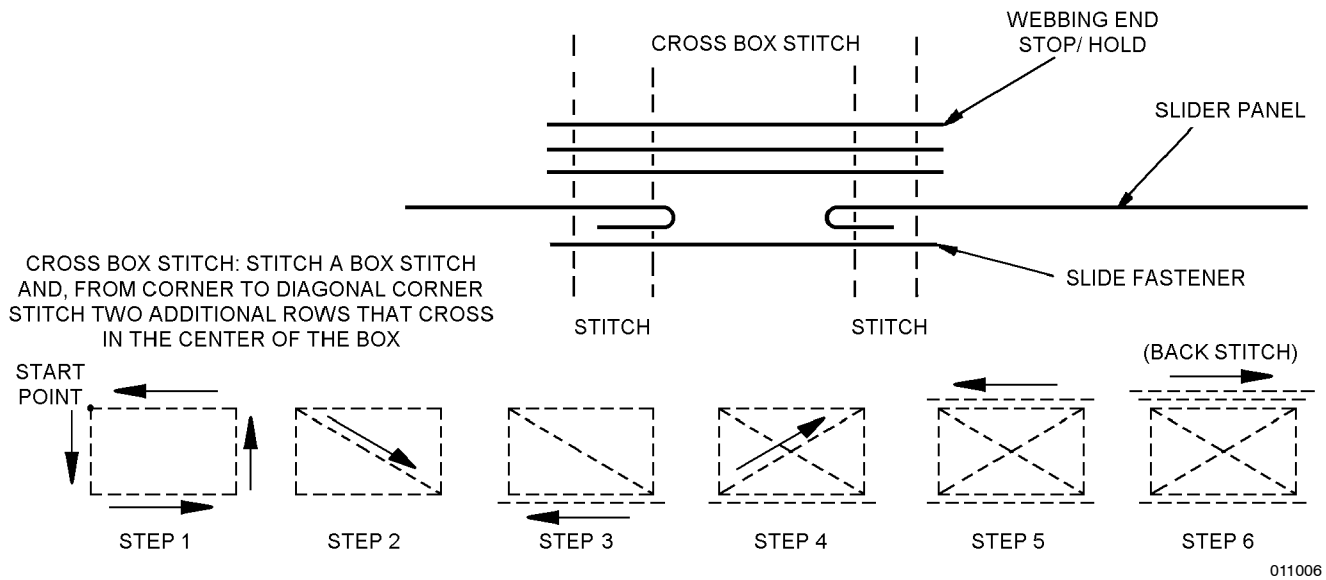

Figure 11-6. 4-Man Survival Kit Bag Webbing Stop/Hold Assembly

b. Cut 115 inches of Type VI suspension webbing, fold in half, slide parachute link V-ring to center fold. Measure and mark 2 1/4 inches from link bar.

c. With link in place spread webbing legs apart to form a "V" at the 2 1/4 inch point (figure 11-8). Sew two rows of stitches at the webbing "V". Measure 14 inches along both legs from link base and lay webbing on the top/bottom panel as shown on figure 11-8. Mark panel for webbing placement. Place webbing on panel and sew each outside edge of the webbing at the 25 1/2 inch marks, using a box stitch.

d. Position one loose end of suspension webbing evenly on top of the other loose end, ensuring there are no twists in the webbing. Starting at the end of the joined pieces of webbing sew a 10 inch long box stitch in the webbing. At the 10-inch mark sew a 1 1/2 x 1 1/2 inch crossbox stitch.

e. Cut 2 pieces Type VI retention webbing 20 inches long. Place 1 piece of webbing at the 1 inch sew line as in figure 11-8 and sew in place using a box stitch. Place other piece of webbing at the 26 1/2 inch sew line as in figure 11-8 and sew in place using a box stitch. Crossbox stitch each intersection of suspension webbing (figure 11-8).

7. Final Assembly.

a. Align top length of slide fastener panel inside out with parachute link/top panel inside out. While noting all center marks, sew panels together, ensuring a minimum of 3/8 inch hem line.

b. Bind all panel edges with 3/4 inch or 1 inch binding tape.

c. Turn kit bag right side out. Weave 10 inches (Type VI) sewn webbing suspension strap through quick release adjustment buckle. Be sure hook of snap faces survival kit bag. Fold webbing end 2 times to equal 3/4 inch fold, and triple stitch lengthwise center folded webbing (figure 11-9).

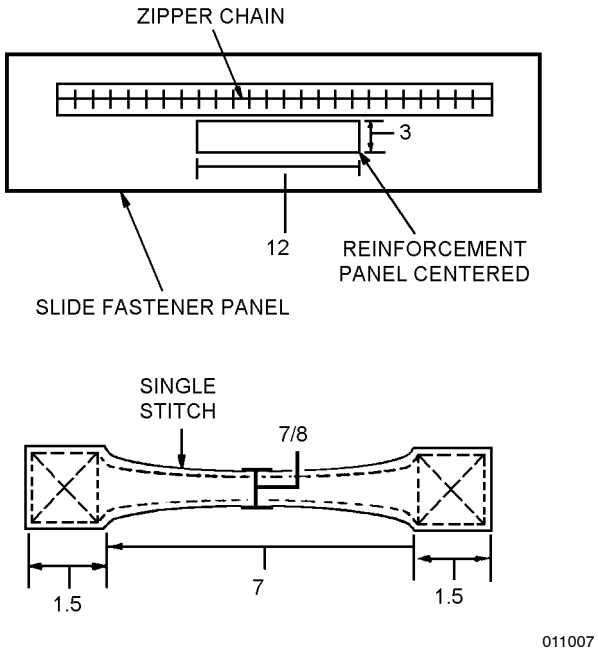

Figure 11-7. 4-Man Survival Kit Bag Handle Assembly

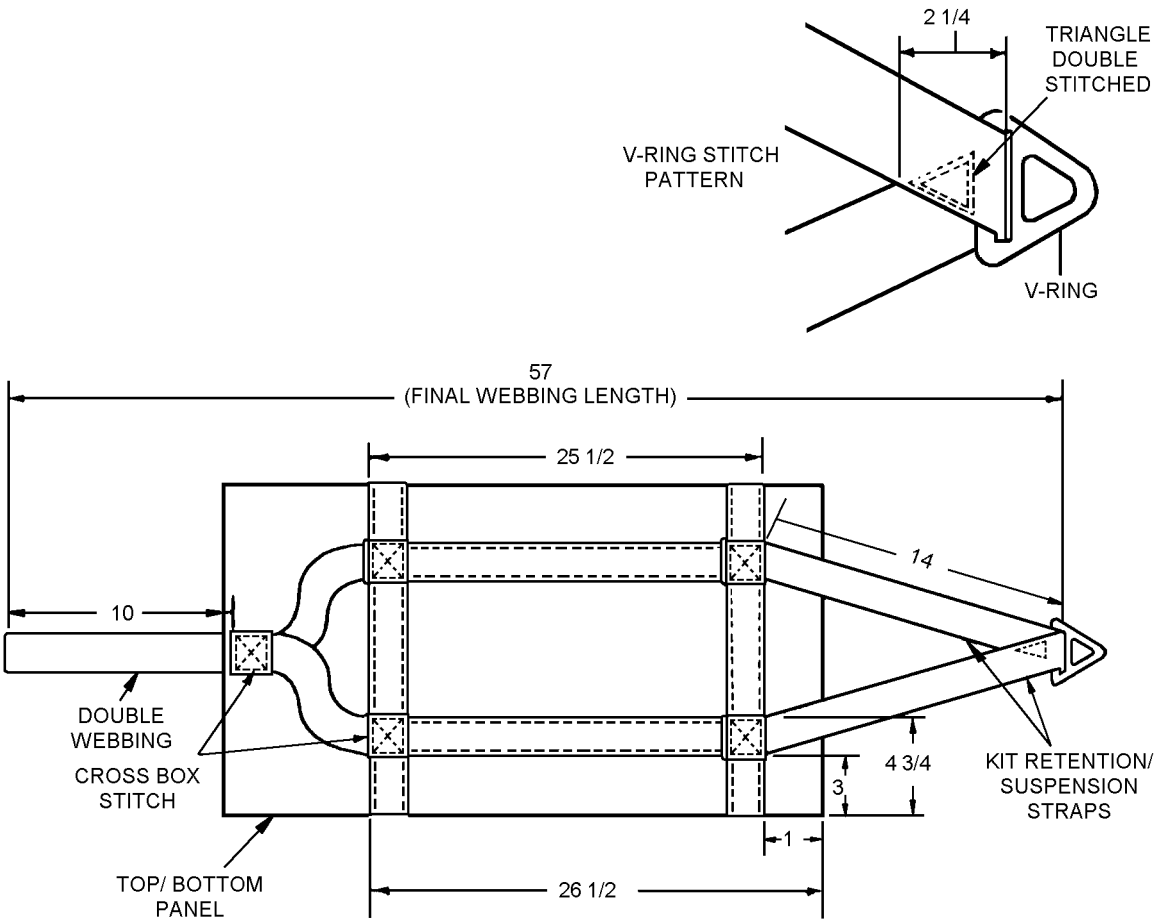

011008

Figure 11-8. 4-Man Survival Kit Bag Suspension Strap Assembly

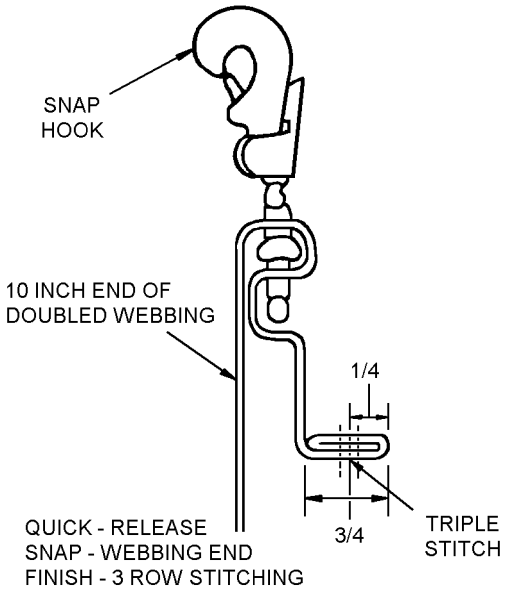

011009

Figure 11-9. 4-Man Survival Kit Bag Final Assembly

11-21. LIGHTWEIGHT EXTREME WEATHER SHELTER PROTECTIVE COVER. To make the protective cover for the 4-man kit, lightweight extreme weather shelter, proceed as follows:

Materials Required

Quantity	Description	Reference Number
As Required	1000 Denier Heavy Weight Cordura Bright Yellow, 60 Inch Wide	Unitex East Coast (800) 556-7254 Unitex West Coast (800) 456-6282
As Required	Webbing, Textile, Type IV, Yellow, 1 1/2 Inch	MIL-W-17337A NIIN 00-262-1665
As Required	Cord, Nylon, Type II, Olive Drab	MIL-C-7515D NIIN 00-782-5415

Materials Required (Cont)

Quantity	Description	Reference Number
As Required	Thread, Size E, Type I, Class A, Yellow	V-T-295 NIIN 00-263-9931
	or	
	Thread, Size E, Type II, Class A, Green	V-T-295 NIIN 00-204-3884
1	Barreloc 1/4 Inch Cord	302-0000 (Note 1)

Notes: 1. May be ordered from:

J. O. King, Inc.
8041-B Arrowridge Blvd.
Charlotte, NC 28273
(800) 333-5058

1. Preparation of fabric pieces.

NOTE

All raw edges of material, webbing and nylon cord ends shall be seared. Cordura fabric shall be seared using a searing machine. All stitching shall be in accordance with ASTM-D-6193, Type 301 lockstitch, 7 to 10 stitches per inch. All stitching shall be 1/2 inch from fabric edge. Back stitch or overlap stitches a minimum of 1/2 inch unless otherwise directed.

2. Cut fabric, webbing and cord into the following pieces:

a. Cut one 30 3/4 x 31 1/2-inch piece of cordura (main body).

b. Cut two 10 1/4-inch diameter circular pieces of cordura (one end piece and one protective cover).

c. Cut one 10 1/4-inch piece of Type IV webbing (assist handle).

d. Cut one 38 inch length of Type II nylon cord (closure).

3. Mark and draw a horizontal line 1 1/2 inches down from one edge of the 30 3/4-inch side of main body material (this will be the top).

4. Fold fabric in half matching the two 31 1/2-inch sides of main body fabric together, and sew using a 1/2-inch seam. Sew only to the 1 1/2-inch mark. Back stitch 1/2 inch at top and bottom of seam.

5. Sew the 10 1/4-inch piece of webbing (assist handle) across the center of one of the 10 1/4-inch circles with three rows of stitches 1/4 inch in from edge at each end of webbing.

6. Sew the 10 1/4-inch diameter circle, with webbing attached, to bottom of main body using a 1/2-inch seam. Turn right side out.

7. Draw a line on the second 10 1/4-inch circular piece of fabric 1 inch down and 6 inches across. Mark the center on the 6-inch line. Fold fabric in 1/2 inch at each end of the 6-inch mark. Tack folds down at each end of the 6-inch marked line. This will hold the folds in place.

8. Align the center mark on the circular piece with the inside seam on the main body aligning the 6-inch line along the marked 1 1/2-inch line.

9. Place the 38-inch piece of nylon cord so one end lays between the 1 1/2-inch open end of main body seam. Fold the top end of main body down to meet the 1 1/2-inch line and sew two rows of stitches along the 1 1/2-inch mark, 1/4 inch apart. Be sure to route nylon cord through folded top of main body while sewing. The opposite end of cord shall be routed out through opening when sewing of top is complete. Ensure protective cover (circular piece) is attached. Opening for cord shall be towards the inside of protective bag.

10. Sear ends of nylon cord and route through hole in Barreloc. Knot ends of cord using an overhand loop knot.

11. Place tent in bag, pull drawstring tight and slide Barreloc down to secure. Tack both cords together 1 inch from Barreloc using two turns Type E thread single. Tie with a surgeon's knot followed by a square knot.

11-22. RIGGING AND PACKING.

11-23. Unless operational requirements demand otherwise, rigging and packing of the 4-Man Cold Weather Survival Kit shall be accomplished at Organizational Level of maintenance.

11-24. RIGGING AND PACKING PROCEDURES. Rigging and packing of the 4-Man Cold Weather Survival Kit are accomplished by following these procedures:

1. Perform inspection of survival items in accordance with Section 11-3.

2. The following survival items shall be packed into 2 qt. aluminum pot:

NOTE

A single asterisk (*) denotes items which shall be removed from original plastic wrapping before stowing. A double asterisk (**) denotes items which shall be removed from original cardboard containers before stowing.

Strike Force Striker*	Whistle
Tinder Blocks (2 pkgs at 4/pkg) or (2 pkgs at 12/pkg**)	Matches*
Nylon Cord (50 Ft)	Replacement Candles (1 pkg)
Rationing cups (2)	Rubber Tubing
	Plastic Bag
	Mirror

3. Pack the equipment container in accordance with figure 11-10.

4. Miscellaneous survival items may be packed into the survival kit bag in any manner which will be the most space efficient. Miscellaneous items denotes the following:

Thermal Protective Aid	Chemical Heat Packs (10)
Fuel Tabs*	Hand Generated Flashlight**
Ice Screws*	Chemilluminescent Lights
Ice Pick	Casualty Blankets**
Candle Lanterns	Pocket Cooker*
Pocket Cooker*	
Duct Tape	
Aircrewman's Cape	

11-25. A safety tie shall be installed on the equipment container bag to prevent pilferage and allow visible detection of tampering with kit. The safety tie shall be installed as follows:

Materials Required

Quantity	Description	Reference Number
As Required	Wire, Non-electrical	QQ-A-225-1 NIIN 00-595-8200
As Required	Seal, Anti-pilferage	81264 or 835267-00 NIIN 00-598-3427

1. Loop one end of a piece of wire through the webbing loop at the end of the slide fastener of the equipment container bag.

2. Thread wire through pull tab.

3. Thread wire through lead seal, pulling to a 1 inch loop.

4. Crimp lead seal and trim wire flush with seal.

5. Make necessary entries on appropriate form in accordance with COMNAVAIRFORINST 4790.2.

11-26. Stencil the outside of both the main equipment container and the protective cover for the extreme weather shelter using 1-inch letters and black laundry ink, (TT-I-542) with the following information:

1. Mark the top of main equipment container with:

   4-MAN COLD WEATHER KIT
   P/N: SRU-A/P99S-1
   S/N:

2. Mark the side of the protective tent cover with:

   4-MAN COLD WEATHER KIT, LIGHTWEIGHT EXTREME WEATHER SHELTER
   P/N:
   S/N:

11-27. STOWING COLD WEATHER SURVIVAL KIT IN AIRCRAFT. To stow the 4-Man Cold Weather Survival Kit in aircraft, refer to local squadron procedures.

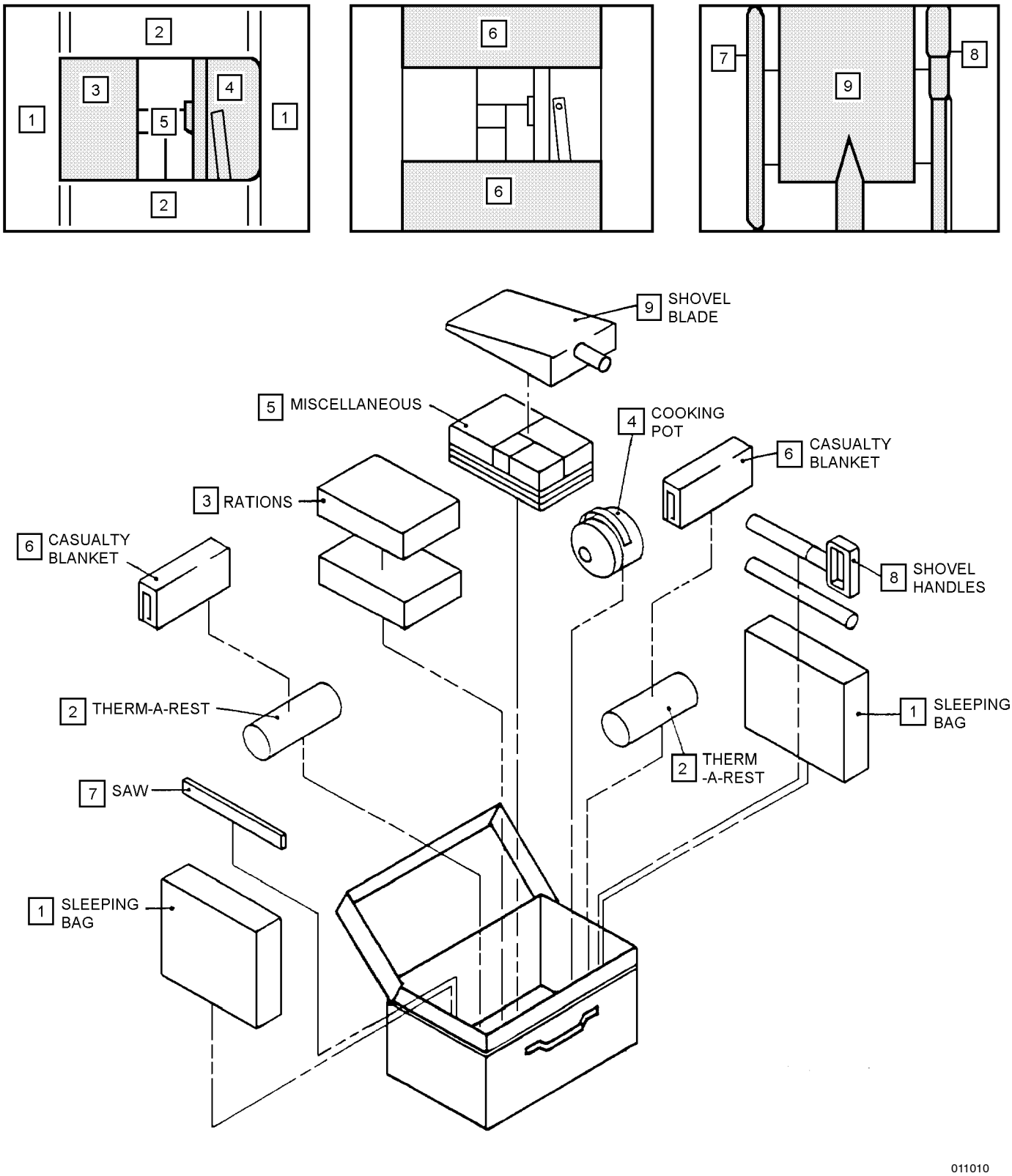

Figure 11-10. 4-Man Cold Weather Survival Kit Packing Diagram

Section 11-2. SRU-A/P99S-2 12-Man Cold Weather Survival Kit

11-28. DESCRIPTION.

11-29. The 12-Man Cold Weather Survival Kit (figure 11-11) is designed to be stowed onboard non-ejection seat aircraft. It is intended for use by twelve aircrew members for land survival situations where average monthly over land temperatures do not exceed 50°F.

11-30. CONFIGURATION.

11-31. The basic survival items packed in the 12-Man Cold Weather Survival Kit are listed in table 11-2. These items are intended to support twelve survivors.

NOTE

The quantity and type of survival items may be varied at the discretion of the Type Commander to suit operational environment. Components of the 12-Man Cold Weather Survival Kit which are not available through supply shall be obtained through local purchase.

11-32. APPLICATION.

11-33. The 12-Man Cold Weather Survival Kit is intended to be stowed onboard non-ejection aircraft as an emergency cold weather survival kit. The items in the kit are in quantities to provide a minimum of 72 hours of additional protection for twelve aircrewmembers in extreme cold weather climates.

11-34. MAINTENANCE.

11-35. Maintenance or repair operations shall be performed by Organizational Level maintenance or above. Maintenance shall be limited to inspection and minor repairs indicated in paragraph 11-40.

11-36. INSPECTION. All 12-Man Cold Weather Survival Kits shall be subjected to Preflight/Postflight, Special and Place-In-Service Inspections.

NOTE

Cold weather survival kits that have been stored during the warm seasons will require a Place-In-Service Inspection prior to returning to service for each cold weather season. During periods of storage, cold weather survival kits shall be stored in a cool dry place.

11-37. Preflight/Postflight Inspection. This inspection is a Visual Inspection performed by the flight crew prior to and after each flight daily and consists of the following:

1. Inspect for integrity of survival kit bag.

2. Inspect security of survival kit closure.

3. Security of attachment of 12-Man Cold Weather Survival Kit to aircraft.

11-38. Special Inspection (30-Day). A 30-Day Special Inspection shall be performed by Organizational Level maintenance on all in-service cold weather survival kits. Perform the 30-Day Special Inspection as follows:

1. Inspect for rips, stains, and loose or frayed stitching on containers.

2. Inspect condition of webbing for wear and fraying.

3. Inspect for loose or missing snaphooks.

4. Inspect snaphooks for ease of operation and corrosion.

11-39. Place-In-Service and 360-Day Special Inspection. The Place-In-Service and 360-Day Special Inspections shall consist of the tasks required for the 30-Day Special Inspection as well as a complete inspection and inventory of each survival kit. Inspect survival items in accordance with Section 11-3. Repair or replace as required. Assemble kits in accordance with paragraph 11-50.

NOTE

All stitches shall be in accordance with ASTM-D-6193, Type 301 Lockstitch, 7 to 10 stitches per inch. Overstitch minimum 1/2-inch.

11-40. REPAIR AND REPLACEMENT.

11-41. Repair of Holes or Tears in Equipment Container Bag.

Materials Required

Refer to paragraph 11-47, Materials Required List.

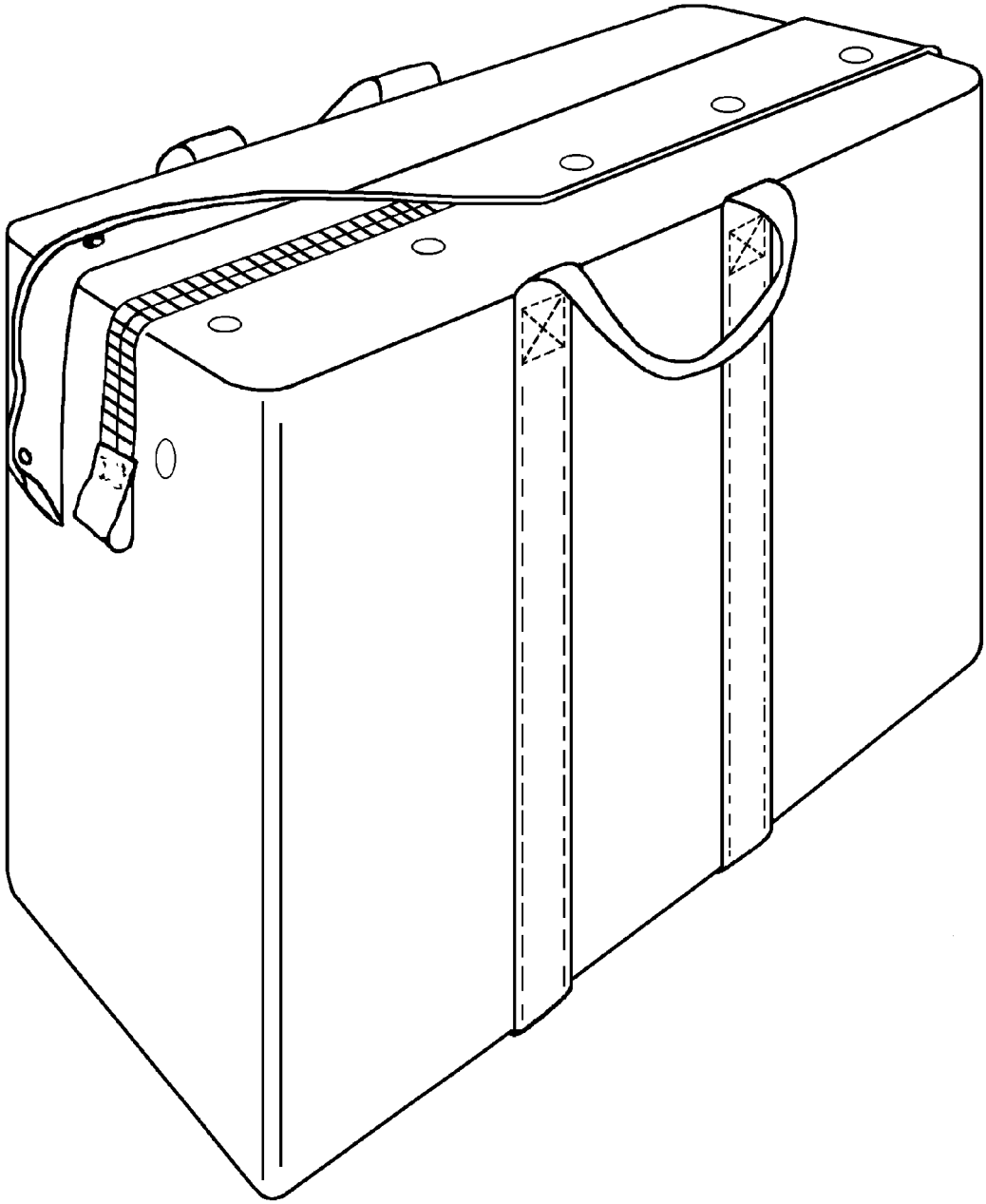

011011

Figure 11-11. SRU-A/P99S-2 12-Man Cold Weather Survival Kit

1. All tears and holes shall have a square or rectangular patch installed on the inside and outside of the defective area.

2. Lay inside of torn or hole area on a flat smooth surface and outline area to be patched using a regular or tailor's chalk with a minimum margin around the torn or hole area of 1 1/2 inches.

3. Cut cordura cloth 1/2 inch larger than the margin made in step 2.

4. Fold the cloth under 1/2 inch on all sides of the repair cloth. Straight pin as necessary.

5. Lay patch over the area made in step 2. There shall be no folds of cloth or pleats. Straight pin as necessary.

6. Sew a row of stitches 1/8 inch from the folded edge of the cordura cloth and another row 1/4 inch in from the first row of stitches, there shall be no folds in the cloth or pleats.

Table 11-2. Survival Equipment – 12-Man Cold Weather Survival Kit

Description	Quantity	Reference Number
Mirror, Emergency Signaling	1	NIIN 00-105-1252, MIL-M-18371
Lights, Chemilluminescent, Green	3	NIIN 01-074-4229, A-A-55134
Lights, Chemilluminescent, Red	3	NIIN 01-178-5559, A-A-55134
Lights, Chemilluminescent, IR	3	NIIN 01-195-9752, 908019
Strike Force Striker	1	Survival Inc. 2633 Eastlake Ave. East Suite 103 Seattle, WA 98102 (206) 726-9363 (888) 237-3239 1WG0411-BX
Tinder Blocks (Note 2)	4	Survival Inc. 2633 Eastlake Ave. East Suite 103 Seattle, WA 98102 (206) 726-9363 (888) 237-3239 1WG0412-BX
Lifeboat Matches	1	Brigade Quartermasters 1025 Cobb International Blvd. Kennesaw, GA 30152-4300 (800) 338-4327 SA30435
Aluminum Candle Lantern	2	Peregrine Outfitters 105 S. Brownell Rd Williston, VT 05495 (800) 222-3088 I002
Replacement Candles	2	Peregrine Outfitters 105 S. Brownell Rd Williston, VT 05495 (800) 222-3088 I008
Fox 40 Whistle	1	NIIN 01-447-8766, FOX40CLASSIC
Tubing, Nonmetallic	6 ft	NIIN 01-345-2256, MO-062
Ration, Cold Weather	4	NIIN 01-267-5864, MIL-R-44277
Ultima Thule Sleeping Bag	6	Wiggy's Inc. 2482 Industrial Blvd. P.O. Box 2124 Grand Junction, CO 81502 (303) 241-6465 (800) 748-1827 WIG20UL
Blanket, Casualty	6	NIIN 00-935-6665, MIL-B-36964
Pocket Cooker	2	Brigade Quartermasters 1025 Cobb International Blvd. Kennesaw, GA 30152-4300 (800) 338-4327 MSC40

Table 11-2. Survival Equipment – 12-Man Cold Weather Survival Kit (Cont)

Description	Quantity	Reference Number
Hexamine Solid Fuel Tabs	1	Brigade Quartermasters 1025 Cobb International Blvd. Kennesaw, GA 30152-4300 (800) 338-4327 TFB97
2 Qt Aluminum Pot w/Lid and Handle	2	Campmor P.O. Box 700 Saddle River, NJ 07458-0700 (888) 226-7667 82008
Rationing Cup 8 oz	6	Campmor P.O. Box 700 Saddle River, NJ 07458-0700 (888) 226-7667 81911
Survival Saw, 15″ Blade	1	Recreational Equipment Inc. 1700 45th St. East Sumner, WA 98390 (800) 258-4567 K404-040
Telescoping Shovel	2	Exploration Products, Inc. 3924 Irongate Rd. Suite C Bellingham, WA 98226 (800) 448-7312 550083
Bag, Plastic, 32 Gal	3	NIIN 01-183-9769, A-A-1668
Cape, Aircrewmember's (Note 3)	3	NIIN 01-040-9018, 3211
Tape, Duct	1 Roll	NIIN 00-103-2254, A-A-2231
Ice Screws, Titanium	4	Exploration Products 3924 Irongate Rd. Suite C Bellingham, WA 98226 (800) 448-7312 P/N 550166
Chemical Heat Packs	20 pr	NIIN 01-395-3018 or Grabber 4600 Danvers Dr. SE Grand Rapids, MI 49512 (616) 940-1914 (800) 423-1233 G-28
Cord, Fibrous, Type 3, Nat.	100 ft	NIIN 00-240-2146, MIL-C-5040
Ice Pick	1	Exploration Products 3924 Irongate Rd. Suite C Bellingham, WA 98226 (800) 448-7312 810001

Table 11-2. Survival Equipment – 12-Man Cold Weather Survival Kit (Cont)

Description	Quantity	Reference Number
Lightweight Extreme Weather Shelter	2	Johnson Camping 625 Conklin Rd. P.O. Box 966 Binghamton, NY 13902 (607) 779-2222 EXT 329 2628911 or The North Face, Inc. 407 Merrill Ave. Carbondale, CO 81623 (970) 704-2300 VE-25
Kit Bag, Flyer's	1	NIIN 00-606-8366
Flashlight, Hand Generated (Optional)	1	NIIN 00-283-9806, MIL-L-8209, Type A9

Notes: 1. If space permits after packing, additional quantities of above listed items may be added to the kit.
2. Tinder blocks are of the same chemical composition as cubes authorized in original message. However, they are now sold in packages of four larger cubes in a slightly different wrapper. Leave cubes in outer-most wrapping. Do not individually unwrap cubes. Two packages of the four-pack may be purchased to replace originally authorized 12 tinder cubes.
3. Aircrewmember's cape can be substituted for the 32 gal. plastic bag.

7. Lay outside of torn or hole area on a flat smooth surface and outline area to be patched using regular or tailor's chalk with a minimum margin around the torn or hole area of 2 inches.

8. Cut cordura cloth 1/2 inch larger than the measurement made in step 7.

9. Fold 1/2 inch under on all sides of the repair cloth. Straight pin fold as necessary.

10. Lay a patch on the area made in step 7. Straight pin patch as necessary.

11. Sew a row of stitches 1/8 inch from the folded edge of the cordura cloth and another row 1/4 inch in from the first row of stitches, there shall be no folds in the cloth or pleats.

12. Quality assurance shall inspect repaired areas.

11-42. Repair of Loose and/or Broken Stitches in Equipment Container Bag. Loose and/or broken stitches shall be repaired by using thread identified in paragraph 11-47.

1. Stitching shall start at a minimum of 1/2 inch prior to the loose and/or broken stitching and continue a minimum of 1/2 inch after the loose and/or broken stitching.

2. Quality assurance shall inspect repaired areas.

11-43. Repair of Torn/Worn or Frayed Webbing or Tape.

NOTE

Webbing or tape shall be considered repairable if the torn/worn or frayed area is 5 inches or less.

1. Use the same type webbing used in manufacturing (paragraph 11-47).

2. Cut webbing 6 inches larger than defective area.

3. Fold 1 inch back on each end of webbing.

4. With folds facing the defective area place cut piece of webbing on the defective area.

5. Webbing shall extend 2 inches beyond torn/worn or frayed area on both ends.

6. Sew a box stitch 1/8 inch from the edge of the webbing.

7. Quality assurance shall inspect repaired areas.

11-44. Replacement of Snap Hooks. Defective/corroded snap hooks (MS22018) shall be removed and replaced. Quality assurance shall inspect repaired area.

11-45. Replacement of Slide Fasteners. Defective/corroded slide fastener shall be removed and replaced. Refer to paragraph 11-47 for installation procedures. Quality assurance shall inspect repaired area.

11-46. FABRICATION.

11-47. EQUIPMENT BAG. To make the equipment container for the SRU-A/P99S-2 12-Man Cold Weather Survival Kit, proceed as follows:

Materials Required

Quantity	Description	Reference Number
As Required	1000 Denier Heavyweight Cordura Bright Yellow, 60 Inch wide	Unitex East Coast (800) 556-7254 Unitex West Coast (800) 456-6282
	Cloth, Laminated, Yellow	MIL-C-43006 NIIN 00-926-1587
48-Inches	Chain, Interlocking, Fastener Slide 120 Inches, Medium Heavy Duty, Olive Drab	V-F-106 NIIN 00-281-4778
	-or-	
48-Inches	Chain, Interlocking, Fastener Slide 108 Inches, Medium Heavy Duty, Green	V-F-106 NIIN 00-281-3052
	-or-	
48-Inches	Chain, Interlocking, Fastener Slide 72 Inches, Medium Heavy Duty, Olive Drab	V-F-106 NIIN 00-286-3175
2	Stop, Interlocking Slide Fastener, Open, Medium Heavy Duty	V-F-106 NIIN 00-276-4939
1	Stop, Interlocking Slide Fastener, Closed, Medium Heavy Duty	V-F-106 NIIN 00-472-8679

Materials Required (Cont)

Quantity	Description	Reference Number
1	Slider and Pull, Reversable, Wire Stirrup	V-F-106 NIIN 00-547-9998
1	Bead	Salvage from Beaded Handle Assembly (P/N 975AS121-11, NIIN 01-120-4752) from LPU-1 or LPU-23 Life Preservers
As Required	Tape, Textile, Type III, 3/4 Inch, Olive Drab	MIL-T-5038 NIIN 00-176-8083
	-or-	
	Tape, Textile, Type III, 1 Inch, Green	MIL-T-5038 NIIN 00-753-6144
	-or-	
	Tape, Textile, Type II, 1 Inch, Yellow	MIL-T-5038 NIIN 00-190-0521
As Required	Webbing, Textile, Type XV, 2 Inches, Olive Drab	MIL-W-4088 NIIN 00-082-2142
	-or-	
	Webbing, Textile, Type II, 1 Inch, Yellow	MIL-W-4088 NIIN 00-262-1643
	-or-	
	Webbing, Textile, Type VI, 1-3/4 Inch, Olive Drab	MIL-W-4088 NIIN 00-281-3013
As Required	Thread, Size E, Type I, Class A, Yellow	V-T-295 NIIN 00-263-9931
	-or-	
	Thread, Size E, Type II, Class A, Green	V-T-295 NIIN 00-204-3884
As Required	Seal, Lead	NIIN 00-598-3427
As Required	Wire, Aluminum, 0.032-inch Diameter, Temper 0	QQ-A-225/1 NIIN 00-595-8200

Materials Required (Cont)

Quantity	Description	Reference Number
7	Stud, Snap Fastener, Style 8	NIIN 00-276-4934 AN227-8B
7	Socket, Snap Fastener, Style 4	NIIN 00-285-6250 AN227-7B
7	Post, Snap Fastener, Style 4	NIIN 00-276-4978 AN227-9B
7	Cap, Snap Fastener, Style 1	NIIN 00-359-6844 AN227-6B

1. Preparation of Fabric Pieces.

NOTE

All cut webbing ends shall be seared. All stitching shall be in accordance with ASTM-D-6193, Type 301 Lockstitch, 7 to 10 stitches per inch. All stitching shall be 3/8 inch from fabric edge. Stitching shall be 1/8 inch from edge of webbing, back stitching or overlap stitching a minimum of 1 inch unless otherwise directed.

a. Cut fabric into the following pieces:

Side/Bottom Panel (1)	23 1/4 x 54-Inches
Slide Fastener Panel (1)	13 1/4 x 64-Inches
Slide Fastener Cover Panel (1)	4 3/4 x 36-Inches
Handle Reinforcement Panel (2)	6 x 9-Inches

b. Layout of panel sides of kit bag. Mark all centers of all edges of panels (figure 11-12) as follows:

(1) Slide Fastener Panel - center topside for slide fastener placement.

(2) Slide Fastener Cover Panel - lengthwise for center reference.

(3) Side/Bottom Panel - 23-1/4 inch edges.

2. Fabrication of Slide Fastener Panel.

a. Remove 1 inch of chain teeth from each end of 35 inch slider chain. Install slide fastener pull tab and install top/bottom stops at each end of the chain teeth.

b. Fold slide fastener in half and mark center.

c. Fold slide fastener panel in half lengthwise and mark center, fold in half widthwise and mark center (figure 11-13).

d. If the slide fastener pull tab has a pull tab on each side, remove and discard one.

e. Ensure slide fastener pull tab is laying against the slide fastener panel and center the removed chain teeth end areas of the slide fastener tape with the lengthwise centerline marks and align the center of slide fastener with the widthwise center marks made in step c.

f. Sew a single row of stitches 1/16 inch from around the outside edge of the slide fastener tape. (boxstitch) (figure 11-13).

g. Turn slide fastener panel over and cut center slide fastener opening (figure 11-13).

h. Fold cut edges under and sew a single row of stitches 1/16 inch from the folds around the slide fastener (boxstitch) (figure 11-13).

i. For the webbing end stop/hold, cut 2 pieces, 11 inches long, of Type VI webbing.

j. Fold into 5-inch loop and fold 1-inch end under loop end. Center webbing over end of tuck at each slide fastener end. Position open loop facing away from slider fastener. Sew using a 1 x 1 3/4-inch crossbox stitch (figure 11-13).

3. Fabrication of Slider/Thong Assembly.

a. Cut and sear 8 inch piece of 3/4 inch webbing.

b. Insert end of webbing through opening on end of pull tab and fold in half lengthwise. Box stitch 3/8 x 1 3/8-inch rectangle 3/4 inch from fold of webbing on pull tab end.

c. Thread webbing through handle bead and move bead close to slide. With webbing ends together fold ends two times 3/8 inch and sew two rows of stitches 1/8 inch from the webbing edge. Move bead close to fold (figure 11-14).

4. Fabrication of Slide Fastener Cover.

a. Cut a 2 inch radius on both corners of one lengthwise side of cover then bind all edges with 3/4-inch tape using one row of stitches.

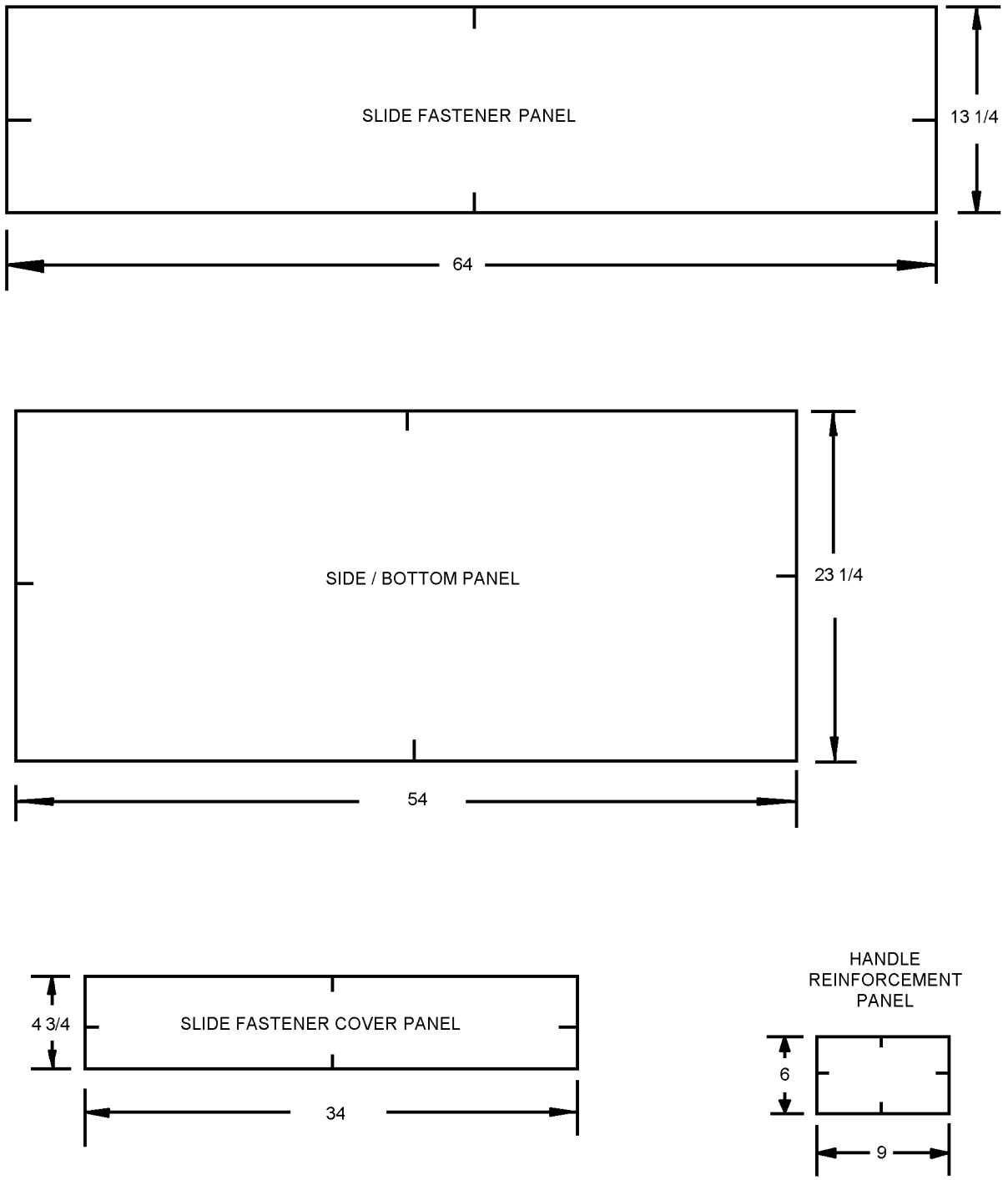

Figure 11-12. 12-Man Survival Kit Bag Fabric Panel Dimensions

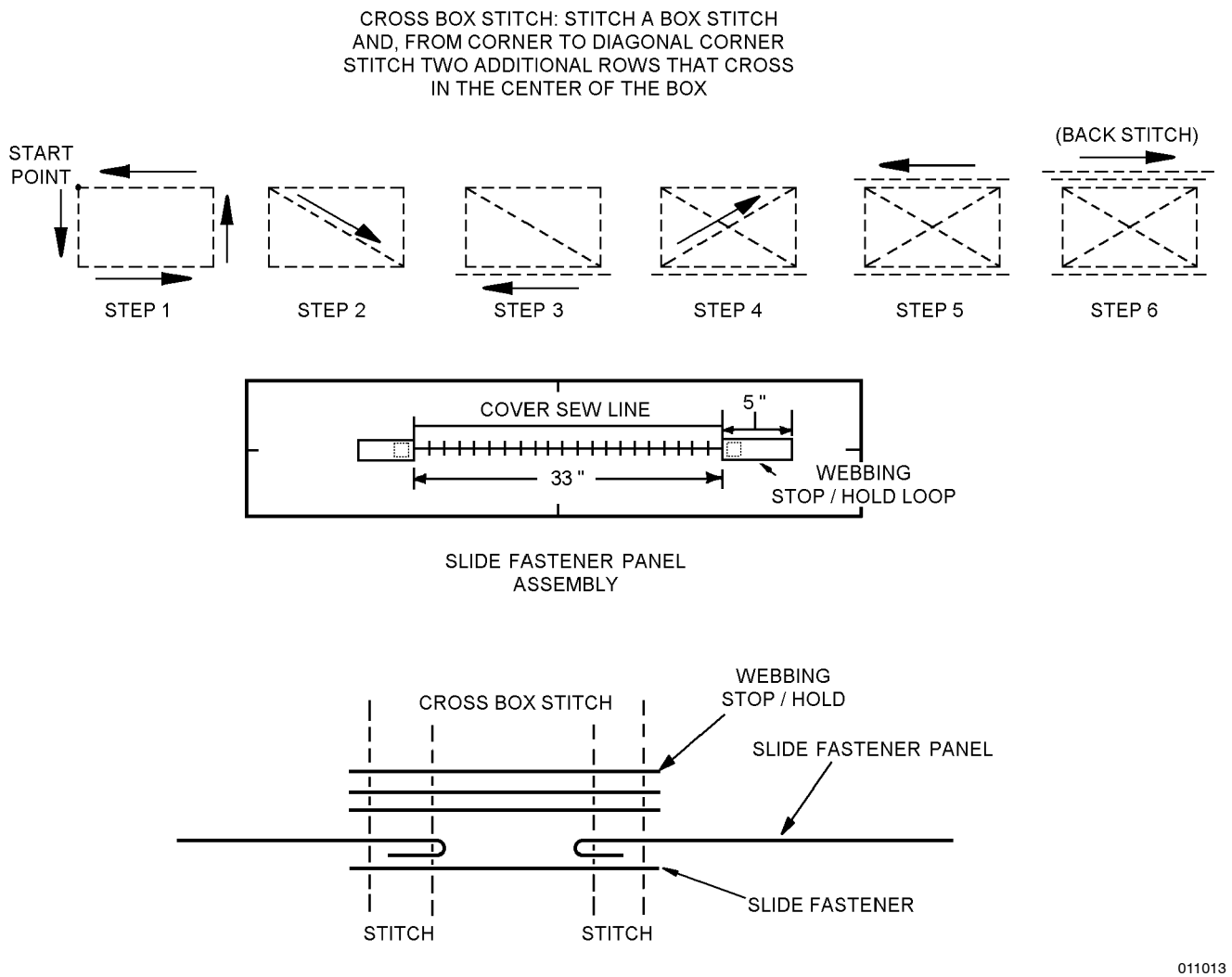

Figure 11-13. 12-Man Survival Kit Bag Slide Fastener Assembly

b. Beginning at lengthwise center mark, on same side as rounded corners, measure 3/4 inch in from outer edge of slide fastener cover and set one snap (cap and socket, cap on smooth side of panel).

c. Measure 5 1/2 inches each direction from center snap and set snaps. A total of 7 snaps will be set.

d. Measure 1 3/4 inch from stitches on either side of slide fastener. Mark sew line for slide fastener cover. Snaps will be set on the other side of the slide fastener. Position long square side of cover on sew line. Sew 2 rows of stitches on sew line: 1/8 inch from edge and 1/4 inch from first row (figure 11-15). Lay slide fastener cover flat, mark location of snaps and set (studs/eyelets).

5. Fabrication of Side/Bottom Panel Handle Assembly.

a. Lay the side/bottom panel out flat. At the center mark of the 23 1/4-inch edge, match the center of the 9 inch reinforcement panel and sew together with a box stitch on side/bottom panel. Sew the remaining reinforcement panel to the center of the opposite end of the side/bottom panel using a box stitch. Reinforcement panels will be on the inside of the finished bag.

b. Turn side/bottom panel over with reinforcement panels towards the table. Measure 1 3/4 inch in both directions from the center of the 23 1/4-inch side of the panel, for both ends of the panel's 23 1/4-inch sides, and mark these dimensions. Using these four marks, draw two lines parallel to the centerline of the 54-inch length of the panel for the webbing inside sew lines (distance between webbing shall be 3 1/2 inch).

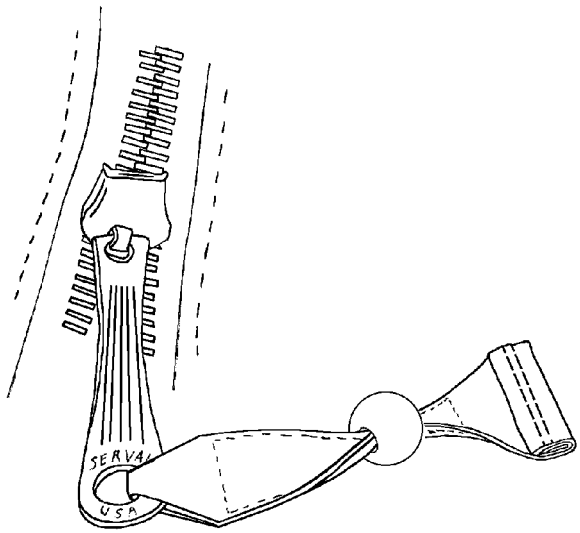

011014

Figure 11-14. 12-Man Survival Kit Bag Slider/Thong Assembly

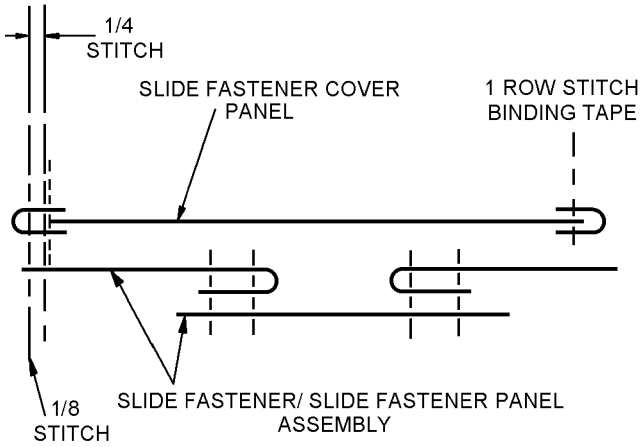

011015

Figure 11-15. 12-Man Survival Kit Bag Slide Fastener Cover Assembly

c. Each of the two handles shall be made from a 70 inch piece of Type VI or XV webbing, and will be made in the same way. Handle grips shall be 14 inches long. Fold one piece of webbing in half and mark the 35 inch center. Make a mark 7 inch on each side of the center. At the handle center point, fold one webbing edge to the centerline, with the fold tapering out to the 7 inch marks on the webbing edge. Sew a row of stitches 1/8 inch from the edge of the webbing from one end of the taper to the other. Repeat process for opposite edge of the webbing handle (figure 11-16).

d. Lay end of webbing handle grip stitching on side/bottom panel 3/4 inch inside the panel edge, and lay remainder of webbing along the outside of the sew line made in step 5.a. (figure 11-16). Sew with 1 3/4 x 2-inch crossbox stitch starting at the 3/4 inch mark. Sew the remainder of the webbing to the side/bottom panel with a box stitch. Sew the other side of the webbing handle and the webbing handle for the opposite end of the side/bottom panel in the same way.

e. Sew a box stitch where the handle webbing free ends overlap at the bottom of the side/bottom panel (figure 11-16).

6. Final Assembly.

a. Fold slide fastener panel and side/bottom panel so all webbing is on the inside. Align center marks of panels. Sew together with 2 rows of stitches 1/4 inch apart forming 3/8-inch hem line.

b. Bind all panel edges with 3/4 inch or 1 inch binding tape. Sew tape to panel edges with a single row of stitches.

c. Turn finished turn kit right side out.

11-48. RIGGING AND PACKING.

11-49. Unless operational requirements demand otherwise, rigging and packing of the Cold Weather Survival Kit shall be accomplished at Organizational Level of maintenance.

11-50. RIGGING AND PACKING PROCEDURES. Rigging and packing of the Cold Weather Survival Kit are accomplished by following these procedures:

1. Perform inspection of survival items in accordance with Section 11-3.

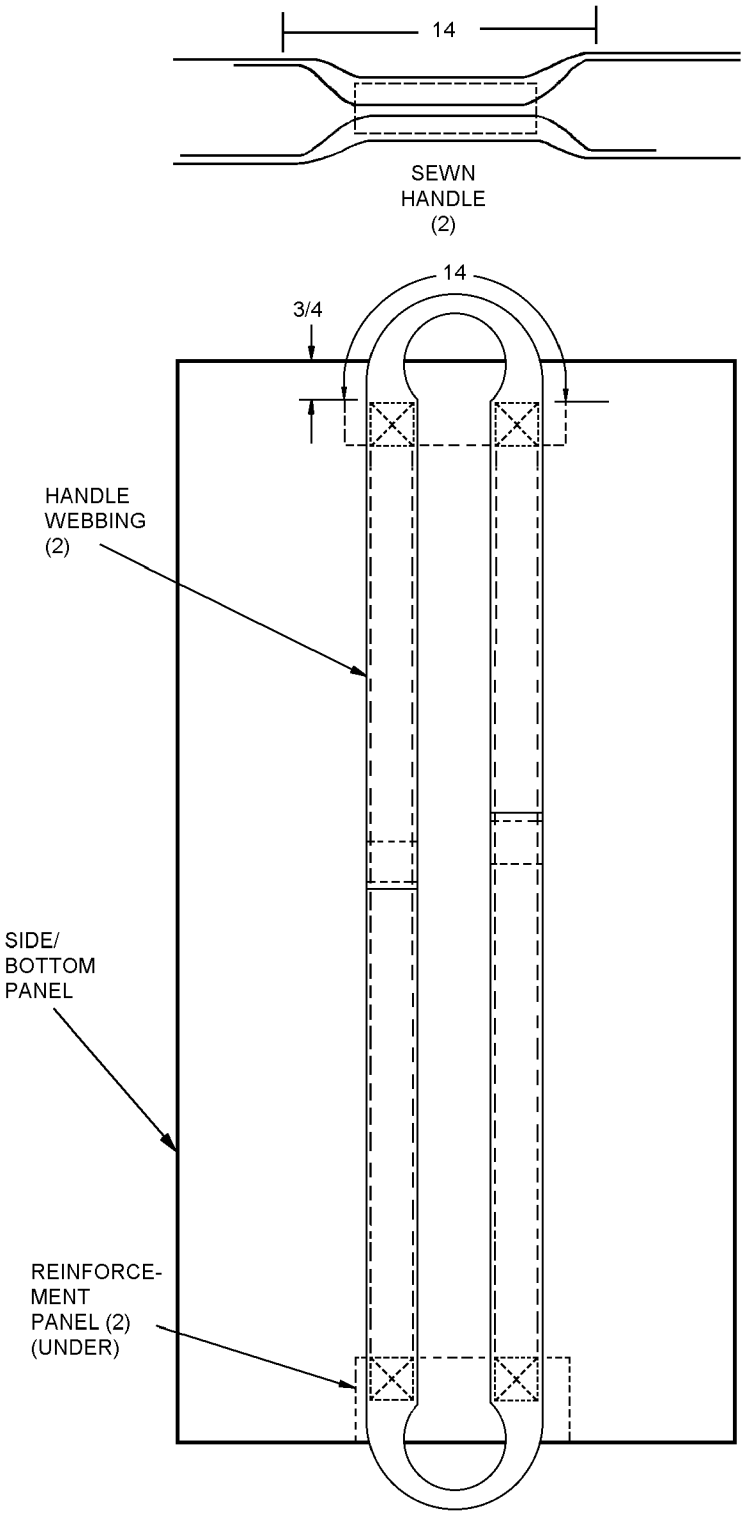

011016

Figure 11-16. 12-Man Survival Kit Bag Side/Bottom Handle Assembly

2. The following survival items shall be divided and packed into both 2 qt. aluminum pots. Each list denotes the contents of one pot:

NOTE

A single asterisk (*) denotes items which shall be removed from original plastic wrapping before stowing. A double asterisk (**) denotes items which shall be removed from original cardboard containers before stowing.

Pot #1
- Strike Force Striker
- Tinder Blocks, (2 pkgs at 4/pkg) or (2 pkgs at 12/pkg**)
- Mirror
- 1 Package Replacement Candles
- 2 Rationing Cups
- Rubber Tubing
- Nylon Cord (50 Ft)

Pot #2
- Plastic Bag
- Matches
- Tinder Blocks, (2 pkgs at 4/pkg) or (2 pkgs at 12/pkg**)
- Whistle
- 1 Package Replacement Candles
- 2 Rationing Cups
- Nylon Cord (50 Ft)

3. Pack the equipment container in accordance with figure 11-17.

4. Miscellaneous survival items may be stowed in the container in any manner which will be the most space efficient. Miscellaneous item denotes the following:

Hand Generated Flashlight**	Duct Tape
Survival Saw	Fuel Tabs*
Chemilluminescent Lights	Ice Pick
Candle Lanterns	Ice Screw*
Casualty Blankets**	Aircrewman's Cape
	Pocket Cooker*
	Chemical Heat Packs (20)

5. Stow the two extreme cold weather shelters in the flyer's kit bag and safety tie in accordance with paragraph 11-51.

11-51. A safety tie shall be installed on the equipment container and the flyer's kit bag to prevent pilferage and allow visible detection of tampering with kit. The safety tie shall be installed as follows:

Materials Required

Quantity	Description	Reference Number
As Required	Wire, Non-electrical	QQ-A-225-1 NIIN 00-595-8200
As Required	Seal, Anti-pilferage	81264 or NIIN 00-598-3427

1. Loop one end of a piece of wire through the webbing loop at the end of the slide fastener of the equipment container bag.

2. Thread wire through pull tab.

3. Thread wire through lead seal, pulling to a 1-inch loop.

4. Crimp lead seal and trim wire flush with seal.

5. Make necessary entries on the appropriate form in accordance with COMNAVAIRFORINST 4790.2.

11-52. Stencil the outside of both the main equipment container and the flyer's kit bag for the extreme weather shelters using 1-inch letters and black laundry ink, (TT-I-542) with the following information:

1. Mark the top of main equipment container with:

12-MAN COLD WEATHER KIT
P/N: SRU-A/P99S-2
S/N:

2. Mark the top or side of the flyer's kit bag for the extreme weather shelters with:

12-MAN COLD WEATHER KIT, LIGHTWEIGHT EXTREME WEATHER SHELTERS,
P/N:
S/N:

11-53. STOWING COLD WEATHER SURVIVAL KIT IN AIRCRAFT. To stow the 12-Man Cold Weather Survival Kit in aircraft, refer to local squadron procedures.

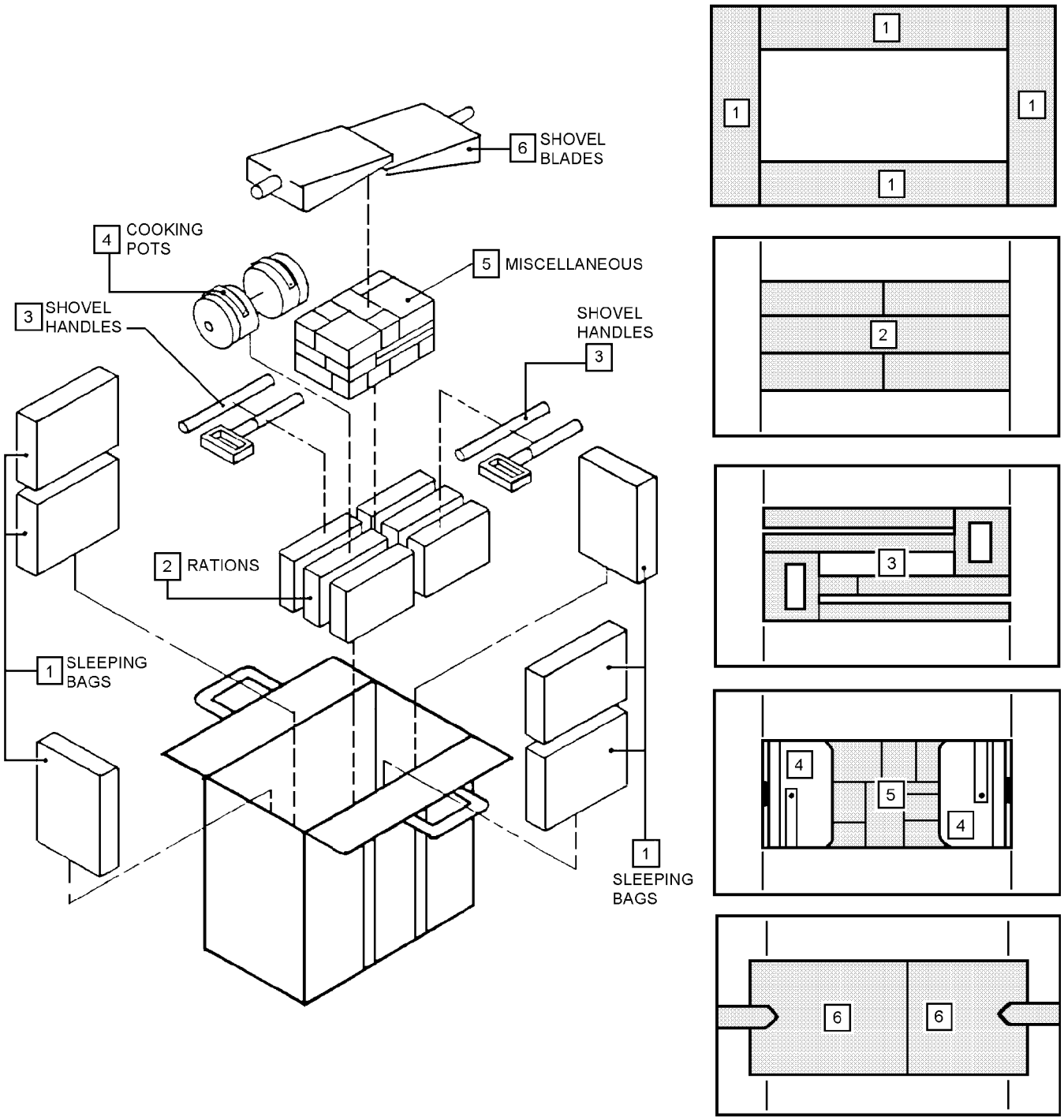

011017

Figure 11-17. 12-Man Cold Weather Survival Kit Packing Diagram

Section 11-3. Cold Weather Survival Equipment

11-54. GENERAL.

11-55. This section contains maintenance and inspection information on survival equipment for the 4- and 12-Man Cold Weather Survival Kits.

Section 11-3.1. Combat Casualty Blankets

11-56. GENERAL.

11-57. Refer to Chapter 19 of this manual for inspection of Combat Casualty Blankets (figures 11-18 and 11-19).

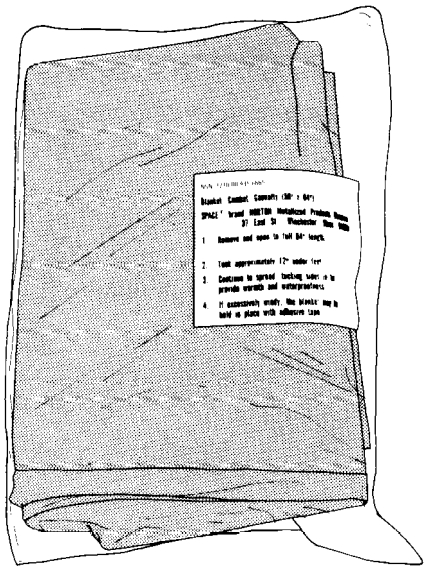

011018

Figure 11-18. Combat Casualty Blanket, Type I

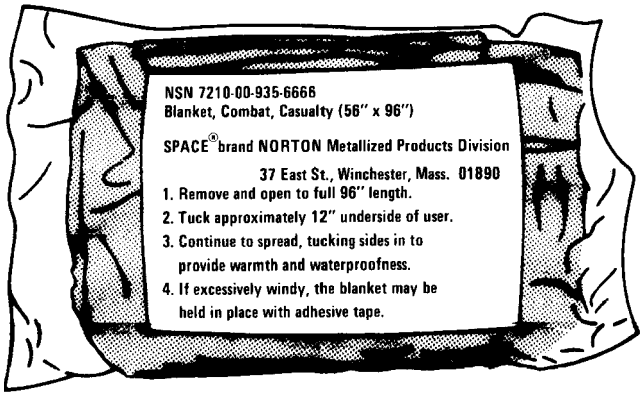

011019

Figure 11-19. Combat Casualty Blanket, Type II

Section 11-3.2. Nylon Cord

11-58. GENERAL.

11-59. Refer to Chapter 19 of this manual for inspection of Nylon Cord (figure 11-20).

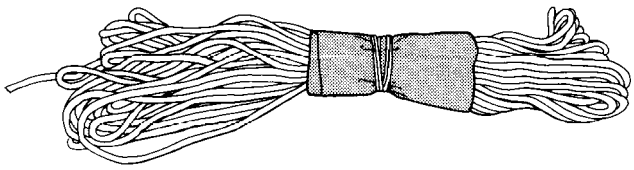

011020

Figure 11-20. Nylon Cord

Section 11-3.3. Mark 4 Emergency Signaling Mirror

11-60. GENERAL.

11-61. Refer to Chapter 9 of this manual for inspection of Mark 4 Emergency Signaling Mirror (figure 11-21).

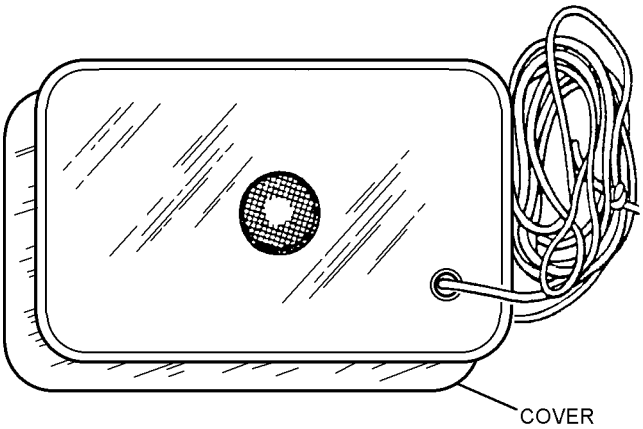

011021

Figure 11-21. Mark 4 Emergency Signaling Mirror

Section 11-3.4. Signaling Whistle, Classic Fox 40, (Black, No-Moving Parts)

11-62. GENERAL.

11-63. Refer to Chapter 9 of this manual for inspection of Classic Fox 40 Signaling Whistle (figure 11-22).

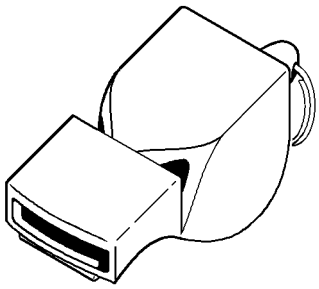

011022

Figure 11-22. Classic Fox 40 Signaling Whistle

Section 11-3.5. Chemical Lights

11-64. GENERAL.

11-65. Refer to Chapter 12 of this manual for inspection of Chemical Lights (figure 11-23).

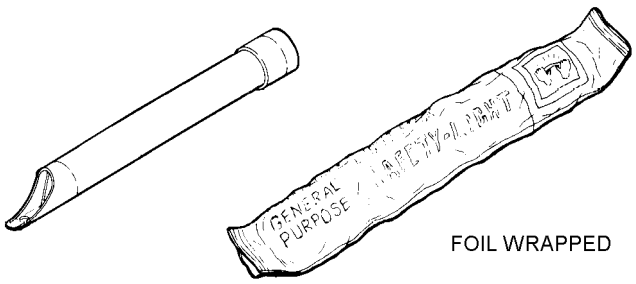

011023

Figure 11-23. Chemical Light

Section 11-3.6. Strike Force Striker

11-66. DESCRIPTION.

11-67. The Strike Force Striker (figure 11-24) is used for producing a large spray of sparks for fire starting. The tinder block used in conjunction with the striker provides a reliable source of fire in conditions where natural tinder cannot be obtained. This tinder is non-toxic, odorless, and smokeless. In addition, the tinder is waterproof and buoyant.

11-68. CONFIGURATION.

11-69. The Strike Force Striker consists of a flint rod and striker blade housed in a durable plastic case. The self-encasing unit includes a tinder block stored inside the end cap. The block is wrapped and sealed in foil for protection. A lanyard connects the striker to the flint rod casing, preventing their separation. When in its closed configuration the tool is 5 x 1 1/4 x 7/8 inches. Additional tinder blocks are strongly recommended and may be acquired in packages of four individually wrapped blocks.

NOTE

The Strike Force Striker and tinder blocks are available through sources listed in table 11-1 or 11-2.

11-70. APPLICATION.

11-71. The Strike Force Striker is to be used for starting fires with the tinder block as well as other sources of tinder. The spray of sparks generated by striking the flint rod with the striker blade is sufficient to start the tinder block burning. Multiple fires can be started by using small portions of the tinder block. The tinder block will work if saturated with water and will continue to burn while floating in water.

11-72. MAINTENANCE.

11-73. Maintenance of Strike Force Striker is limited to inspection.

11-74. INSPECTION. The Strike Force Striker and replacement tinder blocks shall be inspected upon issue and every 90 days thereafter, or at intervals to coincide with the inspection schedule of the kit or assembly in which the items are stored. Inspect the individual tinder cubes to ensure the foil wrappers are undamaged. Shelf life for tinder blocks in a sealed container is five years.

NOTE

If the foil packaging on replacement tinder blocks becomes separated, reseal using duct tape.

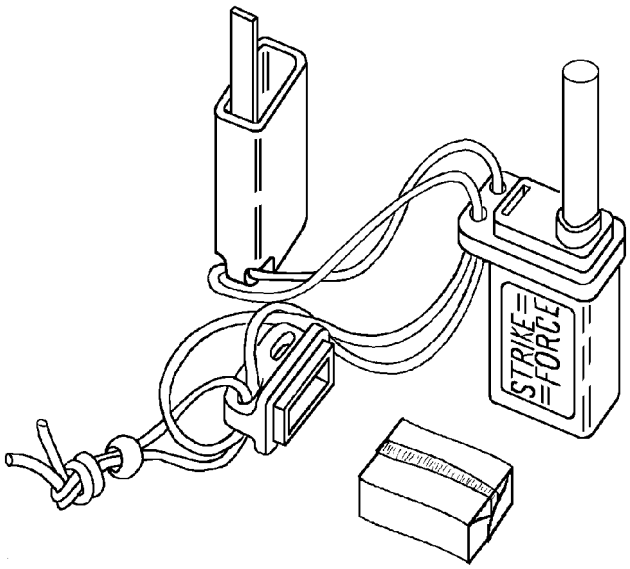

011024

Figure 11-24. Strike Force Striker

Section 11-3.7. Lifeboat Matches

11-75. DESCRIPTION.

11-76. The Lifeboat Matches (figure 11-25) are used to provide a reliable source for starting fires in harsh elements of cold and/or wet environments. These wooden matches have an average burn time of 12 seconds per match.

11-77. CONFIGURATION.

11-78. The Lifeboat Matches are contained in a sealed plastic vial which is 1 inch in diameter and 2 1/8 inches high. The vial contains 25 matches and cotton fibers, which may be used as tinder. Both ends of the vial have striking paper attached for igniting the matches.

NOTE

The Lifeboat Matches are available through sources listed in table 11-1 or table 11-2.

11-79. APPLICATION.

11-80. The Lifeboat Matches are to be used in situations where other fire starting methods are not feasible or available. These matches light when wet and continue to burn through wind and rain.

11-81. MAINTENANCE.

11-82. Maintenance of Lifeboat Matches is limited to inspection.

11-83. INSPECTION. The Lifeboat Matches shall be inspected upon issue and every 90 days thereafter, or at intervals to coincide with the inspection schedule of the survival kit or assembly in which the matches are stored. To inspect the Lifeboat Matches, proceed as follows:

1. Check the integrity of the seal of the vial.

2. Check presence of striking paper. If striking paper is not attached to vial, both on the top of cap and the bottom of cylinder, replace the vial component missing the paper.

3. If the seal is broken, inspect to ensure 25 matches are in the vial. Replace any missing or broken matches.

4. Reseal by taping around vial cap using a 1-inch wide strip of duct tape (NIIN 00-103-2254) or equivalent.

011025

Figure 11-25. Lifeboat Matches

Section 11-3.8. Survival Saw

11-84. DESCRIPTION.

11-85. The Survival Saw (figure 11-26) is provided in the Cold Weather Survival Kits to aid in procurement of shelter materials, fuel for fires, and food. The saw may also be used for leverage, first aid applications, anchors, or stakes.

11-86. CONFIGURATION.

11-87. In its closed configuration, the saw is 17 x 1.5 x 0.5 inches. The cutting blade is 15 inches long and is stowed in a protective metal sheath. The sheath is stowed inside the metal handle. Once the blade is swung out from the sheath, the blade and sheath are inserted together into the handle and secured with a single wing nut.

NOTE

The Survival Saw is available through sources listed in table 11-1 or 11-2.

11-88. APPLICATION.

11-89. The Survival Saw may be used for cutting wood to make shelters and fuel for fires. In addition, the saw can be used in cutting ice or snow blocks for shelter or wind breaks. For first aid treatment, the individual saw components may be used for splints.

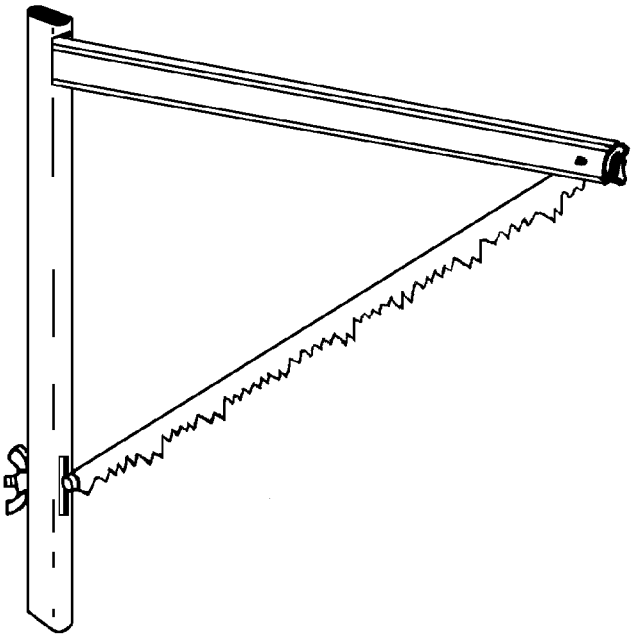

011026

Figure 11-26. Survival Saw

11-90. MAINTENANCE.

11-91. Maintenance of Survival Saw is limited to inspection.

Materials Required

Quantity	Description	Reference Number
As Required	Lubricant, Protective	MIL-L-14107 NIIN 00-292-9689 (or equivalent)

11-92. INSPECTION. The Survival Saw shall be inspected upon issue and every 90 days thereafter, or at intervals to coincide with the inspection schedule of the survival kits or assembly in which the saw is stored. To inspect the Survival Saw, proceed as follows:

1. Upon issue of the saw blade, treat with a thin coat of protective oil.

2. Inspect the saw assembly to ensure all parts are not damaged and will fit together properly.

3. If corrosion has occurred, remove corrosion and recoat blade with protective oil.

Section 11-3.9. Cold Weather Rations

11-93. DESCRIPTION.

11-94. The Cold Weather Ration Packets (figure 11-27) are used in cold weather emergency situations for purposes of quick energy when water, but no other food, is available.

11-95. CONFIGURATION.

11-96. The Ration Packets (NIIN 01-267-5864) consist of airtight packets of main meal selections, instant oatmeal, brownies, cookies, candy and chocolate confections, fruit bars, nut raisin mix, beverage bases, spoon, matches, toilet tissue, chewing gum. The food items are dehydrated and require water for consumption. All items are sealed in a polyethylene bag.

11-97. APPLICATION.

11-98. The ration packet is intended to provide quick energy to the downed aircrewmembers when water, but no other food, is available. The high caloric value of these rations are tailored for use in extreme cold weather survival situations.

11-99. MAINTENANCE.

11-100. Maintenance of Cold Weather Ration packets is limited to Place-In-Service and Visual Inspections.

Materials Required

Quantity	Description	Reference Number
1	Marker, Waterproof	TT-I-544 NIIN 00-281-4432
As Required	Tape, Duct	NIIN 00-103-2254

11-101. INSPECTION. The ration packet shall be inspected upon issue and every 90 days thereafter, or at intervals to coincide with the inspection schedule of the survival kits or assembly in which the ration packet is stored.

11-102. Place-In-Service Inspection. All Cold Weather Ration packets shall be subjected to a Place-In-Service Inspection upon issue. To perform Place-In-Service Inspection, proceed as follows:

1. Using a waterproof marker, mark the packaging date from the cardboard container in which the ration packet was received, on the ration packet.

2. Perform a Visual Inspection in accordance with paragraph 11-103.

11-103. Visual Inspection. All Cold Weather Ration packets shall be subjected to a Visual Inspection, as follows:

1. Inspect to ensure ration packet is properly sealed.

2. Inspect for holes/tears in outer plastic casing. Holes/tears shall be repaired by applying duct tape to the effected area, completely covering the hole/tear.

3. Ensure that shelf life of ration packet does not exceed 6 1/2 years from date of manufacture.

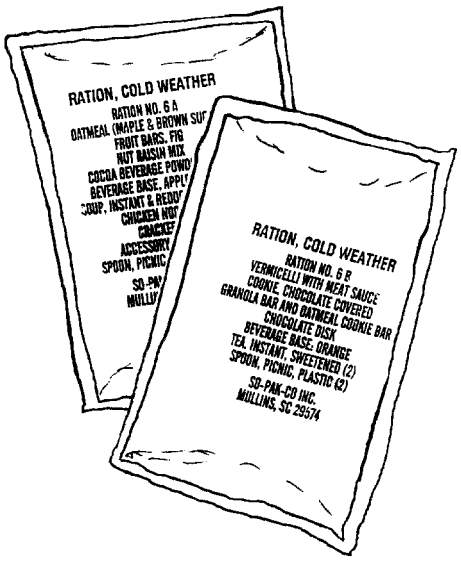

011027

Figure 11-27. Cold Weather Rations

Section 11-3.10. Lightweight Extreme Weather Shelter

11-104. DESCRIPTION.

11-105. Lightweight Extreme Weather Shelters (P/Ns 2628911 and VE-25) are expedition weight dome style tents (figure 11-28). They are used to provide protection from the elements in cold weather environments for a minimum of three persons.

11-106. CONFIGURATION.

NOTE

Lightweight Extreme Weather Shelters are available through sources listed in table 11-1 or 11-2.

11-107. Lightweight Extreme Weather Shelters are free-standing designs that are spacious, low-profile and wind-shedding. The aluminum poles and attachments are made for easy assembly. Lightweight Extreme Weather Shelters have the following approximate dimensions:

Area: 52 square feet
Center Height: 48 inches
Wall Height: 37 inches
Packed Size: 24 x 9 inches

11-108. Lightweight Extreme Weather Shelters may have the following features:

No-See-Um Netting on roof vents, windows, and doors
4 Storage Pockets
Clothesline Rings
Lantern Hooks
Guy ropes with Sliders
Continuous Pole Sleeves of nylon mesh
3/4 Door Slide Fastener
2 Windows and 2 Roof Vents
Waterproof flysheet with vestibule allowing for ten square feet of storage area

11-109. The Lightweight Extreme Weather Shelter (2628911) consists of the large shelter bag (24 x 9 inches packed), which includes the following:

Item	Quantity	Contents
Flysheet	1	—
Tent	1	—
Tent Pole Bag (23.5 x 10 inches)		
	4	Tent Poles (Straight)
	1	Vestibule Pole (Curved)
Tent Stake Bag (10 x 13 inches)		
	2	9 inch Plastic Stakes
	10	7 inch Steel Skewers
	7	12 x .125-inch Nylon Guy Ropes
	7	Small Rope Sliders
	22 inches	1-inch NylonWebbing
	—	Tent Set Up Instructions

011028

Figure 11-28. Lightweight Extreme Weather Shelter

Item	Quantity	Contents
Repair Kit Bag (10 x 12 inches)		
	1	Double Ring With 2 Pins
	1	Double Ring With 1 Pin
	2	Fastex Buckles
	1	No-See-Um Screen
	2	Bottles Seam Sealer
	4	Seam Tape - 1 of each color
	1	Shock Cord
	—	Thread
	—	Needle
	1	1 inch Ring
	2	Triangular Buckles
	4	Shok-lok
	4	Pole Repair Tubes
	4	Grip Clips
	—	23-inch Webbing
	—	Repair Directions

11-110. The Lightweight Extreme Weather Shelter (VE-25) includes the following:

Item	Quantity	Contents
Stuff Sack		
	1	Tent Body
	1	Fly Sheet
	8	Guy Lines
	8	Plastic Stoppers
	1	Tube of Seam Grip
	1	Pole Repair Sleeve
	1	Pitching Instructions
	—	Nylon Line
	—	Line Tighteners
Tent Pole Sack		
	5	Poles
Tent Stake Sack		
	19	Stakes

11-111. APPLICATION.

11-112. The Lightweight Extreme Weather Shelter is intended to provide protection from the elements and to act as a wind breaker, sunshade, and area free of precipitation. The Lightweight Extreme Weather Shelter can withstand snow loads up to four pounds per square foot, and sheds most of the snow load from the flysheet above

the tent. The shelter also can be subjected to severe winds and peak gusts over 73 mph while sustaining only minimal damage. The Lightweight Extreme Weather Shelter can still be used at temperatures below -50°F. The Lightweight Extreme Weather Shelter can be secured to the snow or ground by metal or plastic stakes. Ice screws may be used for securing the shelter to ice or frozen soil.

11-113. MAINTENANCE.

11-114. All Lightweight Extreme Weather Shelters shall be subjected to Place-In-Service, Preflight/Postflight, and Special Inspections. Maintenance for the Lightweight Extreme Weather Shelter shall be limited to Visual Inspection. Holes/tears in the tent, flysheet or tent container bag shall be repaired as follows:

NOTE

All stitches shall be in accordance with ASTM-D-6193, Type 301 Lockstitch, 7 to 10 stitches per inch. Overstitch threads minimum 1/2 inch.

Materials Required

Quantity	Description	Reference Number
As Required	Thread, Nylon Size E, Type II O.D.	V-T-295 NIIN 00-244-0609 or Equivalent
As Required	Cloth, Parachute Pressure Sensitive	MIL-T-43618 NIIN 00-176-1802
As Required	Chalk	SS-C-266 NIIN 00-164-8893 or Equivalent

1. All tears and holes shall have an inside and outside patch installed.

2. Lay inside of torn or hole area on a flat smooth surface and outline area to be patched using regular or tailor's chalk with a minimum margin around the torn or hole area of 1 1/2 inches.

3. Cut pressure-sensitive cloth to fit the minimum margin made in step 2. Round off the corners of the repair cloth.

4. Starting at one end of the repair area, carefully place pressure-sensitive cloth to the repair area and work the cloth flat over the tear or hole. There shall be no air pockets, folds of cloth or pleats.

NOTE

All stitches shall be in accordance with ASTM-D-6193, Type 301 Lockstitch, 7 to 10 stitches per inch.

5. Sew a single row of stitches 1/8 inch from the end of the pressure-sensitive cloth.

6. Lay outside of torn or hole area on a flat smooth surface and outline area to be patched using regular or tailor's chalk with a minimum margin around the torn or hole area of 2 inches.

7. Cut pressure-sensitive cloth to fit the minimum margin made in step 6. Round off the corners of the repair cloth.

8. Starting at one end of the repair area carefully place pressure-sensitive cloth to the repair area and work the cloth flat over the tear or hole. There shall be no air pockets, folds of cloth or pleats.

9. Sew a single row of stitches 1/8 inches from the end of the pressure-sensitive cloth.

10. Quality assurance shall inspect repaired area.

11-115. INSPECTION. Record all inspections in accordance with COMNAVAIRFORINST 4790.2.

11-116. Place-In-Service Inspection (2628911).

1. Prior to issue the flysheet and tent floor seams shall be treated with Seam Sealer provided with shelter. Application of seam sealer is as follows:

a. Set up the shelter using instructions provided with shelter.

b. Invert seam sealant bottle and press top against seams.

c. Draw along seam, spreading the sealer evenly and liberally into all needle holes.

d. Apply sealer to exterior seams on fly and tent floor only.

e. Allow to dry at least 30 minutes.

f. Repeat process for the interior seams of the tent floor.

2. To repack the shelter, proceed as follows:

a. Place repair kit bag and tent stake bag in the bottom of the large shelter bag.

b. Lay flysheet out flat with tent spread flat on top.

c. Fold sides of both layers so that they are approximately 21 inches wide.

d. Place packed tent pole bag at one end of the folded layers and roll the tent and flysheet around the tent poles.

e. Put rolled shelter into shelter bag.

f. Arrange closure flap (circular piece of fabric attached inside shelter bag closure) to cover contents, and pull drawstring as tight as possible.

g. Knot draw string using an overhand loop knot.

h. Make necessary entries on appropriate form in accordance with COMNAVAIRFORINST 4790.2.

11-117. Place-In-Service Inspection (VE-25). The Place-In-Service Inspection for VE-25 shall consist of the tasks required for the 30-Day Special Inspection as well as the 360-Day Special Inspection.

11-118. Preflight/Postflight Inspection. The Preflight/Postflight Inspection is a Visual Inspection performed by the flight crew prior to and following each flight daily and consists of the following:

1. Inspect for rips/tears, holes and loose/broken stitching on shelter container bag.

2. Inspect security of closure.

3. Inspect for security in aircraft.

4. Make necessary entries on appropriate form in accordance with COMNAVAIRFORINST 4790.2.

11-119. Special Inspection (30-Day). A 30-Day Special Inspection shall be performed by Organizational level maintenance on all extreme cold weather shelters as follows:

1. Inspect for rips, stains, and loose or frayed stitching on containers.

2. Inspect to ensure drawstring works properly.

3. Inspect security of closure.

4. Make necessary entries on appropriate form in accordance with COMNAVAIRFORINST 4790.2.

11-120. Special Inspection (360-Day). The 360-Day Special Inspection shall be performed by Organizational Level maintenance. The 360-Day Special Inspection shall consist of the tasks required for the 30-Day Special Inspection as well as the following:

NOTE

Seam sealer for the lightweight extreme weather shelter 2628911 is a one-time use item used during the Place-In-Service Inspection and shall not be included as part of the inventory for the 360-Day Special Inspection.

1. Complete inventory of parts and equipment stowed in large shelter bag.

2. Set up shelter using instructions provided with shelter.

3. Check that all poles contain pliable bungy cords and that the poles are not bent beyond use.

4. Inspect pole sleeves; tent sides, top and floor; and fly for rips/tears, holes, loose or broken stitches.

5. Inspect slide fasteners for presence of pull tabs and ease of operation.

6. Inspect for corrosion.

7. Repair or replace as necessary.

8. Make necessary entries on appropriate form in accordance with COMNAVAIRFORINST 4790.2.

Section 11-3.11. Ultima Thule Sleeping Bag

11-121. DESCRIPTION.

11-122. The Ultima Thule Sleeping Bag is designed to provide protection to an aircrewmember in adversely low temperature conditions. The sleeping bags are designed for extra insulation at the foot and head of the bag. The hood provides direct protection for the head of the user, reducing radiant heat loss. To share maximum body heat, bags are mateable.

11-123. CONFIGURATION.

11-124. The Ultima Thule Sleeping Bag is a mummy style sleeping bag (figure 11-29). It is extra long for heights up to six feet, six inches and wide-body with an inside circumference of 67/68 inches. The bag is closed by a heavy duty slide fastener and a draw string around the hood of the bag. The bag weighs 6 pounds and can be stored vacuum packed with a volume of 450 cubic inches.

NOTE

The Ultima Thule Sleeping Bag is available through sources listed in table 11-1 or 11-2.

11-125. APPLICATION.

11-126. The Ultima Thule Sleeping Bag is to be used by aircrew personnel in situations where body heat must be conserved. The bag is recommended for use in temperatures below 32°F. The bag is to be used in conjunction with the self-inflating ground insulator to provide maximum effectiveness.

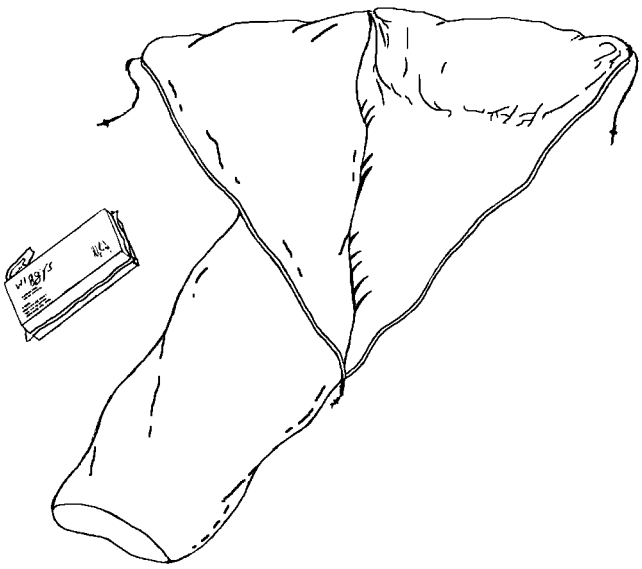

011029

Figure 11-29. Ultima Thule Sleeping Bag

11-127. MAINTENANCE.

Materials Required

Quantity	Description	Reference Number
As Required	Tape, Duct	NIIN 00-103-2254

11-128. Maintenance is limited to inspection of plastic packaging. This plastic packaging consists of two layers. If the outer layer has small holes or tears, but the inner layer is still vacuumed packed, the bag shall continue in service. Repair holes and tears using of duct tape or equivalent. Sleeping Bags which have been opened may be re-vacuumed packed. Dimensions for vacuum packing are denoted as those for WIG20UL (14 1/2 x 9 x 3 inches, with 1/4 inch tolerances). The following source should be contacted for repackaging vacuum packed sleeping bags:

Wiggy's Inc.
2428 Industrial Blvd.
P.O. Box 2124
Grand Junction, CO 81502

(303) 241-6465
(800) 748-1827

11-129. INSPECTION. The sleeping bag shall be inspected upon issue and every 90 days thereafter, or at intervals to coincide with the inspection schedule of the survival kits or assembly in which the sleeping bag is stored. Inspect to ensure integrity of vacuum packing.

Section 11-3.12. Self-Inflating Ground Insulator

11-130. DESCRIPTION.

11-131. The Self-Inflating Ground Insulator (figure 11-30) is used to provide the user with a ground insulator and barrier that will contribute to the user's comfort and sleep.

11-132. CONFIGURATION.

11-133. The Self-Inflating Ground Insulator consists of an airtight, waterproof, nylon coated shell with a lightweight open-cell foam core. The insulator is 20 x 47 x 1 inch and weighs 1.5 pounds.

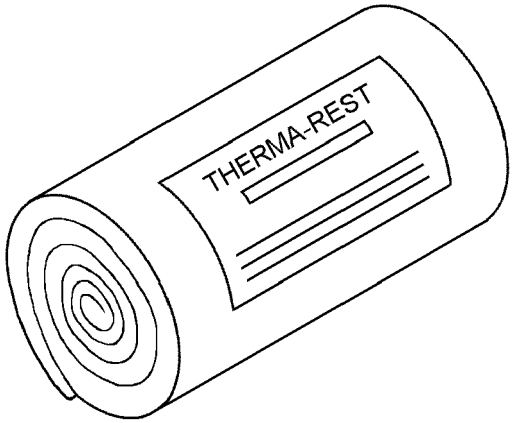

011030

Figure 11-30. Self-Inflating Ground Insulator

NOTE

The Self-Inflating Ground Insulator is available through sources listed in Table 11-1.

11-134. APPLICATION.

11-135. The Self-Inflating Ground Insulator is intended to provide a barrier between the ground and the body using closed cell foam and an air space. This will aid in preventing heat loss through conduction and convection. The insulator is used by opening the airtight valve and allowing the pad to self-inflate. Additional air may be added by breathing into the valve until the desired thickness is attained.

11-136. MAINTENANCE.

11-137. Maintenance of the Self-Inflating Ground Insulator is limited to inspection.

11-138. INSPECTION. The Self-Inflating Ground Insulator shall be inspected upon issue and every 90 days thereafter, or at intervals to coincide with inspection schedule of the survival kit or assembly in which the self-inflating ground insulator is stored. Check the integrity of the insulator's outer plastic packaging. If outer plastic packaging is not able to contain ground insulator, discard plastic and fold insulator to 11 inches wide and roll to 3 1/2 inches in diameter. Wrap two rubber bands around rolled insulator to secure. Inspect rubber bands for deterioration. If insulator has been removed from original plastic packaging, inspect for holes and tears in the insulator shell. Holes and tears no larger than 1 inch may be repaired. All patching of Self-Inflating Ground Insulators shall be performed as follows:

NOTE

Patching of holes, cuts, tears or punctures over 1 inch requires replacement of the self-inflating ground insulator.

Materials Required

Quantity	Description	Reference Number
As Required	Cloth, Life Preserver, Type I, Orange	MIL-C-19002 NIIN 00-060-9136
	- or -	

Materials Required (Cont)

Quantity	Description	Reference Number
	Cloth, Life Preserver, Type I, Sage Green	MIL-C-19002 NIIN 00-935-1759
	- or -	
	Cloth, Life Preserver, Type I, Yellow	MIL-C-19002 NIIN 00-953-6427
1	Roller, Wooden	GGG-R-00620
1	Brush, Acid	NIIN 00-514-2417
As Required	Toluene	TT-T-548 NIIN 00-281-2002
	- or -	
	Methyl Ethyl Ketone (MEK)	TT-M-261 NIIN 00-281-2762
As Required	Cement, Class 3, Polychloroprene	MIL-A-5540
As Required	Talc, Technical	MIL-T-50036A NIIN 01-089-9589
1	Pencil, China	SS-P-196

1. Cut a rounded patch 1 inch larger on all sides than damage.

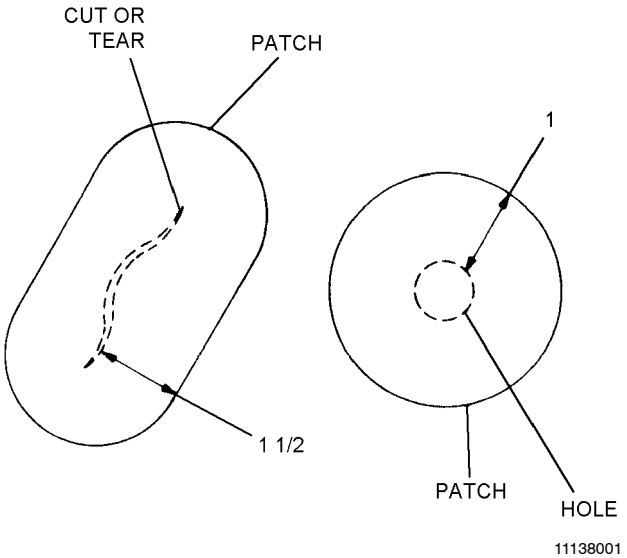

Step 1 - Para 11-138

2. Center patch over damaged area and using a china pencil, trace an outline of patch on fabric.

WARNING

Do not use toluene or MEK near open flame, heat or electrical sparks. Avoid prolonged contact with skin or breathing of fumes. Use only in a well ventilated area.

3. Clean patch and damaged surfaces to be cemented with three applications of toluene or MEK, letting each application dry completely before the next is applied.

4. Prepare cement and accelerator mixture. Prepare only enough mixture for 8 hours use, as this is the effective active period for the mixture. Dispose of any remaining mixture at this time.

5. Using an acid brush, apply cement to completely cover both surfaces to be cemented, taking care not to get cement down into the insulator through the hole or tear. Use long, one-direction strokes and complete each surface before cement becomes tacky as the brush may pull tacky cement from the surface. Allow to dry for 10 minutes.

6. Apply two more coats of cement as in step 5. Use brush strokes perpendicular to the previous direction.

7. When third coat of cement has become tacky, apply patch to damaged surface. If surface damage is a cut or a tear, butt edges of damage before applying patch. Roll out bubbles with a wooden roller.

8. Place a small weight over cemented area and allow cement to cure a minimum of 48 hours.

9. Dust repaired area with talcum powder.

10. Perform a leak test by opening and manually blowing into the black valve until pad is fully inflated (pad shall be firm to the touch). Close the valve. Beginning at the pad end furthest from the patched area, roll up the pad firmly until the patched area is reached. Unroll the pad. If firmness has been lost, inspect pad for holes or tears and repeat patching if applicable.

Section 11-3.13. Chemical Heat Packs

11-139. DESCRIPTION.

11-140. The Chemical Heat Packs are oxygen activated heat packs designed to provide additional heat to the body's extremities in adversely cold conditions (figure 11-31).

11-141. CONFIGURATION.

11-142. The Chemical Heat Packs are two heat packs, each measuring 2 1/2 x 3 inches. Each set of heat packs are individually packaged in plastic.

NOTE

The Chemical Heat Packs are available through sources listed in table 11-1 or 11-2.

11-143. APPLICATION.

11-144. The Chemical Heat Packs will activate when exposed to air. No kneading or shaking required. For maximum effect, the heat packs should be used in enclosed areas such as pockets, boots or gloves. It may be necessary to re-expose the pack to air to continue the chemical reaction. The warmers have a maximum usage time of 7 hours at an average temperature of 135°F. Maximum temperature may reach 156°F. The Chemical Heat Packs should be used to maintain body heat.

NOTE

The packs should not be used to directly treat frost bite or other topical cold weather injuries.

11-145. MAINTENANCE.

11-146. Maintenance is limited to inspection.

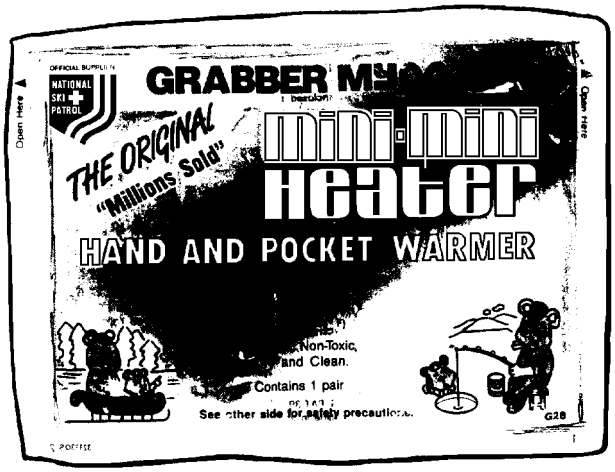

011031

Figure 11-31. Chemical Heat Packs

11-147. INSPECTION. The Chemical Heat Packs shall be inspected upon issue and every 90 days thereafter, or at intervals to coincide with the inspection schedule of the survival kit or assembly in which the chemical heat pack is stored. To inspect the Chemical Heat Packs, proceed as follows:

1. Inspect the plastic packaging for tears or holes which can possibly admit air.

a. If heat pack has been exposed to air, dispose of it.

2. Inspection of the heat packs shall also consist of ensuring that the expiration date of the pack is observed.

3. Make necessary entries on appropriate form in accordance with COMNAVAIRFORINST 4790.2.

Section 11-3.14. Thermal Protective Aid

11-148. DESCRIPTION.

11-149. The Thermal Protective Aid (figure 11-32) is a one piece hooded suit made of silver metalized plastic film on the inside and bright orange on the outside. It is designed to reflect radiant heat back to the individual wearing the suit, thereby increasing the body's temperature.

11-150. CONFIGURATION.

11-151. The Thermal Protective Aid is a one size fits all suit, which can be donned over exterior clothing or directly next to the skin. The suit may be closed at the ankles, wrist, neck, and torso using adhesive closures attached to the suit. The suit is stored in plastic covering.

NOTE

The Thermal Protective Aid is available through sources listed in table 11-1.

11-152. APPLICATION.

11-153. The Thermal Protective Aid provides coverage from head to toe to prevent convective heat loss by the gas-impermeable plastic and radiant heat loss by the reflective foil interior (figure 11-32). Care should be exercised when using this item to avoid sweating in cold weather environments. Adjust looseness of closures to regulate sweating. The bright orange exterior of the Thermal Protective Aid can be used for signaling.

11-154. MAINTENANCE.

11-155. Maintenance is limited to inspection.

11-156. INSPECTION. The Thermal Protective Aid shall be inspected every 90 days or at intervals to coincide with inspection schedule of the survival kit or assembly in which the Thermal Protective Aid is stored. Inspect plastic packaging for holes or tears. Repair holes using duct tape (NIIN 00-103-2254) or equivalent.

NOTE

Figure 11-32 may not depict latest configuration.

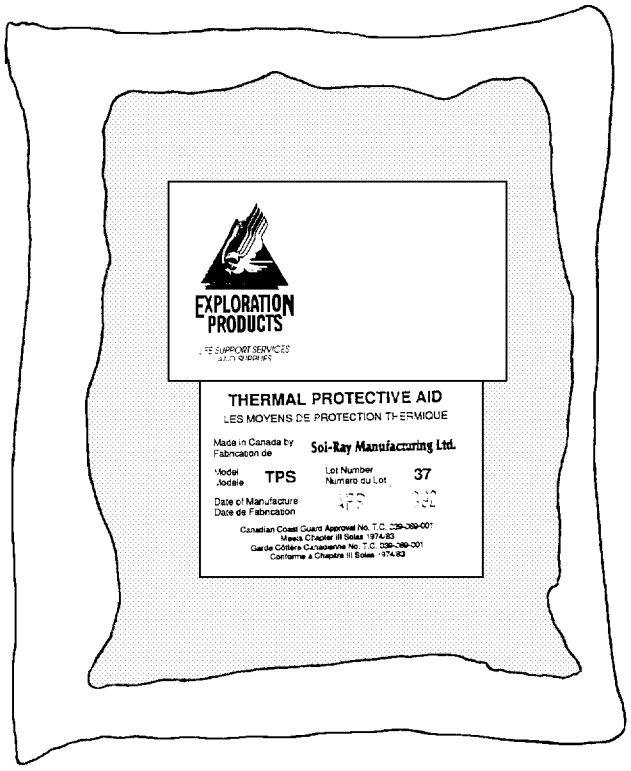

011032

Figure 11-32. Thermal Protective Aid

Section 11-3.15. Aircrewmember's Cape

11-157. DESCRIPTION.

11-158. The Aircrewmember's Cape is a disposable, large plastic bag included in the cold weather survival bag (figure 11-33). The cape is intended to be used for protection from precipitation and wind as well as storage, insulation and gathering of food, ice and snow.

11-159. CONFIGURATION.

11-160. The Aircrewmember's Cape is a polyethylene bag which is opened at one end. The cape is 23 inches across the closed end which is folded with gussets on the sides, and 40 inches across the open end and is 74 inches long.

NOTE

The Aircrewmember's Cape is available through sources listed in table 11-1 or 11-2.

11-161. APPLICATION.

11-162. The Aircrewmember's Cape is intended to be used as protection from precipitation and wind. The cape can also be used as a ground cover when opened up. Other applications include storage of food, waste and ice/snow/water.

11-163. MAINTENANCE.

11-164. Maintenance of the Aircrewmember's Cape is limited to inspection.

11-165. INSPECTION. The Aircrewmember's Cape shall be inspected upon issue and every 90 days thereafter or at intervals to coincide with the inspection schedule of the survival kit or assembly in which the Aircrewmember's Cape is stored. Inspect the cape for rips, tears, and holes.

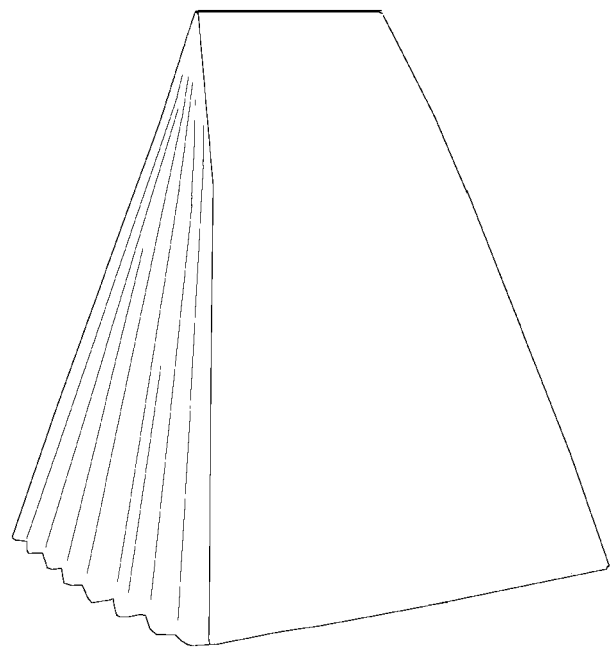

Figure 11-33. Aircrewmember's Cape

Section 11-3.16. Aluminum Candle Lantern

11-166. DESCRIPTION.

11-167. The Aluminum Candle Lantern is used to provide a source of light and heat (figure 11-34). The compactness of the lantern allows it to be stowed in small places and also protects the globe. In addition, the globe maintains a safer environment than other open flame lighting devices.

11-168. CONFIGURATION.

11-169. In its most compact configuration, the Aluminum Candle Lantern is 4 1/2 inches long and 2 inches in diameter. Once extended the lantern measures 6 1/2 inches tall, 10 inches with the hanger extended. The outer casing is Aluminum with a glass globe to allow light through. The lantern is assembled with one 8-9 hour smokeless wax candle. Additional candles may be purchased in sets of three in a plastic bag. These additional candles will be carried in the 12-Man and 4-Man Cold Weather Survival Bags. The lantern should be stowed in the cylindrical plastic container for protection, where applicable.

NOTE

The Aluminum Candle Lantern and replacement candles and glass globes are available through sources listed in table 11-1 or 11-2.

11-170. APPLICATION.

11-171. The Aluminum Candle Lantern shall be used in survival situations where supplemental light and/or heat source is needed. The aircrew may hang the lantern using the extended metal hanger after lighting the candle inside. The spring loaded system inside the lantern will allow the candle to stay at constant height. In addition, a small window in the casing permits aircrew to see the

amount of candle left unburned, allowing changing of the candle without the flame dying out.

11-172. MAINTENANCE.

11-173. Maintenance is limited to inspection.

11-174. INSPECTION. The Aluminum Candle Lantern shall be inspected upon issue and every 90 days thereafter, or at intervals to coincide with the inspection schedule of the survival kit or assembly in which the lantern is stored. To inspect the lantern, proceed as follows:

1. Visually checking that the glass globe is not damaged.

2. Inspecting to ensure the lantern will extend to the fully opened position and will close.

3. Inspecting hanger connections to lantern, ensuring they are snugly fitted.

4. Inspect for corrosion.

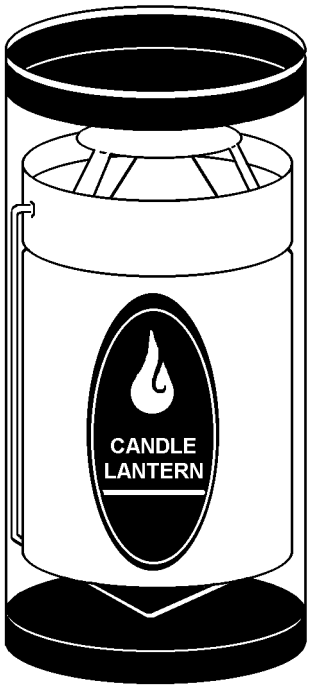

011034

Figure 11-34. Aluminum Candle Lantern

Section 11-3.17. Pocket Cooker

11-175. DESCRIPTION.

11-176. The Pocket Cooker (figure 11-35) is used to provide aircrewmembers with a source of controlled fire, which may be easily lit and extinguished. The cooker allows cooking utensils, such as pots or pans, to be placed over the flame with stability.

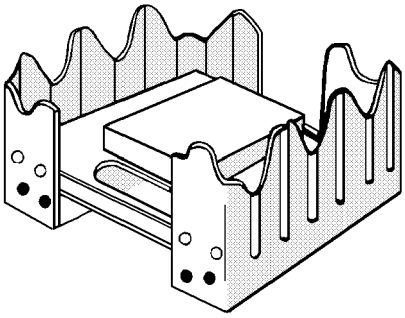

011035

Figure 11-35. Pocket Cooker

11-177. CONFIGURATION.

11-178. This Pocket Cooker in its closed configuration is 4 5/8 x 1 x 3 3/4 inches. Included in the cooker are eight solid hexamine fuel tabs in a cardboard casing. Once opened and fuel tabs removed, the cooker can support cooking pots or flat metal surfaces. Additional solid hexamine fuel tabs are available in packages of eight tabs per unit. These additional fuel tabs will be contained in the 12-Man and 4-Man Cold Weather Survival Kits.

NOTE

The Pocket Cooker and additional hexamine fuel tabs are available through sources listed in table 11-1 or 11-2.

11-179. APPLICATION.

11-180. The Pocket Cooker is intended to provide fire for melting ice and snow, cooking, and warmth when natural sources of fire building materials are

unavailable. The Pocket Cooker may be reused multiple times for survival situations.

11-181. MAINTENANCE.

11-182. Maintenance is limited to inspection.

11-183. INSPECTION. The Pocket Cooker shall be inspected upon issue and every 90 days thereafter, or at intervals to coincide with the inspection schedule of the survival kit or assembly in which the cooker is stored. To inspect the Pocket Cooker, proceed as follows:

1. Inspect to ensure cooker will open and close properly.

2. Inspect to ensure cooker will support weight in its open configuration.

3. Check for corrosion.

4. Check to ensure solid fuel tabs are inside cooker assembly.

Section 11-3.18. 2 Quart Aluminum Pot

11-184. DESCRIPTION.

11-185. The 2 Quart Aluminum Pot (figure 11-36) is a durable container for purifying water, cooking, storage, digging, and collecting water or food.

11-186. CONFIGURATION.

11-187. The 2 Quart Aluminum Pot has a pail-type handle and a removable Aluminum lid which fits snugly on the pot.

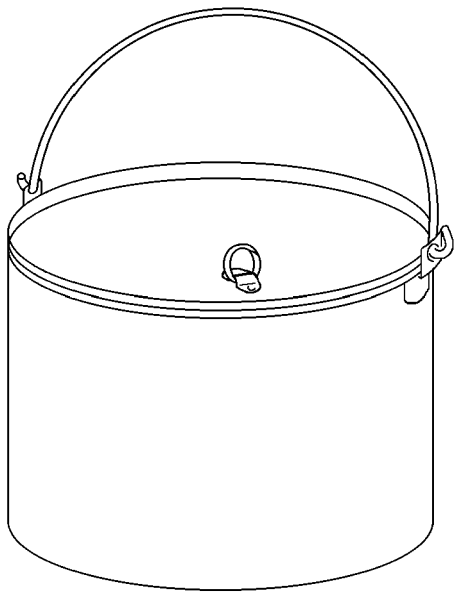

011036

Figure 11-36. 2 Quart Aluminum Pot

NOTE

The 2 Quart Aluminum Pot is available through sources listed in table 11-1 or 11-2.

11-188. APPLICATION.

11-189. The 2 Quart Aluminum Pot is intended to provide an easy method of collecting and boiling water. In addition, the pot can be placed directly over a flame for easy use with pocket cookers. With the inclusion of the handle, the pot may be hung over open fires as well. For separation of salt water, the lid may be used to catch condensation once the water is boiling.

11-190. MAINTENANCE.

11-191. Maintenance is limited to inspection.

11-192. INSPECTION. The 2 Quart Aluminum Pot shall be inspected upon issue and every 90 days thereafter, or at intervals to coincide with the inspection schedule of the survival kit or assembly in which the pot is stored. To inspect the 2 Quart Aluminum Pot, proceed as follows:

1. Visually check for holes, cracks, or dents.

2. Damaged pots may be kept in service if the pot can hold 2 quarts of liquid.

3. Set flat on the pocket cookers.

4. Check for corrosion.

5. Ensure pail-type handle is securely attached to pot.

Section 11-3.19. Rationing Cup

11-193. DESCRIPTION.

11-194. The Rationing Cup (figure 11-37) can be used for a variety of tasks, including drinking, digging, and stowing small items. The polyethylene cup does not enhance cold weather injuries.

11-195. CONFIGURATION.

11-196. The Rationing Cup is a graduated 8 ounce container made from polyethylene.

NOTE

The Rationing Cup is available through sources listed in table 11-1 or 11-2.

11-197. APPLICATION.

11-198. The Rationing Cup is used in cold climate survival situations where metal containers placed up to the mouth may cause cold weather injuries.

11-199. MAINTENANCE.

11-200. Maintenance is limited to inspection.

11-201. INSPECTION. The Rationing Cup shall be inspected upon issue and every 90 days thereafter, or at intervals to coincide with the inspection schedule of the survival kit or assembly in which the rationing cup is stored. Inspection of the Rationing Cup is limited to visually inspection for defects which do not allow the cup to hold 8 ounces of liquid.

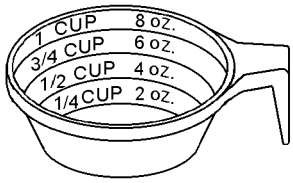

011037

Figure 11-37. Rationing Cup

Section 11-3.20. Telescoping Shovel

11-202. DESCRIPTION.

11-203. The Telescoping Shovel (figure 11-38) is to be used in cold weather environments on frozen ground, snow, and ice.

11-204. CONFIGURATION.

11-205. The Telescoping Shovel blade and shaft are constructed from Aluminum alloy. The shaft of the shovel telescopes from 14 inches to 22 inches using two shaft pieces. The hollow shaft allows for a lighter tool. The shovel also has a D-shaped durable plastic handle to help prevent cold weather injuries. The blade is 10 inches wide by 11 inches long.

NOTE

The Telescoping Shovel is available through sources listed in table 11-1 or 11-2.

11-206. APPLICATION.

11-207. The Telescoping Shovel is primarily for use in cold weather environments, where snow or ice may be prevalent. Its uses may include digging trenches, building snow shelters, or breaking ice. The two shafts can be used as shelter stakes and the blade may be used as a base for pocket cookers.

11-208. MAINTENANCE.

11-209. Maintenance is limited to inspection.

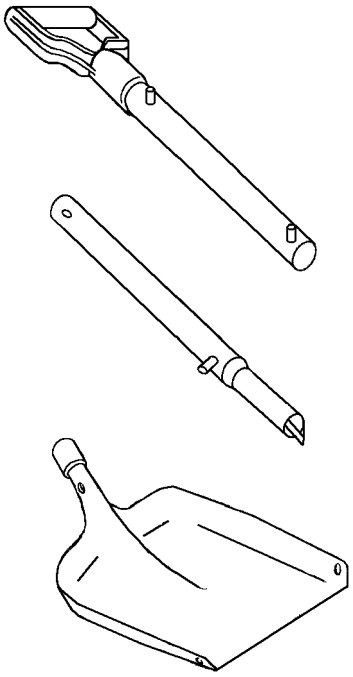

011038

Figure 11-38. Telescoping Shovel

11-210. INSPECTION. The Telescoping Shovel shall be inspected upon issue and every 90 days thereafter, or at intervals to coincide with the inspection schedule of the survival kit or assembly in which the shovel is stored. Inspection of the shovel is assembling the shovel to ensure all parts are not damaged and fit together properly. Check for corrosion.

Section 11-3.21. Ice Screws

11-211. DESCRIPTION.

11-212. The Ice Screw (figure 11-39) is primarily used for the anchoring of shelters to ice, frozen soil, or packed snow.

11-213. CONFIGURATION.

11-214. The Ice Screws are constructed from Titanium alloy and are 7 inches long. The inner diameter of the ice screw is 1/2 inch and the wall thickness is 1/8 inch. The screw has three teeth on one end which are protected by a plastic cap. The top of the screw has a metal loop for attaching lanyards and shelter tie down ropes.

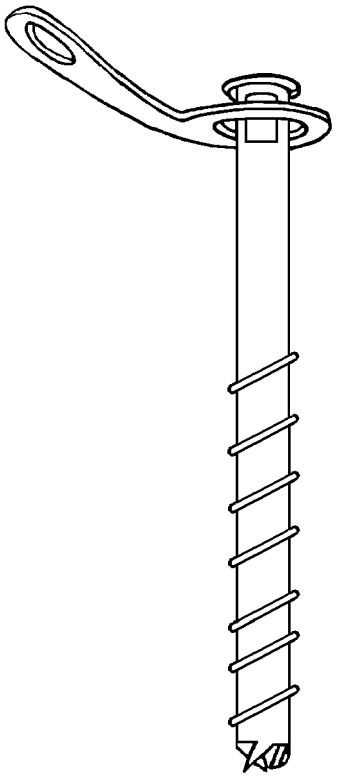

011039

Figure 11-39. Ice Screw

NOTE

The Ice Screw is available through sources listed in table 11-1 or 11-2.

11-215. APPLICATION.

11-216. The Ice Screw is to be used in environments characterized by snow and ice and possibly high wind gusts. The screw is intended for anchoring shelters by drilling holes for stakes, anchoring shelters directly, or both. Other uses include manual drilling through ice to obtain water or attachments for guy lines.

11-217. MAINTENANCE.

11-218. Maintenance is limited to inspection.

11-219. INSPECTION. The Ice Screw shall be inspected upon issue and every 90 days thereafter, or at intervals to coincide with the inspection schedule of the survival kit or assembly in which the Ice Screw is stored. To inspect the Ice Screw, proceed as follows:

1. Inspect the Ice Screw for security of metal ring on top of screw.

2. Inspect for corrosion of metal ring.

3. Ensure the teeth of the screw have a protective plastic cap or some other removable protective cover. Acceptable protective covers include an 8 inch long and 3 inch wide strip of 1000 denier Heavy Duty Cordura wrapped around the end of the screw and secured with two rubber bands.

4. Inspect rubber bands for deterioration. A two inch cube of Styrofoam is also an acceptable cover.

Section 11-3.22. Ice Pick

11-220. DESCRIPTION.

11-221. The Ice Pick (figure 11-40) is a hand held tool with a pick and hammer combination. This tool is to used in cold weather environments.

11-222. CONFIGURATION.

11-223. The Ice Pick is a one piece forged solid steel tool with a nylon vinyl grip which is molded directly to the shank handle. The handle is 11 inches long. The pick also contains a square flat head for use when hammering is needed. This flat head is 3/4 x 7/8 inches. Attach a 18 inch lanyard of Type I nylon cord to the pick through the hole in the handle.

NOTE

The Ice Pick is available through sources listed in table 11-1 or 11-2.

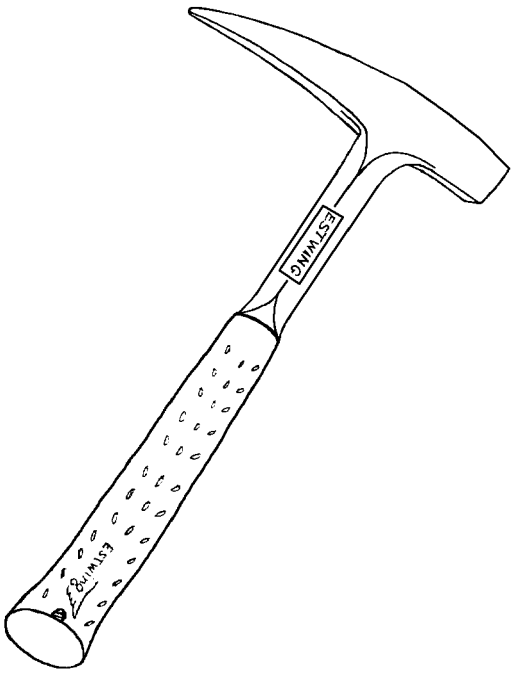

011040

Figure 11-40. Ice Pick

11-224. APPLICATION.

11-225. The pick shall be used primarily in cold environments, characterized by ice and snow. The uses of the pick end of the tool includes chipping ice for water, procurement of ice blocks for shelter, and creating anchoring holes. The square, flat end of the tool may be used as a hammer to break ice chunks or rocks.

11-226. MAINTENANCE.

11-227. Maintenance is limited to inspection. The Ice Pick shall have a lanyard attached through the hole in the handle using an 18-inch length of Type I nylon cord (NIIN 00-240-2146). After threading nylon cord through the hole, bring ends together and tie overhand knot. Trim ends to 1 inch and sear.

11-228. INSPECTION. The Ice Pick shall be inspected upon issue and every 90 days thereafter, or at intervals to coincide with the inspection schedule of the survival kit or assembly in which the pick is stored. To inspect the Ice Pick, proceed as follows:

1. Visually check for corrosion or damage which may hinder the use of the tool.

2. Check integrity of lanyard.

3. Ensure the pick end of the tool has a protective plastic cap or some other removable protective cover. Acceptable protective covers include an 8 inch long and 3 inch wide strip of 1000 denier Heavy Duty Cordura wrapped around the end of the pick and secured with two rubber bands. A two inch cube of Styrofoam is also an acceptable cover.

4. Inspect rubber bands for deterioration.

Section 11-3.23. Rubber Tubing

11-229. DESCRIPTION.

11-230. The Rubber Tubing (figure 11-41) is contained in the cold weather survival kit to retrieve water, create food gathering mechanisms, and first aid applications.

11-231. CONFIGURATION.

11-232. This latex rubber tubing has an outer diameter of 19/64 inches and inner diameter of 9/50 inches. Tensile strength is 3500 pounds per square inch).

NOTE

Rubber Tubing is available through sources listed in table 11-1 or 11-2.

11-233. APPLICATION.

11-234. The intended use of the Rubber Tubing is for retrieval of water from ice holes, cracks in rocks and other water sources. The tubing can also be used for such uses as slingshots or tourniquets.

11-235. MAINTENANCE.

11-236. Maintenance of the Rubber Tubing is limited to inspection.

11-237. INSPECTION. The Rubber Tubing shall be inspected upon issue and every 90 days thereafter or at intervals to coincide with the inspection schedule of the survival kit or assembly in which the Rubber Tubing is stored.

11-238. Place-In-Service Inspection.

1. Inspect the tubing for cracks, holes and contamination.

2. The Rubber Tubing shall be prepared for service as follows:

a. Cut one length of tubing 72 inches in length.

b. Cut one 2 x 5-inch piece of nylon duck material (MIL-C-3953).

c. Accordion-fold tubing in 4 inch bights and wrap material around center of accordion folded tubing.

d. Using a 12-inch length of Type I nylon cord (NIIN 00-240-2146), bring ends of cord together at the center of the material and tie with surgeon's knot followed by a square knot. Trim ends of cord to 1 inch and sear.

e. Position an overhand knot snugly against surgeon's knot.

11-239. Special Inspection (90-Day).

1. Inspect the tubing for cracks, holes and contamination.

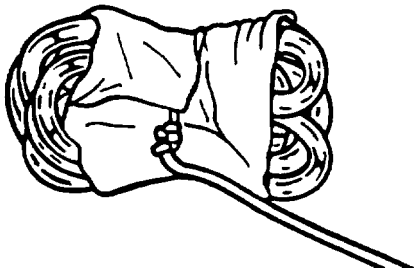

011041

Figure 11-41. Rubber Tubing

Section 11-3.24. Duct Tape

11-240. DESCRIPTION.

11-241. Duct Tape (figure 11-42) is contained in the cold weather survival kit to use as a quick repair for shelters, clothing, and equipment as well as first aid.

11-242. CONFIGURATION.

11-243. The roll of Duct Tape is a 2 inch wide plastic coated cloth back tape which is aluminum or silver in color. This vapor-proof adhesive tape contains 60 yards per roll and has a tensile strength of 25 pounds per square inch.

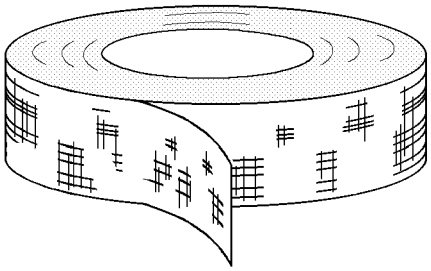

011042

Figure 11-42. Duct Tape

NOTE

Duct Tape is available through sources listed in Table 11-1 or 11-2.

11-244. APPLICATION.

11-245. Duct Tape may be used to quickly repair holes in the extreme cold weather shelter, thermal protective aids, and other equipment contained in the cold weather survival kit. The tape may also be used to wrap metal objects prior to use to help prevent cold weather injuries. Shelters may also be constructed with the aid of the tape. First aid treatment using the duct tape may include construction of splints.

11-246. MAINTENANCE.

11-247. Maintenance of the Duct Tape is limited to inspection.

11-248. INSPECTION. The Duct Tape shall be inspected upon issue and every 90 days thereafter or at intervals to coincide with the inspection schedule of the survival kit or assembly in which the Duct Tape is stored. Inspect the Duct Tape for adhesion.

Section 11-3.25. Plastic Bag

11-249. DESCRIPTION.

11-250. The Plastic Bag (figure 11-43) is included in the cold weather survival bag to be used for protection from precipitation and wind as well as storage, insulation, and gathering of food, ice and snow.

11-251. CONFIGURATION.

11-252. The Plastic Bag is a single wall polyethylene bag which is 39 x 33 inches. The bag has a 32/33 gallon capacity or 75 pound load capacity.

NOTE

The Plastic Bag is available through sources listed in Table 11-1 or 11-2.

11-253. APPLICATION.

11-254. The Plastic Bag is intended to be used as protection from precipitation and wind. The bag can also be used as a ground cover when opened up. Other applications include storage of food, waste and ice/snow/water.

11-255. MAINTENANCE.

11-256. Maintenance of the Plastic Bag is limited to inspection.

11-257. INSPECTION. The Plastic Bag shall be inspected upon issue and every 90 days thereafter or at intervals to coincide with the inspection schedule of the survival kit or assembly in which the plastic bag is stored. Inspect the bag for rips, tears, and holes.

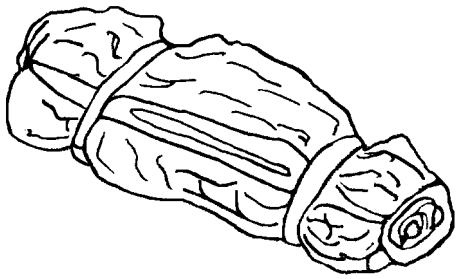

011043

Figure 11-43. Plastic Bag

CHAPTER 12

LIGHTS

Section 12-1. Flashlight Type A-9

12-1. DESCRIPTION.

12-2. The Flashlight Type A-9 (MIL-L-8209) is a hand-generated flashlight which is used on liferafts in emergency situations.

12-3. CONFIGURATION.

12-4. The Flashlight Type A-9 consists of a plastic or metal housing containing a generator, a reflector, and lamp socket. It has an external lever for operating the generator (figure 12-1).

12-5. APPLICATION.

12-6. The Flashlight Type A-9 is intended for use in liferafts. The flashlight is operated by pumping the handle on the flashlight. The handle should be locked when not in use.

12-7. MAINTENANCE.

12-8. Maintenance of the Flashlight Type A-9 is limited to inspection.

12-9. INSPECTION. To inspect the Flashlight Type A-9, proceed as follows:

1. Operate handle to ensure proper function of flashlight.

2. Test spare lamp by removing installed lamp; replace with spare lamp and repeat step 1.

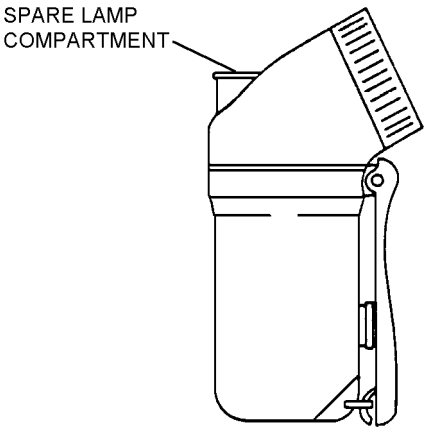

012001

Figure 12-1. Flashlight Type A-9

Section 12-2. Distress Marker Light Types SDU-5/E and SDU-39/N

12-10. DESCRIPTION.

12-11. The SDU-5/E and SDU-39/N strobe lights (figure 12-2) emit a high intensity flashing light, visible for great distances and used to aid in rescue operations.

NOTE

SDU-5/E Distress Marker lights currently in service shall no longer be authorized for use in life raft configurations. Replace the SDU-5/E Distress Marker light with the SDU-39/N Distress Marker light.

The SDU-5/E along with the flash guard is no longer procurable and has been replaced by the SDU-39/N (NIIN 01-411-8535). All in-service SDU-5/E distress lights are still authorized for use until they fail inspection.

12-12. CONFIGURATION.

12-13. The SDU-39/N (NIIN 01-411-8535) is battery operated and capable of emitting high intensity light. The light incorporates blue and infrared filter lenses and uses standard “AA” batteries (NIIN 01-447-0950), (NIIN 01-333-6101) or commercial equivalent.

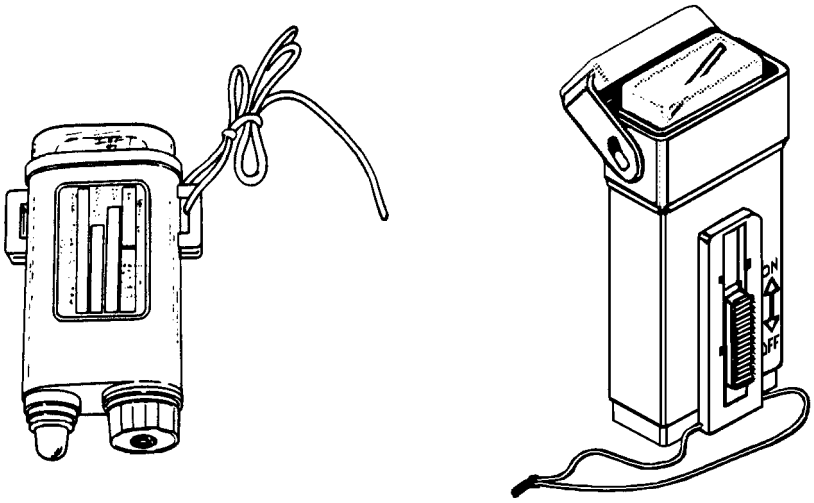

SDU-5/E SDU-39/N

012002

Figure 12-2. Distress Marker Light

NOTE

Batteries for the SDU-5/E can be obtained from the following sources:

a. BA-5374/U (Lithium) NIIN 01-455-9646

b. BA-1574-U
Matthews Associates, Inc.
645 Hickman Circle
Sanford, FL 32771
(407) 323-3390

c. LLB-1
ACR Electronics
5757 Ravenswood Rd
Ft Lauderdale, FL 33312-6645
(954) 981-3333

12-14. APPLICATION.

12-15. The Distress Marker Light is intended for use by aircrew personnel as a visual distress signal. The clear lens is used as a high intensity visual distress signal. The infrared lens is used to avoid detection in a hostile environment. The blue lens is used by SAR Crewmembers as a means of re-establishing visual contact with the aircraft when the aircraft has lost sight of the SAR swimmer or when SAR swimmer is in distress.

12-16. MODIFICATION.

12-17. There are no current directives affecting the distress marker lights.

12-18. MAINTENANCE.

12-19. Maintenance or repair of the Distress Marker Lights shall be performed by Organizational Level or above unless otherwise specified. Maintenance consists of inspection, addition of masking to Distress Marker Light SDU-5/E, addition of hook tape to both distress marker lights, and stowage. Repair and fabrication instructions are listed in table 12-1.

12-20. INSPECTION. Distress Marker lights shall be inspected prior to placing in service, pre-flight, every 90 days or at intervals to coincide with inspection cycle of equipment in which it is installed. Inspect the SDU-5/E Distress Marker Light in accordance with paragraph 12-25. If the AN/TS-23 Test Set is not available, inspect the SDU-5/E manually. The SDU-39/N Distress Marker Light must be inspected manually.

NOTE

Activate only one light at a time to prevent interaction between lights. The lights shall perform in both lighted areas and in conditions of total darkness. If lights do not operate at the required intervals, replace with new batteries and repeat procedure. If light still does not operate, remove light from service.

It is recommended that you acclimate your eyes in total darkness for a minimum of 5-minutes before performing IR lens test.

Failure of the Distress Marker Light during any portion of the place in service inspection renders the unit Non-RFI and shall be reported in accordance with COMNAVAIRFORINST 4790.2.

12-21. Special Inspection. To perform the Special Inspection, proceed as follows:

1. Inspect Distress Marker Light for signs of damage, cracking, corrosion and battery leakage.

Table 12-1. Distress Marker Light Repairs and Fabrications

Description of Repairs or Fabrications	Application	Paragraph
Addition of Masking to Distress Marker Light SDU-5/E	All SDU-5/E Lights	12-28
Addition of Hook Tape to the Distress Marker Light SDU-5/E and SDU-39/N	All SDU-5/E and SDU-39/N Lights	12-29
SDU-39/N Configuration for SAR Swimmers	SDU-39/N Light used by SAR Swimmers	12-31

2. (SDU-39/N) Inspect felt insert in housing for signs of deterioration and security of attachment.

3. Inspect batteries in accordance with paragraphs 12-26 and 12-27.

4. (SAR Swimmers Configuration Only) Inspect for signs of damage, cracking, corrosion, battery leakage and wear of blue colored lens. Re-color areas of lens that have been worn using a blue permanent marker only.

5. Turn light on. Count number of flashes in a 2-minute duration. Light must operate at 50 flashes per minute ±10 flashes.

6. (Non-SAR Swimmers Configuration) Inspect the SDU-39/N in the IR mode for light leakage. Ensure housing is closed over light and IR lens cap is securely attached over lens. In a dark room, acclimate eyes for a minimum of five minutes. Turn SDU-39/N on and check for any white light leakage at all angles. No leakage is allowed.

NOTE

If leakage is detected around the IR lens, ensure IR lens cap is securely in place, then re-inspect. If leakage is detected coming from the bottom of the light, inspect felt insert in housing for security of attachment. Only the ends of the felt insert shall be attached to housing, the remaining felt will be unattached. This was designed and tested to prevent light leakage from emitting through the bottom of the light in the IR position.

7. Inspect on/off clip for attachment and ensure clip is snug. If clip is loose gently squeeze clip sides together to get a tighter fit.

8. Replace light and batteries as required.

12-22. AN/TS-23 TEST SET FOR SDU-5/E DISTRESS MARKER LIGHT. The AN/TS-23 test set (NIIN 01-085-9669) (figure 12-3) is a self-contained and powered, completely portable unit, with a digital alpha-numeric display, capable of checking the complete operational readiness of distress marker lights. It tests lights for operation in a nighttime environment and simultaneously tests flashing rates by means of a digital readout for proper operation in the 50 ±10 flashes per minute (FPM) acceptance range. An automatic test function is also provided to check the battery used with the SDU-5/E lights.

12-23. Installation of Battery Power Supply. The AN/TS-23 test set is shipped without a battery. To install the battery power supply, proceed as follows:

1. Remove the bracket labeled Test Set Battery on the left side of the unit and install a standard BA-1574/U battery.

2. Check unit for proper operation by inserting an operational distress marker light into the trap door on the front panel of the test set.

3. The digital display should light up. It is now ready to test the distress marker light and BA-1574/U battery.

12-24. Test Set Power Supply Battery Replacement. The battery (BA-1574/U) used to power the test set (located on left side of test set) will require periodic replacement dependent upon test set usage. When the digital display becomes dim and difficult to read, the battery should be replaced.

12-25. TESTING THE SDU-5/E DISTRESS MARKER LIGHT. To test the SDU-5E Distress Marker Light, proceed as follows:

1. Insert the Distress Marker Light, light end down, into trap door on front panel of AN/TS-23 test set and seat firmly on foam pad.

2. Push switch on Distress Marker Light to turn light on.

3. Allow light to flash a minimum of two times. Flashing light can be observed through the red window provided to the left of the trap door.

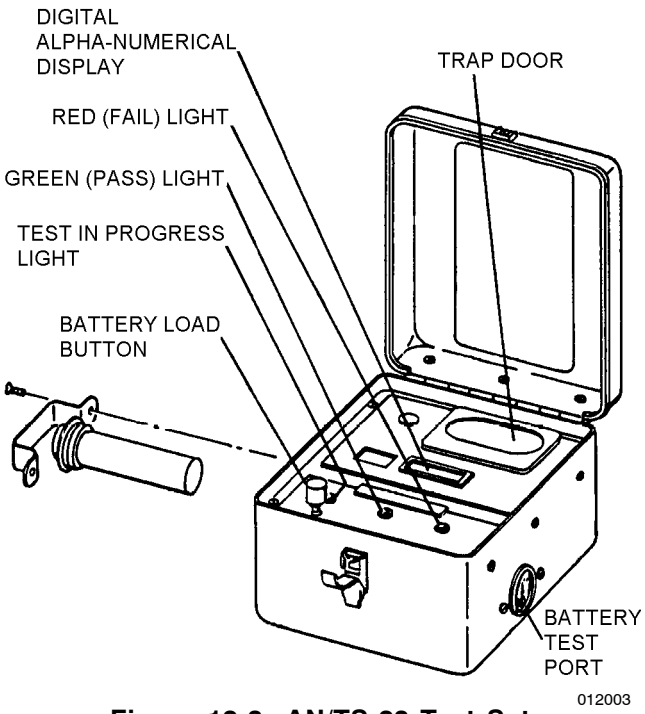

Figure 12-3. AN/TS-23 Test Set

4. Reading on digital display should be 100 to 150 for a good light. This corresponds to a flash rate of 50 ± 10 flashes per minute.

5. At completion of test, remove light and test set will automatically turn off.

12-26. TESTING THE BA-1574/U BATTERY. To test the BA-1574/U battery, proceed as follows:

1. Clean battery and check expiration date. Batteries expire 36 months from date of manufacture.

2. Insert the battery to be tested into the test port provided on the right hand side of AN/TS-23 test set.

3. Push and hold the button marked Battery Load on the front panel of the test set. Test in Progress light will come on.

4. After approximately 5 seconds, either the green (pass) or red (fail) light will come on. A green indication (pass) assures that the battery is safe for at least a 5 hour mission.

5. Immediately after testing, release the Battery Load button and remove the battery being tested.

12-27. TESTING THE BA-5374/U, LLB-1, AND AA BATTERIES. To test the batteries, proceed as follows:

NOTE

Deleted

1. Place-In-Service Inspection for BA-5374/U and LLB-1 Batteries.

NOTE

Installed life for the BA-5374/U and LLB-1 shall be 2 years from date placed into service not to exceed the 60 month shelf life. Batteries shall not expire during a repack cycle.

a. Perform a load test by placing a 100 ohm, 1/2 watt or better load on the battery for 10 seconds. A reading of not less than 6.2 volts should be indicated.

NOTE

The initial load test verifies the new battery is sound.

2. Special Inspections for BA-5374/U and LLB-1 Batteries.

NOTE

Battery must be at room temperature for a minimum of 8 hours before performing test.

a. Attach the leads of a digital multimeter to the corresponding ends of the battery and take a reading. A reading of not less than 5.9 volts should be indicated on multimeter.

3. Place-In-Service and Special Inspection for AA Batteries.

NOTE

Installed life for "AA" batteries shall not exceed the "use by date" or expiration date which ever is identified on the battery or battery package. Batteries only having a "Date of Manufacture" shall expire 3 years from DOM. Batteries shall not expire during a repack cycle.

a. Test the AA batteries using a standard digital multimeter. Attach the leads of a digital multimeter to the corresponding ends of the battery and take a reading. Voltage reading should be 1.5 volts or greater.

4. Replace batteries as required.

5. Record inspection data on appropriate forms in accordance with COMNAVAIRFORINST 4790.2.

12-28. ADDITION OF MASKING TO DISTRESS MARKER LIGHT SDU-5/E. To mask the SDU-5/E for use with the FG-1B flash guard and MXU-507 filter, proceed as follows:

NOTE

Recently procured SDU-5/E distress signal lights will have a painted area added by contractor.

Materials Required

Quantity	Description	Reference Number
1	Light, Signal Inferred Filter	MXU-507 NIIN 00-783-5713
1	Flash Guard	FG-1B NIIN 00-401-2285
As Required	Lacquer, Type I, Black	TT-L-50
7 Inches	Masking Tape 3/4-Inch	—

1. Using tape, mask the portions of the distress signal light as illustrated.

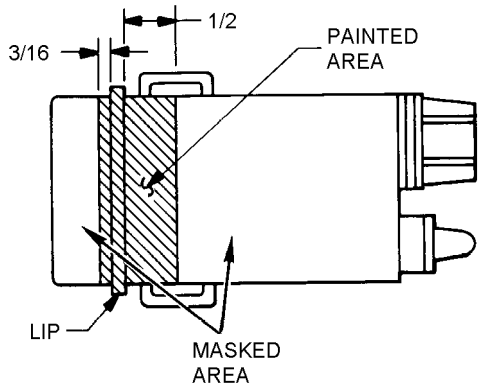

12028001

Step 1 - Para 12-28

2. Spray or brush a minimum of two coats of black lacquer on the exposed area, allowing sufficient time for drying between coats.

3. Remove tape. The light is ready for use with either the flash guard or the filter snugly installed over the clear plastic dome.

12-29. ADDITION OF HOOK TAPE TO THE DISTRESS MARKER LIGHT. To provide easy attachment of Distress Marker Light to aircraft personnel flight gear, proceed as follows:

NOTE

Recently procured SDU-5/E Distress Marker Lights will have masking and hook tape added by contractor.

Materials Required

Quantity	Description	Reference Number
—	Fastener Tape, Hook, Type I	MIL-F-21840 NIIN 00-985-7450
—	Adhesive, Polychloroprene	MIL-A-5540 NIIN 00-515-2246

1. Cut proper size piece of hook tape.

   a. For SDU-5/E – 1 1/2 x 3 inches.

   b. For SDU-39/N – 1 1/2 x 1 1/2 inches.

2. Cement the hook tape to back side of the Distress Marker Light.

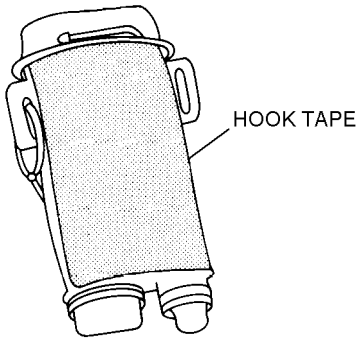

12029002

Step 2 - Para 12-29

WARNING

Light may be inadvertently activated with cap off and may cause night blindness.

12-30. STOWAGE. Stow the SDU-5/E Distress Marker Light with the dome facing down. Stow the SDU-39/N Distress Marker Light with IR Lens Cap snapped securely in place, dome facing down and ON/OFF switch facing inboard towards the wearer. Stow SAR configured strobe light with blue lens facing down.

12-31. SDU-39/N CONFIGURATION FOR SAR SWIMMERS ONLY. The following configuration is for use on the TRISAR Harness and HBU-23/P Rescue Harness only. To configure the SDU-39/N for SAR Swimmers, proceed as follows:

Materials Required

Quantity	Description	Reference Number
As Required	Fastener Tape, Hook, Type I, Black	MIL-F-21840 NIIN 00-454-9063
As Required	Adhesive, Polychloroprene	MIL-A-5540 NIIN 00-515-2246
As Required	Marker, Permanent, Blue or Equivalent	NIIN 01-015-1608

NOTE

Future contracts and procurements of the SDU-39/N will have a switch clip installed on the on/off switch. SAR configured SDU-39/N strobe lights are not required to have the clip installed and the clip can be removed at time of place in service at the discretion of the command.

1. Remove housing assembly from light by grasping the housing with one hand and the body of the strobe light with the other and firmly pull the housing off the body of the light. Retain housing for future use, do not destroy.

2. Using a blue permanent marker only, color the clear lens completely with the blue marker. Let ink dry completely before proceeding.

3. Cut a 1 1/4 inch by 3 1/2 inch piece of hook tape. Glue the hook tape to the back side (opposite switch) of distress marker light. Let glue dry completely before proceeding.

4. Using an etching tool, etch the serial number and contract number on either side of the distress marker light.

Section 12-3. Survivor Locator Light (LPP-1 and -1A Life Preserver)

12-32. DESCRIPTION.

12-33. The Survivor Locator Light is a battery-operated light which is water-activated and used to attract attention of SAR aircraft.

12-34. CONFIGURATION.

12-35. The Survivor Locator Light (P/N 68A94C14-1, CAGE 30003) or suitable substitute (P/N 68A94C13-1) is a small compact unit consisting of a lens, connector wire, and battery case. The light emits a high intensity light visible for many miles and has an operational life of 8 continuous hours (figure 12-4).

12-36. APPLICATION.

12-37. The Survivor Locator Light is attached near the top right side of the flotation assembly to provide maximum visibility. The battery pack hangs below the light to ensure contact with water. When activated, a high intensity light is emitted to attract attention of SAR aircraft, ships, or ground rescue parties.

12-38. MODIFICATION.

12-39. There are no current directives affecting the Survivor Locator Light. Repair or other actions required shall be performed by Intermediate Level or above.

12-40. MAINTENANCE.

12-41. Maintenance or repair of the Survivor Locator Light shall be performed by Intermediate Level or above unless otherwise specified. Maintenance consists of inspection.

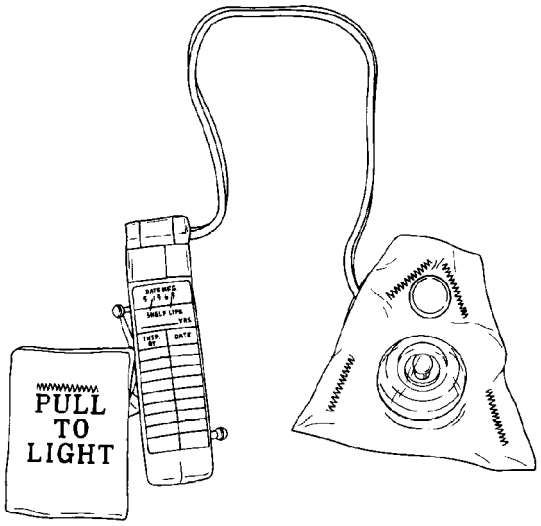

012004

Figure 12-4. Survivor Locator Light

12-42. INSPECTION. To inspect the Survivor Locator Light, proceed as follows:

1. Separate plug from battery pack.

2. Visually check the light for operation as follows:

a. Obtain a known good 1.5 volt dry battery (D cell) and two pieces of light gage wire.

b. Tape, solder, or hold one piece of wire to the negative terminal of the battery. Tape, solder, or hold the second piece of wire to the positive terminal of the battery.

c. Insert the two wires from battery into the two terminals of light assembly plug. If bulb is good, light will illuminate.

3. To check battery pack, proceed as follows:

a. Obtain an ohmmeter, and set to R X 10,000 scale, ensure leads are in proper jacks in ohmmeter.

b. Attach leads from ohmmeter to battery terminals on battery pack. Resistance shall indicate from 10,000 to infinity.

4. If Survivor Locator Light fails inspection, replace.

NOTE

Battery plugs having broken pull tabs should be discarded. However, if a replacement is not available, drill the plug and replace the pull with Type I nylon parachute cord. Battery plugs that are loose can be secured using a rubber band (NIIN 00-285-1787). Annotate on history card that rubber band is installed on light.

5. Reassemble unit by plugging light assembly into battery pack.

6. Record inspection date (quarter and year) on decal and attach to battery pack. Make necessary entries on appropriate forms in accordance with COMNAVAIRFORINST 4790.2.

Section 12-4. Penlight Flashlights

12-43. DESCRIPTION.

12-44. Penlight flashlights are water resistant, battery-operated flashlights with a black finish that emit either a red or white light. Figure 12-5 illustrates typical configuration.

12-45. CONFIGURATION.

12-46. There are several styles of penlights available (NIIN 01-395-5230, NIIN 01-419-4076 and NIIN 01-353-4468).

12-47. The following are the minimum requirements for Penlight flashlights: black finish, (some flashlights may have a rubber head or rubber grip or both), uses "AA" batteries, red and white exchangeable lenses, on/off switch and lanyard attachment point. (Refer to paragraph 12-51 for lanyard attachment point modifications).

NOTE

If the Penlight flashlights procured from supply do not meet the minimum requirements, it must be reported in accordance with COMNAVAIRFORINST 4790.2.

12-48. APPLICATION.

12-49. The flashlights are intended to provide aircraft personnel with a temporary light source. The flashlights may be equipped with a red lens to eliminate any unnecessary glare if used in combat areas.

12-50. MODIFICATION.

12-51. REMOVAL OF FOD HAZARDS. To modify the flashlights for the prevention of possible FOD, proceed as follows:

1. Pocket Clip/Attachment Ring.

a. (For All Flashlights) Remove pocket clip if present.

b. (For flashlights with an attachment ring) Remove attachment ring on tail of flashlight if present. Route lanyard through hole vacated by ring.

c. (For flashlights without the presence of a lanyard attachment point) Cut a 60-inch length of type 1 or 1A nylon cord (MIL-C-5040) and sear ends.

(1) Tie an overhand knot in the one end and wrap end of cord one turn around the neck of light above the rubber ON/OFF switch cover. Tie with surgeons knot and position knot opposite of switch.

(2) Route cord to opposite end of light, just below the hand grip, and tie in the same manner as step (c1).

(3) Secure cord to light just below rubber ON/OFF switch cover using three turns of electrical tape MIL-I-24391. Repeat process at opposite end of light just above the knot.

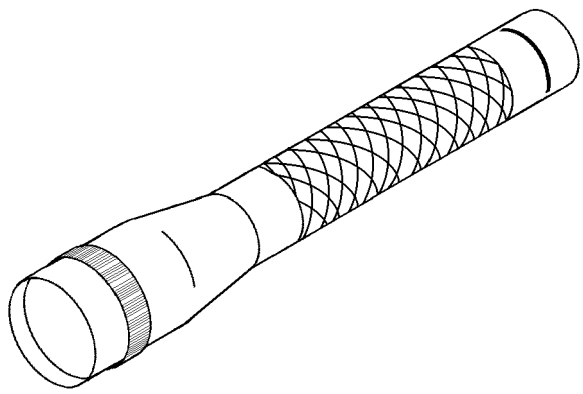

012005

Figure 12-5. Flashlight

(4) Fake remaining cord and secure with rubber band.

2. Lights With Loose or Removable Plastic Lenses.

a. Secure plastic lens in place by placing several beads of glue (white Elmer's glue or equivalent and toothpick or cotton swab) around inside perimeter of lamp head on top of lens.

b. Wipe any excess glue off lens face.

12-52. MAINTENANCE.

12-53. The penlight flashlight shall be inspected every 90 days or at intervals to coincide with the equipment in which it is installed. Maintenance of the Penlight flashlight is limited to a visual inspection and the removal and replacement of batteries and lamp.

12-54. INSPECTION. To inspect the flashlights, proceed as follows:

1. Inspect lamp for operation and corrosion. Replace if necessary.

2. Check lenses for scratches, clarity, and (for lights with removable plastic lenses) security of glue. (See paragraph 12-51 for FOD modification).

3. Inspect batteries for corrosion or leakage, and replace if necessary.

NOTE

Use alkaline batteries (NIIN 00-985-7845) or Lithium batteries (NIIN 01-333-6101).

4. Inspect lanyard for security of attachment. Replace lanyard as necessary.

Section 12-5. Chemical Lights

12-55. DESCRIPTION.

12-56. The Chemical Light is a foil-wrapped plastic wand which emits a chemically activated light useful during nighttime rescue operations.

12-57. CONFIGURATION.

12-58. The Chemical Light is a plastic wand that encases two chemicals, one of which is in a thin glass vial. When the plastic wand is flexed and shaken, the vial breaks, the two chemicals mix, and light is emitted.

12-59. Six-hour general purpose Chemical Lights are available in four-inch (NIIN 00-106-7478) and twelve hour six-inch (NIIN 01-074-4229) sizes; these emit a green light. A thirty-minute high intensity yellow (NIIN 01-074-4230) and a five minute orange light (NIIN 01-247-0363) are also available. Each light is foil-wrapped to protect it from humidity and to increase its shelf life (figure 12-6).

NOTE

A six-inch, twelve-hour red, a six-inch, twelve-hour green and a six-inch, three-hour, infrared chemical light are used in the Cold Weather Survival Kits (Chapter 11, tables 11-1 and 11-2).

The five minute (NIIN 01-247-0363) and the twelve hour (NIIN 01-074-4229) chemical lights shall be replaced by cyalume S.O.S. chemical lights for life preserver application.

12-60. APPLICATION.

12-61. The Chemical Light is intended to aid in locating downed aircrewmembers and assist SAR crewmembers during nighttime rescue operations.

12-62. MAINTENANCE.

12-63. Maintenance of the Chemical Light is limited to inspection.

12-64. SPECIAL INSPECTION. The Chemical Lights shall be inspected at time of place in service, every 90 days or at intervals to coincide with the equipment in which it is installed. To inspect, proceed as follows:

NOTE

The shelf life of the Chemical Light is 48 months when left in an undamaged foil wrapper. The shelf life for the six-inch infrared chemical light is 36 months when left in an undamaged foil wrapper.

1. Inspect foil wrapper for puncture or tears. If damage exists, discard chemical light and replace.

2. Inspect expiration date on foil wrapper. Chemical lights cannot expire during a repack cycle. Replace when required.

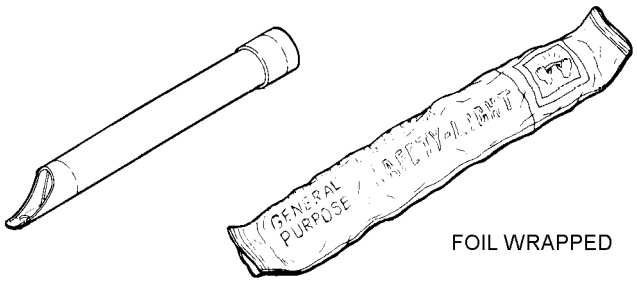

012006

Figure 12-6. Chemical Light

Section 12-6. CYALUME S.O.S. Signal and S.O.S. Light

12-65. DESCRIPTION.

12-66. Cyalume S.O.S. Lights (figure 12-7) consist of chemicals encased in plastic wands, which when activated produce high intensity light. Each wand is housed in a self-contained durable plastic casing. The Cyalume S.O.S. Signal Light (P/N 95277-81, NIIN 01-334-6826) and Cyalume S.O.S. Light (P/N 95277-80, NIIN 01-334-4274) are manufactured by American Cyanamid Company (CAGE 83289).

12-67. CONFIGURATION.

12-68. Cyalume Lights are available in two configurations; an S.O.S. Signal which emits a high intensity orange light for a duration of 5 minutes and an S.O.S. Light with a duration of 8 hours which emits a high intensity green light. Each light consists of a plastic tube, or wand, which encases two chemicals, one of which is in a thin glass vial. Each light tube is housed in a 5 1/2 x 3/4 inch durable protective casing which protects the chemical light and prolongs shelf life. The lights are activated by flexing the plastic tube to break the glass vial and shaking the tube to mix the chemicals which then emit a high intensity light. Replacing an activated light back into its protective casing and closing the cap will prevent almost all light from escaping. A lanyard is provided which is tied to the cap of the chemical light casing and the end of the lightstick. An attached lanyard enables user to swing the light for signaling.

12-69. The 5-minute chemical light is labeled, CYALUME S.O.S. SIGNAL, on the outer casing and has an orange seal wrapped around the upper portion of the casing and casing cap. A raised circular dot just below the orange seal aids identification in the dark. The 8-hour chemical light is labeled, CYALUME S.O.S. LIGHT, on the outer casing and has a green seal wrapped around the upper portion of the casing and casing cap. A raised triangle just below the green seal aids identification in the dark. The seal wrapped around each case shall be labeled to indicate the date of manufacture and expiration date of the enclosed chemical light.

NOTE

The Cyalume S.O.S. lights shall replace 5-Minute Chemical Light, NIIN 01-247-0363, and 12-Hour Chemical Light, NIIN 01-074-4229, through attrition.

12-70. APPLICATION.

NOTE

The Cyalume S.O.S. lights shall not be used with Search and Rescue Swimmer's Harness (P/N 205 NAVAIR 3477AS100) or Rescue Swimmer's Mask MPU-4/P. Inspect harnesses, and if they have been configured to use Cyalume S.O.S. lights, remove and reconfigure with two 4-inch chemlight, (P/N 95270-16, NIIN 00-106-7478) and two 6-inch Chemlight (P/N 95270-52, NIIN 01-074-4229).

12-71. The Cyalume S.O.S. Chemical Lights are intended for the use of downed aircrewmembers as an aid to search and rescue operations.

12-72. MAINTENANCE.

12-73. Maintenance of the Cyalume Chemical Lights is limited to Visual Inspection.

12-74. VISUAL INSPECTION. The Cyalume Chemical Lights shall be inspected when placed in service and every 90 days thereafter. To inspect, proceed as follows:

1. Inspect condition of seal around chemical light plastic casing. If damaged or open, replace seal.

2. Check expiration date on casing seal. Cyalume SOS Chemical Lights cannot expire during a repack cycle. Replace when required.

3. Inspect lanyard for cuts, fraying or other damage. If damaged, replace lanyard with olive drab Type III nylon cord (MIL-C-5040).

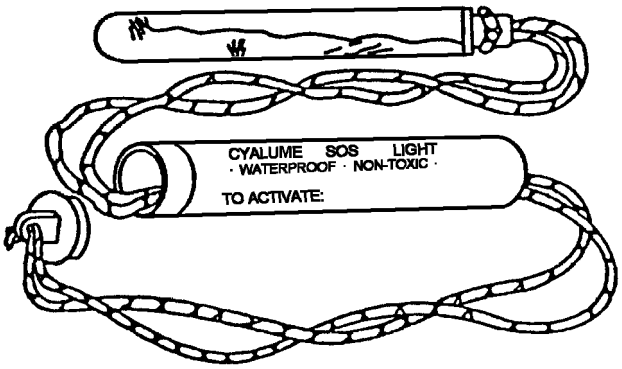

012007

Figure 12-7. Cyalume S.O.S. Chemical Lights

Section 12-7. Cyalume Personnel Marker Light (PML)

12-75. DESCRIPTION.

12-76. The Cyalume Personnel Marker Light (PML) consists of chemicals encased in plastic wand that produces a high intensity light. The Cyalume PML (P/N 9-27058, NIIN 01-086-8077) is manufactured by Omniglow Corporation. Refer to NAVAIR 13-1-6.7-1 for authorized configuration applications.

12-77. CONFIGURATION.

12-78. The Cyalume PML emits a high intensity green light that has a duration of 8 hours. The Cyalume PML is self-contained, water proof, and is 5 inches in length. The plastic wand has an attached handle and is protected by a plastic cover. A retention clip is used for attachment to the pouch type life preserver. Squeezing the handle, which breaks the internal glass vial in plastic wand, activates the light. Shaking the wand mixes the chemicals that produce the high intensity light. Once the light is activated, the protective cover should be discarded.

12-79. APPLICATION.

12-80. The Personnel Marker Light is for use with the pouch type life preserver. It is intended for use by troop passengers of Marine Corps helicopters to aid in search and rescue operations.

12-81. MAINTENANCE.

12-82. Maintenance is limited to a Visual Inspection.

12-83. VISUAL INSPECTION. The Personnel Marker Light shall be visually inspected when placed in service, and every 90 days thereafter or to coincide with the inspection schedule of the equipment in which it is installed. To inspect the Personnel Marker Light proceed as follows:

1. Inspect for damage and cracks in plastic handle and casing.

2. Inspect for presence of clip.

3. Inspect condition of seal around chemical light plastic casing. If damaged or opened, inspect plastic wand for activation. If not activated, replace seal.

4. Check expiration date on seal. Cyalume Personnel Marker (PML) cannot expire during a repack cycle. Replace when required.

5. Replace Personnel Marker Light as required.

Section 12-8. Regular Standard, Right Angle, 2-Cell Flashlight

12-84. DESCRIPTION.

12-85. The Regular Standard, Right Angle, 2-Cell Flashlight (figure 12-8) is a battery-operated flashlight which emits white, red, and diffused light and is intended for general use.

NOTE

For night vision goggle compatibility, the flashlight may be used with a green indicator light filter (NIIN 01-369-1658).

12-86. CONFIGURATION.

12-87. The Regular Standard, Right Angle, 2-Cell Flashlight (MX-991/U, NIIN 00-264-8261) consists of a filter cap; clear lens; reflector; lamp holder; belt clip; battery case; switch; rear spring contact; battery retainer (end cap); spare lamp holder with lamp; lens storage area in end cap which contains diffused (1), blackout (1), red filters (2), and blue filter (1); and a suspension ring located on the bottom of the end cap. The flashlight is powered by two Type BA-30 (commercial, Size D dry cells) conforming to MIL-B-18.

NOTE

Use of alkaline batteries (NIIN 00-835-7210) is preferred. Carbon-zinc batteries may be used only when alkaline batteries are unavailable.

12-88. APPLICATION.

12-89. The Regular Standard, Right Angle, 2-Cell Flashlight is intended for general use. The flashlight is operated by a push slide type switch mounted on the side of the flashlight case. The switch provides a locked OFF, FLASHING, and positive ON position and can be operated with one hand. The filters can be changed (depending on the application) by means of unscrewing the filter cap, installing the filter in front of the lens, then screwing the filter cap back onto the front of the flashlight. If the lamp requires changing, a spare is located in a holder located in the battery retainer.

12-90. MAINTENANCE.

12-91. Maintenance of the Regular Standard, Right Angle, 2-Cell Flashlight is limited to inspection.

12-92. INSPECTION. To inspect the Regular Standard, Right Angle, 2-Cell Flashlight, proceed as follows:

1. Ensure that flashlight operates properly.
2. Inspect lamp and replace if necessary.
3. Inspect filters for cracks, etc.
4. Inspect belt clip.
5. Inspect suspension ring for attachment.
6. Inspect for corrosion.

NOTE

The standard issue flashlight is shown. To reduce FOD potential, carry only filters required. The suspension ring may be also removed.

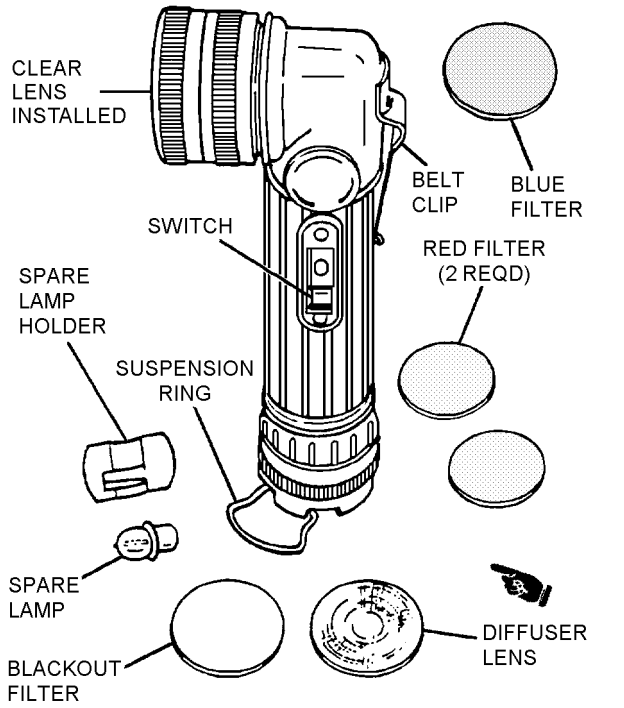

Figure 12-8. Regular Standard, Right Angle, 2-Cell Flashlight

Section 12-9. ACR/FA-11 and ACR/FA-11(M) Crew Light

12-93. DESCRIPTION.

12-94. The ACR/FA-11 and ACR/FA-11(M) are compact, water resistant, battery operated flashlights which emit white or red diffused light and are intended for utility or emergency use. Differences are in color, FA-11 orange and FA-11(M) olive green, and a short lanyard attached to the top of the FA-11. Both units are listed under NIIN 01-035-6077.

12-95. CONFIGURATION.

12-96. The ACR/FA-11 and ACR/FA-11(M) crew lights consist of a lamp lens; red sliding filter; switch; battery case; bottom cover (battery retainer); lanyard (ACR/FA-11 only); velcro backed belt clip; and a lamp extraction/installation tool which is discretionary with Type Commanders. The crew light is powered by two standard size AA (1.5V) batteries (figure 12-9).

NOTE

Use of alkaline batteries (NIIN 00-985-7845) is preferred. Carbon-zinc batteries may be used only when alkaline batteries are unavailable.

12-97. APPLICATION.

12-98. The ACR/FA-11 and ACR/FA-11(M) crew lights are intended for utility or emergency use. The lights are operated by a positive action lever ON/OFF switch located on the top of the units and can be operated with one hand. A built-in red filter slides over the lamp for night vision application. The stainless steel pocket/belt clip has velcro backing and the light is self-standing. The bottom cover is designed to serve as a spanner wrench for lens removal. All ports and openings are sealed with O-rings for water resistance.

12-99. MAINTENANCE.

12-100. Maintenance of the ACR/FA-11 and ACR/FA-11(M) crew lights is limited to inspection.

12-101. INSPECTION. To inspect the ACR/FA-11 and ACR/FA-11(M) crew light, proceed as follows:

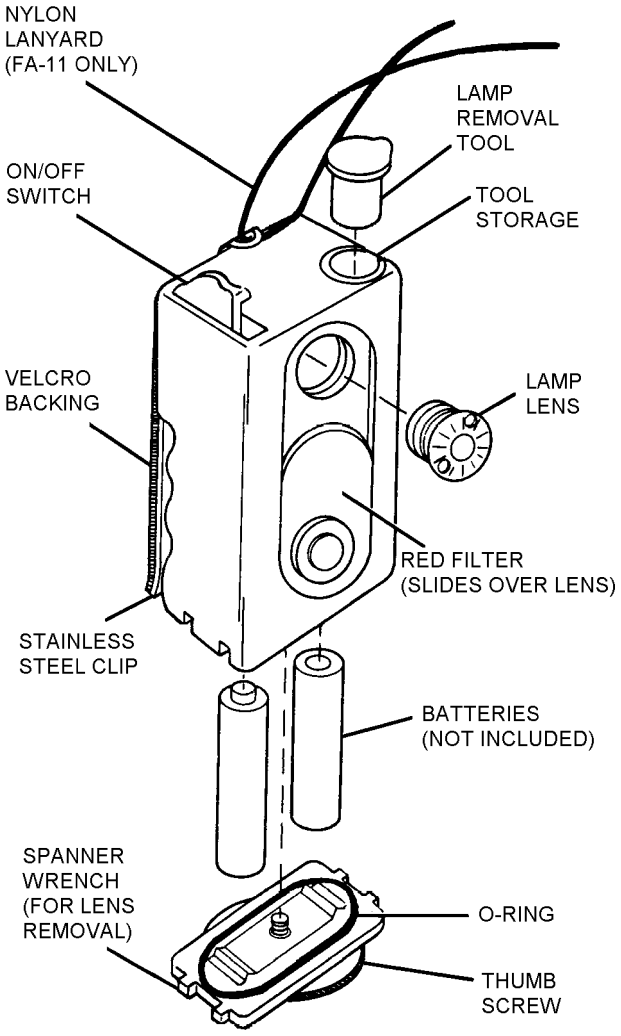

Figure 12-9. ACR/FA-11 and ACR/FA-11(M) Crew Light

NOTE

Lamp removal tool is a FOD hazard, remove during place-in-service inspection.

1. Ensure that light operates properly.

2. Inspect lamp lens and replace if necessary (GE Type 243 or equivalent).

3. Inspect red filter for cracks and freedom of movement.

4. Inspect pocket/belt clip and velcro backing.

5. Inspect for corrosion.

6. Inspect bottom cover for cracks.

CHAPTER 13

RADIOS

Section 13-1. AN/URT-33A Radio Beacon Set

13-1. DESCRIPTION.

13-2. The AN/URT-33A Radio Beacon Set is an emergency radio beacon transmitter which, when activated, transmits a tone-modulated radio frequency signal from the downed aircrewmember to the rescue party.

NOTE

FST for AN/URT-33A Radio Beacon is NAVAIRWARCENACDIV DET, Indianapolis, IN 46219.

13-3. CONFIGURATION.

13-4. The AN/URT-33A is battery-powered and watertight and contains a flexible antenna and telescoping antenna. The set can be automatically activated by the automatic deployment device, or manually activated by means of the ON-OFF switch. The AN/URT-33A uses a backplate which allows battery replacement to be accomplished externally (figure 13-1).

13-5. APPLICATION.

13-6. The AN/URT-33A helps rescue personnel locate a downed aircrewmember during rescue operations over land or water. The AN/URT-33A can be automatically activated by various means.

13-7. MAINTENANCE.

13-8. Maintenance of the AN/URT-33A consists of inspection and other maintenance actions. For all maintenance procedures, refer to NAVAIR 16-30URT33-1.

13-9. INSPECTION. Inspection of the AN/URT-33A shall be performed at the same time as the equipment in which it is installed, however, inspection cycle may not exceed the maximum period specified in NAVAIR 16-30URT33-1.

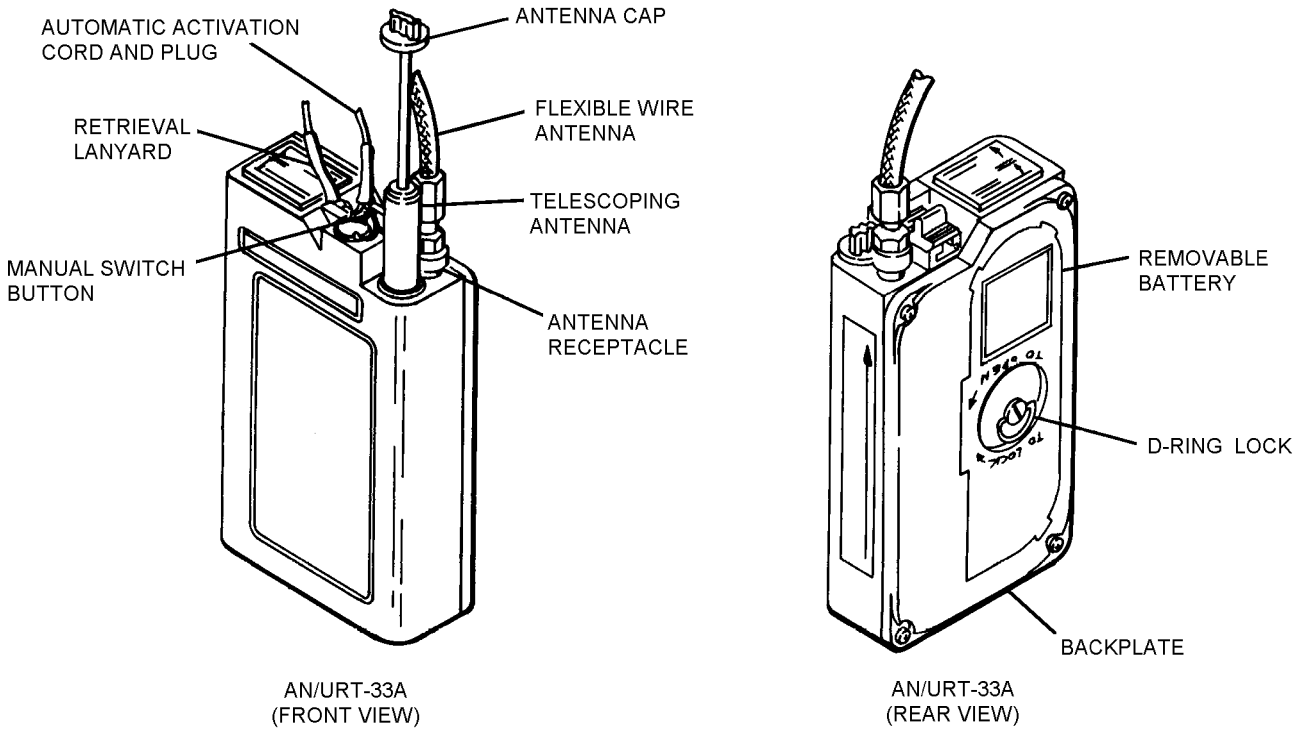

Figure 13-1. AN/URT-33A Radio Beacon Set

Section 13-2. AN/PRC-90 Radio Set

13-10. DESCRIPTION.

13-11. The AN/PRC-90 Radio Set is a dual-channel personal emergency rescue transceiver, used principally for two-way voice or MCW (modulated continuous wave) communication between a downed aircrewmember and a rescue aircraft. Provisions are included for transmitting tone (MCW) and swept-frequency homing beacon signals to guide rescue efforts.

NOTE

FST for AN/PRC-90 Series Radio Set is NAVAIRWARCENACDIV DET, Indianapolis, IN 46219.

13-12. CONFIGURATION.

13-13. The AN/PRC-90 is battery-powered and contains a flexible antenna, an interchangeable telescopic antenna, a function switch (knob and indicator), an MCW button for Morse code, a volume control dial, and an earphone (figure 13-2).

13-14. APPLICATION.

13-15. The AN/PRC-90 is intended to provide a means of signal and voice communication between a downed aircrewmember and the rescue party in the event of an emergency.

13-16. MAINTENANCE.

13-17. Maintenance of the AN/PRC-90 Radio Set consists of inspection and other maintenance actions. For all maintenance procedures, refer to NAVAIR 16-30PRC90-2.

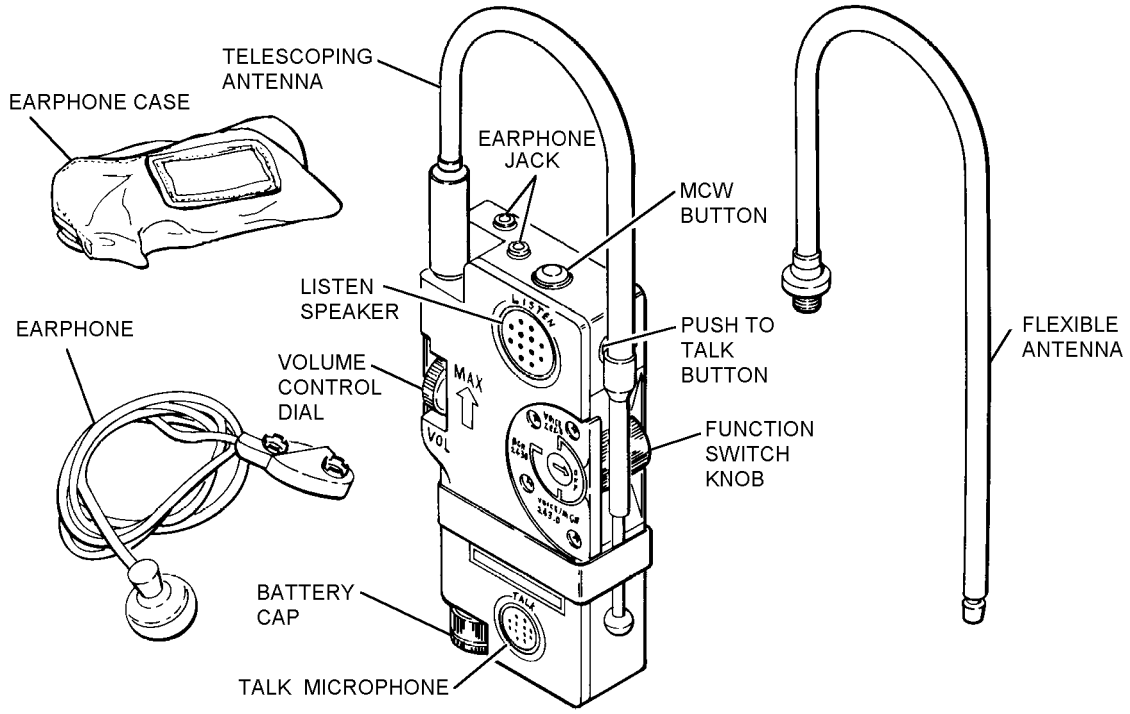

013002

Figure 13-2. AN/PRC-90 Radio Set

Section 13-3. AN/PRC-112, AN/PRC-112C, AN/PRC-112B, AN/PRC-112B1, and AN/PRC-112G Survival Radios

13-18. DESCRIPTION.

13-19. The AN/PRC-112, AN/PRC-112C, AN/PRC-112B, AN/PRC-112B1 and AN/PRC-112G Survival Radio is a personal emergency rescue transceiver, used principally for communications between a downed aircrewmember and a rescue aircraft. The radio has three functions: Transponder Mode, which detects the interrogated ID code, Emergency Beacon Mode, which transmits an emergency beacon compatible with conventional UHF Automatic Direction Finding (ADF) equipment and the AN/ARS-6(V) and Voice Communication Mode, which provides for two-way voice transmission over Line-of-Sight paths.

13-20. The AN/PRC-112B, AN/PRC-112B1 and AN/PRC-112G are combat survival radios. The primary purpose is reporting a survivor's position and status in a Combat Search and Rescue (CSAR) environment. It can be used for two-way communications, transmit a locator beacon signal and transmit its position to a remote interrogator for use in SAR operations. It also includes extensive Global Positioning System (GPS) capabilities.

NOTE

FST for AN/PRC-112, AN/PRC-112C, AN/PRC-112B, AN/PRC-112B1 and AN/PRC-112G is NAVAIRWARCENACDIV DET, Indianapolis, IN 46219.

13-21. CONFIGURATION.

13-22. The AN/PRC-112, AN/PRC-112C, AN/PRC-112B, AN/PRC-112B1 and AN/PRC-112G are battery-powered and contain a flexible antenna, a function switch (knob and indicator), a volume control dial, and an earphone. A Display Cover may be used with AN/PRC-112B, AN/PRC-112B1 and AN/PRC-112G radios (figure 13-3).

13-23. APPLICATION.

13-24. The AN/PRC-112, AN/PRC-112C, AN/PRC-112B, AN/PRC-112B1 and AN/PRC-112G are intended to provide a means of signal and voice communication between a downed aircrewmember and the rescue party in the event of an emergency.

13-25. MAINTENANCE.

13-26. For operation, maintenance and inspection of the AN/PRC-112 and AN/PRC-112C, refer to NAVAIR 16-35PRC112-1. For operation, maintenance and inspection of the AN/PRC-112B, AN/PRC-112B1, and AN/PRC-112G, refer to NAVAIR 16-35PRC112-1-1.

13-27. INSPECTION. Inspection of the Survival Radios shall be performed in accordance with the applicable manual for the radio, refer to paragraph 13-26.

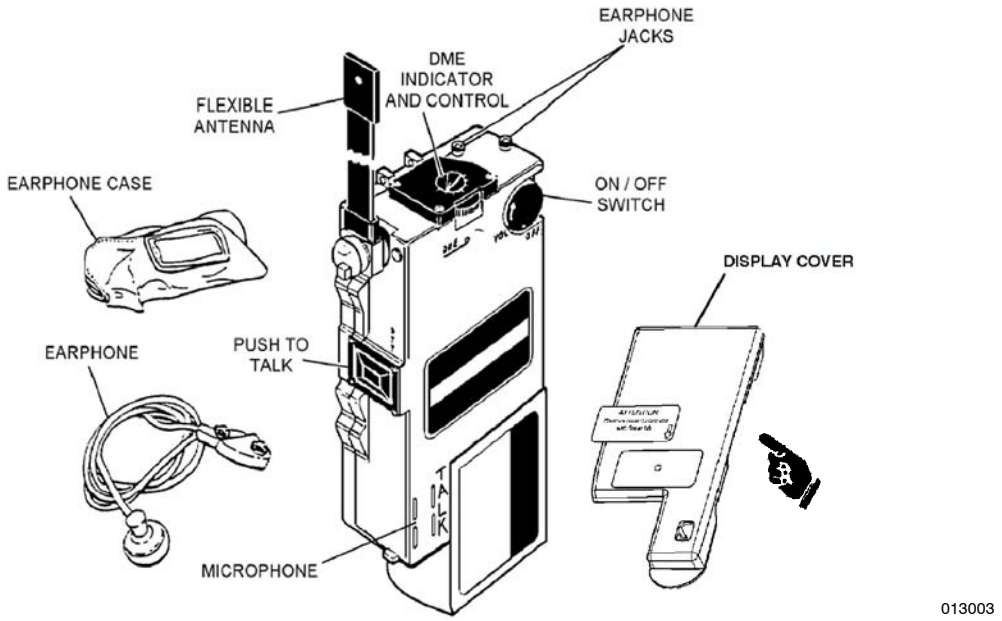

Figure 13-3. AN/PRC-112, AN/PRC-112C, AN/PRC-112B, AN/PRC-112B1 and AN/PRC-112G Survival Radios

Section 13-4. AN/CRT-3 and AN/CRT-3A Radio Sets

13-28. DESCRIPTION.

13-29. The AN/CRT-3 and AN/CRT-3A Radio Sets are emergency transmitting systems which enable downed aircrewmembers to send an automatic distress signal or, by using a manual key, to send coded signals to rescue parties.

13-30. CONFIGURATION.

13-31. The AN/CRT-3 and AN/CRT-3A Radio Sets are identical in all respects except for the transmitter. The AN/CRT-3A, which is discussed in this section, has a higher frequency range than the AN/CRT-3.

13-32. The AN/CRT-3A consists of a hand-generated, self-contained power supply and a keying assembly. Also included are: a three-position selector switch, pushbutton telegraph key, signal lamp and jack, antenna assembly, hand crank (for the generator), wrench, indicator windows (to indicate generated speed and radio signal transmittal), balloon and kite (to raise antenna assembly wire), and a hydrogen generator (to inflate balloon). All these items are packed into a brilliant orange-yellow equipment container which will float if dropped into water (figure 13-4).

13-33. APPLICATION.

13-34. The AN/CRT-3A is carried in an aircraft and is dropped by parachute to downed aircrewmembers. The set can transmit signals in two different frequencies to be received by long-range and short-range rescue stations.

13-35. MAINTENANCE.

13-36. Maintenance of the AN/CRT-3A shall consist of inspection and other maintenance actions. For maintenance procedures, refer to NAVAIR 16-30CRT3-2.

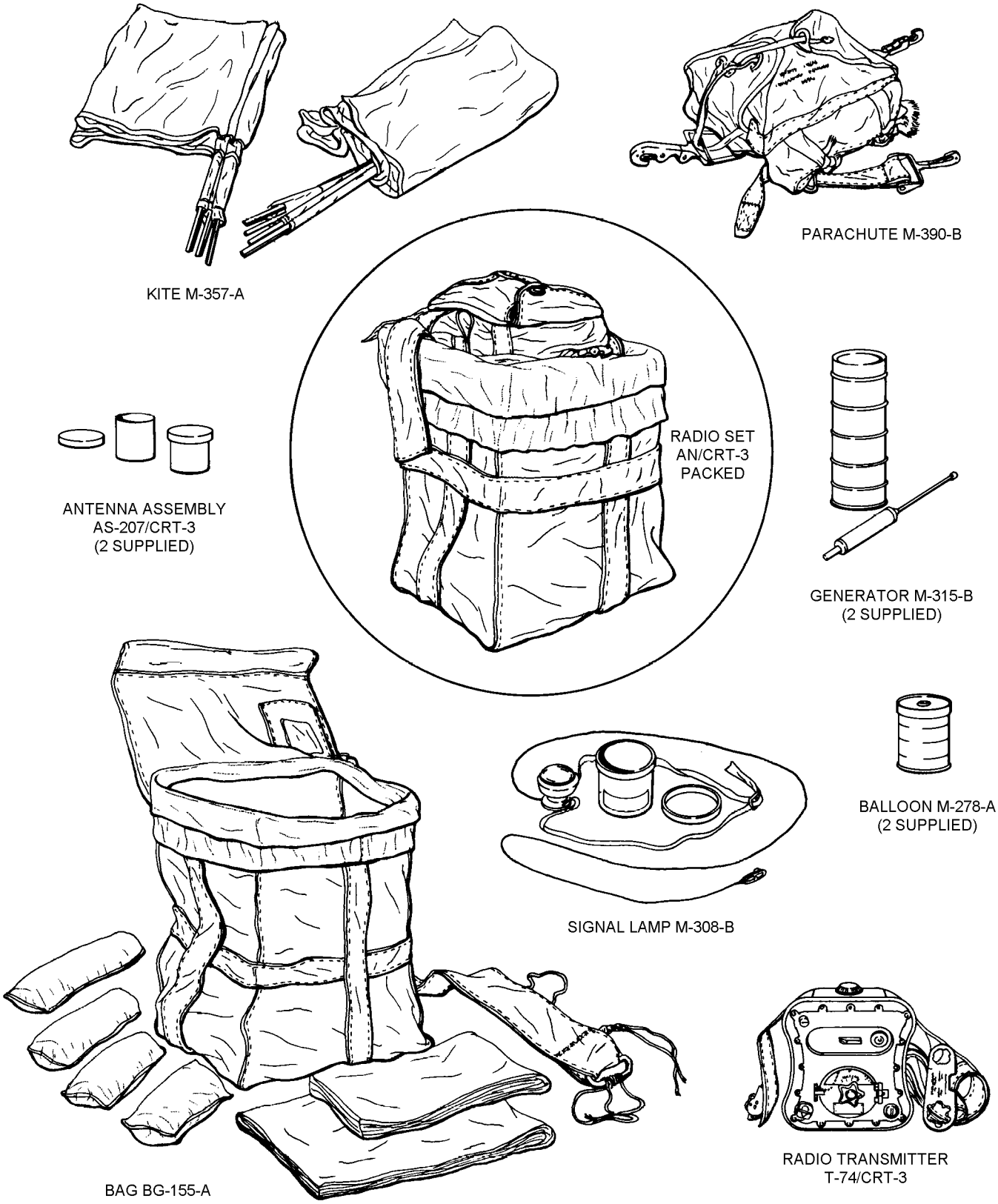

Figure 13-4. AN/CRT-3 Radio Set

Section 13-5. AN/PRT-5 Radio Transmitting Set

13-37. DESCRIPTION.

13-38. The AN/PRT-5 Radio Transmitting Set is an emergency transmitter which transmits a tone-modulated radio frequency signal in both high frequency (HF) and ultra high frequency (UHF) ranges. The set has an inflatable float assembly which allows it to float at sea or sit upright on land. The battery pack is designed to provide 72-hour continuous operation at 25°C (77°F). No provisions have been made for voice or code communications or for receiving signals from search aircraft.

NOTE

FST for AN/PRT-5 Radio Transmitting Set is NAVAIRWARCENACDIV DET, Indianapolis, IN 46219.

13-39. CONFIGURATION.

13-40. The AN/PRT-5 is battery-powered and contains a UHF antenna, an HF telescopic antenna, a power switch, and a float assembly which is inflated by a CO_2 cartridge or mouth valve. The top part of the transmitting set is the electronic housing assembly and the lower part is the battery case. The entire assembly is packed into a carrying case to be stored in a liferaft (figure 13-5).

13-41. APPLICATION.

13-42. The AN/PRT-5 is intended to signal the location of downed aircrewmembers to search aircraft, surface vessels, or coastal-based DF stations.

13-43. MAINTENANCE.

13-44. Maintenance of the AN/PRT-5 consists of inspection and other maintenance actions. For all maintenance, refer to NAVAIR 16-30PRT5-1.

13-45. INSPECTION. Inspection of the AN/PRT-5 shall be performed concurrent with the equipment in which it is installed.

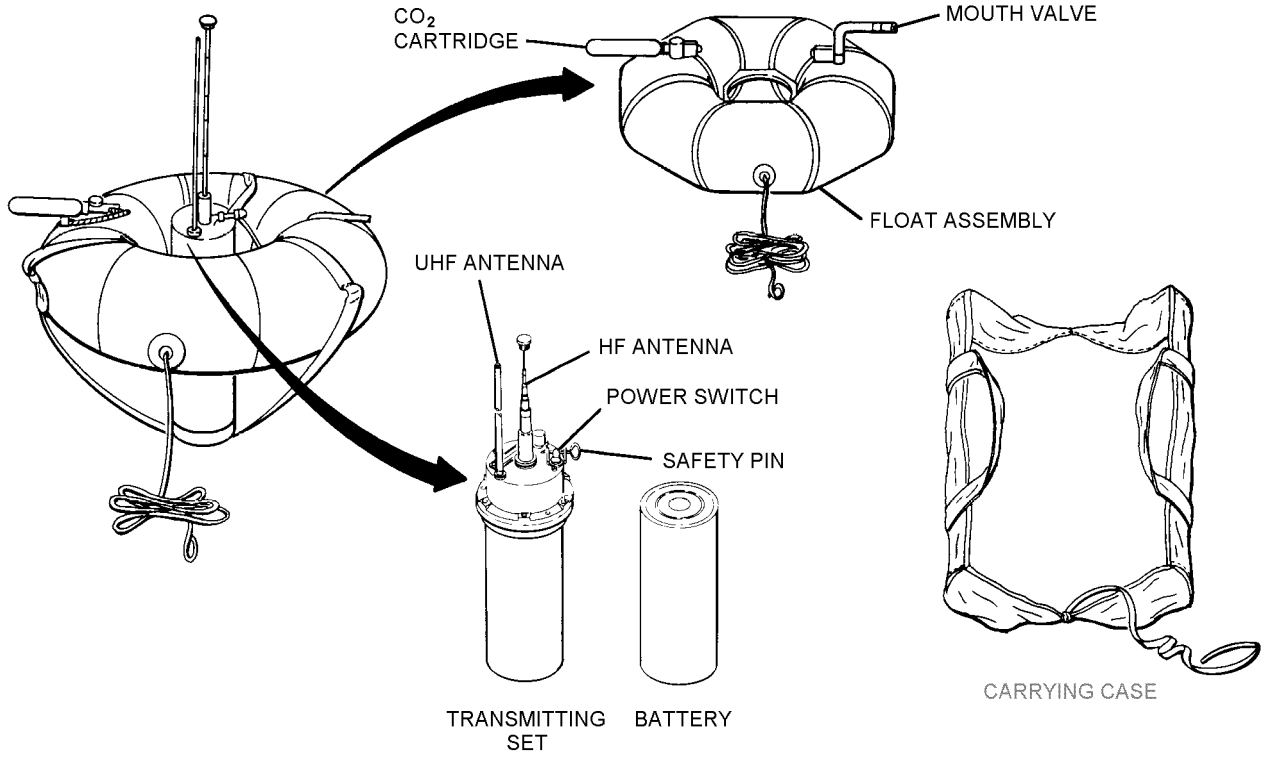

Figure 13-5. AN/PRT-5 Radio Transmitting Set

Section 13-6. AN/PRC-149, AN/PRC-149A Radio Set and C-12631/PRC-149 Radio Control Unit

13-46. DESCRIPTION.

13-47. The AN/PRC-149 and AN/PRC-149A Radio Sets (figure 13-6) are personal non-combat emergency communication radio and emergency location beacon transmitters. The Radio Set operates in voice transceiver mode on three manually selectable, emergency frequencies. A triple frequency beacon-operating mode provides transmissions on all three internationally recognized search and rescue frequencies.

13-48. The C-12631/PRC-149 (figure 13-7) Radio Control Unit (voice box w/cable) connects to the AN/PRC-149 or AN/PRC-149A to make it a SAR swimmer's radio. When attached, the control unit assumes control of the Push-To-Talk (PTT) and the UP and DOWN volume control functions. Connecting the SAR swimmer's radio control unit disables the corresponding functions in the AN/PRC-149 or AN/PRC-149A.

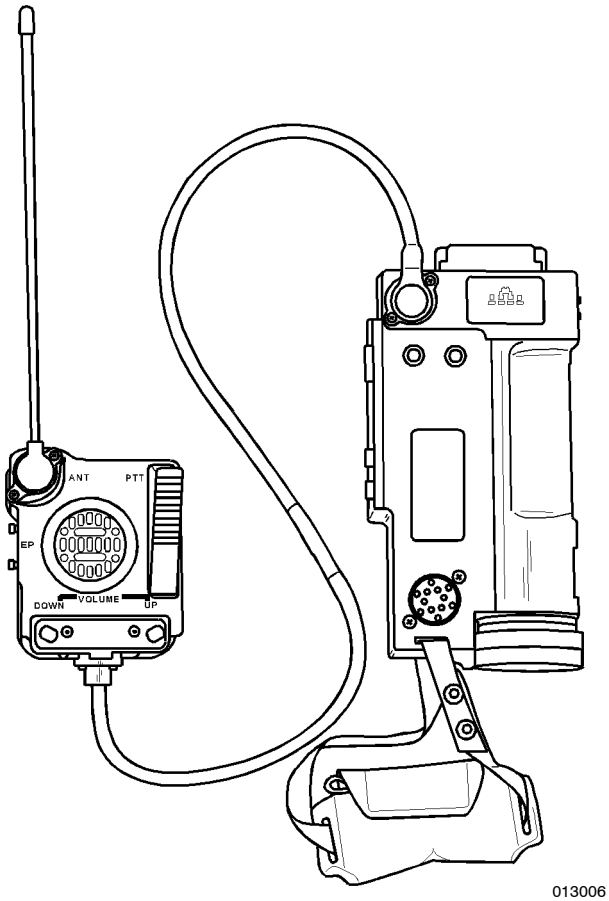

Figure 13-6. AN/PRC-149 and AN/PRC-149A Radio Sets

13-49. CONFIGURATION.

13-50. The AN/PRC-149 and AN/PRC-149A are battery-powered and contains a flexible VHF/UHF antenna, GPS antenna, LED display, ON/OFF Switch, volume control switch, PTT switch, Electret microphone, speaker, and earphones.

13-51. APPLICATION.

13-52. The AN/PRC-149 and AN/PRC-149A are intended to provide a means of signal and voice communication between a downed aircrewmember and the rescue party in the event of an emergency.

13-53. The C-12631/PRC-149 Radio Control Unit provides a means of signal and voice communications between the SAR swimmer and the SAR aircraft.

13-54. MAINTENANCE.

13-55. Maintenance of the AN/PRC-149, AN/PRC-149A and C-12631/PRC-149 Radio Control Unit consists of Place-In-Service, Preflight, Postflight and Special Inspections. Maintenance shall be performed at the Organizational level or above. For all maintenance procedures, refer to NAVAIR 16-30PRC149-1.

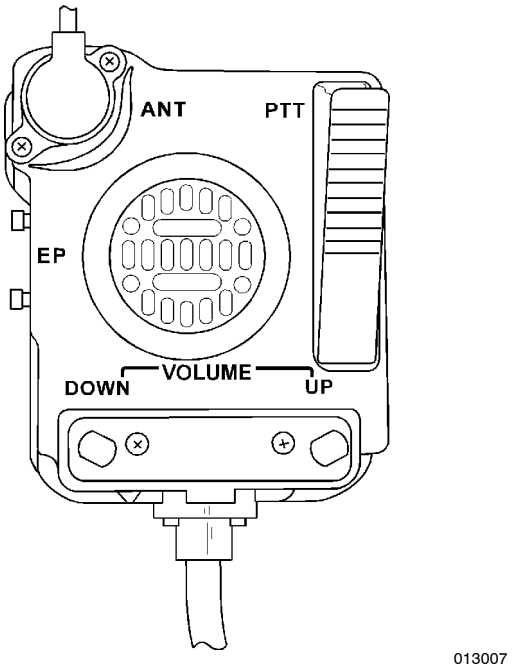

Figure 13-7. C-12631/PRC-149 Radio Control Unit

Section 13-7. AN/URT-140 Radio Beacon Set

13-56. DESCRIPTION.

13-57. The AN/URT-140 Radio Beacon Set (figure 13-8) is an emergency radio beacon transmitter which, when activated, transmits distress information for detection by Search and Rescue forces at three internationally recognized SAR frequencies.

13-58. CONFIGURATION.

13-59. The AN/URT-140 is battery powered and watertight. It contains a flexible antenna, mode control switch, magnetic actuator plug, and mechanical actuator assembly. The set can be automatically activated by the mechanical actuator assembly or manually activated by means of the mode control switch.

13-60. APPLICATION.

13-61. The AN/URT-140 transmits distress information to assist rescue personnel in locating a downed aircrewmember during rescue operations over land or water.

13-62. MAINTENANCE.

13-63. Maintenance of the AN/URT-140 consists of Place-In-Service, Preflight, Postflight and Special Inspections. Maintenance shall be performed at the Organizational level or above. For all maintenance procedures, refer to NAVAIR 16-30URT140-1.

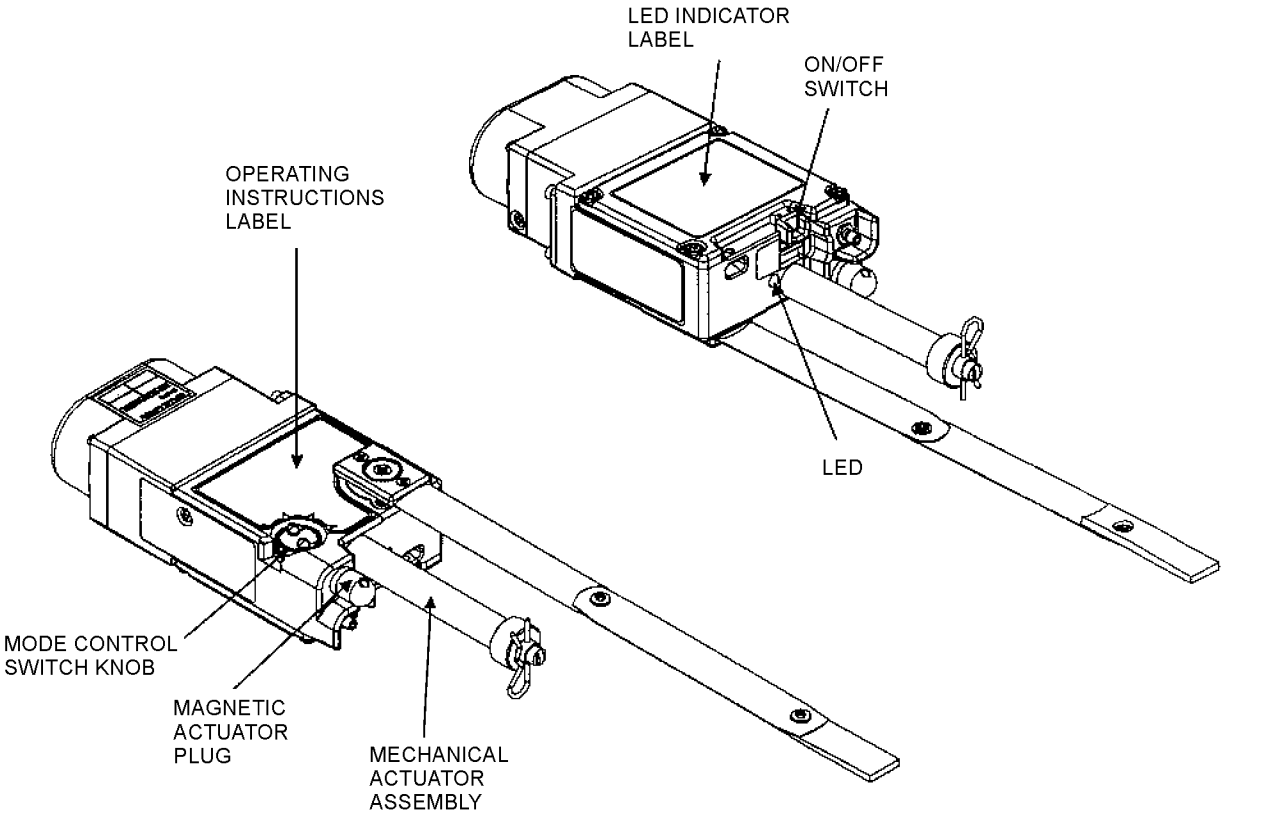

013008

Figure 13-8. AN/URT-140 Radio Beacon Set

Section 13-8. AN/PRQ-7 Combat Survivor/Evader Locator Radio Set

13-64. DESCRIPTION.

13-65. The AN/PRQ-7 radio provides secure data communication, geopositioning, voice and beacon capability for a downed aircrewmember to communicate with rescue forces in a combat environment. The radio provides three modes of operation for digital messaging transmission: UHF Satcom, Low Probability of Exploitation (LPE), and Cospas-Sarsat.

13-66. UHF Satcom is a two-way, DoD controlled, geosynchronous satellite communications system providing worldwide coverage between 70° north latitude and 70° south latitude. The CSEL System uses this constellation of satellites to provide the primary means of communications with a radio. The CSEL System message architecture divides each hour into two 30-minute periods, each with 225 8-second timeslots or frames synchronized to Universal Time Coordinated (UTC). These frames are used to schedule radio users into the CSEL network. Radio users are scheduled in the network by sending a UHF Satcom transmission.

13-67. The system provides LPE of radio signals by hostile forces using a number of transmission techniques to significantly reduce user vulnerability to detection and intercept. When LPE is available, a rescue center can send a message that sets a bit in the radio to automatically place the radio in a LPE only transmit mode (UHF Satcom is still required to receive Joint Survival Rescue Center (JSRC) messages).

13-68. Cospas-Sarsat is a one-way dedicated SAR system operated by the US, Russia, France, and Canada providing global coverage, including polar areas. The Cospas-Sarsat system uses satellites to detect and locate emergency beacons carried by ships, aircraft, or individuals. When an emergency beacon is activated, the signal is received by a satellite and relayed to the nearest available ground station. The radio provides the Cospas-Sarsat beacon capability operating at 406 MHz.

13-69. Line-of-Sight (LOS) non-secure amplitude modulated (AM) voice and beacon communications are also provided.

13-70. The radio GPS receiver obtains geopositioning information that is included in every data transmission. Data transmission is received at the base station and transmittted to theater command centers and search and rescue coordination centers via existing DoD digital message circuits.

13-71. A unique, non-changeable radio identification number set at the factory identifies each radio. Transmisisons are automatically tagged wtih this identification number and encrypted using traffic encryption keys unique to each radio. This allows each radio to be individually tracked at the JSRC and messages sent to a specific radio. A CSEL Group Identification code (CGI) is also loaded and transmitted along with the message. The CGI, along with a callsign, enables the rescue center operator to contact the Survivor/Evader's (S/E) home unit to collect Isolated Personnel Report (ISOPREP) and other vital background information.

13-72. Retention of frequencies, waypoints, crypto keys and messages is maintained in volatile memory using power from the main battery pack.

13-73. CONFIGURATION.

13-74. The radio set consists of the radio with main battery, an earphone and a strap and pouch attached to the rear of the radio, (See figure 13-9). The radio is powered by a main battery which, when new and under nominal operating conditions, provides a maximum of 6 days (intermittent transmission) operation. The radio may be powered from a non-rechargeable Lithium/Manganese battery or a rechargeable Lithium Ion battery. Battery life is driven by the starting condition of the battery, the ambient operating temperature, the operating mode and extent of usage. The non-chargeable battery has an internal fuel gauge (% capacity remaining) that provides an indication of remaining battery life and alerts the user when battery energy is getting low. Non-rechargeable battery indications are displayed on the radio. The rechargeable battery has a state-of-charge (SOC) indicator on the face of the battery. Status is indicated on a five-segment Liquid Crystal Display (LCD) bar graph readout. Each bar represents 20% of charge.

13-75. APPLICATION.

13-76. The AN/PRQ-7 PRC-112B1 is intended to provide a means of digital, signal and voice communication between a downed aircrewmember and the rescue personnel in the event of an emergency.

13-77. MAINTENANCE.

13-78. For operation, maintenance and inspection of the AN/PRQ-7, refer to NAVAIR 16-30PRQ7-1.

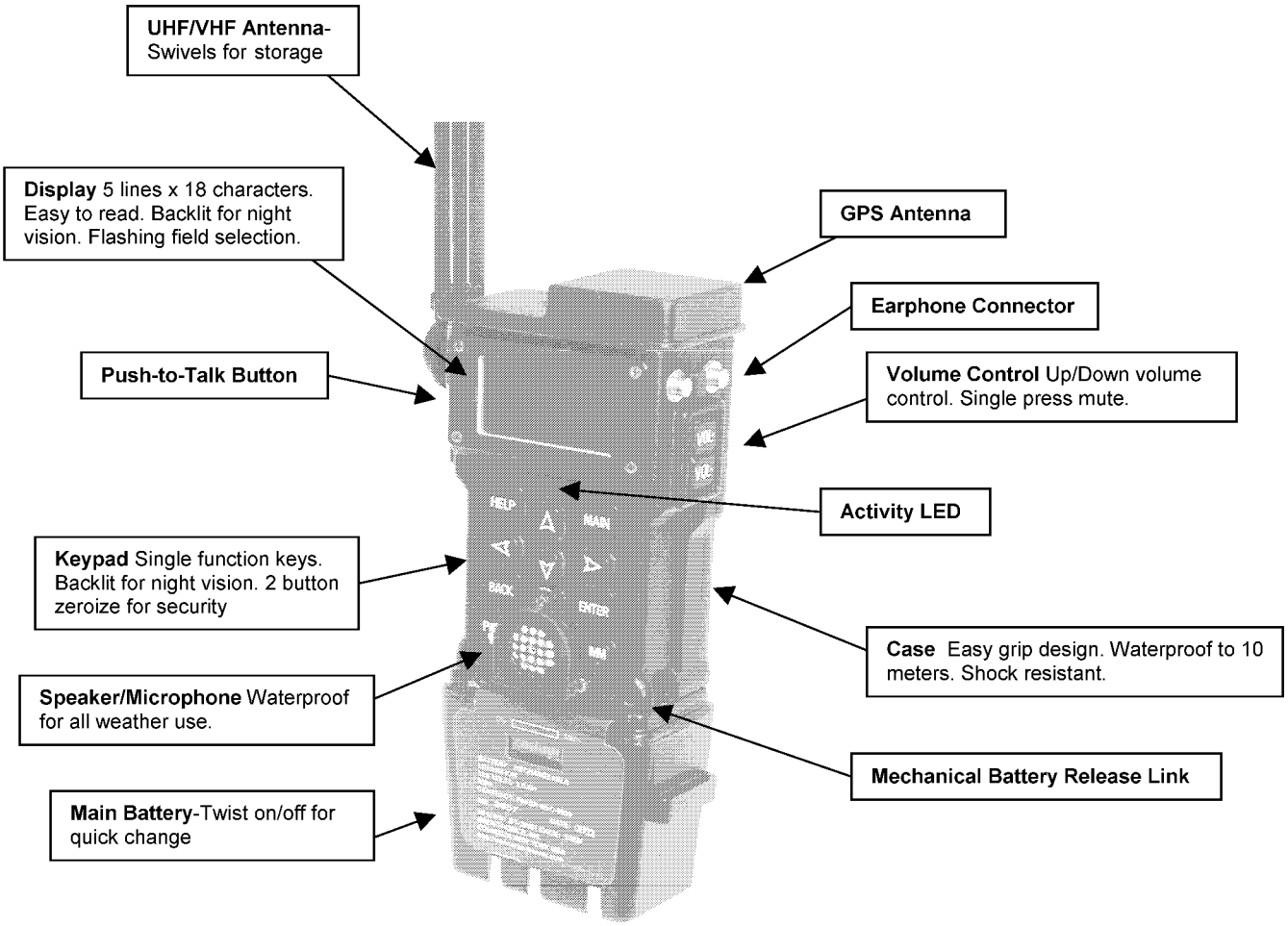

Figure 13-9. AN/PRQ-7 Combat Survivor/Evader Locator Radio Set

CHAPTER 14

SEARCH AND RESCUE (SAR) EQUIPMENT

Section 14-1. Introduction

14-1. GENERAL.

14-2. Proper maintenance of Search and Rescue equipment is imperative to prevent malfunction, damage and corrosion. This chapter addresses a brief description and the inspection and maintenance of SAR equipment.

NOTE

If there is any doubt about the serviceability of a piece of SAR equipment, remove it from service and destroy it before discarding it or turning it in to supply.

Table 14-1 identifies the Item, Part Number, NSN, Level of Maintenance, Inspection Cycles and Procurement Information for end items and associated parts. Additional information regarding the usage and allowances of SAR equipment can be found in the following publications:

NTTP 3-50.1 (Search and Rescue Manual)
NAVAIR 00-35QH-2 (NAVAIR Allowance List)

14-3. MAINTENANCE.

14-4. Maintenance shall be performed by Organizational, Intermediate or Depot Level as identified by table 14-1. All maintenance actions shall be recorded in accordance with COMNAVAIRFORINST 4790.2.

14-5. SPECIAL INSPECTIONS.

NOTE

Inspection cycles have been updated to standardize the inspection cycles of SAR equipment. Updated inspection cycles shall take effect at the next scheduled inspection cycle.

Search and Rescue equipment that is found defective during the Place-In-Service Inspection shall be reported in accordance with COMNAVAIRFORINST 4790.2.

14-6. All SAR equipment shall be inspected in accordance with the applicable section of this Chapter. Special Inspections shall consist of a Place-In-Service, 90-Day, 180-Day, 365-Day and Load Tests as required. In addition, Pre-flight/Post-flight and Conditional Inspections shall be performed as necessary. Refer to table 14-1 for individual equipment inspection cycles.

14-7. Pre-flight/Post-flight. Pre-flight/Post-flight Inspections shall be performed by the aircrewman on all rescue equipment before and after each flight. Pre-flight and Post-flight Inspections are conducted to ensure rescue equipment, both personal and aircraft, are in proper working condition. Discrepancies found during a Pre-flight/Post-flight Inspections shall be reported immediately to maintenance personnel.

14-8. Conditional Inspection. A Conditional Inspection shall be performed anytime an item of rescue equipment has been excessively hard hit or has had a possible overstress occurrence. Inspection criteria for the item shall conform to the applicable section of this chapter.

1. Load Test. Unless otherwise identified in table 14-1, Load Tests are only required to be performed if an item of rescue equipment has been excessively hard hit, has had a possible overstress occurrence or has had a major component replaced that affected the weight and lifting requirements of the item.

14-9. CLEANING. Salt-water contamination will cause corroding and deterioration of materials and components. All SAR equipment and associated gear that has been exposed to or used in salt water shall be rinsed thoroughly with fresh water and wiped or hung to dry away from direct sunlight. Re-lubricate items as required by the applicable section of this chapter. Perform a Pre-flight Inspection before next usage.

14-10. REPAIR.

14-11. Stitching. All stitching requirements shall be Type 301 lockstitch, 8 to 10 stitches per inch. Backstitch a minimum of 1/2 inch unless otherwise stated. Use same type thread as original stitching.

Table 14-1. SAR Equipment Inspection and Procurement

Item	P/N	NSN	Inspection Cycles							Notes
			PIS	90 Day	180 Day	365 Day	Load Test	Cond. Insp.	O/I/D Level Maint	
Helicopter Rescue Equipment Bag, BGU-8/N	1682AS100-1	1680-01-243-4523	X		X				O	
Helicopter Rescue Equipment Bag, Small	261	4240-01-518-0932	X		X				O	LSC (H-60 use only)
HELICOPTER RESCUE EQUIPMENT BAG CONTENTS										
Cable Grip	MS90382-1	1680-00-511-2711	X		X				O	
MPLR Weak Link	Local P/N	Local mfg	X		X				O	The number of required weak links shall correspond to the number of liferafts installed in the aircraft.
Hoist Quick Splice w/Rescue Hook	Local mfg		X		X		X	X	O	
Hoisting Sling Assembly	190	1670-01-226-5300	X		X			X	O	
Cable Cutter	1490MTN	5110-00-224-7053	X		X				O	Approved Alternate for Pneumatic Hand Tool
Pneumatic Hand Tool	64A83H1-1	4240-00-177-9260	X		X				O/I	
Hoisting Gloves - Size 1 - Size 2 - Size 3 - Size 4 - Size 5	MIL-G-2366	 8415-00-268-7871 8415-00-268-7872 8415-00-268-7869 8415-00-268-7870 8415-00-268-7868	X		X				O	
Blanket	MIL-B-844	7210-00-082-5668	X		X				O	
Chemical Light Strap	230	4220-01-325-3133	X		X				O	
Aircrewmembers Safety Belt	MS16070-21	1680-01-133-9975	X		X				O	For Equipment Bag application only
Chemical Lights - 4-inch green - 6-inch yellow High Intensity - 6-inch IR	 AA55434 AA55132 908019	 6260-00-106-7478 6260-01-074-4230 6260-01-195-9752	X		X				O	
Cranial	HGU-25(V)2/P		X		X				O	Refer to NAVAIR 13-1-6.7-3
LPU-32/P	3335AS101-1	4220-01-440-1573	X		X				O/I	Refer to NAVAIR 13-1-6.1-2
LPP-1/A	68A94D2-1		X		X				O/I	No longer available. Use until no longer serviceable

Table 14-1. SAR Equipment Inspection and Procurement (Cont)

Item	P/N	NSN	Inspection Cycles							Notes
			PIS	90 Day	180 Day	365 Day	Load Test	Cond. Insp.	O/I/D Level Maint	
AIRCRAFT INSTALLED EQUIPMENT										
Rescue Strop	216-1	1680-01-347-4946	X		X			X	O	
Quick Strop	214	Open Purchase	X		X				O	LSC
Cable Weight Cover	60A138H4	1680-00-511-2714	X		X				O	
Trail Line Assembly	220	4010-01-312-4854	X		X				O	
- Trail Line Pack	221	1680-01-226-5135								
- Trail Line Gloves	MIL-G-2366	Multiple NSN's								
or										
Line Handling Gloves	225	Open Purchase								LSC
- Shot Bag	224	1680-01-236-4663 or Open Purchase								LSC
- Rope	220-2	Open Purchase								LSC
- V-strap	220-3	Open Purchase								LSC
70-Foot Trail Line Assembly	220-S	Special Order	X		X				O	LSC and for **training only**.
MEDEVAC Litter	402	6530-01-187-0104	X		X			X	O	
- Stowage Container	402-1	Open Purchase								LSC
- Frame Cover w/Restraint Straps	402-2	Open Purchase								
- Flotation Pad, Front	402-3	Open Purchase								
- Flotation Pad, Back	402-4	Open Purchase								
- Carrying Harness	402-8	Open Purchase								
- Vertical Hoisting Sling	402-7	Open Purchase	X		X			X	O	
Stokes Litter	9-1047	6530-01-315-4784	X		X				O	
Flotation Kit Assembly	101	4220-01-329-6420	X		X				O	
- Log Foam	130	Open Purchase								LSC
- Log Covers	110	Open Purchase								
- Retainer Straps	150	Open Purchase								
- Restraint Straps	140	Open Purchase								
- Chest Pad Foam	103-3	Open Purchase								
- Chest Pad Cover	103-4	Open Purchase								
- Ballast Bar	170	Open Purchase								
Rescue Net	X-872-SF	1670-01-172-3592	X		X				O	
Collapsible Rescue Basket	495	TBD	X		X				O	LSC

Table 14-1. SAR Equipment Inspection and Procurement (Cont)

Item	P/N	NSN	Inspection Cycles							Notes
			PIS	90 Day	180 Day	365 Day	Load Test	Cond. Insp.	O/I/D Level Maint	
AIRCRAFT INSTALLED EQUIPMENT (Cont)										
Forest Penetrator	K26-1000-9	4240-00-199-7353	X		X				O	
Rescue Seat	420	4240-01-465-2302	X		X			X	O	
Electric Sea Marker Light, (SDU-36/N) - 6 Volt Battery	1702AS100-1 BA803/U	6230-01-262-1812 6135-00-100-0413	X		X				O	Inspection cycle of the electric sea marker light (SDU-36/N) may be increased at discretion of squadron commander. The SDU-36N is no longer being manufactured. The automatic crew-overboard marker light is the replacement as authorized by SARMM. SDU-36N's shall remain in service until no longer serviceable.
Automatic Crew-Overboard Marker Light - 6 Volt Battery	ACR/SM-2 BA803/U	6230-01-143-4778 6135-00-100-0413	X		X				O	The automatic crew-overboard marker light is the replacement for the SDU-36N. The battery shall be replaced annually.
RAPPELLING AND TREE EXTRACTION EQUIPMENT										
Descent Control Device	14G-0	Open Purchase	X		X				O	Descent Control Inc
Rappel Ropes w/bags - 150 ft Rope - Bag - 250 ft Rope - Bag	 L-4-150 15C1 L-4-250 15C2	 Open Purchase Open Purchase Open Purchase Open Purchase	X		X			X	O	Descent Control Inc
Basic Rappel Harness - Small (26-30 inches) - Medium (30-34 inches) - Large (34-38 inches) - X-large (38-42 inches) - XX-large(42-46 inches)	 202512 202513 202514 202515 202516	 1680-01-453-9830 1680-01-453-9806 1680-01-453-9820 1680-01-453-9834 1680-01-453-9839	X		X				O	

Table 14-1. SAR Equipment Inspection and Procurement (Cont)

Item	P/N	NSN	Inspection Cycles							Notes
			PIS	90 Day	180 Day	365 Day	Load Test	Cond. Insp.	O/I/D Level Maint	
RAPPELLING AND TREE EXTRACTION EQUIPMENT (Cont)										
Pro Series Rescue Harness - Small (26-30 inches) - Regular (30-44 inches) - X-Large (42-46 inches)	 202172 202174 202175	 Open Purchase NSN's will be assigned. Until NSN's are assigned, harnesses may be opened purchased.	X		X				O	CMC Rescue. The Pro Series Rescue Harness is the replacement for the Basic Rappel Harness. The Basic Rappel Harness is still authorized for use until no longer serviceable.
Carabiners - Locking (Type II) - Non-locking (Type III)	 A-A-50041 A-A-50041	 8465-01-322-7432 8465-01-322-7433	X		X				O	
Spring Loaded Belay Plate	434507	Open Purchase	X		X				O	Liberty Mountain Sports
540 Belay Device	TBD	TBD								TBD
Dynamic Rope (Kernmantle) 11mm	440230	Open Purchase	X		X			X	O	Liberty Mountain Sports
Static Rope	TBD	TBD								TBD
Tubular Nylon Strap	MIL-W-5625	8305-00-753-6529	X		X				O	Cut to desired lengths
Hoisting Vest	TBD	Open Purchase	X		X				O	TBD
Climber Belt	A-A-1977	4240-00-926-4154	X		X				O	
Climber Strap	A-A-1776	4240-00-725-9715	X		X				O	
Climber Spikes	A-A-1109	4240-00273-9668	X		X				O	
Climbers Helmet - Headlamp	471157 2030 TBD	Open Purchase Open Purchase Open Purchase	X X	 X	X				O O	REI Northwest River Supply
V-Bladed Rescue Knife - Replacement Blade	RN2 RKB-G	5110-00-524-6924 5110-00-098-4326	X		X				O	
Rescue 8	312871	Open Purchase	X		X				O	CMC Rescue
Gloves, Rappelling		Open Purchase	X		X				O	Open purchase gloves must be full fingered.
Sven Folding Saw - Blades	370830 370831	Open Purchase Open Purchase	X X		X X				O	Liberty Mountain Sports
Rescue Pulleys - 2-inch Single - 2-inch Double	 3155000 31550	 Open Purchase Open Purchase	X\		X				O	CMC Rescue
Entrenching Tool	A-A-59337	5120-00-878-5932	X		X				O	

Table 14-1. SAR Equipment Inspection and Procurement (Cont)

Item	P/N	NSN	Inspection Cycles							Notes
			PIS	90 Day	180 Day	365 Day	Load Test	Cond. Insp.	O/I/D Level Maint	
MEDICAL EQUIPMENT										
Level A Medical Kit	MODEL251	6545-01-157-9112	X		X				O	Medical items must be ordered separately, refer to NTTP 3-50.1 for list of required items.
Level B Medical Kit	CN95-0286	6545-01-416-9510	X		X				O	Medical items must be ordered separately, refer to NTTP 3-50.1 for list of required items.
Level C Medical Kit	LBT-1652B	6530-01-452-3226	X		X				O	The Level C Medical Kit for use by the HCS-4 and HCS-5 community only. Medical items must be ordered separately, refer to NTTP 3-50.1 for list of required items.
SAR AIRCREWMAN PERSONAL EQUIPMENT										
WETSUIT ENSEMBLE										
- Divers Suit (Shorty)			X	X					O	
- Men's:	MNP461-GL-S	4220-01-441-2321								
	-M	-2327								
	-ML	-2379								
	-L	-2385								
	-XL	-2471								
	-XXL	-2475								
- Women's:	FMNP461-GL-S	4220-01-441-2490								
	-M	-2502								
	-ML	-2864								
	-L	-2867								
	-XL	-2870								
	-XXL	-2874								

THIS PAGE INTENTIONALLY LEFT BLANK.

Table 14-1. SAR Equipment Inspection and Procurement (Cont)

Item	P/N	NSN	Inspection Cycles							Notes
			PIS	90 Day	180 Day	365 Day	Load Test	Cond. Insp.	O/I/D Level Maint	
SAR AIRCREWMAN PERSONAL EQUIPMENT (Cont)										
- Instructor Shorty			X	X					O	
- Men's:	MNT1462-GL-S	4220-01-441-3852								
	-M	-3855								
	-ML	-3861								
	-L	-3864								
	-XL	-4283								
	-XXL	-4286								
- Women's:	FMNT1462-GL-S	4220-01-441-4291								
	-M	-4302								
	-ML	-4344								
	-L	-4351								
	-XL	-4356								
	-XXL	-4813								
- Jacket			X	X					O	
- Men's:	MNP452-4GL-S	4220-01-441-1272								
	-M	-1359								
	-ML	-1366								
	-L	-1372								
	-XL	-1573								
	-XXL	-1574								
- Women's:	FMNP452-4GL-S	4220-01-441-1757								
	-M	-1768								
	-ML	-1802								
	-L	-1812								
	-XL	-1847								
	-XXL	-1934								
- Trousers (Farmer John)			X	X					O	
- Men's:	MNPFJ442-1GL-S	4220-01-441-3389								
	-M	-3391								
	-ML	-3424								
	-L	-3425								
	-XL	-3488								
	-XXL	-3495								
- Women's:	FMNPFJ442-1GL-S	4220-01-441-3499								
	-M	-3502								
	-ML	-3683								
	-L	-3686								
	-XL	-3688								
	-XXL	-3691								

Table 14-1. SAR Equipment Inspection and Procurement (Cont)

Item	P/N	NSN	Inspection Cycles							Notes
			PIS	90 Day	180 Day	365 Day	Load Test	Cond. Insp.	O/I/D Level Maint	
SAR AIRCREWMAN PERSONAL EQUIPMENT (Cont)										
- Hood			X	X					O	
	MNP601-GL-XS	4220-01-441-2912								Open Purchase information AMRON INTL
	-S	-2920								
	-M	-2925								
	-ML	Open Purchase								
	-L	-2984								
	-XL	-2999								
	-XXL	Open Purchase								
- Gloves			X	X					O	
- (2mm Neoprene Black)	3462AS106-1	4220-01-441-2885								For use in warm water environments
	-2	-3369								
	-3	-2898								
	-4	-3399								
	-5	-3423								
- Gloves (Titanium)			X	X					O	
- (3mm)	33201-1 (XS)	Open Purchase								AMRON INTL (for use in cold water environments)
- (5mm)	-2 (S)									
	-3 (M)									
	-5 (L)									
	-6 (XL)									
	35201-1 (XS)									
	-2 (S)									
	-3 (M)									
	-5 (L)									
	-6 (XL)									
Superzip			X	X					O	
- 3mm (sizes 5-13)	93201	Open Purchase								AMRON INTL
- 5mm (sizes 5-13)	95201									
- 6.5mm (sizes 5-13)	96201									
- 6.5mm Bigfoot (sizes 14-16)	96211	4220-01-441-4492								

Table 14-1. SAR Equipment Inspection and Procurement (Cont)

Item	P/N	NSN	Inspection Cycles							Notes
			PIS	90 Day	180 Day	365 Day	Load Test	Cond. Insp.	O/I/D Level Maint	
SAR AIRCREWMAN PERSONAL EQUIPMENT (Cont)										
Echozip Boots			X	X					O	
- 3mm (sizes 5-13)	93001	Open Purchase								AMRON INTL
- 5mm (sizes 5-13)	95001									
- 6.5mm (sizes 5-13)	96001									
- 5mm Bigfoot (sizes 14-16)	95161									
Koral King Boots			X	X					O	
- 5mm	DEP-95211-5	4220-01-441-3737								
	-6	-3800								
	-7	-3827								
	-8	-3853								
	-9	-3904								
	-10	-4086								
	-11	-4273								
	-12	-4334								
	-13	-4368								
Wraparound Mask			X	X					O	
- Black	5026-00	4220-01-225-1611								
- Clear	5026-09	Open Purchase								US Divers
- Black	543	Open Purchase								LSC
- Clear	544	Open Purchase								LSC
- Chemlight Bar	1681AS201-1	5340-01-355-4960								
		Open Purchase								LSC
- Strap	5077-09	4220-01-227-7508								
- Strap Clips										
- Plastic	5026-07	Open Purchase								Open Divers
- Metal	5026-08	Open Purchase								Open Divers
Wraparound Mask II			X	X					O	
- Black	5026-20	Open Purchase								US Divers
- Strap Clips	Same as Wraparound									
- Chemlight Bar	Same as Wraparound									

Table 14-1. SAR Equipment Inspection and Procurement (Cont)

Item	P/N	NSN	Inspection Cycles							Notes
			PIS	90 Day	180 Day	365 Day	Load Test	Cond. Insp.	O/I/D Level Maint	
SAR AIRCREWMAN PERSONAL EQUIPMENT (Cont)										
Sherwood Magnum-4 Mask			X	X					O	
- Strap	SWMA25	Open Purchase								Diver's Den
- Clamp (Chemlight)	TBD									
- Screw	2019100-0707	5340-00-964-2557								
- Nut (Self-locking)	NAS602-8	5305-01-350-4928								
	MS21044C08	5310-00-982-6814								
Snorkel	7369-30	4220-01-227-7503	X	X					O	
- Snorkel stSp	7316-05	4220-01-228-0946								
Fins			X	X					O	
- X-Small	6315-00	4220-01-227-6017								
- Large	6211-10	4220-01-015-6762								
- X-Large	6216-00	4220-01-220-5816								
- XX-Large Scuba Pro	25-352-000	4220-01-077-5251								
Fin, Rocket Fin II			X	X					O	US Divers
- Large (9 - 11)	621130	Open Purchase								
- Super (12+)	621135									
- Buckle Kit (2)	621131									
- Replacement Strap	621132									
AMPHIB Boot			X	X					O	US Divers (for use with Rocket Fin II only)
- Size 7	D93751-07	Open Purchase								
- Size 8	-08									
- Size 9	-09									
- Size 10	-10									
- Size 11	-11									
- Size 12	-12									
- Size 13	-13									
SAR Drysuit	MSD 565								O/I/D	Currently distributed by SARMM Office Refer to NAVAIR 13-1-6.7-2
Rescue Swimmer Trunks	MIL-DTL-29112	8415-00-455-6347 8415-00-455-6348 8415-00-455-6349 8415-00-455-6350 8415-00-455-6351 8415-00-455-6352 8415-00-455-6353								The upkeep and cleanliness of the SAR Swimmers Trunks are the responsibility of the SAR crewman.

Table 14-1. SAR Equipment Inspection and Procurement (Cont)

Item	P/N	NSN	Inspection Cycles							Notes
			PIS	90 Day	180 Day	365 Day	Load Test	Cond. Insp.	O/I/D Level Maint	
SAR AIRCREWMAN PERSONAL EQUIPMENT (Cont)										
Rescue Mountain Boots - Sizes 5 thru 13	MIL-B43739	8430-00-458-xxxx	X	X					O	
Signaling Sleeves	465	Open Purchase	X	X					O	LSC
TRISAR			X	X					O	
- Complete Assembly	487MB 487LB 487XLB 487XXB	Open Purchase								LSC
- Harness	487HMB 487HLB 487HXLB 487HXXB	Open Purchase								LSC
- Flotation Vest	487VB	Open Purchase							I	LSC
HBU-23/P	205	4240-01-395-8413	X	X					O	
LPU-28/P	482	4240-01-463-0197	X	X					I	
SRU-40B/P 1586AS301-3	1028-00	4240-01-461-2015	X	X		X			O/I	All SRU-40 series Helicopter Aircrew Breathing Devices are on a 360 day inspection cycle.
- First Stage Assembly	1028-74	1660-01-440-9604								
- Second Stage Assembly	1028-72	1660-01-440-9603								
- Hose Assembly	1028-75	4240-01-438-8410								
- 1st Stage Service Kit	1028-81	4240-01-440-9640								
- 2nd Stage Service Kit	1028-82	4240-01-438-9908								
SAR HABD Holster	100659	Open Purchase	X	X					O	US Divers
TRISAR AND HBU-23/P SURVIVAL EQUIPMENT ITEMS										
SDU-39/N	FRS/MS2000M	6230-01-411-8535	X	X					O	Refer to appropriate chapter or manual for inspection of Survival Items.
MK-124 MOD 0	DL3139734	1370-01-030-8330	X	X					O	
Hook Blade Knife	823AS101-1	1670-01-088-4654	X	X					O	
Chem-light (4-inch)	9-74780	6260-00-106-7478	X	X					O	
Chem-light (6-inch)	95270-52	6260-01-074-4230	X	X					O	
SAR Knife/Scabbard	358	4220-01-278-3007	X	X					O	
Emerson SAR Knife	N-SAR (BTS)	Open Purchase	X	X	X				O	
SAR Swimmer's Radio										
- AN/PRC-149	2155-09093-00	5826-01-466-0186	X	X					O/I/D	
- AN/PRC-149A	TBD	TBD								
- Swimmer Control Unit	2155-09073-00	5998-01-466-0183								

Table 14-1. SAR Equipment Inspection and Procurement (Cont)

Item	P/N	NSN	Inspection Cycles							Notes
			PIS	90 Day	180 Day	365 Day	Load Test	Cond. Insp.	O/I/D Level Maint	
MISCELLANEOUS ITEMS										
Wetsuit Repair Kit	DD-WSRK-2PC	4220-00-912-9849								
Rappelling Rope Bags	TBD	Open Purchase								Rappelling rope bags and equipment bags shall be commercially purchased per local command requirements. Bags shall be inspected at the same time the equipment is inspected.
Equipment Bags	TBD	Open Purchase								
Rescue Swimmer Gear Bag	304	Open Purchase								LSC Gear Bag shall be inspected at the same time the equipment is inspected.

CONTACT INFORMATION FOR OPEN PURCHASE EQUIPMENT		
SAR Model Manager Office (SARMM) NAS North Island, CA DSN 735-2479 (619) 545-2479	Lifesaving Systems Corp (LSC) 220 Elsberry Rd Apollo Beach, FL 33572-2289 (813) 645-2748 http://www.lifesavingsystems.com/	REI (800) 426-4840 http://rei.com
Descent Control Inc. 3920 Ayers Rd. Fort Smith, AR 72908 (800) 643-2539 (501) 646-4382	Divers Den 4833 East Highway 98 Panama City, FL 32404-1606 (800) 272-4777 (850)-874-0515	Emerson Knives Inc. P.O. Box 4180 Torrence, CA 90510-4180 POC: Derek Russell, Sales Manager (310) 212-7455 FAX (310) 212-7289
Liberty Mountain Sports 4375 West 1980 South Suite 100 Salt Lake City, UT 84104 (800) 366-2666 http://libertymountain.com/	Northwest River Supply 2009 South Main St Moscow, ID 83843 (800) 635-5202 http://www.nrsweb.com/	CMC Rescue, Inc. P.O. Box 6870 Santa Barbara, CA 93160-6870 800-235-5741 (ask for military sales) http://www.cmcrescue.com
AMRON INTL (760) 746-3834 Email: sales@amronintl.com http://www.amronintl.com/	US Divers (Aqualung) Military Sales (800) 252-3483 (760) 597-5081 Email: sryan@aqualung.com http://aqualung.com/	

Section 14-2. Helicopter Rescue Equipment Bag

14-12. DESCRIPTION.

14-13. The Helicopter Rescue Equipment Bag (P/Ns 261 and 1682AS100-1) (figure 14-1), also referred to as "SAR Bag or SAR Curtain", is made of heavy-duty lightweight International orange denier nylon with labeled pockets for storage of rescue equipment. It can be folded or hung vertically with equipment installed.

14-14. The addition of rescue equipment stowed in the SAR bag is used to assist the SAR crewman in the performance of his/her duties during the SAR mission. Each item of rescue equipment is stowed in a designated pocket of the SAR bag for easy access. For the list of required rescue equipment, refer to NTTP 3-50.1.

14-15. MODIFICATION.

14-16. There are no modifications for the SAR Bag that are required or authorized.

14-17. MAINTENANCE.

14-18. INSPECTION. All SAR Bags shall be subjected to a Place-In-Service Inspection and a Special Inspection. Refer to table 14-1 for required inspection cycles.

14-19. Place-In-Service Inspection. The Place-In-Service Inspection shall be performed in accordance with paragraph 14-20, steps 1 thru 7 and 10.

14-20. Special Inspection. To perform the Special Inspection of the SAR Bag, proceed as follows:

1. Inspect material for cuts, tears and rips.

2. Inspect stitching for broken, loose or fraying stitches.

3. Inspect snap hooks for proper operation and security of attachment.

4. Inspect handles for security of attachment.

5. Inspect metal components for corrosion.

6. Inspect for contaminants such as oil, grease, fuel, salt-water residue, etc.

7. Inspect markings on pockets for legibility.

8. Repair SAR Bag in accordance with paragraph 14-21.

9. Clean SAR Bag in accordance with paragraph 14-22.

10. Install inspected rescue equipment into designated pockets as required by NTTP 3-50.1.

14-21. REPAIR. Repair of the SAR Bag shall consist of patching of minor tears, stitching of broken or fraying stitches, replacement of broken components and replacement of markings. Unlimited repairs are authorized, however, replace SAR Bag when no longer practical to repair. Replace markings using an indelible marking pen.

14-22. CLEANING. Contaminated SAR Bags shall be cleaned as follows:

Materials Required

Quantity	Description	Reference Number
As Required	Detergent, General Purpose	MIL-D-16791
As Required	Cloth, Lint-Free	MIL-C-85043

1. Rinse bag with clean fresh water.

2. Using a cloth and a mixture of clean water and detergent, scrub or wipe contaminated area until area is clean.

3. Rinse bag a second time with fresh water to remove soap and contaminants.

4. Hang to dry.

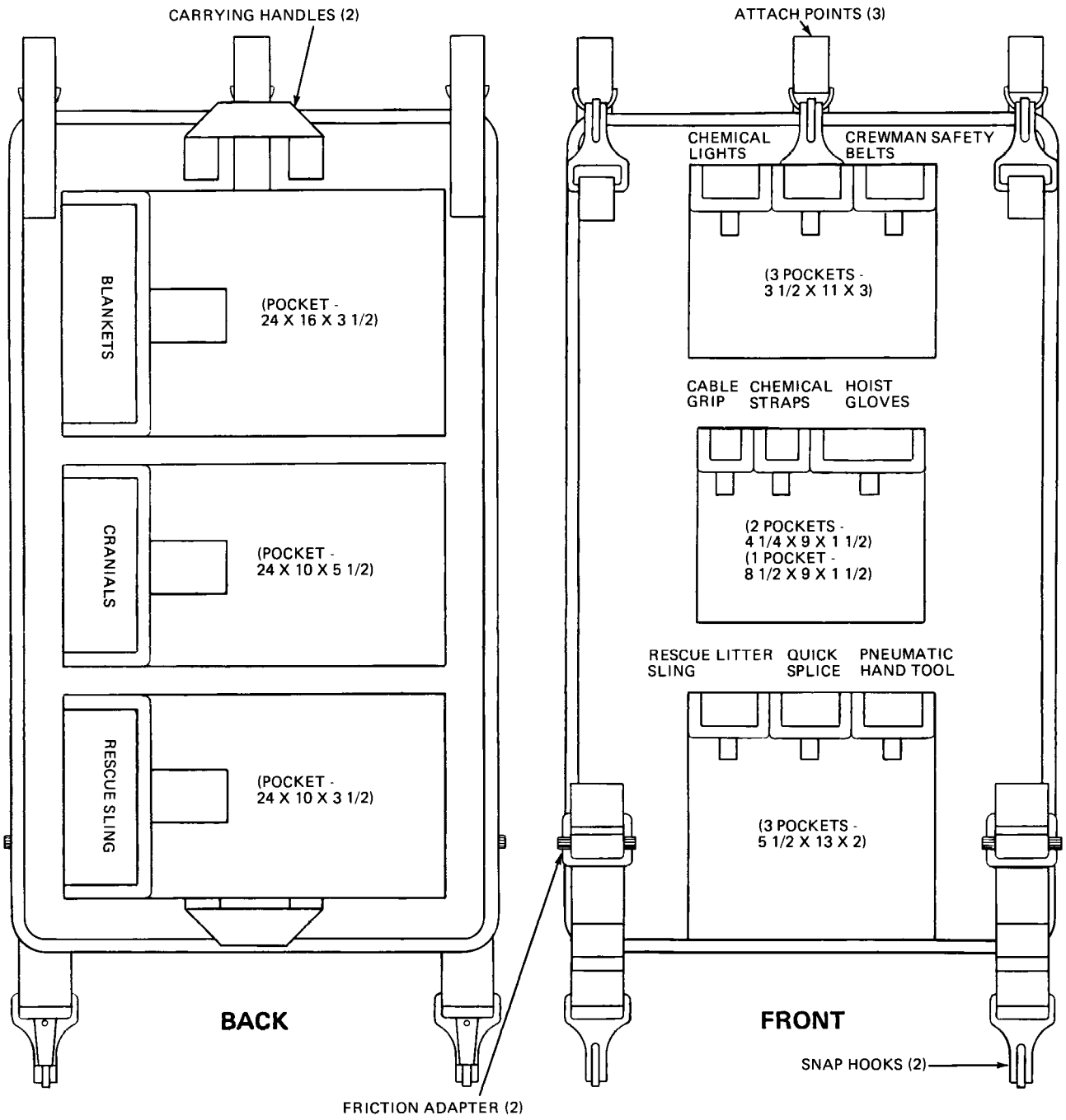

P/N 1682AS100-1

01400101

Figure 14-1. Helicopter Rescue Equipment Bag (Sheet 1 of 2)

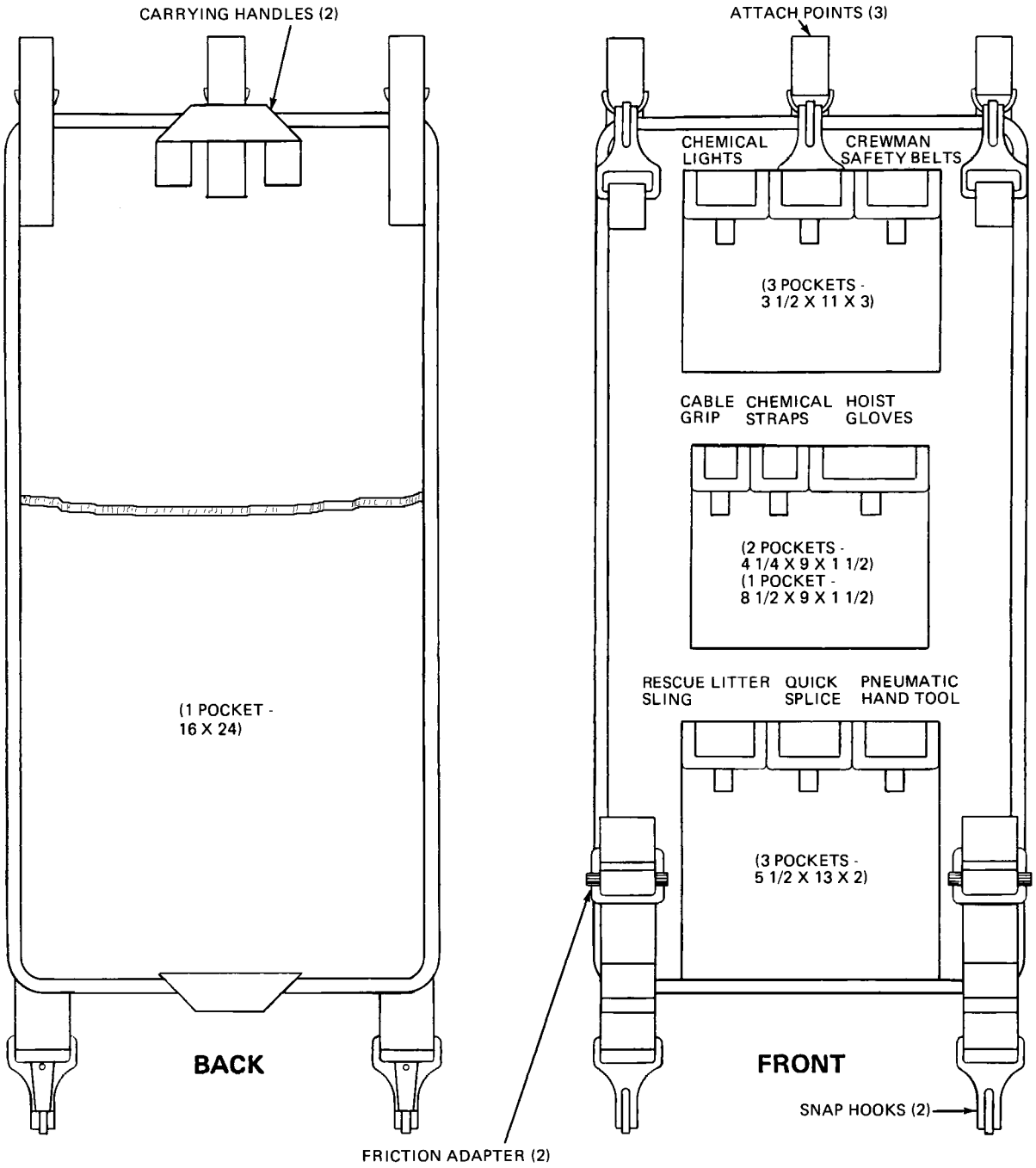

NOTE: P/N 261 IS AUTHORIZED FOR USE IN THE H-60 AIRCRAFT.

P/N 261

01400102

Figure 14-1. Helicopter Rescue Equipment Bag (Sheet 2 of 2)

Section 14-3. Helicopter Rescue Equipment Bag Contents

14-23. GENERAL.

14-24. The following rescue equipment is part of the Helicopter Rescue Equipment Bag.

Section 14-3.1. Cable Grip

14-25. DESCRIPTION.

14-26. In the event of a Rescue Hoist failure, the Cable Grip (figure 14-2) can be attached to the hoist cable and aircrewmans safety belt. The Cable Grip is capable of supporting 1,000 lbs.

14-27. MODIFICATION.

14-28. There are no modifications for the Cable Grip that are required or authorized.

14-29. MAINTENANCE.

14-30. INSPECTION. All Cable Grips shall be subjected to a Place-In-Service Inspection and a Special Inspection. Refer to table 14-1 for required inspection cycles.

14-31. Place-In-Service Inspection. The Place-In-Service Inspection shall be performed in accordance with paragraph 14-32, steps 1 thru 4.

14-32. Special Inspection. To perform the Special Inspection of the Cable Grip, proceed as follows:

1. Inspect for missing, bent, fractured, or damaged components.

2. Check hardware for security of attachment, corrosion, wear, and ease of operation.

3. Inspect for contaminants such as dirt, fuels, saltwater residue, etc.

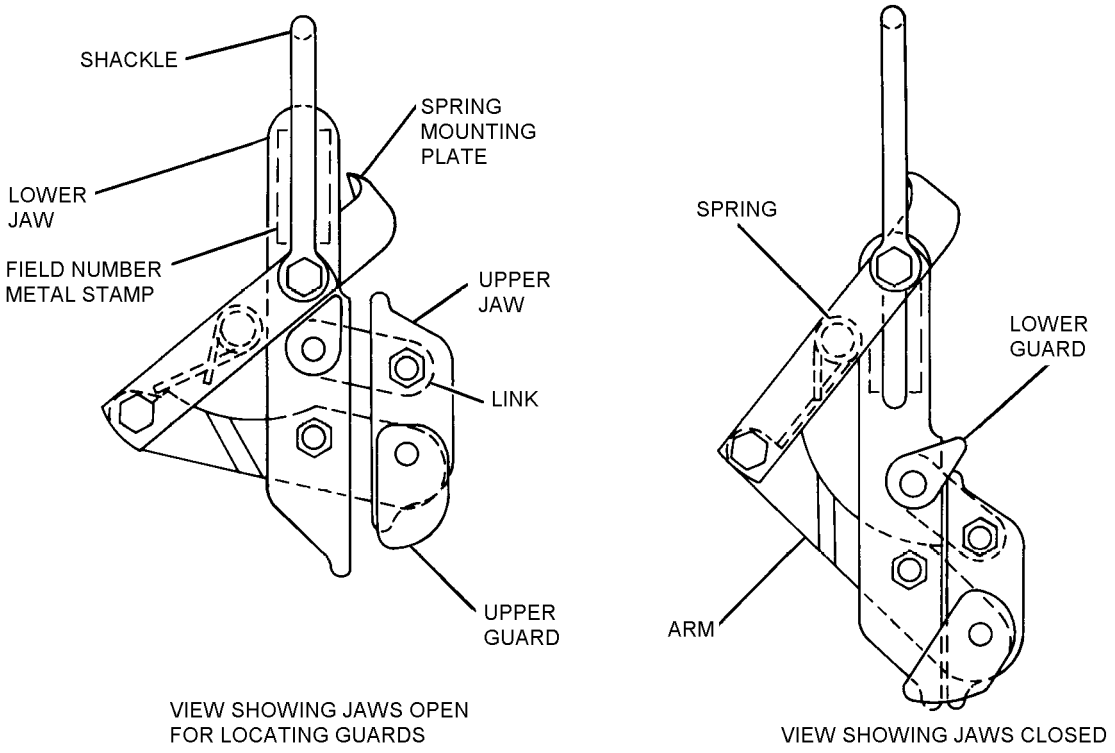

Figure 14-2. Cable Grip, Parts Nomenclature

4. Check for sharp edges and projections.

5. Repair Cable Grip in accordance with paragraph 14-33.

6. Clean Cable Grip in accordance with paragraph 14-34.

14-33. REPAIR. Repairs are limited to removal of corrosion, cleaning, lubrication and the filing of burrs and nicks as necessary. For all other discrepancies, the Cable Grip shall be replaced.

14-34. CLEANING. To clean the Cable Grip, proceed as follows:

NOTE

Corrosion that cannot be removed shall render the item non-RFI and it shall be removed from service and replaced.

Materials Required

Quantity	Description	Reference Number
As Required	Detergent, General Purpose	MIL-D-16791
As Required	Cloth, Lint-Free	MIL-C-85043
As Required	Lubricating Oil, General Purpose	VV-L-800

1. Remove corrosion in accordance with NAVAIR 01-1A-509 manual.

2. Use low-pressure air to remove foreign objects.

3. Remove contaminants using a mixture of water and detergent and a cloth.

4. Rinse thoroughly in clean water to remove soap and contaminants.

5. Dry with a clean cloth or low-pressure air.

6. Lubricate Cable Grip moving parts with lubricating oil and wipe excess using a cloth.

14-35. ILLUSTRATED PARTS BREAKDOWN.

14-36. The Illustrated Parts Breakdown lists and illustrates the assemblies and detail parts of the Cable Grip.

14-37. The Illustrated Parts Breakdown should be used when requisitioning and identifying parts.

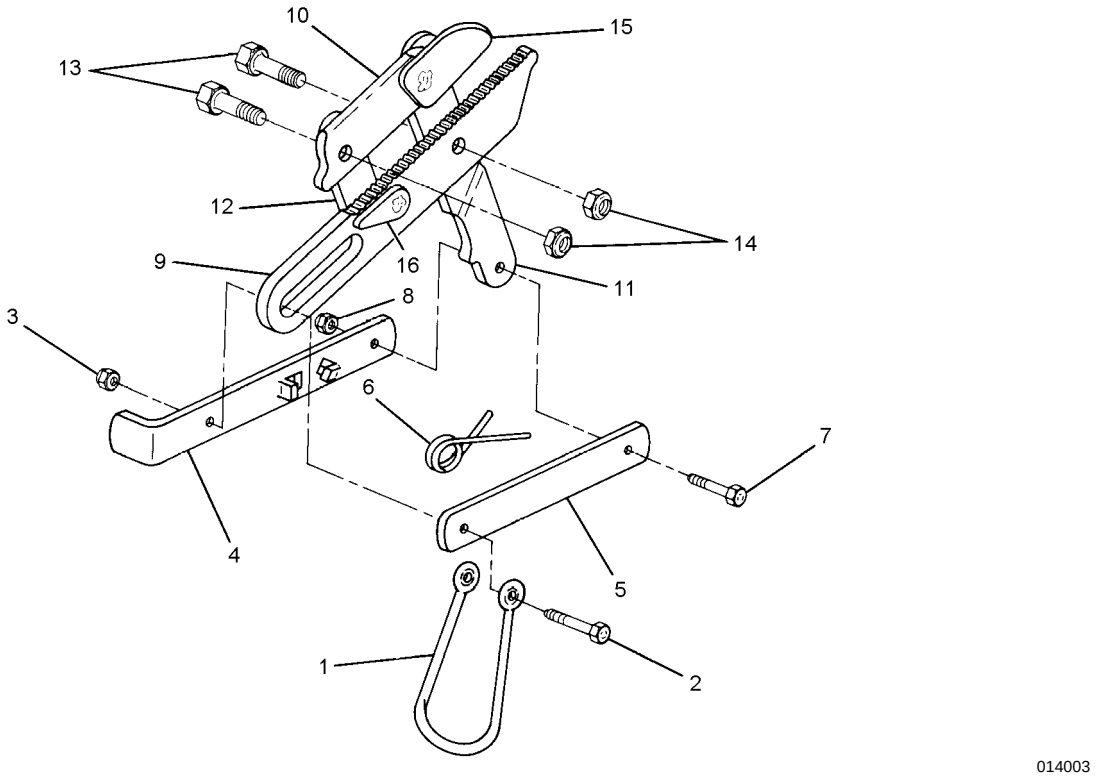

Figure 14-3. Cable Grip

Section 14-3.1.1 Multi Place Life Raft (MPLR) Weak Link

14-37.1 GENERAL.

14-37.2 The MPLR Weak Link is designed to be used in conjunction with the LRU-30A/A (8-man), LRU-31A/A (12-man) and LRU-32A/A (20-man) multi-place life rafts when deploying rafts to survivors at sea. Refer to NTTP 3-50.1 for usage and deployment procedures.

NOTE

MPLR Weak-Link(s) shall be stored inside the cable grip pocket of the helicopter rescue equipment bag. The number of required weak links shall correspond to the number of life-rafts installed in the aircraft.

14-37.3 MAINTENANCE.

14-37.4 The MPRL Weak Link shall be locally manufactured in accordance with paragraph 14-37.9. The weak link shall have a visual inspection at the same inspection interval as the helicopter equipment rescue bag.

14-37.5 INSPECTION.

14-37.6 Inspect MPLR Weak Link as follows:

1. Inspect cord and snap hooks for contamination and corrosion.

2. Inspect snap hooks for proper operation.

3. Repair in accordance with paragraph 14-37.7.

14-37.7 REPAIR.

14-37.8 Repairs are limited to the replacement of either the Type I cord or snap hook(s) and shall be accomplished in accordance with paragraph 14-37.9.

14-37.9 FABRICATION.

14-37.10 Fabricate MPLR Weak Link as follows:

Materials Required

Quantity	Description	Reference Number
2	Snap Hook, 2 5/32 inch	(Note 1)
As Required	Nylon Cord, Type I	NIIN 01-214-5128 MIL-C-5040

Note 1: Snap Hook, P/N 365, shall be ordered from the following source:

Life Saving Systems Corp.
220 Elsberry Road
Apollo Beach, FL 33572-2289
(813) 645-2748
www.lifesavingsystems.com

14-37.11 Finished length between the two snap hook rings shall be 3-inches plus or minus 1/2-inch. Cut a 12-inch length of Type I nylon cord and sear end. Tie an overhand knot at one end of nylon cord. Loop that end of the nylon cord through one snap hook ring and secure with a bowline knot. Loop the opposite end of the nylon cord around the other snap hook ring. Distance between snap hook rings shall be 3-inches plus or minus 1/2-inch. Secure with a bowline knot followed by an overhand knot. Cut and sear excess cord.

THIS PAGE INTENTIONALLY LEFT BLANK.

Figure and Index Number	Part Number	Description 1 2 3 4 5 6 7	Units Per Assembly	Usable On Code
14-3	MS90382-1	GRIP, Cable	1	
-1	MS90382-9	. SHACKLE (ATTACHING PARTS)	1	
-2	NAS1304-16	. BOLT, Machine	1	
-3	MS20364D428	. NUT, Self-Locking ---*---	1	
-4	MS90382-4	. PLATE, Spring mounting	1	
-5	MS90382-3	. PLATE, Spring retaining	1	
-6	MS90382-11	. SPRING	1	
-7	MS90382-8	. BOLT, Machine	1	
-8	MS20364D428	. NUT, Self-Locking	1	
-9	MS90382-2	. JAW, Lower	1	
-10	MS90382-5	. JAW, Upper	1	
-11	MS90382-6	. ARM	1	
-12	MS90382-10	. LINK	1	
-13	NAS1306-8	. BOLT, Machine	2	
-14	MS20364D624	. NUT, Self-Locking	2	
-15	MS90382-8	. GUARD, Upper	1	
-16	MS90382-7	. GUARD, Lower	1	

Section 14-3.2. Double Rescue Hook

14-38. DESCRIPTION.

14-39. There are two Double Rescue Hooks (P/N MS18027-2A) (figure 14-4) that are part of the total SAR equipment ensemble. One is the Double Rescue Hook that is attached to the aircraft hoist assembly and the other is attached to the Hoist Quick Splice. The Double Rescue Hook is designed to connect personnel and/or equipment to the aircraft hoist assembly during sea and land rescue operations. The Double Rescue Hook consists of a large spring-loaded hook that supports 3,000 lbs, a small spring loaded hook that supports 1,000 lbs and a bottom ring which supports 1,500 lbs. A bearing at the top of the hook allows the hook to rotate freely about its axis.

14-40. MODIFICATION.

14-41. There are no modifications for the Rescue Hook that are required or authorized.

14-42. MAINTENANCE.

NOTE

Double Rescue Hooks that are attached to the aircraft Rescue Hoist assembly are considered aircraft installed equipment and shall be inspected in accordance with applicable aircraft MRCs.

14-43. INSPECTION. Inspection of the Double Rescue Hook shall be performed in accordance with paragraph 14-52 of this manual.

14-44. ILLUSTRATED PARTS BREAKDOWN.

14-45. The Illustrated Parts Breakdown lists and illustrates the assemblies and detail parts of the Rescue Hook.

14-46. The Illustrated Parts Breakdown should be used when requisitioning and identifying parts.

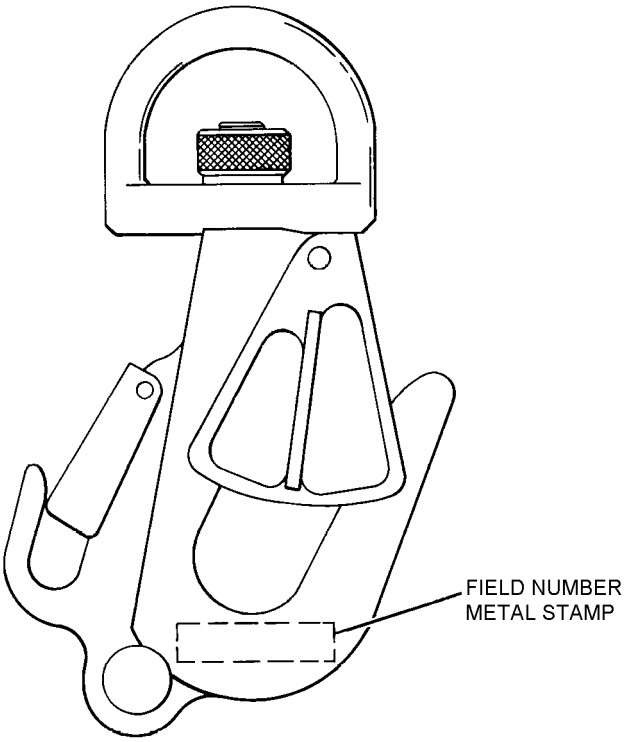

014004

Figure 14-4. Double Rescue Hook (MS18027-2A)

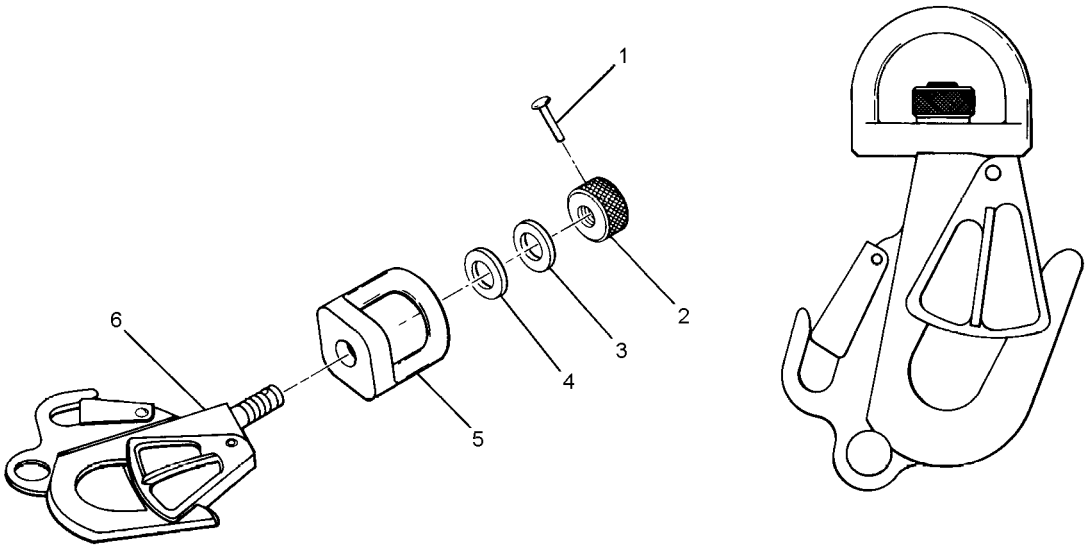

014005

Figure 14-5. Double Rescue Hook

Figure and Index Number	Part Number	Description 1 2 3 4 5 6 7	Units Per Assembly	Usable On Code
14-5	MS18027-2A	RESCUE HOOK ASSEMBLY	1	
-1	MS20613-3C14	. RIVET	1	
-2	MS10827-8	. NUT, Knurled	1	
-3	MS18027-9	. WASHER	1	
-4	AN960-C816-L	. WASHER	1	
-5	MS18027-6	. FITTING, Swivel	1	
-6	MS18027-2	. BODY, Hook	1	

Section 14-3.3. Hoist Quick Splice

14-47. DESCRIPTION.

14-48. The Hoist Quick Splice (figure 14-6) is a device used by rescue personnel in the event that the hoist cable of the helicopter has been cut or broken. The Hoist Quick Splice is locally manufactured. Refer to paragraph 14-57.

14-49. MODIFICATION.

14-50. There are no modifications for the Hoist Quick Splice required or authorized.

14-51. MAINTENANCE.

14-52. INSPECTION. The Hoist Quick Splice shall be subjected to a Place-In-Service Inspection and a Special Inspection. Refer to table 14-1 for required inspection cycles.

14-53. Place-In-Service Inspection. The Place-In-Service Inspection shall be performed in accordance with paragraph 14-54, steps 1 thru 6.

14-54. Special Inspection. To perform the Special Inspection of the Hoist Quick Splice, proceed as follows:

1. Inspect Rescue Hook for missing, bent, fractured or damaged components.

2. Inspect cable swags for security of attachment.

3. Inspect cable for broken wires.

4. Inspect aluminum plate for nicks and burrs.

5. Inspect for legibility of numbering and arrows.

6. Inspect for corrosion and contaminants such as dirt, fuels, salt-water residue, etc.

7. Repair Hoist Quick Splice in accordance with paragraph 14-55.

14-55. REPAIR. Repair Hoist Quick Splice as follows:

1. Remove corrosion and contaminants, clean and lubricate in accordance with paragraph 14-56.

2. Replace cable in accordance with paragraph 14-57, steps 5 thru 11.

3. File nicks and burrs smooth using a file or emery cloth.

4. Replace numbers and arrows as previously made.

14-56. CLEANING. To clean the Hoist Quick Splice, proceed as follows:

NOTE

Corrosion that cannot be removed shall render the item non-RFI and it shall be removed from service and replaced.

Materials Required

Quantity	Description	Reference Number
As Required	Detergent, General Purpose	MIL-D-16791
As Required	Cloth, Lint-Free	MIL-C-85043
As Required	Lubricating Oil, General Purpose	VV-L-800

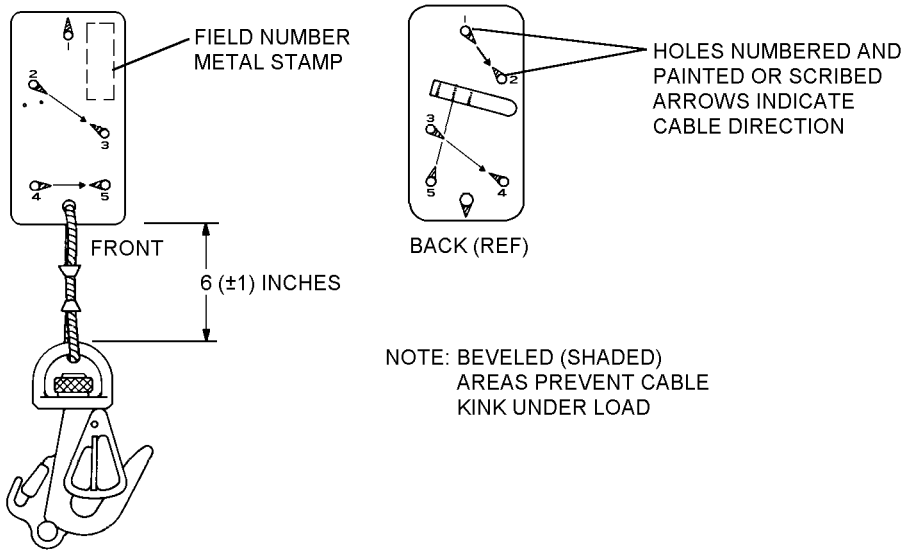

Figure 14-6. Hoist Quick Splice

1. Remove corrosion in accordance with NAVAIR 01-1A-509 manual.

2. Use low-pressure air to remove foreign objects.

3. Remove contaminants using a mixture of water and detergent and a cloth.

4. Rinse thoroughly in clean water to remove soap and contaminants.

5. Dry with a clean cloth or low-pressure air.

6. Lubricate Rescue Hook bearing with lubricating oil and wipe excess using a cloth.

14-57. FABRICATION OF HOIST QUICK SPLICE.

To fabricate the Hoist Quick Splice, proceed as follows:

Materials Required

Quantity	Description	Reference Number
1	Rescue Hook	MS18027-2A NIIN 00-863-8546
As Required	Cable, 3/16-inch, Type 1	NIIN 00-222-4492
	or	
	Cable, 7/32-inch, Type 1	NIIN 00-222-4478
2	Sleeve, Swaging (3/16-inch cable)	NIIN 00-132-9162

Materials Required (Cont)

Quantity	Description	Reference Number
2	Sleeve, Swaging (7/32-inch cable)	NIIN 00-431-5539
2	Thimble (3/16-inch cable)	AN100C6 NIIN 00-171-4912
2	Thimble (7/32-inch cable)	AN100C8 NIIN 00-262-1894
As Required	Aluminum Plate	6061T6
As Required	Stainless Steel, 1/32-inch	—
2	Rivets, Stainless Steel, 5/32-inch	—

NOTE

Refer to figure 14-7 for detailed manufacturing diagrams of Hoist Quick Splice.

1. Cut aluminum plate 6 5/8 inches by 3 inches.

2. Round corners of plate and remove sharp edges and burrs.

3. Drill holes and groove shaded areas with file to eliminate sharp edges and prevent cable kink.

4. Form the spring clip from the 1/32-inch stainless steel and attach to aluminum plate with two 5/32-inch rivets at a 15 degree angle.

5. Measure and cut a 12 inch piece of 3/8-inch cable.

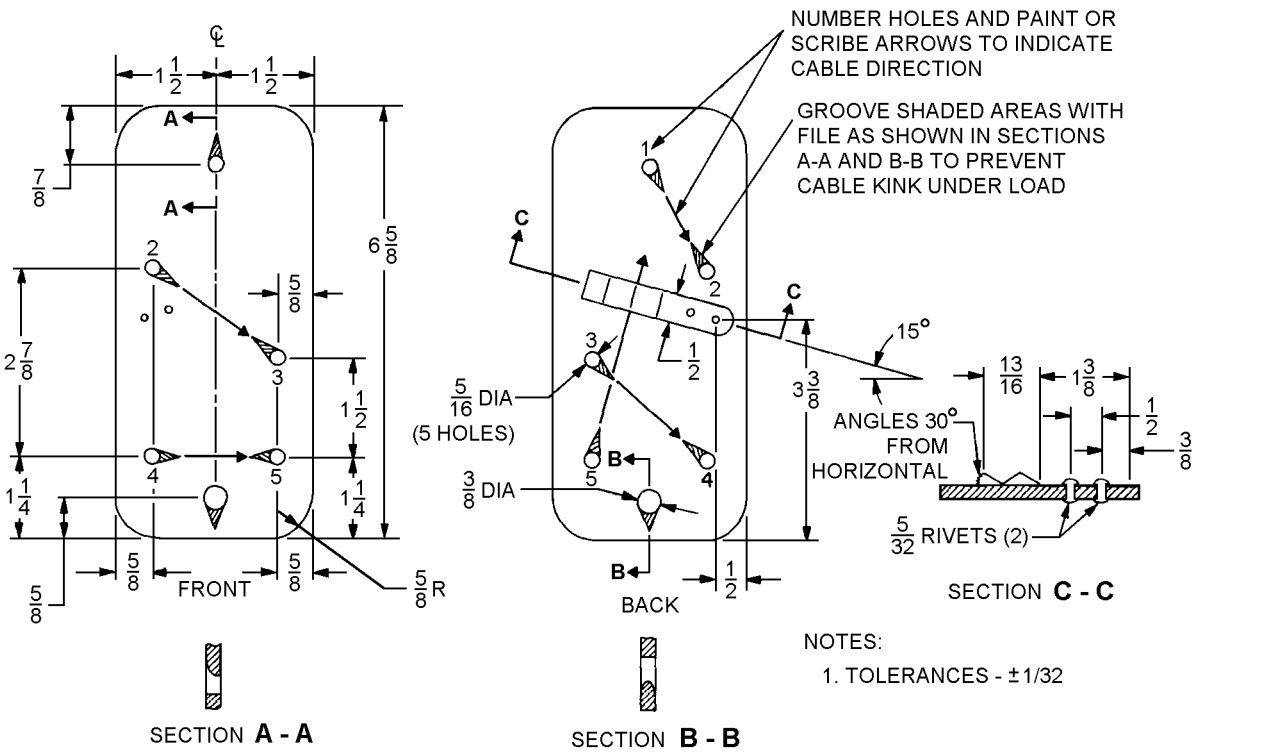

Figure 14-7. Fabrication of Hoist Quick Splice Plate

6. Attach one thimble to the 3/8-inch cable hole in Hoist Quick Splice Plate.

7. Thread cable through 3/8-inch hole around thimble and swage cable with swaging sleeve.

8. Attach the other thimble to the top swivel ring of the Double Rescue Hook.

9. Thread opposite end of cable through swivel ring around thimble and swage cable with swaging sleeve. Finished length of 3/8-inch cable shall be 6 plus or minus 1 inch from bottom edge of aluminum plate to top edge of swivel ring. Refer to figure 14-7.

10. Perform a 10 minute load test with a load of 1000 lbs plus/minus 100 lbs.

11. Inspect cable and swaging sleeves for signs of damage.

12. Etch numbers on holes and paint or etch arrows to indicate cable direction.

13. Stamp or etch local field number on aluminum plate.

Section 14-3.4. Hoisting Sling Assembly

14-58. DESCRIPTION.

14-59. The Hoisting Sling Assembly (figure 14-8) is designed for quick attachment and detachment from the Stokes Litter and MEDEVAC Litter. It consists of two sets of stainless steel cables with each set having two cables measuring 33 and 41 inches. Each set of cables is joined together by a single stainless steel lifting ring and color-coded locking carabiners at the opposite end of cable. Color-coded locking carabiners coincide with the color coded attachment points of the Stokes Litter and MEDEVAC Litter.

14-60. MODIFICATION.

14-61. There are no modifications for the Hoisting Sling Assembly that are required or authorized.

14-62. MAINTENANCE.

14-63. INSPECTION. The Hoisting Sling Assembly shall be subjected to a Place-In-Service Inspection and a Special Inspection. Refer to table 14-1 for required inspection cycles.

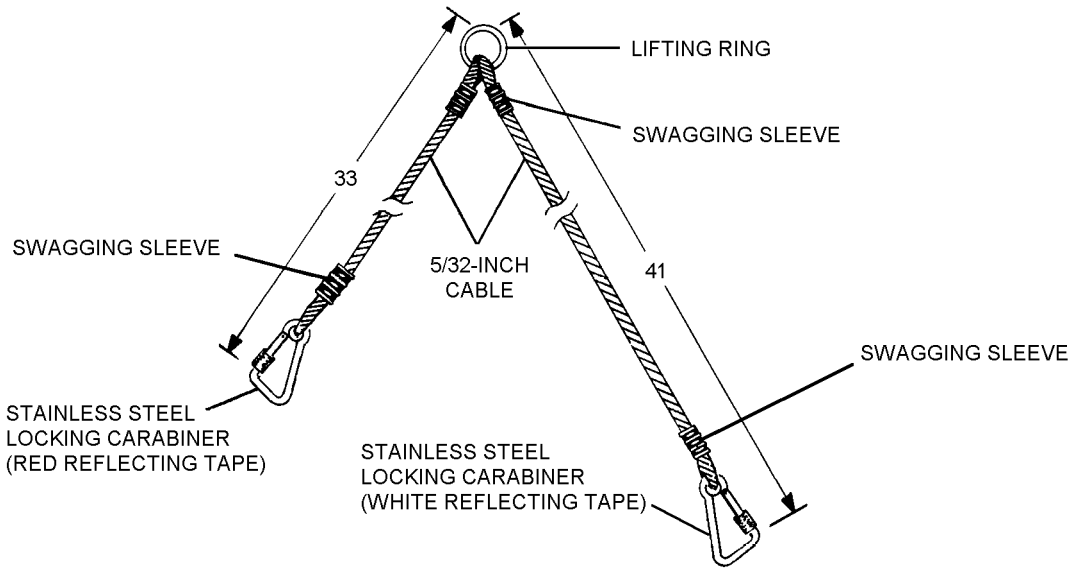

014008

Figure 14-8. Hoisting Sling Assembly (One Set)

14-64. Place-In-Service Inspection. The Place-In-Service Inspection shall be performed in accordance with paragraph 14-65, steps 1 thru 6.

14-65. Special Inspection. To perform the Special Inspection of the Hoisting Sling Assembly, proceed as follows:

1. Inspect cables for defects such as kinks and broken strands.

2. Inspect all hardware for corrosion and contaminants such as grease, dirt, fuels, etc.

3. Inspect locking carabiners for ease of operation and proper color coding. Red reflective tape shall be attached to the 33-inch cable carabiner and white reflective tape shall be attached to the 41-inch cable carabiner.

4. Inspect each swaging sleeve for one crimp, identified by a 1/2 inch wide compression.

5. Inspect lifting ring for wear, damage and deformity.

6. Inspect for mfg's tag with date of mfg.

7. Repair in accordance with paragraph 14-66.

14-66. REPAIR. Repairs are limited to the removal of corrosion, contaminants the replacement of color-coded reflective tape and replacement of mfg tag. All other discrepancies are cause for the replacement of the Hoisting Sling Assembly.

Materials Required

Quantity	Description	Reference Number
As Required	Tape, Red, Reflective	NIIN 00-949-7552
As Required	Tape, White, Reflective	NIIN 01-078-8660

1. Cut a 2-inch by 2-inch piece of reflective tape and attach it as identified in figure 14-8.

2. If mfg's tag is missing, review history card for date of mfg and tag Hoisting Sling.

3. Clean corrosion, and contaminants in accordance with paragraph 14-67.

14-67. CLEANING. To clean the Hoisting Sling Assembly, proceed as follows:

NOTE

Corrosion that cannot be removed shall render the item non-RFI and it shall be removed from service and replaced.

Materials Required

Quantity	Description	Reference Number
As Required	Detergent, General Purpose	MIL-D-16791
As Required	Cloth, Lint-Free	MIL-C-85043
As Required	Lubricating Oil, General Purpose	VV-L-800

1. Remove corrosion in accordance with NAVAIR 01-1A-509 manual.

2. Use low-pressure air to remove foreign objects.

3. Remove contaminants using a mixture of water and detergent and a cloth.

4. Rinse thoroughly in clean water to remove soap and contaminants.

5. Dry with a clean cloth or low-pressure air.

6. Lightly lubricate locking carabiners gate sleeve threads and gate swivel pin with lubricating oil and wipe excess using a cloth.

14-68. LOAD TEST. (Conditional Only) Perform Load Test in accordance with paragraph 14-189, MEDEVAC Litter Load Test.

Section 14-3.5. Cable Cutter

14-69. DESCRIPTION.

14-70. The Cable Cutter (figure 14-9) is used to cut the hoist cable in the event of a malfunction. It may be used as a replacement to the Pneumatic Rescue Hand Tool.

14-71. MODIFICATION.

14-72. There are no modifications for the Cable Cutter that are required or authorized.

14-73. MAINTENANCE.

14-74. INSPECTION. The Cable Cutter shall be subjected to a Place-In-Service Inspection and a Special Inspection. Refer to table 14-1 for required inspection cycles.

14-75. Place-In-Service Inspection. The Place-In-Service Inspection shall be performed in accordance with paragraph 14-76, steps 1 thru 3.

14-76. Special Inspection. To perform the Special Inspection of the Cable Cutter, proceed as follows:

1. Inspect for ease of operation.

2. Inspect for corrosion and contaminants.

3. Inspect plastic/rubber handle grips for damage.

4. Repair in accordance with paragraph 14-77.

14-77. REPAIR. Repairs are limited to the removal of corrosion and contaminants and the lubrication of the hinge points. Refer to paragraph 14-78. All other discrepancies are cause for replacement of Cable Cutter.

14-78. CLEANING. To clean the Cable Cutter, proceed as follows:

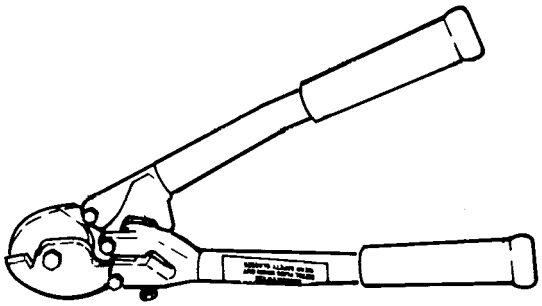

014009

Figure 14-9. Cable Cutter

NOTE

Corrosion that cannot be removed shall render the item non-RFI and it shall be removed from service and replaced.

Materials Required

Quantity	Description	Reference Number
As Required	Detergent, General Purpose	MIL-D-16791
As Required	Cloth, Lint-Free	MIL-C-85043
As Required	Lubricating Oil, General Purpose	VV-L-800

1. Remove corrosion in accordance with NAVAIR 01-1A-509 manual.

2. Use low-pressure air to remove foreign objects.

3. Remove contaminants using a mixture of water and detergent and a cloth.

4. Rinse thoroughly in clean water to remove soap and contaminants.

5. Dry with a clean cloth or low-pressure air.

6. Lightly lubricate hinge points on cable cutter with lubricating oil and wipe excess using a cloth.

Section 14-3.6. Pneumatic Rescue Hand Tool

14-79. DESCRIPTION.

14-80. The Pneumatic Rescue Hand Tool (figure 14-10) is a cartridge operated cutting device. It is designed to cut stainless steel cable up to 7/32-inch, multiple strands of parachute suspension line as well as webbing with a thickness up to and including 1/4-inch and widths up to 1 3/4-inches in single cuts. A nylon carrying case houses two additional nitrogen cartridges.

NOTE

When the Pneumatic Rescue Hand Tool has failed the functional test, it shall be replaced with the Cable Cutter, Section 14-3.5. Future procurements of the Pneumatic Rescue Hand Tool are not authorized.

14-81. MODIFICATION.

14-82. There are no modifications for the Pneumatic Rescue Hand Tool that are required or authorized.

14-83. MAINTENANCE.

14-84. INSPECTION. The Pneumatic Rescue Hand Tool shall be subjected to a Place-In-Service Inspection and a Special Inspection. Refer to table 14-1 for required inspection cycles.

WARNING

The Pneumatic Rescue Hand Tool is pressurized to 3,000 psi and may be hazardous if not vented before performing maintenance actions. Use caution when performing any maintenance to avoid injury.

14-85. Place-In-Service Inspection. The Place-In-Service Inspection shall be performed in accordance with paragraph 14-86, steps 1 thru 3.

14-86. Special Inspection. To perform the Special Inspection of the Pneumatic Rescue Hand Tool, proceed as follows:

1. Remove pressure by squeezing the trigger and at the same time depressing the vent button under the spring-loaded cover. Remove expended cartridge by unscrewing knurled cap at base of handle.

2. Inspect for corrosion and contaminants such as dirt, oils, salt-water residue, etc.

3. Perform a functional test in accordance with paragraph 14-87.

4. Repair Pneumatic Rescue Hand Tool in accordance with paragraph 14-91.

14-87. FUNCTION TEST. The Function Test consists of a Leakage Test, Trigger Force Test, and Performance Test.

NOTE

Failure of the Functional Test shall render the Pneumatic Rescue Hand Tool non-RFI and it shall be removed from service and replaced with the Cable Cutter.

Materials Required

Quantity	Description	Reference Number
As Required	Scale (Push/Pull)	DPP-50 NIIN 00-473-0108

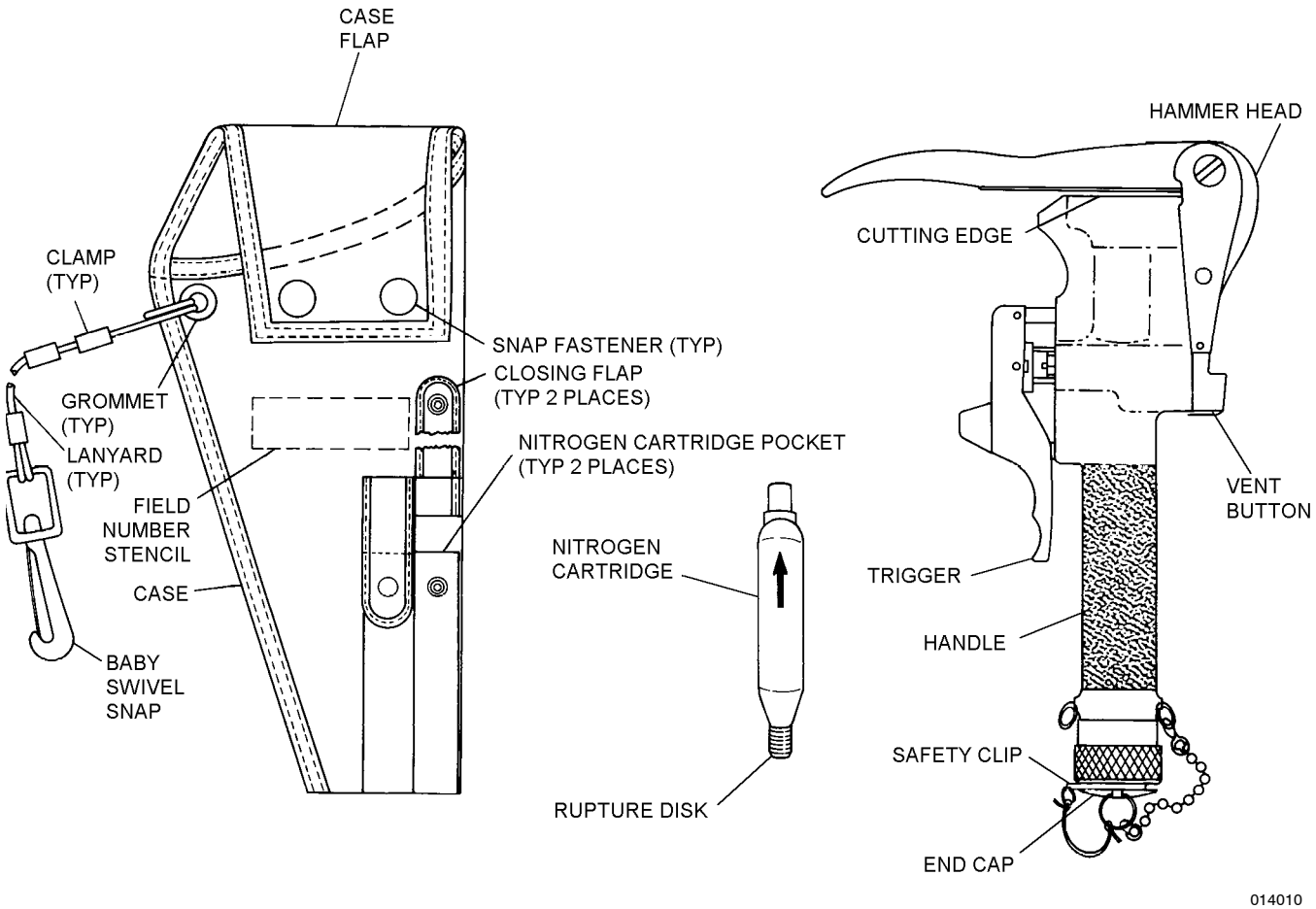

Figure 14-10. Pneumatic Rescue Hand Tool and Case, Parts Nomenclature

14-88. Leakage Test. To perform a Leakage Test, proceed as follows:

1. Pressurize the hand tool to 3,000 psi with a nitrogen cartridge.

2. Immerse the pressurized hand tool in fresh water, and rotate hand tool in three directions to eliminate any trapped air in external pockets.

3. Any leakage after 1 minute of immersion will indicate a defective seal.

14-89. Trigger Force Test. To perform a Trigger Force Test, proceed as follows:

1. Mount the pressurized hand tool in an appropriate fixture, cradle, or V-block.

2. Using a push-pull scale, measure the trigger force necessary to actuate the blade on the first stroke. The force shall be applied midway on the finger area of the trigger.

3. Two thicknesses of Type XIII webbing (MIL-W-4088C) should be cut. The trigger force shall be between 5 and 20 pounds. Trigger force outside this range indicates the need for repair of the trigger (forward) valve or the trigger assembly.

14-90. Performance Test. To conduct a Performance Test, proceed as follows:

NOTE

The Pneumatic Rescue Hand Tool is designed for approximately 10 cuts on a new 3000-psi nitrogen gas cartridge.

If the Performance Test is performed in conjunction with the Trigger Force Test and a new cartridge is not used, it is necessary to keep track of the total number of cuts expended by the original 3000-psi nitrogen cartridge.

1. Cut a second double thickness of webbing, and with the trigger in the depressed position, immerse the hand tool in water.

2. Any leakage after 1 minute of immersion indicates the piston seal leaks or the exhaust (rear) valve leaks.

3. Make ten additional double webbing cuts. After the tenth cut, with the trigger depressed, immerse the hand tool in water.

4. Check for leakage during 1 minute of immersion. Any leakage indicates the trigger (forward) valve is faulty.

5. Make additional cuts of double webbing until hand tool fails to cut through both thicknesses. The total number of cuts should exceed 10.

6. Failure to make 17 cuts without an apparent leak is an indication that the gas cartridge may not have been fully charged, the blade may need resharpening, the primary release system of the valve may be clogged (also indicated by high trigger force), the grease on the piston may have become gummy, and/or the anvil may be scored, allowing longer than normal piston travel. The hand tool is usable with reduced cutting capacity, but this indicates maintenance is required.

7. Perform maintenance procedures in accordance with paragraph 14-83.

8. If after maintenance and after completing at least two sets of functional tests in accordance with paragraph 14-87 the Pneumatic Rescue Hand Tool fails to provide at least 10 cuts with no leakage, the tool shall be considered unacceptable.

14-91. REPAIR. Repairs are limited to removal of corrosion, contaminants and lubrication. Refer to paragraph 14-92. For all other discrepancies, remove Pneumatic Rescue Hand Tool from service.

14-92. CLEANING. To clean the Pneumatic Rescue Hand Tool, proceed as follows:

NOTE

Corrosion that cannot be removed shall render the item non-RFI and it shall be removed from service.

Materials Required

Quantity	Description	Reference Number
As Required	Cloth, Lint-Free	MIL-C-85043
As Required	Pneumatic Grease	MIL-L-4343 or equivalent

1. Remove corrosion in accordance with NAVAIR 01-1A-509 manual.

2. Use low-pressure air to remove foreign objects.

3. Remove contaminants using a mixture of water and low-pressure air.

4. Rinse thoroughly in clean water to remove contaminants.

5. Dry with a clean cloth or low-pressure air.

6. Lightly coat the cutting edge of blade with grease.

Section 14-3.7. Hoisting Gloves

14-93. DESCRIPTION.

14-94. Hoisting Gloves (figure 14-11) are made of heavy leather and are worn by the aircrewmember during hoisting operations to protect hands from injury.

14-95. MODIFICATION.

14-96. There are no modifications for the Hoisting Gloves that are required or authorized.

14-97. MAINTENANCE.

14-98. INSPECTION. The Hoisting Gloves shall be subjected to a Place-In-Service Inspection and a Special Inspection. Refer to table 14-1 for required inspection cycles.

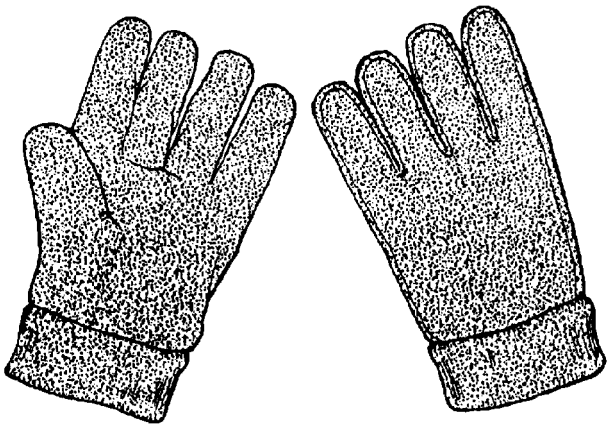

014011

Figure 14-11. Hoisting Gloves

14-99. Place-In-Service Inspection. The Place-In-Service Inspection shall be performed in accordance with paragraph 14-100, steps 1 thru 3.

14-100. Special Inspection. To perform the Special Inspection of the Hoisting Gloves, proceed as follows:

1. Inpsect for cuts, tears, fraying, and abrasions.

2. Inspect for dryness of leather.

3. Inspect for contaminants.

4. Repair in accordance with paragraph 14-101.

14-101. REPAIR. No repairs are authorized. Replace Hoisting Gloves as necessary.

Section 14-3.8. Wool Blanket

14-102. DESCRIPTION.

14-103. The Wool Blanket (figure 14-12) is approximately 5.5ft x 7ft shrink resistant and moth proof. The Wool Blanket is used for the treatment of hypothermia.

14-104. MODIFICATION.

14-105. There are no modifications for the Wool Blanket that are required or authorized.

14-106. MAINTENANCE.

14-107. INSPECTION. The Wool Blanket shall be subjected to a Place-In-Service Inspection and a Special Inspection. Refer to table 14-1 for required inspection cycles.

14-108. Place-In-Service Inspection. The Place-In-Service Inspection shall be performed in accordance with paragraph 14-109, steps 1 and 2.

14-109. Special Inspection. To perform the Special Inspection of the Wool Blanket, proceed as follows:

1. Inspect blanket for rips, deterioration or fraying.

2. Inspect for contaminants.

3. Repair in accordance with paragraph 14-110.

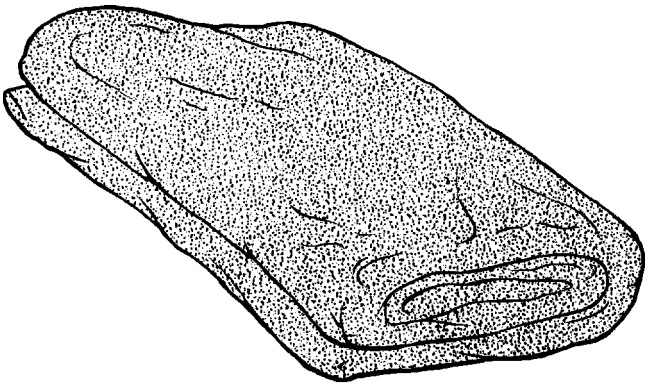

014012

Figure 14-12. Wool Blanket

14-110. REPAIR. Repairs are limited to cleaning. If contaminants cannot be removed by washing or dry-cleaning, replace Wool Blanket. For all other discrepancies, replace the Wool Blanket.

14-111. CLEANING.

NOTE

The Wool Blanket can be washed in a washing machine however; dry-cleaning is the optimum means of cleaning.

1. Washing machine instructions. Use only cool water to wash and rinse Wool blanket. Begin filling washing machine with cool water, add a mild laundry detergent, and ensure detergent is dissolved before placing blanket in washer.

2. Run washer for one full cycle. Remove blanket from washing machine and shake to remove wrinkles. Hang blanket to dry.

Section 14-3.9. Chemical Light Strap

14-112. DESCRIPTION.

14-113. The Chemical Light Strap (figure 14-13) is a lightweight double nylon strap with snaphooks used to attach chemical lights to rescue devices or hooks.

14-114. MODIFICATION.

14-115. There are no modifications for the Chemical Light Strap that are required or authorized.

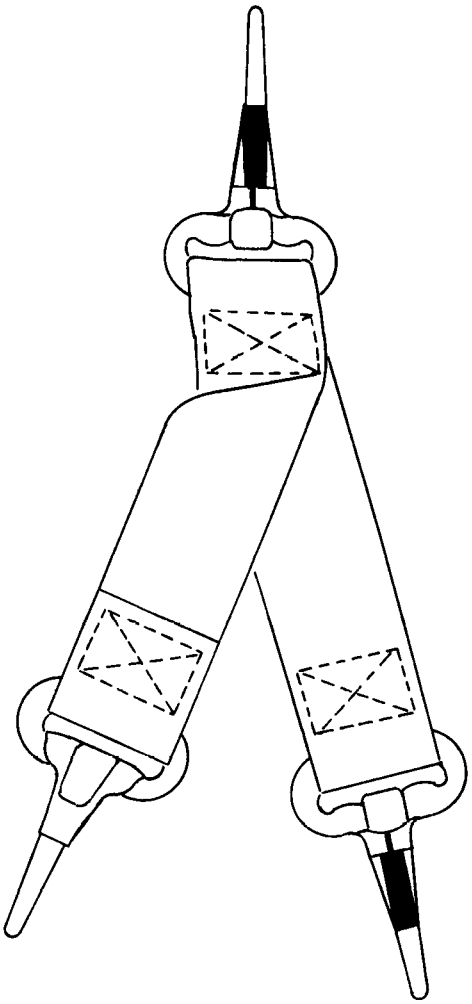

014013

Figure 14-13. Chemical Light Strap

14-116. MAINTENANCE.

14-117. INSPECTION. The Chemical Light Strap shall be subjected to a Place-In-Service Inspection and a Special Inspection. Refer to table 14-1 for required inspection cycles.

14-118. Place-In-Service Inspection. The Place-In-Service Inspection shall be performed in accordance with paragraph 14-119, steps 1 thru 4.

14-119. Special Inspection. To perform the Special Inspection of the Chemical Light Strap, proceed as follows:

1. Inspect for broken or frayed stitching.

2. Inspect for damaged webbing.

3. Inspect for contaminants.

4. Inspect snaphooks for ease of operation, deformities and corrosion.

5. Repair in accordance with paragraph 14-120.

6. Manufacture Light Strap in accordance with paragraph 14-121.

14-120. REPAIR. Repairs are limited to re-stitching of broken stitches. For all other discrepancies, the Chemical Light Strap shall be replaced.

14-121. FABRICATION. To make the Chemical Light Strap, proceed as follows:

Materials Required

Quantity	Description	Reference Number
10 inches	Webbing, Nylon, Yellow, 1-inch	NIIN 00-844-2358
	or	
	Webbing, Nylon, Sage Green, 1-inch	NIIN 00-261-8579
3	Hook, Snap, 1-inch	M43770/1-CWBC3 NIIN 01-PAC-9758
As Required	Thread, Nylon, Size E	V-T-295 NIIN 00-204-3884

1. Cut and sear a 10-inch length of nylon webbing. Reeve webbing through snaphook to mid-point and crossboxstitch in place with size E nylon thread.

2. Reeve one end of webbing 1-inch through snaphook so opening of snaphook faces the free end of webbing. Crossboxstitch in place with size E nylon thread. Repeat with remaining end of webbing and snaphook. Ensure the openings of both snaphooks face each other (figure 14-14).

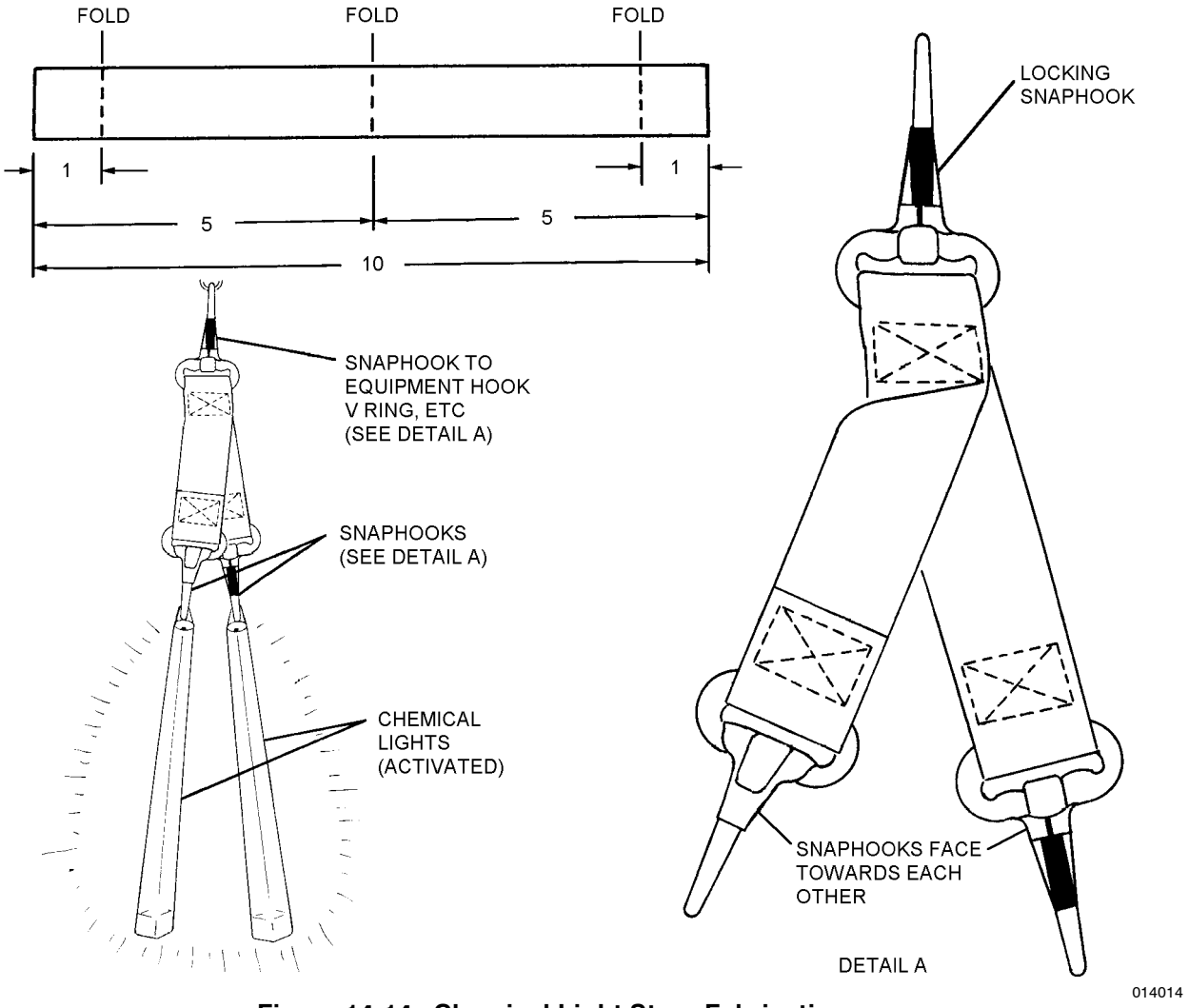

Figure 14-14. Chemical Light Strap Fabrication

Section 14-3.10. Crewmember's Aircraft Safety Belt

14-122. GENERAL.

14-123. Refer to Chapter 8 of this manual for inspection of Crewmember's Aircraft Safety Belt (figure 14-15).

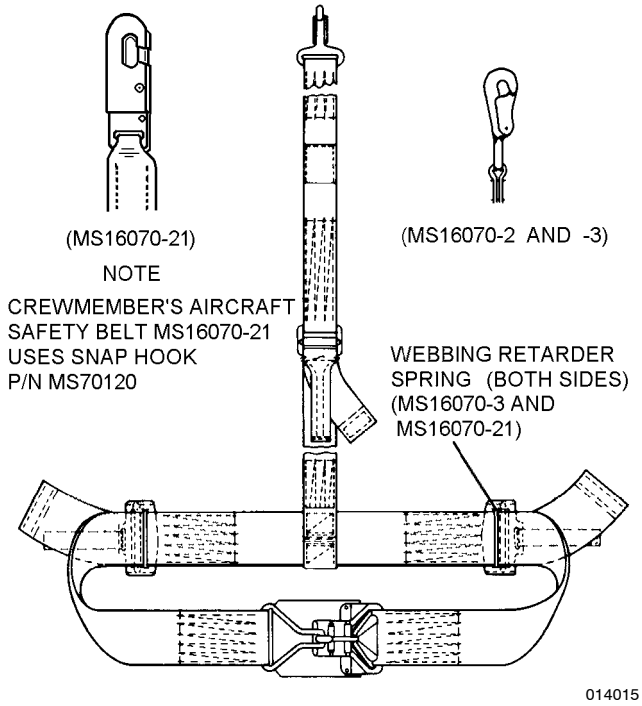

Figure 14-15. Crewmember's Aircraft Safety Belt (MS16070-2, MS16070-3, and MS16070-21)

Section 14-3.11. Chemical Lights

14-124. GENERAL.

14-125. Refer to Chapter 12 of this manual for inspection of Chemical Lights (figure 14-16).

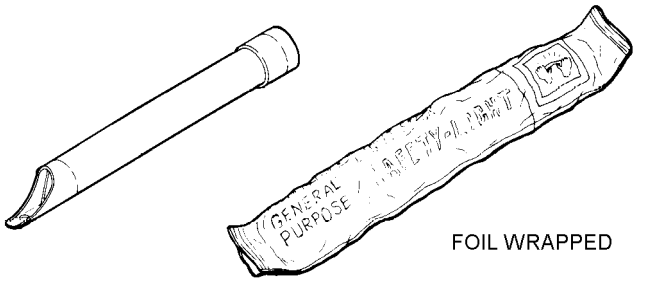

Figure 14-16. Chemical Light

Section 14-3.11.1 Electric Sea Marker Light, SDU-36/N

14-125.1 GENERAL.

NOTE

The Electric Sea Marker Light, (SDU-36/N), is no longer being manufactured. The Automatic Crew-Overboard Marker Light, section 14-3.11.2 is the replacement as authorized by SARMM.

All SDU-36/N's currently in service shall remain in service until no longer serviceable.

14-125.2 The Electric Sea Marker Light (figure 14-16A) is a droppable light which provides a visual reference to a survivor(s) position in the water. The light is omnidirectional and can be used where there is a possibility of fule contamination on the water surface. The light switch operates by an automatic gravity switch so that when upright (lens pointing up) the light is on, and when inverted the light is off.

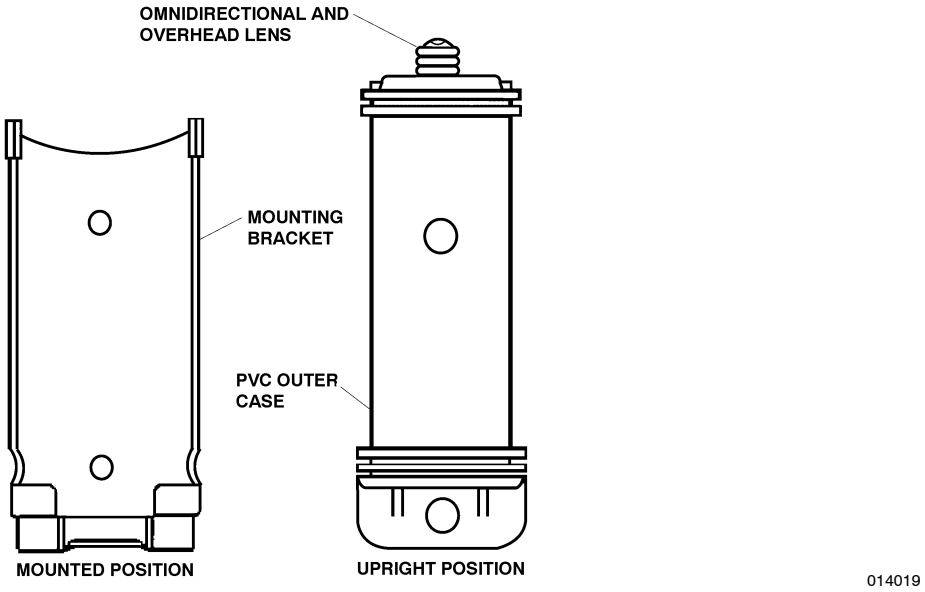

Figure 14-16A. Electric Sea Marker Light (SDU-36/N)

14-125.3 MAINTENANCE.

14-125.4 The SDU-36/N shall have a Place-In-Service inspection and Special inspection. Refer to table 14-1 for required inspection cycles.

NOTE

Inspection cycle of the SDU-36/N may be increased at the discretion of the squadron commander.

14-125.5 INSPECTION.

14-125.6 To perform the Special inspection of the SDU-36/N, proceed as follows:

1. Inspect for proper operation of light switch by turning light from the inverted position to the upright position. If light does not illuminate, replace battery and reinspect.

2. Inspect body of light for cracks and nicks.

3. Inspect battery compartment for corrosion, dirt and contamination.

4. Inspect O-rings for nicks, contamination or breakage.

5. Inspect light dome for tightness and security of attachment.

6. Ensure locking tabs are in the locked position.

7. Inspect light bracket for cracks, nicks and security of attachment.

8. Ensure light can be easily removed from bracket.

14-125.7 REPAIRS.

14-125.8 Repairs are limited to the removal of dirt and contamination and the replacement of the battery. All other discrepancies shall render the SDU-36/N non-RFI and it shall be replaced.

Section 14-3.11.2. Automatic Crew-Overboard Marker Light

14-125.9 DESCRIPTION.

14-125.10. The Automatic Crew-Overboard Marker Light is the replacement for the SDU-36/N, as authorized by SARMM. The Automatic Crew-Overboard Marker Light is a droppable strobe light which provides a visual reference to a survivor(s) position in the water. The light is omni-directional and can be used where there is a possibility of fuel contamination on the water surface. The light switch operates by an automatic gravity switch so that when upright (lens pointing up) the light is on, and when inverted the light is off. The Automatic Crew-Overboard Marker Light fits into the same bracket as the SDU-36/N.

14-125.11. MAINTENANCE.

14-125.12. The Automatic Crew-Overboard Marker Light shall have a Place-In-Service inspection and Special inspection. Refer to Table 14-1 for required inspection cycles.

14-125.13. PLACE-IN-SERVICE INSPECTION.

14-125.14. To perform the Place-In-Service inspection, proceed as follows:

NOTE

Discrepancies noted during the Place-In-Service inspection shall render the item non-RFI and shall be reported in accordance COMNAVAIRFORINST 4790.2 series.

1. Inspect light and bracket for damage. Inspect locking tabs for proper operation.

2. Check top cap O-ring for proper position and lightly lubricate with Christo-Lube, MCG-111.

3. Inspect outer O-ring for damage or breakage.

4. Ensure operating and maintenance instructions are legible.

5. Install battery with terminals towards open end of case (red wire to positive, black wire to negative).

6. Install top cap and secure locking tabs. Ensure they are properly seated in cap grooves.

7. Inspect for proper operation of light by turning light from the inverted position to the upright position. Light shall flash at a rate of 60 +/-10 flashes per minute. If light does not operate, check battery position and terminals or replace battery and reinspect.

8. Light is now ready for service.

14-125.15. Special Inspection.

14-125.16. To perform the Special inspection proceed as follows:

NOTE

Battery shall be replaced annually.

1. Inspect light and bracket for damage, locking tabs for proper operation and outer O-ring for damage or breakage.

2. Ensure operating and maintenance instructions are legible.

3. Remove top cap and inspect O-ring for proper position.

4. Remove battery and inspect battery compartment for corrosion, dirt and contamination.

5. Inspect light dome for tightness and security of attachment.

6. Re-install battery with terminals towards open end of case (red wire to positive, black wire to negative).

7. Lubricate top cap O-ring and install top cap and secure locking tabs. Ensure they are properly seated in cap grooves.

8. Inspect for proper operation of light by turning light from the inverted position to the upright position. Light shall flash at a rate of 60 +/-10 flashes per minute. If light does not operate, check battery position and terminals or replace battery and reinspect. If light fails to operate replace light.

9. Light is now ready for service.

14-125.17. REPAIRS.

14-125.18. Repairs are limited to the removal of dirt and contamination and the replacement of the battery. All other discrepancies shall render the Automatic Crew-Overboard Marker Light non-RFI and it shall be replaced.

Section 14-3.12. HGU-25 (Cranial)

14-126. GENERAL.

14-127. Refer to NAVAIR 13-1-6.7-3 for inspection of HGU-25 (figure 14-17).

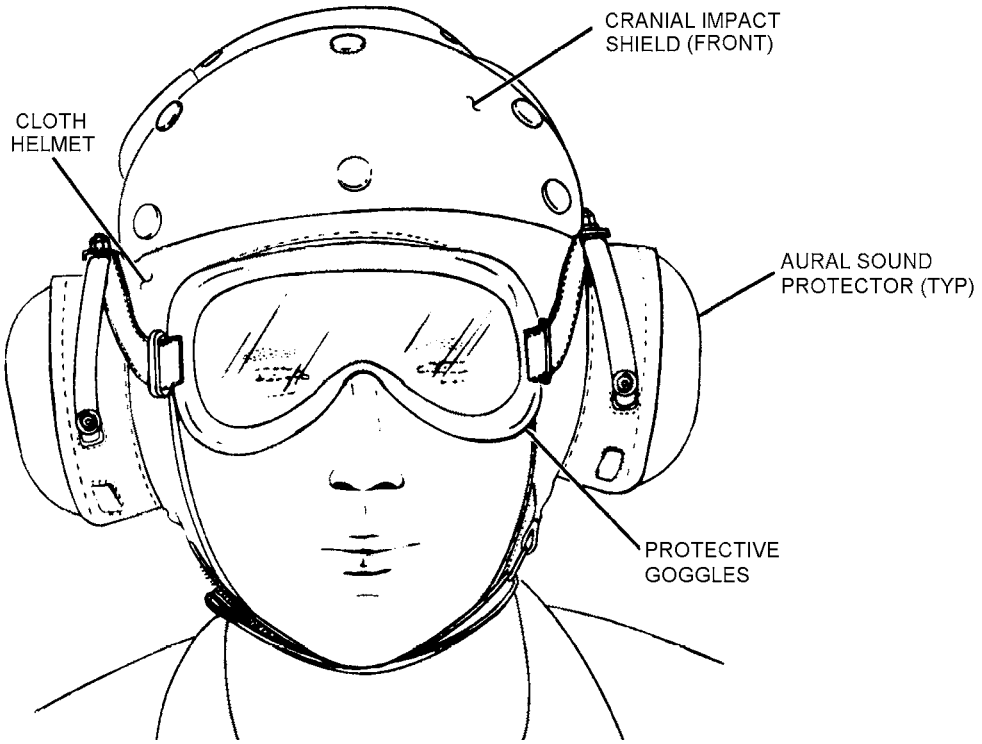

Figure 14-17. HGU-25 (Cranial)

Section 14-3.13. LPU-32/P or LPP-1/A Life Preserver Assembly

14-128. GENERAL.

14-129. Refer to NAVAIR 13-1-6.1-2 for inspection of LPU-32/P or LPP-1/A Life Preserver Assembly (figures 14-18 and 14-19).

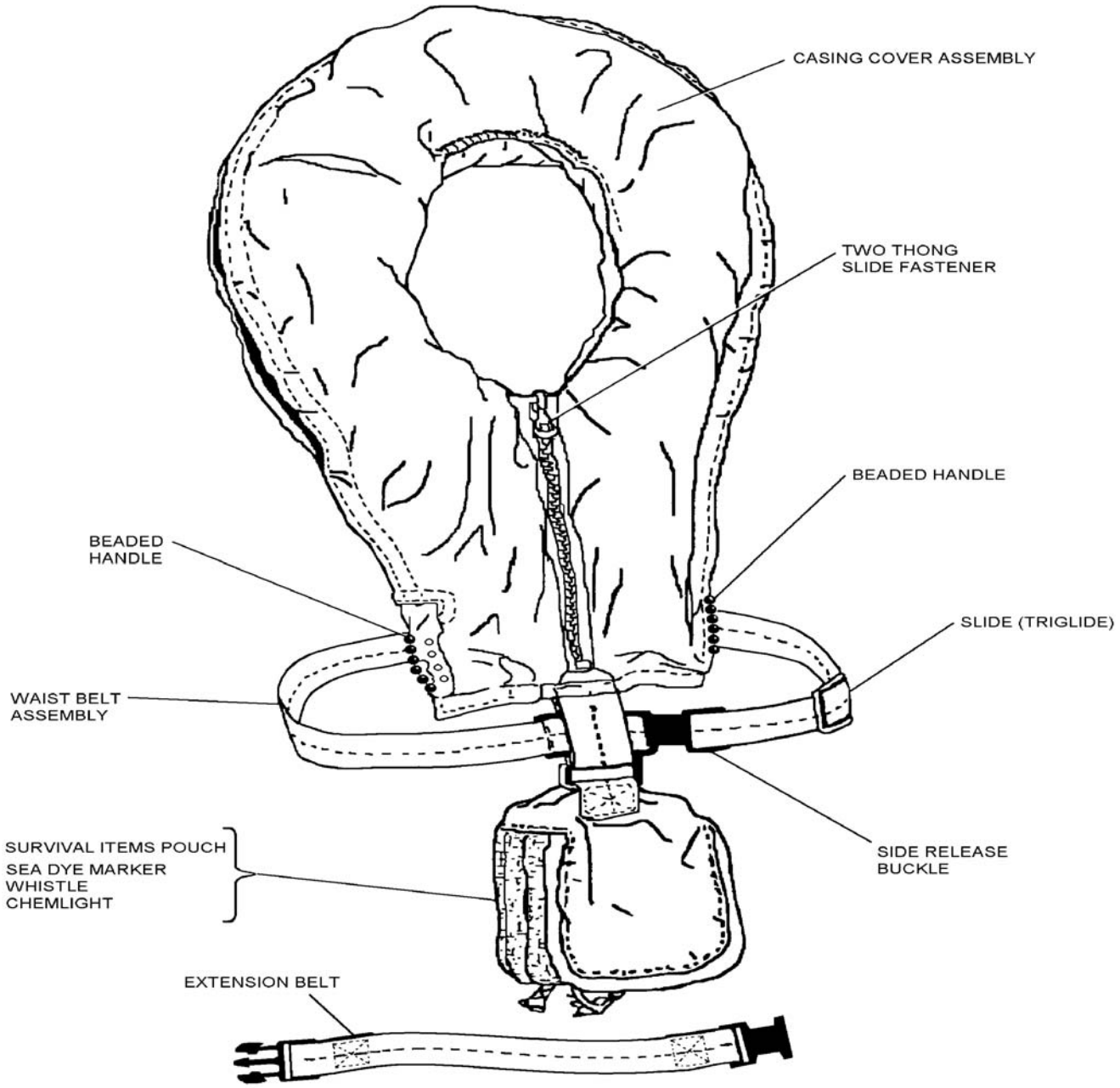

Figure 14-18. LPU-32/P Life Preserver Assembly, Parts Nomenclature

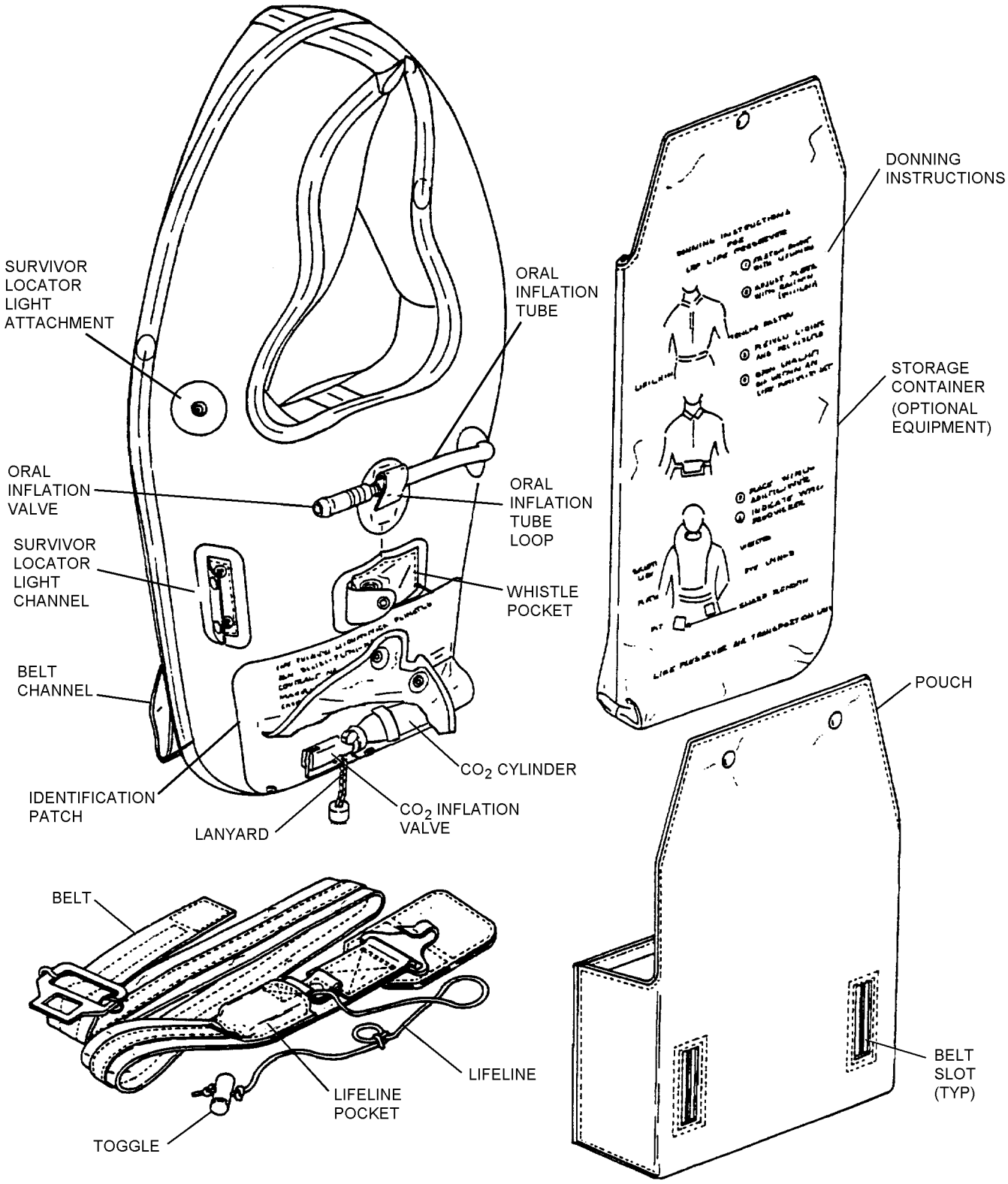

014019

Figure 14-19. LPP-1 and -1A Life Preserver Assemblies

Section 14-4. Rescue Strop

14-130. DESCRIPTION.

14-131. The Rescue Strop (figure 14-20), also known as the "Horse Collar or Rescue Sling" is used to assist the SAR Crewman when performing a rescue overwater or overland. The Rescue Strop is constructed of an International Orange nylon casing, closed-cell foam, stainless steel hardware and a retaining strap. Instructions and diagrams for use are located on the casing.

14-132. MODIFICATION.

14-133. Rescue Strop P/N 216 shall be updated as listed in table 14-2.

14-134. MAINTENANCE.

14-135. INSPECTION. The Rescue Strop shall be subjected to a Place-In-Service Inspection and a Special Inspection. Refer to table 14-1 for required inspection cycles.

14-136. Place-In-Service Inspection. The Place-In-Service Inspection shall be performed in accordance with paragraph 14-137, steps 1 thru 5, 7 and 9.

14-137. Special Inspection. To perform the Special Inspection of the Rescue Strop, proceed as follows:

NOTE

Fleet incorporation of ACC 605 changed the configuration of the assist handle. Life Saving Systems Corp. version of P/N 216-1 (modified rescue strop) the handle is manufactured as per figure 14-20, Ref A. Both are correct and both are identified as P/N 216-1.

1. Unsnap retaining straps and inspect for frayed, broken or missing stitches.

2. Inspect for wear or fraying of webbing straps and assist handle.

3. Inspect for rips, tears in fabric.

4. Inspect for contaminants.

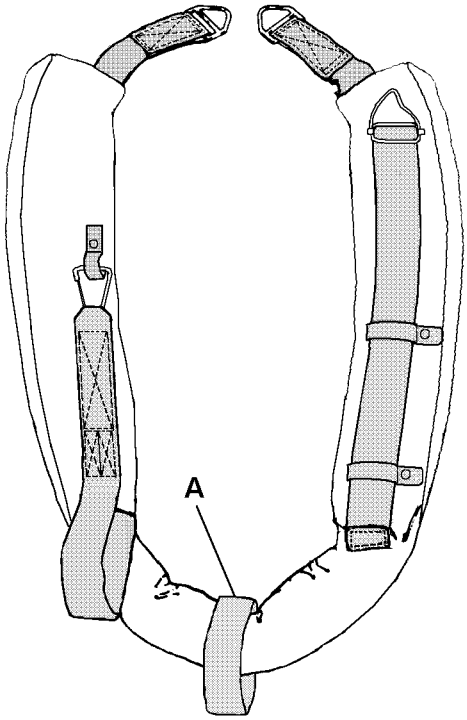

ACC 605 CONFIGURATION

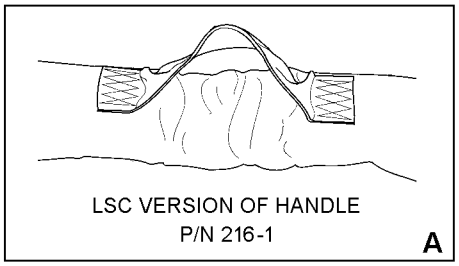

014020

Figure 14-20. Rescue Strop

Table 14-2. Rescue Strop Directives

Description of Modification	Application	Modification Code
Modification of arm retainer straps and assist handle	All Rescue Strops with P/N 216 only	ACC 605

5. Inspect hardware for security of attachment, corrosion, deformity, wear and, when applicable, ease of operation.

6. Repair as required in accordance with paragraph 14-138.

7. Inspect for proper marking. Refer paragraph 14-139.

8. Clean as required in accordance with paragraph 14-140.

9. Secure retaining straps.

a. Attach gated snaphook to webbing keeper and secure snap.

b. Adjust length of retainer strap with curved V-ring to fit in webbing keepers and secure snaps.

10. Perform Load Test (Conditional only) in accordance with paragraph 14-141.

14-138. REPAIR. Repairs are limited to the removal of corrosion and the replacement of broken stitches.

1. Repair of broken stitches on seam tape. No more than four stitching repairs.

2. Repairs of no more than three consecutive broken stitches on either "WW" stitch on hoisting webbing straps. No more than two repairs per "WW" stitch.

3. Lose or broken stitches on retainer strap ends. No more than three repairs.

4. Replace Rescue Strop as necessary.

14-139. MARKINGS. Verify markings on Rescue Strop to markings listed in table 14-3 and 14-4. Restore faded markings using a black permanent marker (NIIN 01-386-2212) or equivalent. Incorrect markings shall be marked out and the new information shall be stenciled or legibly written as close to the original location as possible.

14-140. CLEANING. To clean the Rescue Strop, proceed as follows:

Materials Required

Quantity	Description	Reference Number
As Required	Detergent, General Purpose	MIL-D-16791
As Required	Cloth, Lint-Free	MIL-C-85043

1. Remove corrosion in accordance with NAVAIR 01-1A-509 manual.

Table 14-3. Modified Rescue Strop Markings (P/N 216-1 [ACC 605])

Marking	Location	Letter Height
Rescue Strop	Inboard Left side	1 inch
Sling, Survivors, Rescue	Outboard Left side	1/4 inch
NSN 1680-01-347-4946	Outboard Left side	1/4 inch
Contract # [if applicable]	Outboard Left side	1/4 inch (Note 1)
64249 MFG. P/N 216-1	Outboard Left side	1/4 inch
Date of MFG [month/year]	Outboard Left side	1/4 inch

All markings shall be stamped, stenciled or re-marked with permanent black ink. Letter heights are approximate. Words enclosed with brackets under the marking column shall not be stenciled; they are to be regarded as information or instructions only.

SAR Aircrew procedures for using the Rescue Strop are addressed in the NTTP 3-50.1 Series manual.

Notes: 1. Rescue strops not having a contract number assigned are authorized for use.

Table 14-4. Rescue Strop Markings P/N 216-1 (LSC modified version)

Marking	Location	Letter Height
Rescue Strop	Outboard Left side	1 inch
Sling, Survivors, Rescue	Inboard Left side	1/4 inch
NSN 1680-01-347-4946	Inboard Left side	1/4 inch
Contract # [if applicable]	Inboard Left side	1/4 inch (Note 1)
Outboard Side	Outboard Right side	3/4 inch
Instructions [with arrows pointing inboard]	Right side top edge	3/4 inch
Lifesaving System Corp	Right side Inboard above diagrams	1/4 inch
P/N 216-1	Right side Inboard above diagrams	1/4 inch
Date of Mfg [month/year]	Right side Inboard above diagrams	1/4 inch
[5 Donning Instruction diagrams]	Right side Inboard	(Notes 2, 3)
[Warning with warning statement]	Right side Inboard below diagrams	1/4 inch

All markings shall be stamped, stenciled or re-marked with permanent black ink. Letter heights are approximate. Words enclosed with brackets under the marking column shall not be stenciled; they are to be regarded as information or instructions only.

Notes: 1. Rescue strops not having a contract number assigned are authorized for use.
2. SAR Aircrew procedures for using the rescue strop are addressed in the NTTP 3-50.1 Series Manual.
3. Missing or illegible drawings are cause for replacement of rescue strop.

2. Rinse Rescue Strop with clean fresh water.

3. Using a cloth and a mixture of clean water and detergent, scrub or wipe contaminated area until area is clean.

4. Rinse a second time with fresh water to remove soap and contaminants.

5. Hang to dry.

14-141. LOAD TEST (Conditional only). Perform a load test as follows:

1. Ensure Rescue Strop is completely dry.

2. Repair any broken stitches as outlined in paragraph 14-138.

NOTE

If webbing machine is not available, proceed to step 4 and perform subsequent steps. Webbing Testing Machines are normally located in the Airframes shop.

3. For Load Test with Webbing Testing Machine:

a. Place Rescue Strop in Webbing Testing Machine according to manufacturer's directions for the webbing machine.

b. Apply a load of 500 pounds at a rate of one inch per minute.

c. When 500 pounds has been reached, inspect for signs of damage.

d. Release load and remove Rescue Strop from machine.

4. For Load Test without Webbing Testing Machine:

a. Suspend either end of Rescue Strop from a stationary object.

b. Gradually apply a weight of 500 pounds over a 2-minute period to the free end of the Rescue Strop by the addition of weights.

c. When 500 pounds has been reached, inspect for signs of damage.

NOTE

Rescue Strops that show signs of damage from Load Test shall be removed from service.

d. Release load and remove Rescue Strop from stationary object.

Section 14-5. Quick Strop

14-142. DESCRIPTION.

WARNING

Deleted.

14-143. The Quick Strop (figure 14-21) provides for a quick and safe means of hoisting uninjured personnel. It has stainless steel hardware, a slide buckle that slides down the strop to prevent the survivor from slipping out, and an adjustable retainer strap that is stored in a zippered pocket on the rear of the strop.

14-144. MODIFICATION.

14-145. There are no modifications for the Quick Strop that are required or authorized.

14-146. MAINTENANCE.

14-147. INSPECTION. The Quick Strop shall be subjected to a Place-In-Service Inspection and a Special Inspection. Refer to table 14-1 for required inspection cycles.

14-148. Place-In-Service Inspection. The Place-In-Service Inspection shall be performed in accordance with paragraph 14-149, steps 1 through 5.

14-149. Special Inspection. To perform the Special Inspection of the Quick Strop, proceed as follows:

1. Inspect fabric and webbing for cuts, deterioration, abrasions, and contamination.

2. Inspect seams for proper adhesion and stitching.

3. Inspect retainer strap for security of attachment and wear. Stow retainer strap in pocket located on Quick Strop so that the snap hook is on top facing out the top of pocket. Secure velcro, snaps and zipper.

4. Inspect all hardware for corrosion, damage, wear, security of attachment and ease of operation.

5. Inspect for markings. Refer to table 14-5.

6. Repair in accordance with paragraph 14-150.

14-150. REPAIR. Repairs are limited to the removal of corrosion and cleaning. For all other discrepancies, the Quick Strop shall be replaced.

14-151. CLEANING. To clean the Quick Strop, proceed as follows:

Materials Required

Quantity	Description	Reference Number
As Required	Detergent, General Purpose	MIL-D-16791
As Required	Cloth, Lint-Free	MIL-C-85043

1. Remove corrosion in accordance with NAVAIR 01-1A-509 manual.

2. Rinse Quick Strop with clean fresh water.

3. Using a cloth and a mixture of clean water and detergent, scrub or wipe contaminated area until area is clean.

4. Rinse a second time with fresh water to remove soap and contaminants.

5. Hang to dry.

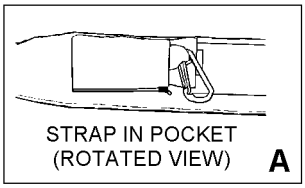

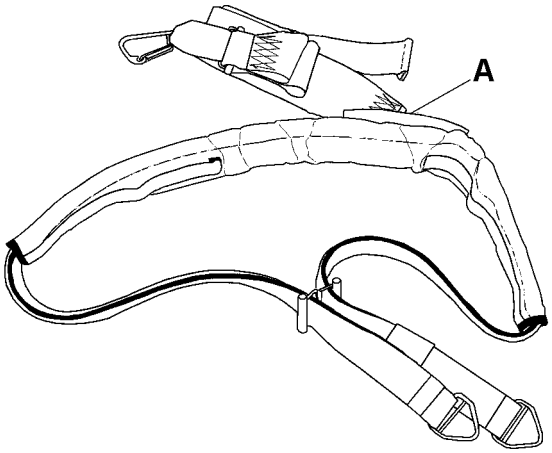

014021

Figure 14-21. Quick Strop, P/N 214

Table 14-5. Quick Strop Markings (P/N 214)

Marking	Location	Letter Height
Quick Strop	Inside center back	5/16 inch
LifeSaving System Corp	Inside above diagrams	1/4 inch
P/N 214	Inside above diagrams	1/4 inch
Date of Mfg [month/year]	Inside above diagrams	1/4 inch
[5 Donning Diagrams]	Inside center back	1/4 inch (Note 1)
[Warning statement]	Inside center back	1/4 inch

All markings shall be stamped, stenciled or re-marked with permanent black ink. Letter heights are approximate. Words enclosed with brackets under the marking column shall not be stenciled; they are to be regarded as information or instructions only.

SAR Aircrew procedures for using the Rescue Strop are addressed in the NTTP 3-50.1 Series manual.

Notes: 1. Missing or illegible diagrams are cause for replacement of Quick Strop.

Section 14-6. Cable Weight Cover

14-152. DESCRIPTION.

14-153. The Cable Weight Cover (figure 14-22) is a bright yellow, foam rubber filled waterproof, buoyant cover. The cover surrounds the hoist cylinder metal weight to protect the aircrewman and/or survivor from serious injury if they are accidentally hit with the cable weight.

14-154. MODIFICATION.

14-155. There are no modifications for the Cable Weight Cover that are required or authorized.

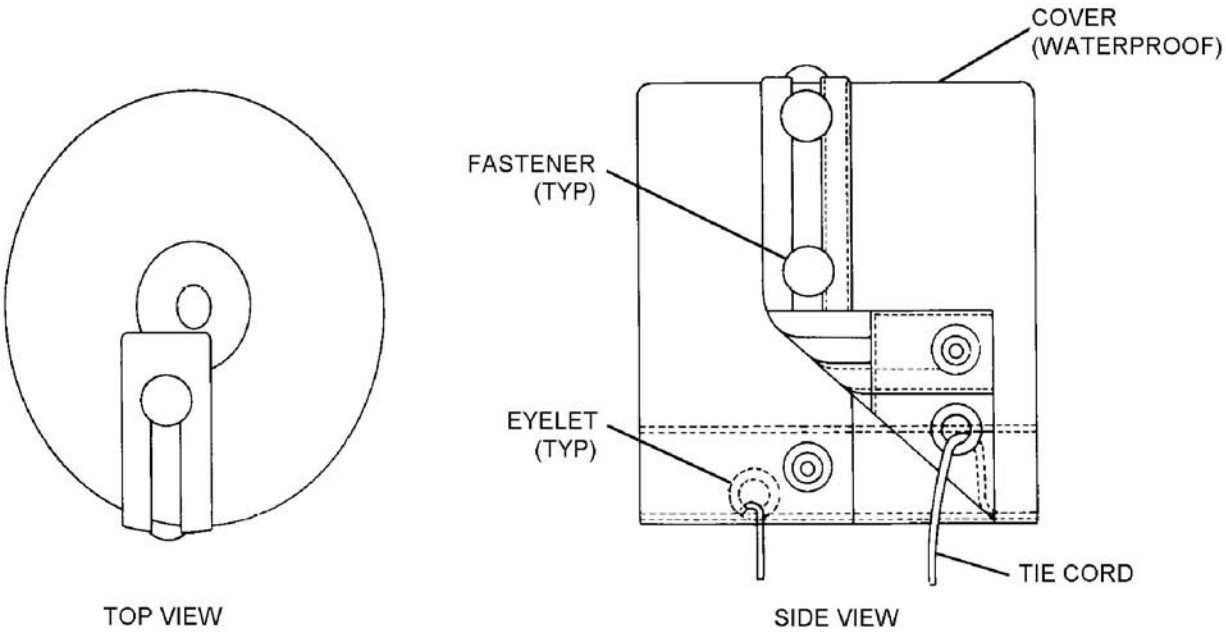

Figure 14-22. Cable Weight Cover, Parts Nomenclature

14-156. MAINTENANCE.

14-157. INSPECTION. The Cable Weight Cover shall be subjected to a Place-In-Service Inspection and a Special Inspection. Refer to table 14-1 for required inspection cycles.

14-158. Place-In-Service Inspection. The Place-In-Service Inspection shall be performed in accordance with paragraph 14-159, steps 1 thru 4 and 7.

14-159. Special Inspection. To perform the Special Inspection of the Cable Weight Cover, proceed as follows:

1. Inspect for frayed, broken or missing stitches.

2. Inspect for contaminants.

3. Inspect for rips and tears.

4. Inspect hardware for security of attachment and corrosion.

5. Repair in accordance with paragraph 14-160.

6. Clean in accordance with paragraph 14-161.

7. Inspect for proper markings, refer to paragraph 14-162.

14-160. REPAIR. Repair of the Cable Weight Cover shall consist of stitching of broken or fraying stitches, replacement of broken or corroded snap fasteners and replacement of faded markings. Unlimited repairs are authorized, however replace Cable Weight Cover when no longer practical to repair.

14-161. CLEANING. To clean the Cable Weight Cover, proceed as follows:

Materials Required

Quantity	Description	Reference Number
As Required	Detergent, General Purpose	MIL-D-16791
As Required	Cloth, Lint-Free	MIL-C-85043

1. Using a cloth and a mixture of clean water and detergent, scrub or wipe contaminated area until area is clean.

2. Rinse with fresh water to remove soap and contaminants.

3. Hang to dry.

14-162. MARKINGS. Verify markings on Cable Weight Cover to markings in table 14-6.

Table 14-6. Cable Weight Cover Markings

Marking	Location	Letter Height
COVER, CABLE WEIGHT, RESCUE EQUIPMENT STOCK NO. [1680-00-511-2714] PART NO. [MIL-R-8592-4] CONTRACT NO. [stencil applicable number] MANUFACTURER [stencil name of manufacturer] MFD DATE [stencil month and year of manufacture]	Top of cover	1/4 Inch

Notes: 1. All markings shall be stamped or stencilled with waterproof black ink. All words enclosed by brackets, in the column headed MARKING, shall not be stencilled on the equipment; they are to be regarded as instructions only.

Section 14-7. Trail Line Assembly

14-163. DESCRIPTION.

14-164. The Trail Line Assembly (figure 14-23) is used to control and guide rescue equipment to and from the desired location during helicopter operations. It contains 120 ft of 3/8-inch polyethylene or polypropylene rope, a weak link, one 5 pound shot bag, "V" strap and trail line gloves.

14-165. MODIFICATION.

14-166. There are no modifications for the Trail Line Assembly that are required or authorized.

14-167. MAINTENANCE.

14-168. INSPECTION. The Trail Line Assembly shall be subjected to a Place-In-Service Inspection and a Special Inspection. Refer to table 14-1 for required inspection cycles.

14-169. Place-In-Service Inspection. The Place-In-Service Inspection shall be performed in accordance with paragraph 14-170, steps 1 thru 8 and 11.

14-170. Special Inspection. To perform the Special Inspection of the Trail Line Assembly, proceed as follows:

1. Inspect for required equipment, refer to Table 14-1.

2. Inspect for tears, cuts, holes and fraying of material.

3. Inspect for broken, missing or frayed stitching.

4. Inspect for contaminants.

5. Inspect all hardware for proper operation, corrosion and security of attachment.

6. Inspect hesitator loops for fraying and security of attachment.

7. Remove rope and inspect for broken strands, cracks and fraying.

8. Inspect Weak Link for correct tying and tacking.

NOTE

Weak Link on New Trail Line assemblies will have a zigzag stitch for tacking. This is acceptable. If zigzag stitching is loose or broken, replace Weak Link and tacking.

9. Repair in accordance with paragraph 14-171.

10. Clean in accordance with paragraph 14-172.

11. Pack in accordance with paragraph 14-173.

14-171. REPAIR. Repairs are limited to the removal of corrosion, stitching of broken stitches, cleaning, replacement of components and replacement of Weak Link. Unlimited sewing repairs are authorized on the Trail Line Pack however replace when no longer practical to repair. Damaged or contaminated Weak Link, rope or V-strap shall be replaced. Refer to paragraph 14-174 for Weak Link replacement.

14-172. CLEANING. To clean the Trail Line Assembly, proceed as follows:

Materials Required

Quantity	Description	Reference Number
As Required	Detergent, General Purpose	MIL-D-16791
As Required	Cloth, Lint-Free	MIL-C-85043

1. Remove corrosion in accordance with NAVAIR 01-1A-509 manual.

2. Rinse Trail Line Assembly with clean fresh water.

3. Using a cloth and a mixture of clean water and detergent, scrub or wipe contaminated area until area is clean.

4. Rinse a second time with fresh water to remove soap and contaminants.

5. Hang to dry.

14-173. PACKING. Pack Trail Line Assembly as follows:

1. Stow rope in hesitator loops as shown in figure 14-23.

2. Stow V-strap into designated pocket.

3. Stow Line Handling Gloves into designated pocket.

4. Roll pack from bottom and secure.

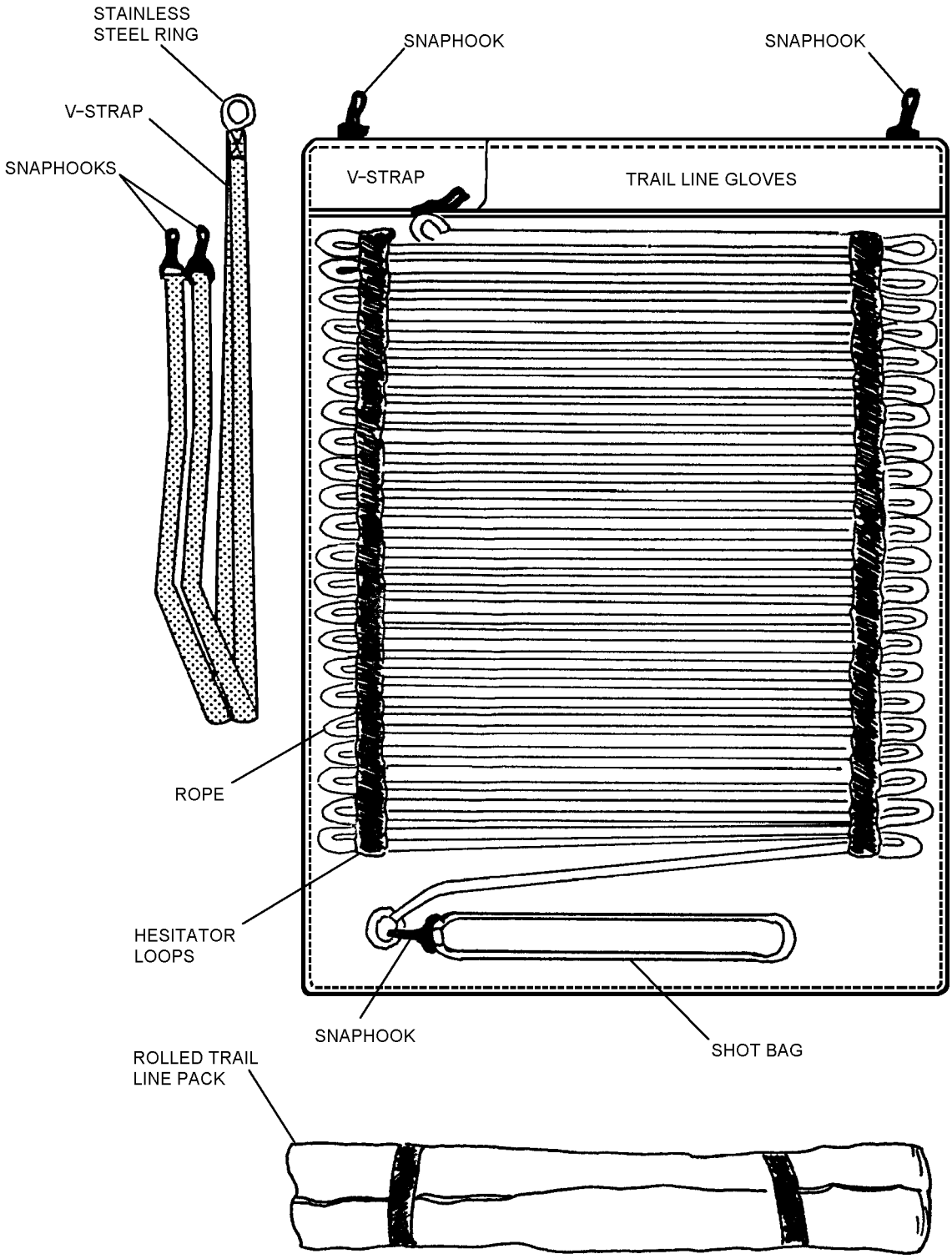

014023

Figure 14-23. Trail Line Assembly

14-174. WEAK LINK REPLACEMENT. Replace the Weak Link as follows:

Materials Required

Quantity	Description	Reference Number
8-1/2 inch	Cord, Nylon, Type III (natural)	MIL-C-5040 NIIN 00-240-2146
	or	
	Type III (red)	NIIN 00-240-2147
As Required	Thread, Nylon, Size FF, Type I,	V-T-295 NIIN 00-227-1244

1. Remove old weak link and discard.

2. Remove inner strands of the 8 1/2 inch Type III nylon cord. Sear ends.

3. Route the cord two turns through the ring and snap-hook, (figure 14-24). Tie ends with a binders knot leaving approximately 1-inch of free end.

4. Tack the free ends of the binders knot in two places with a single turn of waxed FF thread. Tack the binders knot at center of knot with a single turn of waxed FF thread. (figure 14-24). All tacking shall be tied using a surgeon's knot followed by a square knot.

14-175. WEAK LINK FABRICATION (Inland SAR Only). Fabricate the Weak Link as follows:

CAUTION

The fabrication of Weak Link is for use with Rappelling Ropes Only. Rappelling rope carabiner will be attached to the Weak Link. Do not attach carabiner directly to the V-strap ring.

Materials Required

Quantity	Description	Reference Number
1	V-Strap	P/N 223 NIIN 01-242-1031
10-inches	Cord, Nylon, Type III (Natural)	MIL-C-5040 NIIN 00-240-2146
	or	
	Type III (red)	NIIN 00-240-2147
As Required	Thread, Nylon, Size FF, Type I	V-T-295 NIIN 00-227-1244

1. Remove inner strands of a 10-inch length of nylon cord. Sear ends.

2. Route the cord through the V-strap ring and tie off ends with a binders knot forming a 2-inch loop and approximately 1-inch of free ends.

3. Tack the free ends of the binders knot in two places with a single turn of waxed FF thread. Tack the binders knot at center of knot with a single turn of waxed FF thread. (figure 14-24). All tacking shall be tied using a surgeon's knot followed by a square knot.

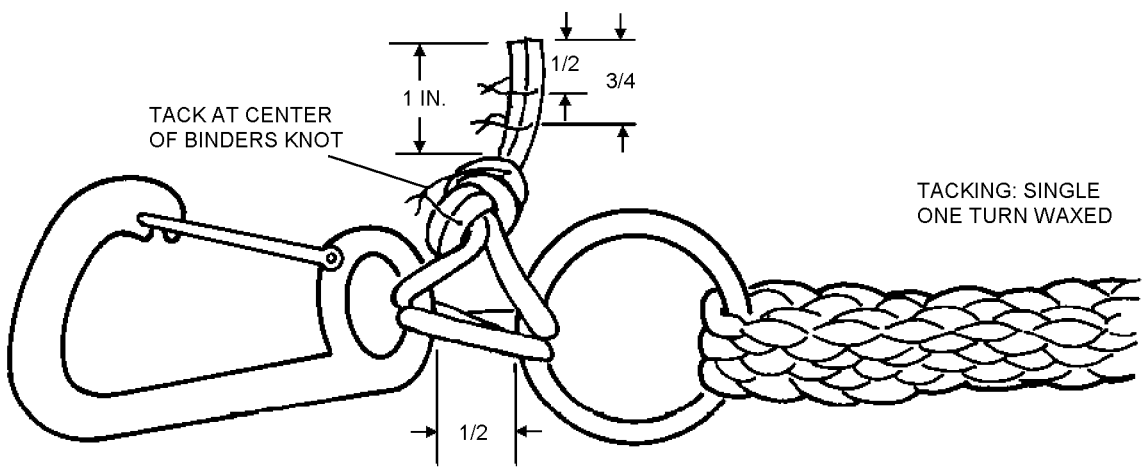

Figure 14-24. Weak Link Assembly

Section 14-7.1. 70-Foot Trail Line Assembly (For Training Only)

14-175.1 GENERAL.

14-175.2 The 70-Foot Trail Line Assembly is designed and manufactured the same as the 120-Foot Trail Line Assembly but uses a 70-foot line.

WARNING

The 70-Foot Trail Line Assembly shall be used for training only and shall be marked for training only.

14-175.3 MAINTENANCE.

14-175.4 All maintenance and inspections shall be conducted in accordance with table 14-1 and paragraph 14-167.

THIS PAGE INTENTIONALLY LEFT BLANK.

Section 14-8. MEDEVAC Litter

14-176. DESCRIPTION.

14-177. The MEDEVAC Litter (figure 14-25) is designed for in water, shipboard, mountain, and other restricted area rescues. It is an alternative to the Stokes Litter. It has a low, narrow profile, flotation pads, two carrying harnesses, a carrying case and can be folded for easy transporting. It weighs approximately 40 pounds and measures 80 inches long and 16 1/2 inches wide.

14-178. MODIFICATION.

14-179. There are no modifications for the MEDEVAC Litter that are required or authorized.

14-181. INSPECTION. The MEDEVAC Litter shall be subjected to a Place-In-Service Inspection and a Special Inspection. Refer to table 14-1 for required inspection cycles.

14-182. Place-In-Service Inspection. The Place-In-Service Inspection shall be performed in accordance with paragraph 14-183, steps 1b-d, 2a-d, 3a-g, and 4a-e.

14-183. Special Inspection. To perform the Special Inspection of the MEDEVAC Litter, proceed as follows:

NOTE

All components of the MEDEVAC Litter shall be serialized with the serial number from the frame assembly. Re-serialize new components as necessary.

1. Frame assembly:

a. Inspect metal and welds for cracks, bends, corrosion.

b. Inspect bolts for security of attachment.

c. Inspect frame locking couplers for cracks, bends, corrosion, and ease of operation. Push in coupler locking pins and look inside cavity with flashlight to check for corrosion. Lubricate couplers in accordance with paragraph 14-185, step 6.

d. Inspect serial number tag for wear and readability.

e. Clean in accordance with paragraph 14-185.

f. Repair or replace in accordance with paragraph 14-184.

2. Litter mounted cables and Vertical hoisting sling:

a. Inspect swaging sleeves for corrosion on sides and ends.

NOTE

Kings Point Inc. slings/cables will have three crimps on swaging sleeves. LifeSaving Systems Corp. slings/cables may have three crimps on swaging sleeves or a single 1/2-inch crimp. Both are acceptable.

b. Inspect cables for corrosion, worn or broken wires at swag sleeves and along cable.

c. Inspect lifting rings for security, wear, damage and deformity.

d. Serialize vertical hoisting sling, with serial number from frame assembly.

e. Verify serial number during Special Inspection.

f. Repair or replace in accordance with paragraph 14-184.

3. Nylon frame cover, Flotation pads and all webbing restraint straps and pads:

a. Inspect for cuts, tears, broken or separated stitches, fraying and security of attachment.

b. Inspect for contaminants.

c. Inspect all adjustable fittings for cracks, corrosion and ease of operation.

d. Inspect slide fasteners for broken teeth and ease of operation.

e. Inspect for deterioration of flotation pads.

f. Inspect all webbing restraint straps for security of attachment, cuts, tears, broken stitches.

g. Inspect patient restraint straps for double stop tabs and proper location of straps, chest (gray/silver), waist (red), thigh (blue), and foot (green).

h. Clean in accordance with paragraph 14-185.

i. Repair or replace in accordance with para 14-184.

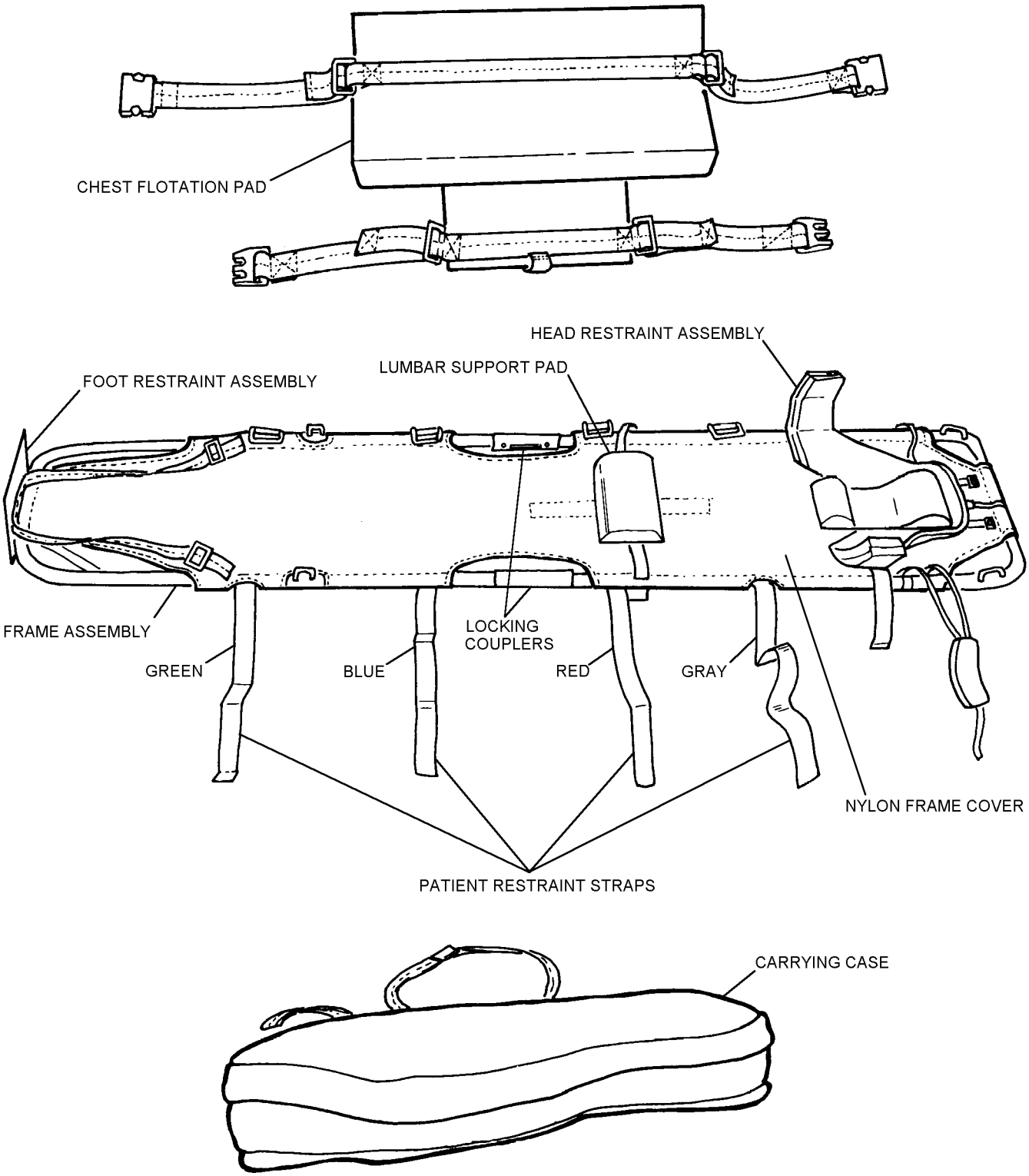

014025

Figure 14-25. MEDEVAC Litter and Components

4. Inspect Carrying Case and adjustable harness (2 ea):

a. Inspect webbing for cuts, tears, broken or separated stitches, fraying and security of attachment.

b. Inspect adjustable fittings for cracks, corrosion and ease of operation.

c. Inspect for contaminants.

d. Inspect slide fastener for broken teeth and ease of operation.

e. Serialize carrying case and harness with serial number from frame assembly.

f. Verify serial numbers during Special Inspection.

g. Repair or replace in accordance with paragraph 14-184.

h. Clean in accordance with paragraph 14-185.

5. Perform a Load Test (Conditional Only) in accordance with paragraph 14-189.

14-184. REPAIR. To repair the MEDEVAC litter, proceed as follows:

Materials Required

Quantity	Description	Reference Number
As Required	Thread, Nylon, Type II, Class A, Size E (Green or Neutral)	V-T-295 NIIN 00-616-0079
As Required	Cloth, Duck, Orange, Type I (or equivalent)	MIL-C-7219 NIIN 00-445-7825
As Required	Lubricating Oil	VV-L-800 NIIN 00-458-0075
As Required	Cloth, Cleaning	MIL-C-85043 NIIN 00-044-9281

1. Litter mounted cables and Vertical hoisting sling:

a. No repairs are authorized to the Vertical hoisting sling. Replace as necessary.

b. Litter-mounted cables shall be replaced by the manufacture.

NOTE

If the litter-mounted hoisting cables are damaged, either the frame must be replaced or the litter-mounted cables may be replaced by the manufacture. Shipping and manufacture repair costs shall be the responsibility of the command.

Lifesaving Systems Corp.
220 Elsberry Rd
Apollo Beach, FL 33572-228
813-645-2748

2. Frame Assembly:

a. If any cracks, bends, signs of severe or internal corrosion are evident on frame assembly or weld areas, replace frame assembly.

b. Remove surface corrosion in accordance with NAVAIR 01-1A-509.

c. Repairs are confined to the replacement of common nuts and bolts.

d. Lubricate couplings in accordance with paragraph 14-185, step 6.

3. Nylon Frame Cover, chest and bottom flotation assemblies and restraint straps:

a. Tears or fraying of components more than two inches requires replacement. Tears or fraying less than two inches can be patched. No more than three patches allowed on any one component.

b. No more than three stitching repairs allowed on either the frame cover or chest and bottom flotation assemblies.

c. Repairs to patient restraint straps are limited to two stitching repairs per strap. No more than two broken stitches are allowed per repair.

Replacement of patient restraint straps requires a complete cover replacement. Refer to paragraph 14-186 for replacement procedures for frame cover.

4. Carrying Case and adjustable harness:

a. Repair tears, fraying, broken stitches on carrying case. Unlimited repairs are authorized on carrying case. Replace case when no longer practical to repair.

b. No more than four stitching repairs allowed on harness assembly.

14-185. CLEANING. To clean the MEDEVAC Litter, proceed as follows:

Materials Required

Quantity	Description	Reference Number
As Required	Detergent, General Purpose	MIL-D-16791
As Required	Cloth, Lint-Free	MIL-C-85043
As Required	Silicone Lubricant	MIL-S-8660

1. Remove corrosion in accordance with NAVAIR 01-1A-509 manual.

2. Rinse MEDEVAC Litter with clean water.

3. Using a cloth and a mixture of clean water and detergent, scrub or wipe contaminated area until area is clean.

4. Rinse a second time with fresh water to remove soap and contaminants.

5. Hang to dry.

CAUTION

When applying silicone lubricant to metal surfaces, avoid lubricant contact to nylon material. Re-clean as necessary.

6. Lubricate coupler pins with silicone after MEDEVAC Litter is completely dry. Push in coupler locking pins and apply silicone lubricant inside locking pin cavity. Wipe off excess with cloth.

14-186. FRAME COVER REPLACEMENT. Replace frame cover as follows:

NOTE

Refer to table 14-1 for ordering of frame cover.

14-187. Removal of Nylon Frame Cover.

1. Assemble MEDEVAC Litter.

2. Turn MEDEVAC Litter so that skid rails are facing up.

3. Remove bottom flotation pad.

4. Disconnect all nylon frame cover retaining straps.

5. Ensure all personnel retaining straps are disconnected and spread out.

6. Remove all cross connecter bracket retaining self locking nuts and bolts.

7. Disconnect and remove coupler then fold litter so nylon cover can be removed.

14-188. Installation of Nylon Frame Cover.

1. Fold litter frame assembly and position nylon frame cover on frame.

2. Unfold litter and install locking couplers.

3. Turn MEDEVAC Litter so that skid rails are facing up.

4. Install all cross connecter bracket retaining self locking nuts and bolts.

5. Connect all nylon frame cover retaining straps.

6. Install bottom flotation pad.

7. Fold and stow litter and accessories in carrying case.

14-189. LOAD TEST. (Conditional Only) To perform Load Test on the MEDEVAC Litter, Hoisting Sling and Vertical Hoisting Sling, proceed as follows:

14-190. MEDEVAC Litter and Hoisting Sling Load Test.

1. Ensure litter is completely dry.

2. Inspect litter in accordance with paragraph 14-183, steps 1-3.

3. Place a 500-pound load evenly distributed in the MEDEVAC Litter using sand bags or similar weight.

4. Attach hoisting sling assembly (P/N 1554AS201-1) to MEDEVAC Litter. Short ends (red) to head end of litter and long ends (white) to feet end of litter.

5. Suspend litter a few inches off deck for 30 minutes. While suspended, inspect litter and hoisting sling for signs of damage.

6. Lower litter onto deck and remove weight. Repair or replace litter or slings as necessary.

14-191. Vertical Hoisting Sling Load Test.

1. Remove lumbar support pad from back side of litter and attach 500-pounds to the first brace (head end), bolt to frame on back side of litter.

2. Suspend litter a few inches off deck for 30 minutes. While suspended, inspect litter and vertical hoisting sling for signs of damage.

3. Lower litter onto deck and remove weight. Repair or replace litter or vertical hoisting sling as necessary.

Section 14-9. Rescue Litter

14-192. DESCRIPTION.

14-193. The Rescue Litter (figure 14-26), also known as the Stokes Litter, is used to immobilize a survivor who has sustained back injuries. The Rescue Litter accommodates one survivor and can be used over land or over water. There are two styles of Rescue Litters authorized for use, rigid and foldable. A flotation assembly shall be installed onto the Rescue Litter for over water rescues. Refer to table 14-1 for procurement information.

14-194. MODIFICATION.

14-195. There are no modifications for the Rescue Litter that are required or authorized.

14-196. MAINTENANCE.

14-197. INSPECTION. The Rescue Litter shall be subjected to a Place-In-Service Inspection and a Special Inspection. Refer to table 14-1 for required inspection cycles.

14-198. Place-In-Service Inspection. The Place-In-Service Inspection shall be performed in accordance with paragraph 14-199, steps 1a-h, 2a-b, and 3a-d.

14-199. Special Inspection. To perform the Special Inspection of the Rescue Litter, proceed as follows:

1. Frame assembly:

a. Inspect metal frame and welds for cracks, bends, corrosion.

b. Inspect any bolts for security of attachment.

c. (Foldable Litter) Inspect frame locking couplers for cracks, bends, corrosion, and ease of operation. Push in coupler locking pins and look inside cavity with flashlight to check for corrosion. Lubricate couplers in accordance with paragraph 14-201, step 6.

d. Inspect all patient restraint straps for security of attachment, cuts, tears, broken stitches.

e. Inspect patient restraint straps for double stop tabs and proper location of straps, chest (gray/silver), waist (red), thigh (blue), and foot (green).

f. Inspect adjustable fittings for proper operation, cracks and corrosion.

g. Inspect for the presence of red and white reflective tape.

h. Inspect serial number tag for wear and readability.

i. Clean in accordance with paragraph 14-201.

j. Repair or replace in accordance with paragraph 14-200.

2. Plastic netting/metal basket:

a. Inspect for broken netting or wire.

b. Inspect for contaminants.

c. Repair or replace in accordance with paragraph 14-200.

d. Clean in accordance with paragraph 14-201.

3. Flotation Assembly:

a. Inspect covers and webbing for cuts, tears, broken or separated stitches, fraying and security of attachment.

b. Inspect for contaminants.

c. Inspect for deterioration of flotation pads.

d. Inspect all plastic FASTEX buckles for proper operation.

e. Repair or replace in accordance with paragraph 14-200.

f. Clean in accordance with paragraph 14-201.

14-200. REPAIR. Repair the Rescue Litter as follows:

1. Frame Assembly:

a. If any cracks, bends, signs of severe or internal corrosion are evident on frame assembly or weld areas, replace rescue litter.

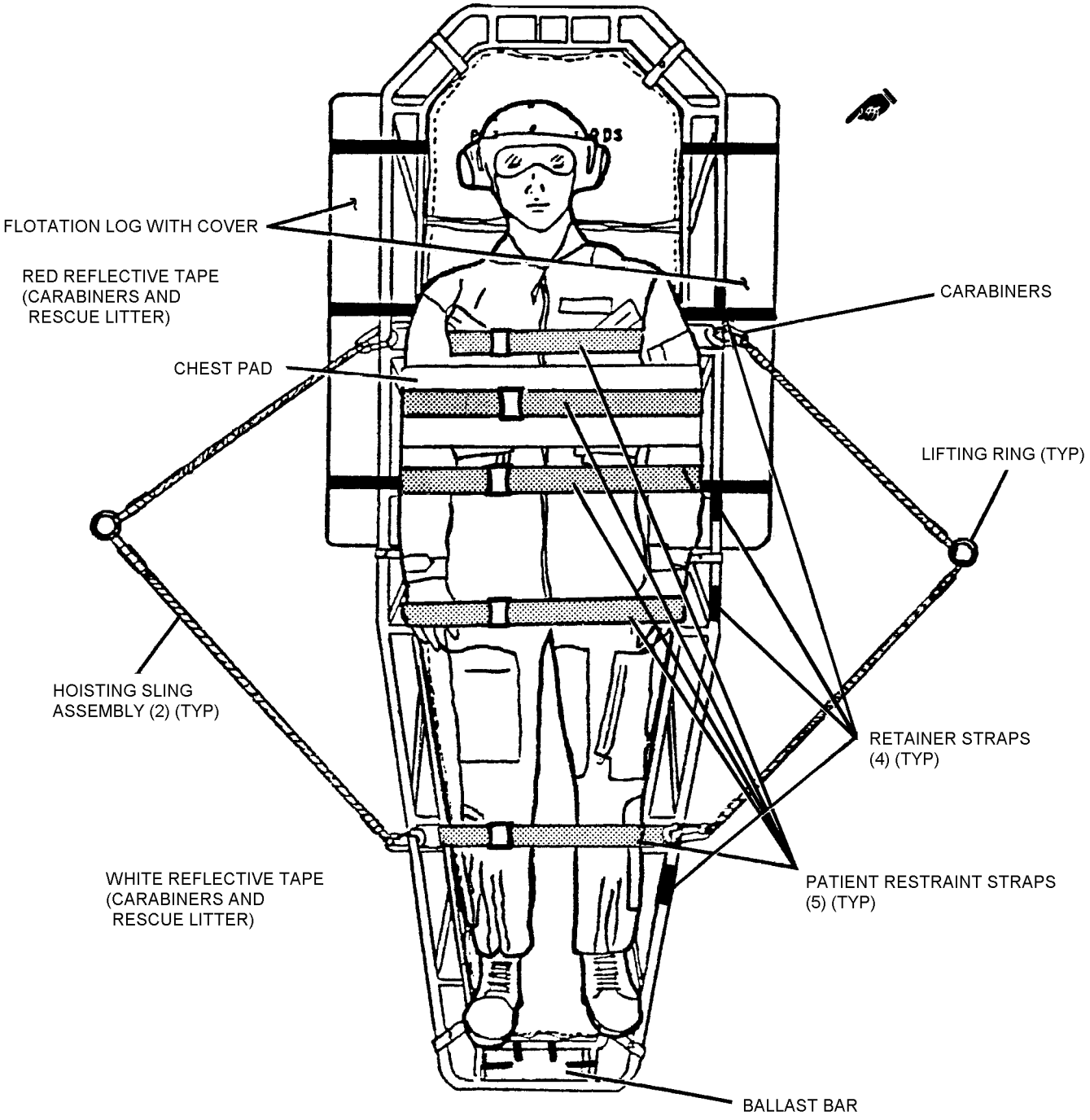

Figure 14-26. Rescue Litter Assembly

b. Remove surface corrosion in accordance with NAVAIR 01-1A-509.

c. Repairs are confined to the replacement of any common nuts and bolts.

d. Lubricate couplings in accordance with paragraph 14-201, step 6.

2. Deleted

3. Flotation Assembly:

a. Repairs are limited to the replacement of flotation components. Refer to table 14-1 for procurement of components.

14-201. CLEANING. To clean the Rescue Litter, proceed as follows:

Materials Required

Quantity	Description	Reference Number
As Required	Detergent, General Purpose	MIL-D-16791
As Required	Cloth, Lint-Free	MIL-C-85043
As Required	Silicone Lubricant	MIL-S-8660

1. Remove corrosion in accordance with NAVAIR 01-1A-509 manual.

2. Rinse Rescue Litter with clean water.

3. Using a cloth and a mixture of clean water and detergent, scrub or wipe contaminated area until area is clean.

4. Rinse a second time with fresh water to remove soap and contaminants.

5. Hang to dry.

CAUTION

When applying silicone lubricant to metal surfaces, avoid lubricant contact to nylon and webbing material. Re-clean as necessary.

6. Lubricate coupler pins with silicone after Rescue Litter is completely dry. Push in coupler locking pins and apply silicone lubricant inside locking pin cavity. Wipe off excess with cloth.

Section 14-10. Rescue Net

14-202. DESCRIPTION.

14-203. The Rescue Net (figure 14-27) is collapsible and buoyant designed to serve as a rescue device for one or two survivors. The addition of flotation ensure that it is safe for use in an open water environment. The Rescue Net may also be used to ferry or pick up cargo.

14-204. MODIFICATION.

14-205. There are no modifications for the Rescue Net that are required or authorized.

14-206. MAINTENANCE.

14-207. INSPECTION. The Rescue Net shall be subjected to a Place-In-Service Inspection and a Special Inspection. Refer to table 14-1 for required inspection cycles.

14-208. Place-In-Service Inspection. The Place-In-Service Inspection shall be performed in accordance with paragraph 14-209, steps 1 thru 5 and 8.

14-209. Special Inspection. To perform the Special Inspection of the Rescue Net, proceed as follows:

1. Erect net by unfolding lower frame assembly and forcing assembly down. Frame will snap open.

2. Suspend open section of net and slide sleeves of upper support ribs between swivel joints. Sleeves rest on support rib stops.

3. Inspect entire rescue net for signs of damage, corrosion and contamination.

4. Inspect net assembly for fraying or breakage.

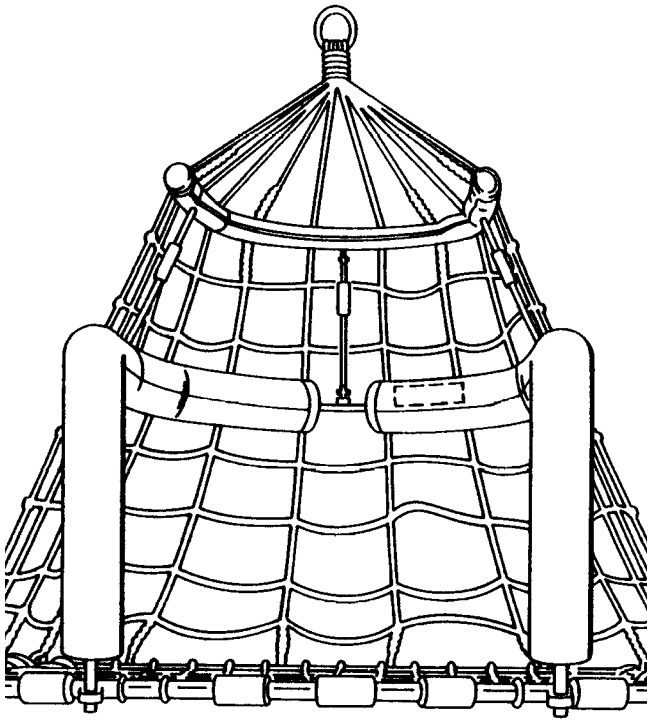

014027

Figure 14-27. Rescue Net

5. Inspect all hardware for security of attachment and ease of operation.

6. Repair Rescue Net in accordance with paragraph 14-210.

7. Clean Rescue Net in accordance with paragraph 14-211.

8. Pack Rescue Net in accordance with paragraph 14-212.

14-210. REPAIR. Repairs are limited to the replacement of components that can be procured and easily removed and replaced. Refer to figure 14-28 for component identification. Replace Rescue Net as necessary.

14-211. CLEANING. To clean the Rescue Net, proceed as follows:

Materials Required

Quantity	Description	Reference Number
As Required	Detergent, General Purpose	MIL-D-16791
As Required	Cloth, Lint-Free	MIL-C-85043

1. Remove corrosion in accordance with NAVAIR 01-1A-509 manual.

2. Rinse Rescue Net with clean water.

3. Using a cloth and a mixture of clean water and detergent, scrub or wipe contaminated area until area is clean.

4. Rinse a second time with fresh water to remove soap and contaminants.

5. Air dry.

14-212. PACKING. Pack the Rescue Net by sliding sleeves of upper support ribs up and away from swivel joints. Collapse upper section of net. Fold lower frame by applying upward pressure on snap joints. Fold net. Secure net in the folded position with elastic strap (NIIN 01-029-9084) or equivalent.

14-213. ILLUSTRATED PARTS BREAKDOWN.

14-214. The Illustrated Parts Breakdown lists and illustrates the assemblies and detail parts of the Rescue Net.

14-215. The Illustrated Parts Breakdown should be used when requisitioning and identifying parts.

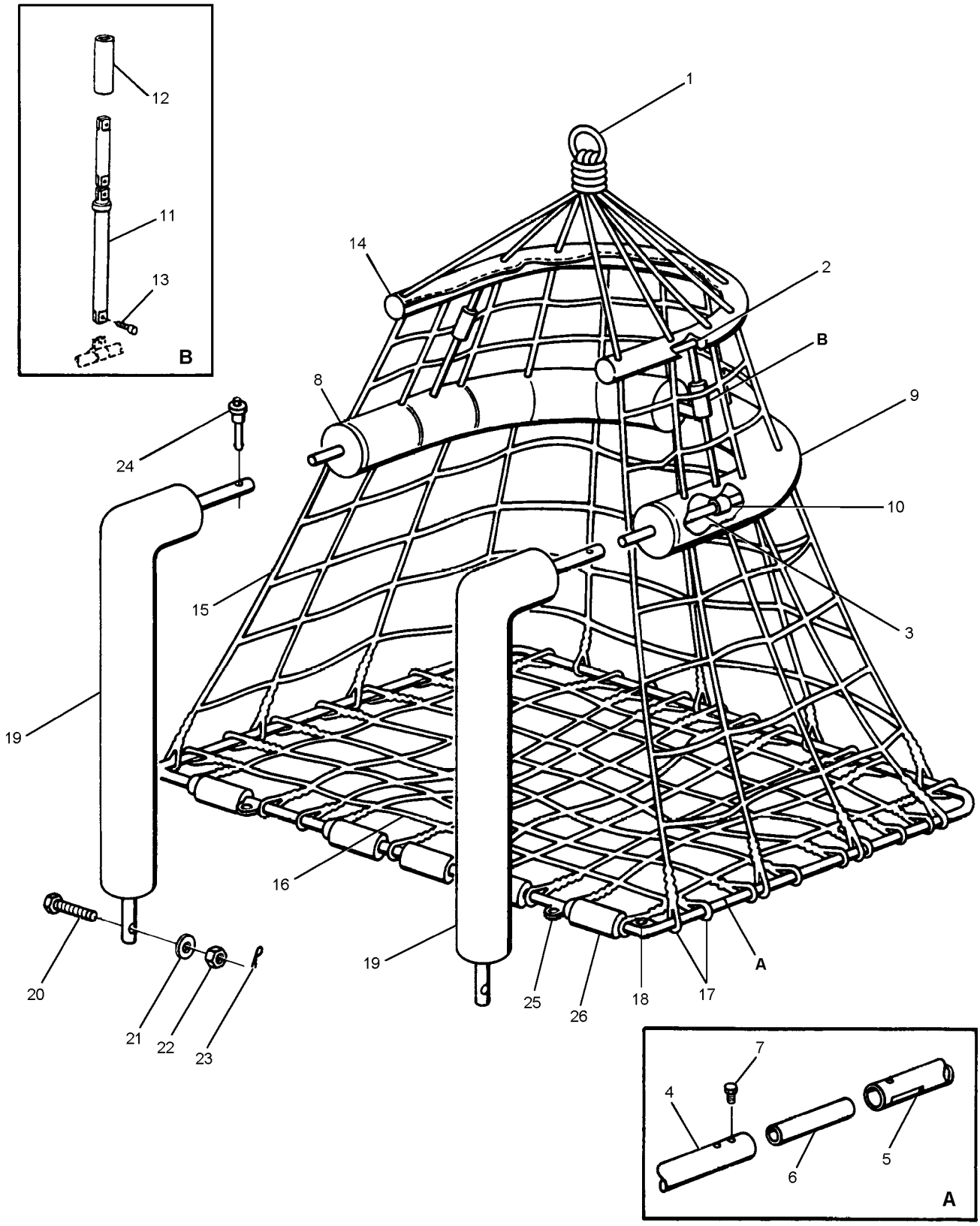

Figure 14-28. Rescue Net (68X874)

Figure and Index Number	Part Number	Description 1 2 3 4 5 6 7	Units Per Assembly	Usable On Code
14-28	68X874	AIR SEA RESCUE NET (30416)	REF	
-1	68X874-1	. RING, Pickup	1	
-2	68X874-2	. U-RING, Top	1	
-3	68X874-3	. FRAME, Center	1	
	68X874-5	. D-RING ASSEMBLY, Bottom	1	
-4	68X874-6	. . D-TUBE, Front	1	
-5	68X874-7	. . D-TUBE, Rear	1	
-6	68X874-8	. . D-TUBE, Sleeve	2	
-7	68X874-21	. D-RING, Bolt	6	
	68X874-910	. FLOAT ASSEMBLY	1	
-8		. . FLOAT, Right	1	
-9		. . FLOAT, Left	1	
-10		. STUD, Stand-up	6	
	68X874-11	. ARM-SLEEVE ASSEMBLY	3	
-11	68X874-1617	. . ARM, Stand-up	3	
-12	68X874-16	. . SLEEVE, Stand-up	3	
-13	68X874-17	. . BOLT, Stand-up Stud	6	
-14	68X874-22	. PADDING-COVER ASSEMBLY	1	
-15	68X874-1314	. NET ASSEMBLY	1	
-16	68X874-12	. NET, Bottom	1	
-17	68X874-15	. SLEEVE, Guard	54	
-18		. BRACKET, Support Float	2	
-19		. SUPPORT FLOAT	2	
-20		. BOLT	2	
-21	AN3C-14	. WASHER	2	
-22	AN960C10	. NUT	2	
-23	MS17825-3	. COTTER KEY	2	
-24	MS24665-151	. PIN, Quick Release	2	
-25	MS17984-408	. V-RING	3	
-26	MS22020-1	. BUMPER	5	

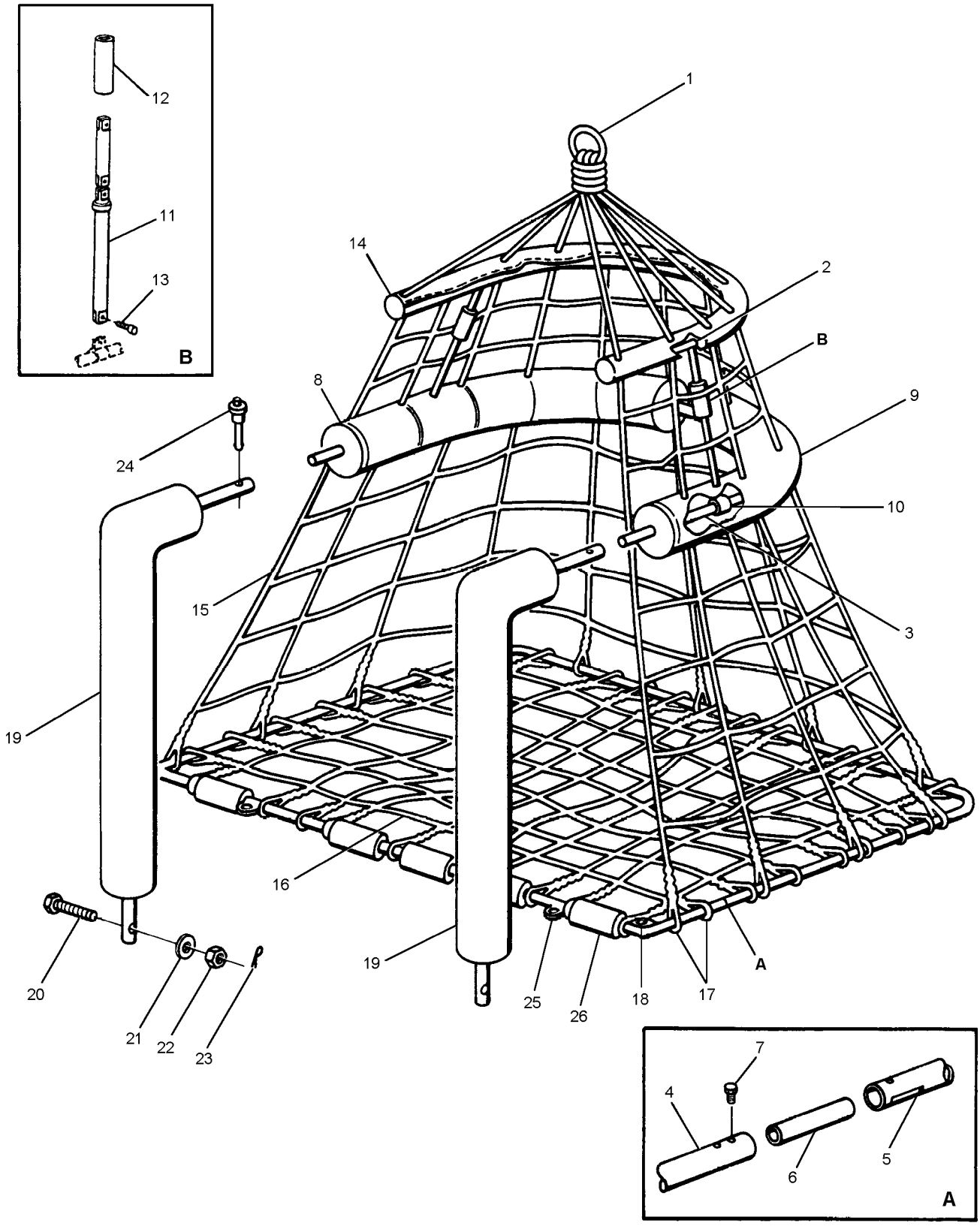

Figure 14-29. Rescue Net (X872SF)

Figure and Index Number	Part Number	Description 1 2 3 4 5 6 7	Units Per Assembly	Usable On Code
14-29	X872SF	AIR SEA RESCUE NET (30416)	REF	
-1	X872-1	. RING, Pickup	1	
-2	X872-2	. U-RING, Top	1	
-3	X872-3	. FRAME, Center	1	
	X872-5	. D-RING ASSEMBLY, Bottom	1	
-4	X872-6	. . D-TUBE, Front	1	
-5	X872-7	. . D-TUBE, Rear	1	
-6	X872-8	. . D-TUBE, Sleeve	2	
-7	X872-21	. D-RING, Bolt	6	
	X872-910	. FLOAT ASSEMBLY	1	
-8		. . FLOAT, Right	1	
-9		. . FLOAT, Left	1	
-10		. STUD, Stand-up	6	
	X872-11	. ARM-SLEEVE ASSEMBLY	3	
-11	X872-1617	. . ARM, Stand-up	3	
-12	X872-16	. . SLEEVE, Stand-up	3	
-13	X872-17	. . BOLT, Stand-up Stud	6	
-14	X872-22	. PADDING-COVER ASSEMBLY	1	
-15	X872-1314	. NET ASSEMBLY	1	
-16	X872-12	. NET, Bottom	1	
-17	X872-15	. SLEEVE, Guard	54	
-18		. BRACKET, Support Float	2	
-19		. SUPPORT FLOAT	2	
-20		. BOLT	2	
-21	AN3C-14	. WASHER	2	
-22	AN960C10	. NUT	2	
-23	MS17825-3	. COTTER KEY	2	
-24	MS24665-151	. PIN, Quick Release	2	
-25	MS17984-408	. V-RING	3	
-26	MS22020-1	. BUMPER	5	

Section 14-11. Collapsible Rescue Basket P/N 495

14-215A. DESCRIPTION.

14-215B. The Collapsible Rescue Basket (Figures 14-29A through 14-29C is constructed primarily of welded type 304, electro-polished, stainless steel making it virtually maintenance free. The bail assembly, consisting of two halves, folds into the rescue basket, and each side collapses for compact stowage. The integrated tubular hinge design ensures safety and reduces maintenance. The sides of basket are constructed of 1/2" nylon webbing. The four side supports lock into the bottom frame when the basket is erected. The bottom is enclosed with a plastic, semi-rigid mesh liner with 1" openings. The basket possesses excellent floatation characteristics, is positively self-righting with 100% reserve buoyancy. Flotation covers are printed with safety pictorials and have high intensity retro-reflective markings. Rigged for use, the 495 Collapsible Rescue Basket is approximately 45" x 25" x 41" (l x w x h), and weighs 39 lbs maximum. Folded for storage, the unit is approximately 45" x 25" x 9 1/2" (l x w x h).

14-215C. MODIFICATION.

14-215D. There are no modifications for the Collapsible Rescue Basket that are required or authorized.

14-215E. APPLICATION.

14-215F. The Collapsible Rescue Basket is designed for use in the H-60 series aircraft as designated by SARMM and local authority.

14-215G. MAINTENANCE.

14-215H. Inspection. The Collapsible Rescue Basket is subject to a Place-in-Service inspection and Special inspection. Refer to Table 14-1 for required inspection cycles.

Figure 14-29A. Collapsible Rescue Basket (Open)

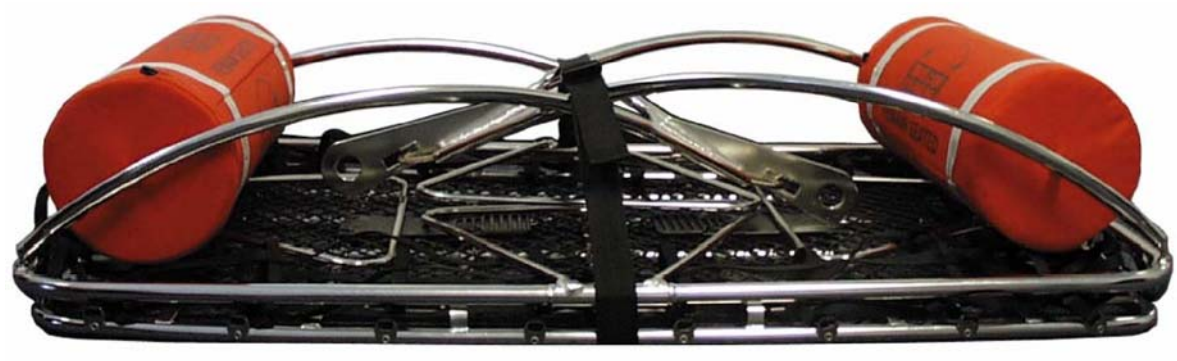

Figure 14-29B. Collapsible Rescue Basket (Folded)

Figure 14-29C. Collapsible Rescue Basket Case

NOTE

Any discrepancies noted during the Place-in-Service inspection shall be reported in accordance with COMNAVAIRFORINST 4790.2.

14-215I. **Place-In-Service Inspection**. The Place-in-service inspection shall be performed as follows:

1. Remove basket from stowage case. Remove stowage strap from basket. Inspect stowage case and strap for cuts, tears, abrasion and broken stitching.

2. Erect Basket. Raise the upper frame assembly on either end of the basket and engage the upper frame support into the latch on the lower frame. Repeat for opposite end. Latch the remaining two upper frame supports on the left and right side of the basket. Raise the two (2) bail assemblies and engage the bail retainer to hold bails in the up position.

3. Inspect the bail assemblies, upper frame, upper frame supports and lower frame assemblies for broken or cracked weld, bends (deformation), corrosion and severe abrasion.

4. Inspect float covers, floats, plastic mesh liner and liner guards for proper installation, cuts, tears, abrasion or any other visible damage.

5. Inspect basket side net for proper installation, cuts, tears, abrasion and broken stitching.

6. Stow basket. Disengage the bail retainer and open both bails fully. Release the upper frame support latches for the left and right sides of the basket and move supports toward the center of the basket. Next release upper frame support latch on one end of basket and move support toward center of basket. Release final upper frame support latch on the opposite end of the basket and move support toward center of basket. Gather side net webbing toward center of basket and close bail assemblies. Secure the basket by wrapping the stowage strap around the center of the basket, close buckle, and adjust strap for tight fit.

7. Verify Serial Number on case with basket. (Figure 14-29D) Insert basket into storage case and close.

8. Record inspection data on appropriate forms in accordance with COMNAVAIRFORINST 4790.2 series.

14-215J. **Special Inspection**. To perform the Special 180 day inspection follow procedures in paragraph 14-215H, steps 1-6, step 8 and the following:

Materials Required

Quantity	Description	Reference Number
As Required	Detergent, General Purpose	MIL-D16791
As Required	Silicone Lubricant	MIL-S-8660
As Required	Cable Tie	MS3367-7-9 NIIN 00-570-9598

1. Re-stencil case if necessary.

2. Check for corrosion and remove as necessary.

3. Repair and clean in accordance with paragraph 14-215K.

14-215K. REPAIRS AND CLEANING.

14-215L. Repairs are limited to the replacement of the following parts:

Replacement parts:

#495-B Storage Bag and Strap
#495-01 Plastic Mesh Liner (w/cable ties)
#495-02 Side Net Replacement Kit
#495-10 Bail Retainer
#495-11 Liner Guard
#499-2 Floats w/covers
#499-3 Floats Covers, pr

Notes: 1. Replacement parts are available open purchase from:

Life Saving Systems Corp.
220 Elsberry Rd.
Apollo Beach, FL 33572-2289
1-813-645-2748
www.lifesavingsystems.com

1. Basket side net replacement (P/N 495-02): Drill heads off of rivets with proper size drill. Punch rivets inside of tube members. Align new basket side net seam in center of one end on bottom frame and insert rivets and secure rivets with proper tool. Place top frame assembly onto bottom frame and carefully align the upper part of the basket side net. Insert rivets and secure rivets with proper tool. Check for proper basket operation.

2. Basket mesh liner replacement (P/N 495-01): Remove liner and liner guard by cutting the plastic cable ties. Align liner and secure with cable ties. Cut off excess length of ties squarely. Align liner guards and secure with new cable ties. Cut off excess length of ties squarely.

3. Broken cable ties can be replaced as necessary.

14-215M. **Cleaning.**

1. After use or as required, thoroughly wash the entire basket with fresh water and mild detergent. Rinse with clean fresh water. Lubricate all hinge points with lubricant.

Manufacturer's Information and Part Number Location

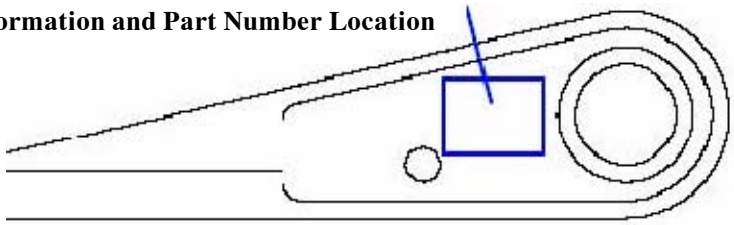

Figure 14-29D. Bail Eye

Section 14-12. Forest Penetrator and Rescue Seat

14-216. DESCRIPTION.

14-217. The Forest Penetrator (figure 14-30) and Rescue Seat (figure 14-31) are used to assist rescue personnel for both over land and over water rescue operations. The Forest Penetrator accommodates one to three survivors and the Rescue Seat accommodates one or two survivors. Each seat contains safety straps to secure personnel to the seat and a flotation collar (figure 14-32) to prevent the seat from sinking in over water rescues. The Rescue Seat will replace the Forest Penetrator by attrition.

14-218. MODIFICATION.

14-219. There are no modifications for the Forest Penetrator or Rescue Seat that are required or authorized.

14-220. MAINTENANCE.

14-221. INSPECTION. The Forest Penetrator and Rescue Seat shall be subjected to a Place-In-Service Inspection and a Special Inspection. Refer to table 14-1 for required inspection cycles.

14-222. Place-In-Service Inspection. The Place-In-Service Inspection shall be performed in accordance with paragraph 14-223, steps 1a-f and i, 2a-c, and 3a-d.

14-223. Special Inspection. To perform the Special Inspection of the Forest Penetrator and Rescue Seat, proceed as follows:

1. Forest Penetrator.

a. Remove the flotation collar if attached and inspect in accordance with step 3.

b. Inspect fabric and webbing for cuts, tears, deterioration, abrasion, stains, and dirt.

c. Inspect all seams for broken stitches.

d. Inspect safety straps for security of attachment. Install straps in nylon case by faking straps and ensuring yellow tabs marked PULL OUT are accessible and visible. Secure fastener tape.

e. Check seat locking and retraction mechanisms for ease of operation.

f. Inspect all hardware and slide fasteners for security of attachment, corrosion, damage, wear, cracks, sharp nicks, and burrs.

g. Repair or replace in accordance with paragraph 14-224.

h. Clean in accordance with paragraph 14-227.

i. Inspect markings in accordance with paragraph 14-228.

2. Rescue Seat. Inspect Rescue Seat in accordance with step 1b thru 1i and the following:

a. Inspect end plug for proper installation and security of attachment. End plug should be installed so that the seat remains level and stable when in a vertical position on the ground.

b. Stow safety strap.

c. Perform Tension (Push/Pull) test in accordance with paragraph 14-225.

d. Perform Load Test (conditional and repair only) in accordance with paragraph 14-226.

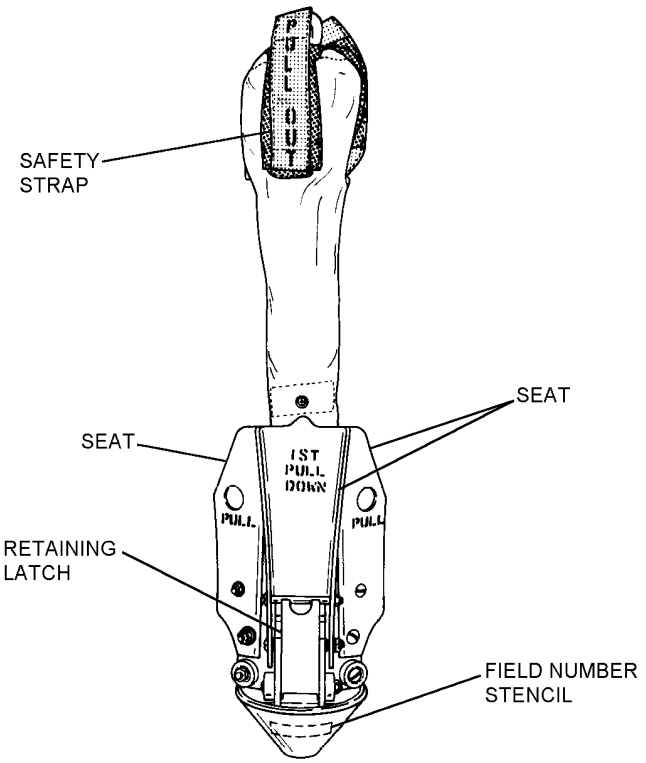

Figure 14-30. Forest Penetrator, Parts Nomenclature

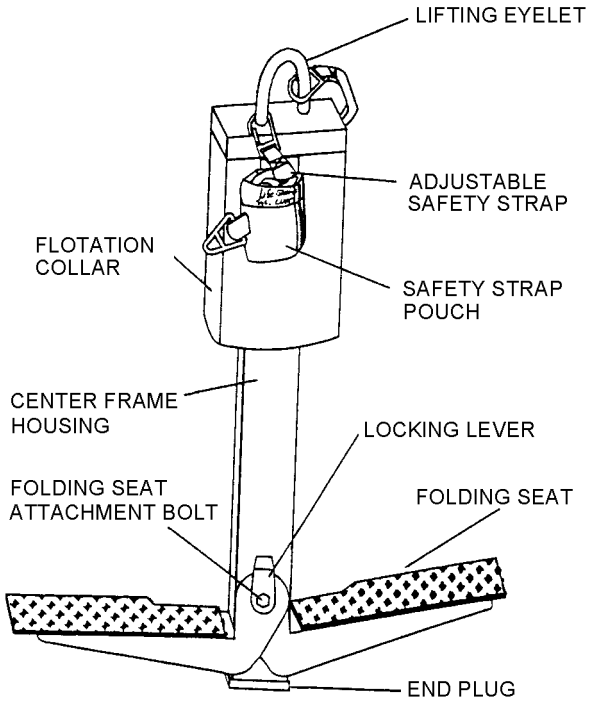

014031

Figure 14-31. Rescue Seat (LSC P/N 420), Parts Nomenclature

3. Forest Penetrator Flotation Collar.

a. Inspect slide fastener for damage, corrosion, and ease of operation. Lightly lubricate slide fastener with lubricating oil (VV-L-800). Wipe off any excess with clean cloth.

b. Inspect fabric for cuts, tears, deterioration and abrasion.

c. Attach to Forest Penetrator as necessary.

d. Repair or replace in accordance with paragraph 14-224.

e. Clean in accordance with paragraph 14-227.

f. Inspect markings in accordance with paragraph 14-228.

14-224. REPAIR.

NOTE

When the Forest Penetrator is no longer repairable, replace with Rescue Seat P/N 420.

1. Forest Penetrator. Repairs for the Forest Penetrator are limited to cleaning, removing corrosion, lubricating zipper and retracting/locking mechanism and replacement of cotter pins (figure 14-33, items 2 and 17) when corroded, broken or missing. After lubricating, wipe excess with clean dry cloth.

2. Forest Penetrator Flotation Collar. Repairs are limited to cleaning and lubricating zipper.

CAUTION

Perform a Tension (Push/Pull) Test and Load Test after making repairs to Rescue Seat.

3. Rescue Seat. Repairs are limited to cleaning, removal of corrosion and the replacement of components listed in table 14-100.

14-225. TENSION (PUSH/PULL) TEST RESCUE SEAT P/N 420. To perform the Tension (Push/Pull) Test, proceed as follows:

Materials Required

Quantity	Description	Reference Number
1	Gauge, Tension (Push/Pull)	NIIN 00-473-0108
As Required	Cord, Nylon, Type III	MIL-C-5040E NIIN 00-240-2146
As Required	Sealing Compound (loctite)	MIL-S-46163 NIIN 01-054-3968

1. With the seats in the up position, tie a piece of type III nylon cord around the top of the folding seat two inches from the top.

2. Attach nylon cord to the push/pull gauge.

3. Gradually pull gauge until seat opens. Seat shall open between 8 and 12 pounds. Repeat for second seat.

4. If either seat fails the Tension (Push/Pull) Test, remove locking lever and set screw. Adjust seat attachment bolt with locking lever until desired pull down tension is achieved. Re-install locking lever and secure with setscrew and locking washer. Apply sealing compound (loctite) to setscrew before installing.

14-226. LOAD TEST FOR RESCUE SEAT P/N 420 (Conditional and Repair Only). To perform the Load Test, proceed as follows:

1. Inspect the Rescue Seat for damage. If damaged, replace Rescue Seat.

2. If there are no visual signs of damage, attach and secure the Rescue Seat lifting eyelet to a lifting device, which will suspend the seat so that it does not touch the ground.

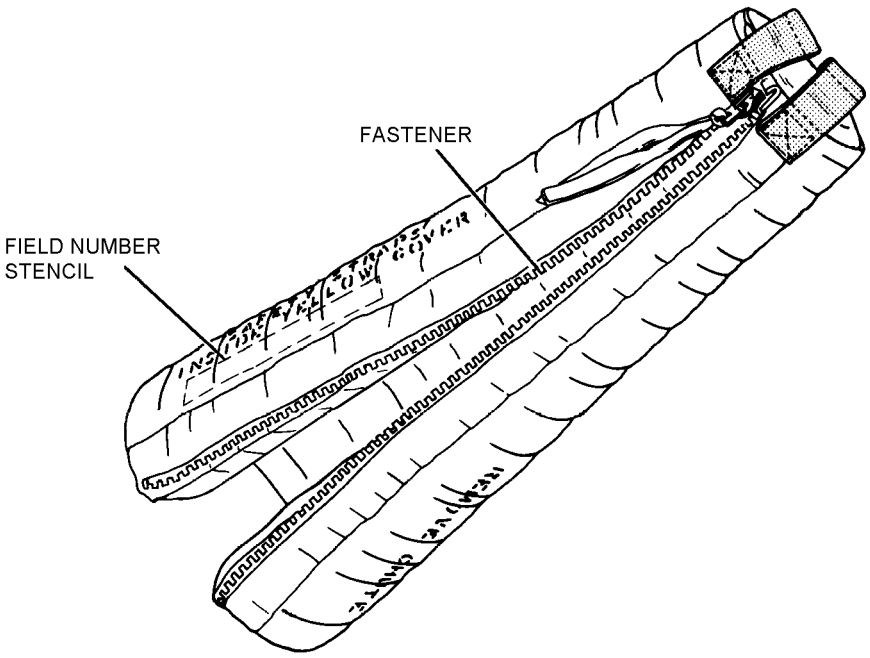

014032

Figure 14-32. Flotation Collar, Parts Nomenclature

3. Attach 250 pounds of weight, by using rope or webbing, to each folding seat so that the weight is evenly distributed and secured.

4. Suspend the Rescue Seat for thirty minutes. While suspended, inspect for signs of damage. Lower seat to ground, disconnect weight, and inspect for signs of damage.

5. Failure of the Load Test shall render the Rescue Seat non-RFI.

6. If Rescue Seat passes Load Test, inspect in accordance with paragraph 14-223.

14-227. CLEANING. To clean the Rescue Seat, proceed as follows:

Materials Required

Quantity	Description	Reference Number
As Required	Detergent, General Purpose	MIL-D-16791
As Required	Cloth, Lint-Free	MIL-C-85043

1. Remove corrosion in accordance with NAVAIR 01-1A-509 manual.

2. Rinse Rescue Seat with clean water.

3. Using a cloth and a mixture of clean water and detergent, scrub or wipe contaminated area until area is clean.

4. Rinse a second time with fresh water to remove soap and contaminants.

5. Air dry.

14-228. MARKINGS. Compare markings to table 14-7, 14-8 and 14-9. Restore markings using indelible ink.

Table 14-7. Forest Penetrator Markings

Marking	Location	Letter Height
PULL OUT	End of Forest Penetrator Safety Strap	1/2 Inch
1ST PULL DOWN	Bottom of Forest Penetrator Seats	1/2 Inch
PULL	Sides of Forest Penetrator Seats	1/2 Inch
[Field Number]	Bottom of Forest Penetrator	1/2 Inch

Notes: 1. All markings shall be stamped or stencilled with wash-proof black ink. All words enclosed by brackets, in the column headed MARKING, shall not be stencilled on the equipment; they are to be regarded as instructions only.

Table 14-8. Flotation Collar Markings

Marking	Location	Letter Height
K26-1017-1 (CAGE 84955)	Top of Flotation Collar	1/2 Inch
SAFETY STRAPS INSIDE YELLOW COVER	Right Side of Flotation Collar	1/2 Inch
REMOVE CHUTE	Left Side of Flotation Collar	1/2 Inch
[Field Number]	Side of Flotation Collar	1/2 Inch

Notes: 1. All markings shall be stamped or stencilled with wash-proof black ink. All words enclosed by brackets, in the column headed MARKING, shall not be stencilled on the equipment; they are to be regarded as instructions only.

Table 14-9. Rescue Seat Markings P/N 420

Marking	Location	Letter Height
Warning: Do not lower with both seats extended. Improper use may cause serious injury or death.	Above each rescue seat on flotation cover	1/8 inch
[3 Diagrams with instructions]	Same as above	3/16 inch
[Mfg tag with the following:] Lifesaving Systems Corp P/N 420 S/N [as applicable]	Underneath seat on one side	Note 2

Notes: 1. All markings shall be stamped or stencilled with indelible black ink. All words enclosed by brackets, in the Marking column, shall not be stencilled on the equipment, they are to be regarded as information or instructions only.
2. If tag becomes loose, damaged or illegible, etch on bottom of seat.
3. Refer to NTTP 3-50.1 series for SAR Aircrewman procedures.
4. Letter heights are approximate.

14-229. ILLUSTRATED PARTS BREAKDOWN.

14-230. The Illustrated Parts Breakdown lists and illustrates the assemblies and detail parts of the Forest Penetrator and Flotation Collar, P/N K26-1000-9 and K26-1017-1, respectively. These assemblies are manufactured by Kaman Aerospace (CAGE 84955).

14-231. The Illustrated Parts Breakdown should be used when requisitioning and identifying parts.

14-232. Any parts required for LSC Rescue Seat P/N 420 must be open purchased from Lifesaving Systems Corporation, (CAGE 64249), 220 Elsberry Road, Apollo Beach, FL 33572-2289, Phone (813) 645-2748. Replacement parts for the Rescue Seat reflect LSC part numbers indicated in table 14-10.

Table 14-10. Rescue Seat Parts List

Item Description	Part Number
Flotation Cover	420-01
Flotation Foam	420-02
Safety Strap	420-03
Safety Strap Bolt	420-04
Safety Strap Locking Nut	H095
Plastic Seat	420-05
Locking Lever	420-07
Locking Lever Bolt	420-08
Seat Locking Nut	420-09
Seat Frame	420-10
Seat Bushing Set	420-11

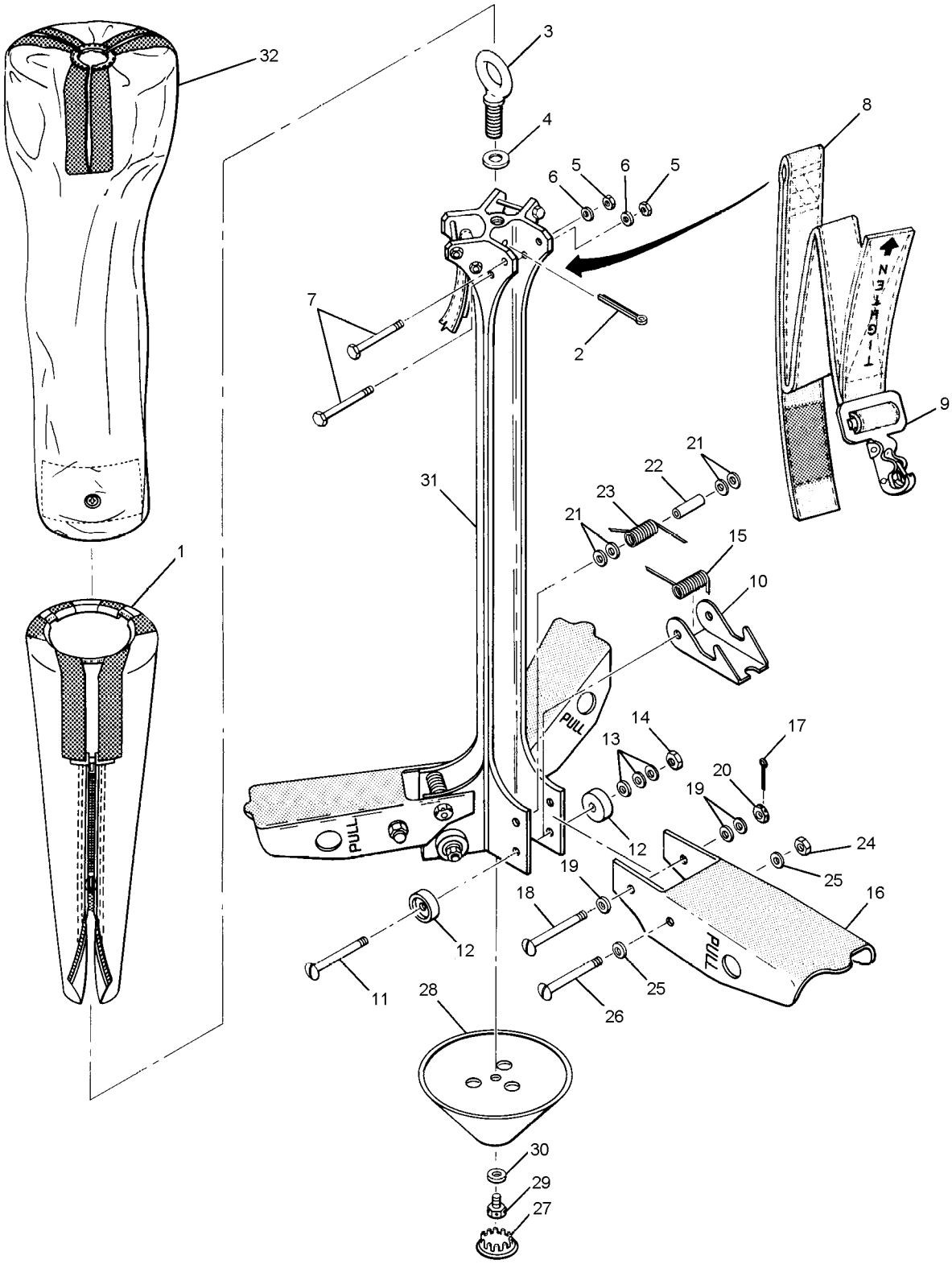

014033

Figure 14-33. Forest Penetrator

Figure and Index Number	Part Number	Description 1 2 3 4 5 6 7	Units Per Assembly	Usable On Code
14-33	K26-1000-9	FOREST PENETRATOR ASSY (84955)	1	
-1	K26-1017-1	. COLLAR, Flotation (84955)	1	
-2	MS24665-379	. PIN, Cotter	1	
-3	K26-1009-11	. BOLT, Eye (84955)	1	
-4	MIL-S-22499	. SHIM, Laminated	1	
-5	NAS679A4	. NUT, Self-Locking, hexagon	6	
-6	AN960PD416L	. WASHER, Flat	6	
-7	AN425A	. BOLT	6	
-8	K26-1005-1	. STRAP ASSEMBLY, Safety (84955)	3	
-9	MS22018-1	. HOOK, Snap	3	
-10	K26-1018-11	. LATCH (84955)	3	
		(ATTACHING PARTS)		
-11	AN26-54	. BOLT, Clevis	1	
-12	K26-1010-11	. STOP (84955)	2	
-13	AN960PD616	. WASHER, Flat	3	
-14	NAS679A6	. NUT, Self-Locking, hexagon	1	
		---*---		
-15	K26-1019-11	. SPRING (84955)	1	
-16	K26-1042-3	. SEAT (84955)	3	
		(ATTACHING PARTS)		
-17	MS24665-300	. PIN, Cotter	1	
-18	AN26-54	. BOLT, Clevis	1	
-19	AN960PD616	. WASHER, Flat	3	
-20	AN320-6 or NAS67946	. NUT, Plain, castellated, shear	1	
		---*---		
-21	AN960PD616	. WASHER, Flat	12	
-22	NAS43DD6-94	. SPACER	3	
-23	K26-1008-11	. SPRING (84955)	3	
-24	NAS679A5	. NUT, Self-Locking, hexagon	3	
-25	AN960PD516	. WASHER, Flat	6	
-26	AN25-54	. BOLT, Clevis	3	
-27	SS51045	. CAP	1	
-28	K26-1083-1	. WEIGHT (84955)	1	
		(ATTACHING PARTS)		
-29	MS20074-06-05	. BOLT, Machine	1	
-30	AN935-516	. WASHER, Lock	1	
		---*---		
-31	K26-1001-1	. BODY ASSEMBLY (84955)	1	
-32	K26-1021-1	. COVER ASSEMBLY (84955)	1	

Section 14-13. Rappelling and Tree Extraction Equipment

14-233. GENERAL.

14-234. Rappelling equipment has advantages over the hoist because of an increase in speed, reliability, accuracy, safety and simplicity. Tree extraction equipment is used to extract a survivor from a tree.

Section 14-13.1. Descent Control Device

14-235. DESCRIPTION.

14-236. The Descent Control Device (figure 14-34) is used to control the rate of decent during rappelling operations.

14-237. MODIFICATION.

14-238. There are no modifications for the Descent Control Device that are required or authorized.

14-239. MAINTENANCE.

14-240. INSPECTION. The Descent Control Device shall be subjected to a Place-In-Service Inspection and a Special Inspection. Refer to table 14-1 for required inspection cycles.

14-241. Place-In-Service Inspection. The Place-In-Service Inspection shall be performed in accordance with paragraph 14-242, steps 1 and 2.

14-242. Special Inspection. To perform the Special Inspection of the Descent Control Device, proceed as follows:

1. Inspect for corrosion, contamination and damage.

2. Inspect detent pin for ease of operation.

3. Inspect shaft for developing grooves. Use a depth reading caliper micrometer to measure depth of groove. Replace Descent Control Device if groove shows 1/8 inch or more of groove wear.

4. Repair in accordance with paragraph 14-243.

14-243. REPAIR. Repairs are limited to cleaning. Refer to paragraph 14-244. All other discrepancies shall render the item non-RFI and it shall be replaced.

14-244. CLEANING. To clean the Descent Control Device, proceed as follows:

Materials Required

Quantity	Description	Reference Number
As Required	Detergent, General Purpose	MIL-D-16791
As Required	Cloth, Lint-Free	MIL-C-85043

1. Rinse Descent Control Device with clean water.

2. Using a cloth and a mixture of clean water and detergent, scrub or wipe contaminated area until area is clean.

3. Rinse a second time with fresh water to remove soap and contaminants.

4. Dry using a clean cloth.

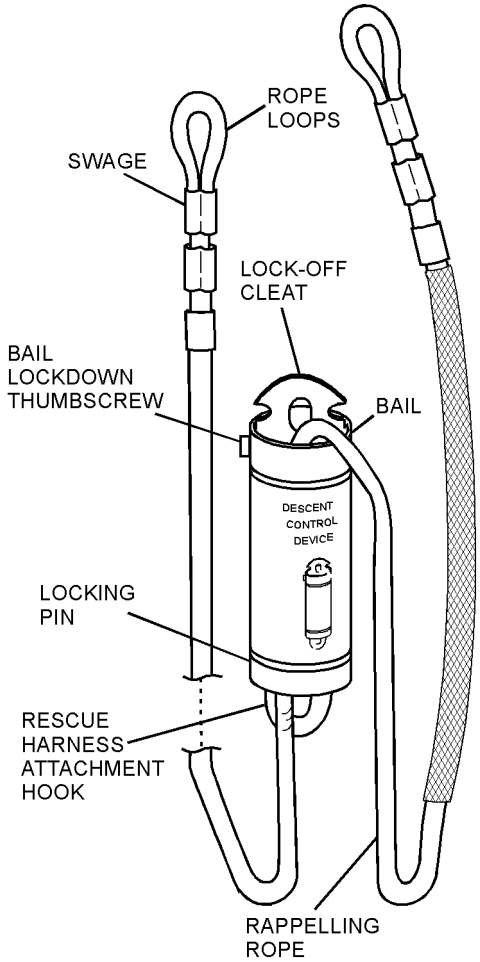

014034

Figure 14-34. Descent Control Device

Section 14-13.2. Rappelling Ropes With Rope Storage Bags

14-245. DESCRIPTION.

14-246. Two ropes (150-foot and 250-foot) are used in conjunction with the Descent Control Device for rappelling. Each rope has a swaged end loop. Rappeling Rope storage bags are designed to carry and store the ropes. Rappelling rope storage bags are attached to a locally manufactured waist belt for assistance during rappelling operations.

14-247. MODIFICATION.

14-248. There are no modifications for the Rappelling Ropes that are required or authorized.

14-249. MAINTENANCE.

14-250. INSPECTION. The Rappelling Ropes and Storage Bags shall be subjected to a Place-In-Service Inspection and a Special Inspection. Refer to table 14-1 for required inspection cycles.

14-251. Place-In-Service Inspection. The Place-In-Service Inspection shall be performed in accordance with paragraph 14-252, steps 2 thru 8.

14-252. Special Inspection. To perform the Special Inspection of the Rappelling Ropes and Storage Bags, proceed as follows:

WARNING

Failure to comply with proper maintenance on rappelling ropes could cause injury or death to user.

NOTE

A Conditional Inspection shall be performed when the rope has had a possible overstressed occurrence.

1. Inspect maintenance record for number of rappels. Remove from service and discard ropes under the following conditions:

a. 200 rappels or 24 months from date placed in service.

b. Arrest of a free fall of two (2) feet or more.

c. After two rapid descent at speeds in excess of fifteen feet per second.

2. Inspect rope for cuts, fraying, broken strands, hard and soft spots and glazing (clear melted sections).

3. Inspect for the presence of contaminants such as fuels, dirt, rust and stains.

4. Inspect swaged loops for cuts, fraying and excessive wear.

5. Inspect swaged fittings for security of attachment and indications of rope separation from swaged fittings.

6. Stow ropes in accordance with paragraph 14-255.

7. Inspect storage bags for signs of contaminants.

8. Inspect storage bags for cuts, tears, holes broken stitches.

9. Inspect waist belt for contaminants, cuts, frays, deterioration and broken stitches.

10. Repair in accordance with paragraph 14-253.

14-253. REPAIR. Repairs on ropes are limited to cleaning; all other discrepancies require removal of ropes from service. Repairs of bags and waist belt are limited to cleaning and repair of broken stitches, holes and tears. Unlimited repairs are authorized on bags and waist belt only, however, replace bags and waist belt when no longer practical to repair.

14-254. CLEANING. To clean Rappelling ropes, bags and waist belts, proceed as follows:

Materials Required

Quantity	Description	Reference Number
As Required	Detergent, General Purpose	MIL-D-16791
As Required	Cloth, Lint-Free	MIL-C-85043

1. Rinse Rappelling ropes, bags and waist belts with clean water.

2. Using a cloth and a mixture of clean water and detergent, wipe contaminated area until area is clean.

3. Rinse a second time with fresh water to remove soap and contaminants.

4. Hang to dry.

14-255. STOWAGE. Use either of the following methods to stow rappelling ropes into storage bag.

1. Daisy-chain entire length of rope. Place in bag in an orderly fashion.

2. Fake entire rope into bag working back and forth until all rope is stowed.

Section 14-13.3. Basic Rappel Harness/Pro Series Rescue Harness

14-256. DESCRIPTION.

NOTE

For continuity throughout this section the Basic Rappel Harness and Pro Series Harness will be referred to as, harness, unless otherwise indicated.

The Pro Series Rescue Harness is the replacement for the Basic Rappel Harness. The Basic Rappel Harness is still authorized for use until no longer serviceable.

14-257. The harness (figures 14-35 and 14-35A) is used in conjunction with other rappelling equipment to quickly descend from a rescue aircraft to the ground. It is used to perform rappelling and belay operations as well as tree extraction procedures.

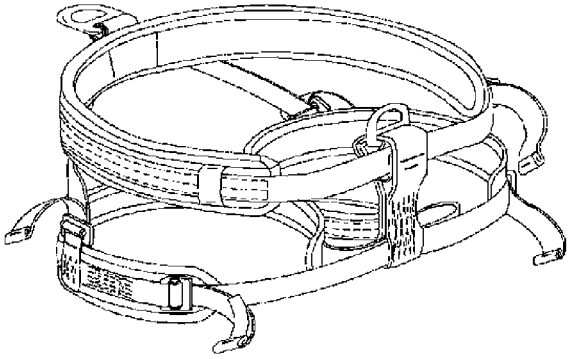

014035

Figure 14-35. Basic Rappel Harness

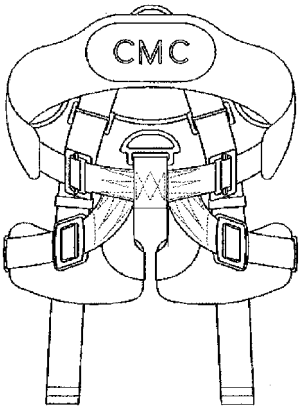

Figure 14-35A. Pro Series Rescue Harness

14-258. MODIFICATION.

14-259. There are no modifications for the harness that are required or authorized.

14-260. MAINTENANCE.

14-261. INSPECTION. The harness shall be subjected to a Place-In-Service Inspection and a Special Inspection. Refer to table 14-1 for required inspection cycles.

14-262. Place-In-Service Inspection. The Place-In-Service Inspection shall be performed in accordance with paragraph 14-263, steps 1 thru 4.

14-263. Special Inspection. To perform the Special Inspection of the harness, proceed as follows:

WARNING

If the harness has been subjected to shock loads, fall loads or abuse other than normal use, remove from service and destroy.

1. Inspect for broken, frayed stitching.

2. Inspect webbing for cuts, worn or frayed areas, broken fibers, soft or dry spots.

3. Inspect for contamination from oils, fuels, saltwater, etc.

4. Inspect all hardware for cracks, deformity, corrosion and ease of operation.

5. Repair harness in accordance with paragraph 14-264.

14-264. REPAIR. Repairs is limited to cleaning of harness. Refer to paragraph 14-265. All other discrepancies shall render the item non-RFI and it shall be replaced.

14-265. CLEANING. To clean harness, proceed as follows:

Materials Required

Quantity	Description	Reference Number
As Required	Detergent, General Purpose	MIL-D-16791
As Required	Cloth, Lint-Free	MIL-C-85043

1. Rinse harness with clean water.

2. Using a cloth and a mixture of clean water and detergent, wipe contaminated area until area is clean.

3. Rinse a second time with fresh water to remove soap and contaminants.

4. Hang to dry.

Section 14-13.4. Carabiners

14-266. DESCRIPTION.

14-267. Carabiners (figures 14-36 and 14-37) are oblong metal rings of various shapes and types used for rappelling and tree extraction. Carabiners have different weight limitations depending upon the type of metal and construction.

14-268. MODIFICATION.

14-269. There are no modifications for the Carabiners that are required or authorized.

14-270. MAINTENANCE.

14-271. INSPECTION. The Carabiners shall be subjected to a Place-In-Service Inspection and a Special Inspection. Refer to table 14-1 for required inspection cycles.

14-272. Place-In-Service Inspection. The Place-In-Service Inspection shall be performed in accordance with paragraph 14-273, steps 1 thru 4.

14-273. Special Inspection. To perform the Special Inspection of the Carabiners, proceed as follows:

CAUTION

Do not lubricate carabiners. Replace if locking sleeve or gate becomes stiff when operated.

1. Inspect for cracks, burrs and nicks.

2. Inspect gate for ease of operation and alignment.

3. Inspect gate pin for wear.

4. Inspect for corrosion.

5. Repair in accordance with paragraph 14-274.

6. Clean in accordance with paragraph 14-275.

14-274. REPAIR. Repairs are limited to the removal of corrosion and cleaning. Refer to paragraph 14-275. All other discrepancies shall render the item non-RFI and it shall be replaced.

14-275. CLEANING. To clean the Carabiners, proceed as follows:

Materials Required

Quantity	Description	Reference Number
As Required	Detergent, General Purpose	MIL-D-16791
As Required	Cloth, Lint-Free	MIL-C-85043

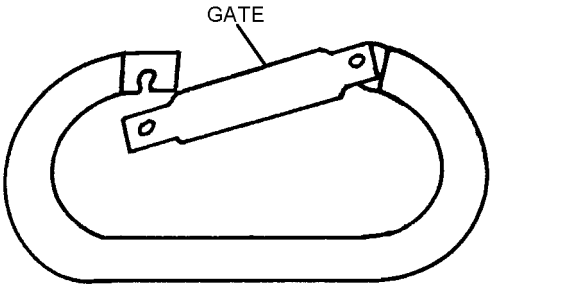

Figure 14-36. Carabiner

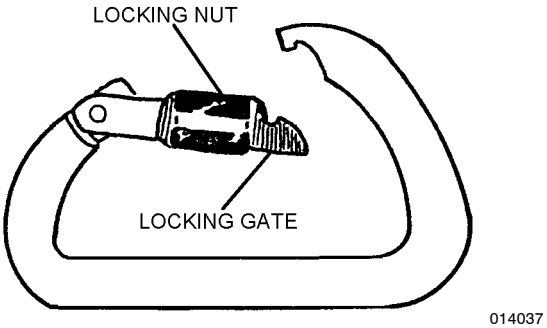

Figure 14-37. Locking Carabiner

1. Remove corrosion in accordance with NAVAIR 01-1A-509 manual.

2. Rinse Carabiners with clean water.

3. Using a cloth and a mixture of clean water and detergent, scrub or wipe contaminated area until area is clean.

4. Rinse a second time with fresh water to remove soap and contaminants.

5. Dry with a clean cloth.

Section 14-13.5. Spring Loaded Belay Plate

14-276. DESCRIPTION.

14-277. The Spring Loaded Belay Plate (figure 14-38) is used as a braking device for controlled dynamic belaying. It accommodates both a 9-mm and 11-mm rope.

14-278. MODIFICATION.

14-279. There are no modifications for the Spring Loaded Belay Plate that are required or authorized.

14-280. MAINTENANCE.

14-281. INSPECTION. The Spring Loaded Belay Plate shall be subjected to a Place-In-Service Inspection and a Special Inspection. Refer to table 14-1 for required inspection cycles.

14-282. Place-In-Service Inspection. The Place-In-Service Inspection shall be performed in accordance with paragraph 14-283, steps 1 thru 5.

14-283. Special Inspection. To perform the Special Inspection of the Spring Loaded Belay Plate, proceed as follows:

1. Inspect for cracks, nicks, burrs, corrosion and deformity.

2. Inspect weld at top of spring for cracks and security of attachment.

3. Inspect for contaminants, such as salt deposits, oil, fuels, etc.

4. Inspect spring for security of attachment to plate.

5. Inspect plate screw for tightness.

6. Repair in accordance with paragraph 14-284.

14-284. REPAIR. Repairs are limited to cleaning. Refer to paragraph 14-285. All other discrepancies shall render the item non-RFI and it shall be replaced.

14-285. CLEANING. To clean the Belay Plate, proceed as follows:

Materials Required

Quantity	Description	Reference Number
As Required	Isopropyl Alcohol	TT-I-735
As Required	Cloth, Lint-Free	MIL-C-85043

1. Remove corrosion in accordance with NAVAIR 01-1A-509 manual.

2. Rinse Belay Plate with clean water to remove salt deposits.

3. Remove oils, grease, fuels, etc. from Belay Plate with isopropyl alcohol or equivalent.

4. Wipe Belay Plate with a clean dry cloth.

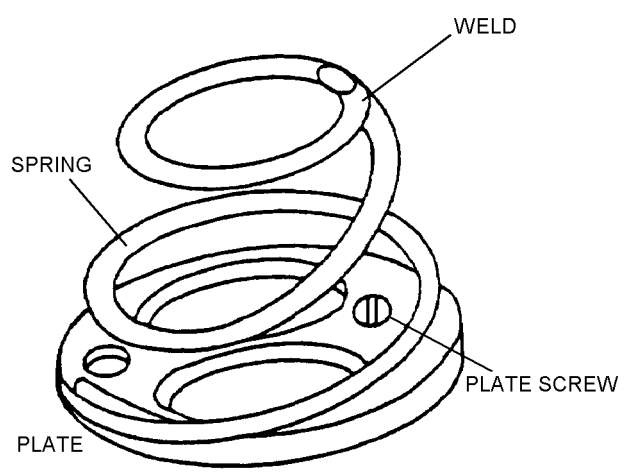

014038

Figure 14-38. Spring Loaded Belay Plate

Section 14-13.6. 540 Belay Device

To Be Provided

Section 14-13.7. Dynamic Rope (Kernmantle) With Storage Bag

14-286. DESCRIPTION.

14-287. The Dynamic Rope is an 11-mm rope used for hoisting evolutions.

14-288. MODIFICATION.

14-289. There are no modifications for the Dynamic Rope that are required or authorized.

14-290. MAINTENANCE.

14-291. INSPECTION. The Dynamic Rope shall be subjected to a Place-In-Service Inspection and a Special Inspection. Refer to table 14-1 for required inspection cycles.

14-292. Place-In-Service Inspection. The Place-In-Service Inspection shall be performed in accordance with paragraph 14-293, steps 1 and 3 thru 5.

14-293. Special Inspection. To perform the Special Inspection of the Dynamic Rope, proceed as follows:

WARNING

Failure to comply with proper maintenance on Dynamic Ropes could cause injury or death to user.

All Dynamic Ropes shall be taken out of service after an actual arrestment or after 18 months from the date placed in service.

NOTE

A Conditional Inspection shall be performed when the rope has had a possible overstressed occurrence.

1. Tag rope with local serial number and place-in-service date.

2. Verify serial number with history card and mark rope with the place-in-service date.

3. Remove any knots from rope and inspect entire length of rope for contaminants, rust spots, stains, cuts, tears, hard and soft spots, glazing and broken strands.

4. Inspect for natural elasticity.

5. Inspect storage bag for tears, cuts, contaminants and broken stitches.

6. Repair in accordance with paragraph 14-294.

7. Refer to paragraph 14-296 for stowage of ropes.

14-294. REPAIR. Repairs on ropes are limited to cleaning; all other discrepancies require removal of ropes from service. Refer to paragraph 14-295. Repairs of storage bag are limited to cleaning and repair of broken stitches, holes and tears. Unlimited repairs are authorized on bag, however, replace bag when no longer practical to repair.

14-295. CLEANING. To clean Dynamic Ropes and Storage Bags, proceed as follows:

Materials Required

Quantity	Description	Reference Number
As Required	Detergent, General Purpose	MIL-D-16791
As Required	Cloth, Lint-Free	MIL-C-85043

1. Rinse Dynamic Ropes and Storage Bags with clean water.

2. Using a cloth and a mixture of clean water and detergent, wipe contaminated area until area is clean.

3. Rinse a second time with fresh water to remove soap and contaminants.

4. Hang to dry.

14-296. STOWAGE. Use either of the following methods to stow Dynamic Ropes into Storage Bag.

1. Retie figure-eight knot in both ends.

2. Daisy-chain entire length of rope. Place in bag in an orderly fashion.

3. Fake entire rope into bag working back and forth until all rope is stowed.

Section 14-13.8. Static Rope With Storage Bag

To Be Provided

Section 14-13.9. Nylon Strap

14-297. DESCRIPTION.

14-298. The Nylon Strap (figure 14-39) is a 1-inch tubular strap. The Nylon Strap is used as a self-equalizing four-point anchor to which a separate rappel line can be attached.

14-299. MODIFICATION.

14-300. There are no modifications for the Nylon Strap that are required or authorized.

14-301. MAINTENANCE.

14-302. INSPECTION. The Nylon Strap shall be subjected to a Place-In-Service Inspection and a Special Inspection. Refer to table 14-1 for required inspection cycles.

14-303. Place-In-Service Inspection. The Place-In-Service Inspection shall be performed in accordance with paragraph 14-304, steps 1 thru 4.

14-304. Special Inspection. To perform the Special Inspection of the Nylon Strap, proceed as follows:

WARNING

Failure to comply with proper maintenance on Nylon Strap could cause injury or death to user.

NOTE

Nylon Straps are cut to specific lengths and configured according to SAR operations.

1. Newly fabricated Nylon Straps shall be serialized and marked with the place-in-service date. Annotate on history card.

2. Verify serial number with history card and mark strap with the place in service date. Nylon Straps shall be taken out of service after 24 months from the date placed in service.

3. Inspect for cuts, fraying, broken strands, hard and soft spots, rust spots and contaminants.

4. Inspect for natural elasticity.

5. Repair in accordance with paragraph 14-305.

14-305. REPAIR. Repairs are limited to cleaning. All other discrepancies require removal from service. Refer to paragraph 14-306.

14-306. CLEANING. To clean Nylon Strap, proceed as follows:

Materials Required

Quantity	Description	Reference Number
As Required	Detergent, General Purpose	MIL-D-16791
As Required	Cloth, Lint-Free	MIL-C-85043

1. Rinse Nylon Strap with clean water.

2. Using a cloth and a mixture of clean water and detergent, wipe contaminated area until area is clean.

3. Rinse a second time with fresh water to remove soap and contaminants.

4. Hang to dry.

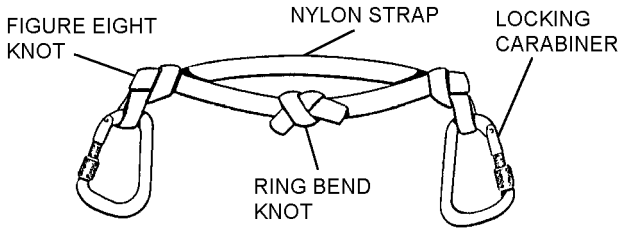

Figure 14-39. Nylon Strap

Section 14-14. Hoisting Vest (Full Body Fishnet)

14-307. DESCRIPTION.

14-308. The Hoisting Vest (figure 14-40) is a one piece vest made of a mesh material and designed to accommodate one person in overland rescues. It can be used to transport uninjured or ambulatory personnel from ship-to-helicopter or helicopter-to-ship. It can also be used over water when a flotation device is used.

14-309. MODIFICATION.

14-310. There are no modifications for the Hoisting Vest that are required or authorized.

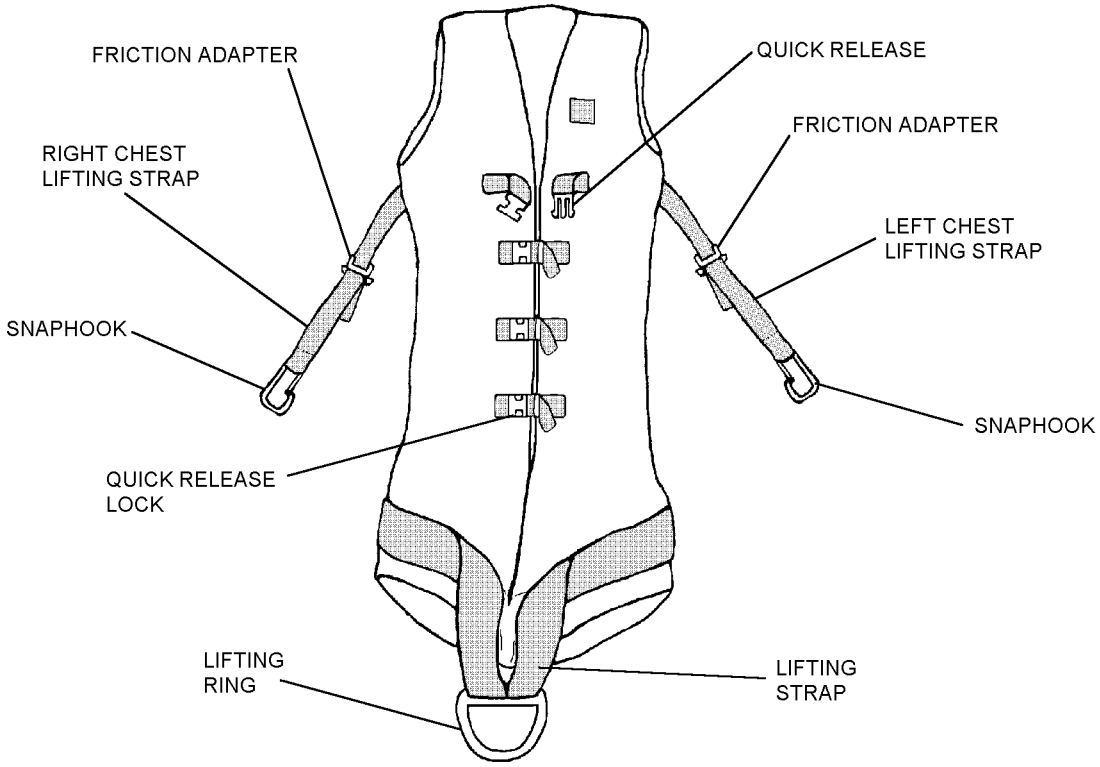

Figure 14-40. Hoisting Vest (P/N LSC207)

14-311. MAINTENANCE.

14-312. INSPECTION. The Hoisting Vest shall be subjected to a Place-In-Service Inspection and a Special Inspection. Refer to table 14-1 for required inspection cycles.

14-313. Place-In-Service Inspection. The Place-In-Service Inspection shall be performed in accordance with paragraph 14-314, steps 1 thru 4.

14-314. Special Inspection. To perform the Special Inspection of the Hoisting Vest, proceed as follows:

1. Inspect mesh material and webbing for cuts, tears and fraying.

2. Inspect all hardware for nicks, burrs, cracks, deformity, corrosion and ease of operation.

3. Inspect all stitching for loose, broken or fraying stitches.

4. Inspect for contaminants.

5. Repair in accordance with paragraph 14-315.

14-315. REPAIR. Repairs are limited to the following:

1. No more than three stitching repairs allowed on either the lifting strap or right and left chest lifting straps. No more than three broken stitches per repair.

2. No more than two stitching repairs allowed on any one of the 1-inch webbing attachments for quick release buckles. No more than three broken stitches per repair.

3. No repairs authorized on mesh material.

4. Clean in accordance with paragraph 14-316.

14-316. CLEANING. To clean Hoisting Vest, proceed as follows:

Materials Required

Quantity	Description	Reference Number
As Required	Detergent, General Purpose	MIL-D-16791
As Required	Cloth, Lint-Free	MIL-C-85043

1. Remove corrosion in accordance with NAVAIR 01-1A-509 manual.

2. Rinse Hoisting Vest with clean water.

3. Using a cloth and a mixture of clean water and detergent, wipe contaminated area until area is clean.

4. Rinse a second time with fresh water to remove soap and contaminants.

5. Hang to dry.

Section 14-15. Climber's Belt and Strap

14-317. DESCRIPTION.

14-318. The Climber's Belt and Strap (figure 14-41) is a device the rescuer uses to secure themselves to the tree for the climb.

14-319. MODIFICATION.

14-320. There are no modifications for the Climber's Belt and Strap that are required or authorized.

14-321. MAINTENANCE.

14-322. INSPECTION. The Climber's Belt and Strap shall be subjected to a Place-In-Service Inspection and a Special Inspection. Refer to table 14-1 for required inspection cycles.

14-323. Place-In-Service Inspection. The Place-In-Service Inspection shall be performed in accordance with paragraph 14-324, steps 1 through 3.

14-324. Special Inspection. To perform the Special Inspection of the Climber's Belt and Strap, proceed as follows:

1. Inspect all hardware for cracks, nicks, deformity, corrosion, security of attachment and ease of operation.

2. Inspect leather for dryness, cracks, tears and contamination.

3. Inspect stitching for broken, frayed stitches.

4. Repair in accordance with paragraph 14-325.

14-325. REPAIR. Repairs are limited to cleaning and conditioning leather. Refer to paragraph 14-326. Replace Climber's Belt and Strap as necessary.

14-326. CLEANING. To clean Climber's Belt and Strap, proceed as follows:

Materials Required

Quantity	Description	Reference Number
As Required	Leather Cleaner	Local Purchase
As Required	Leather Conditioner	Local Purchase
1	Gum Eraser	Available through GSA

1. Remove corrosion in accordance with NAVAIR 01-1A-509 manual.

2. Clean leather with a leather cleaner and condition leather with a leather conditioner. Follow manufacturer's instructions.

3. Small dirty areas that cannot be wiped off can be cleaned with a gum eraser.

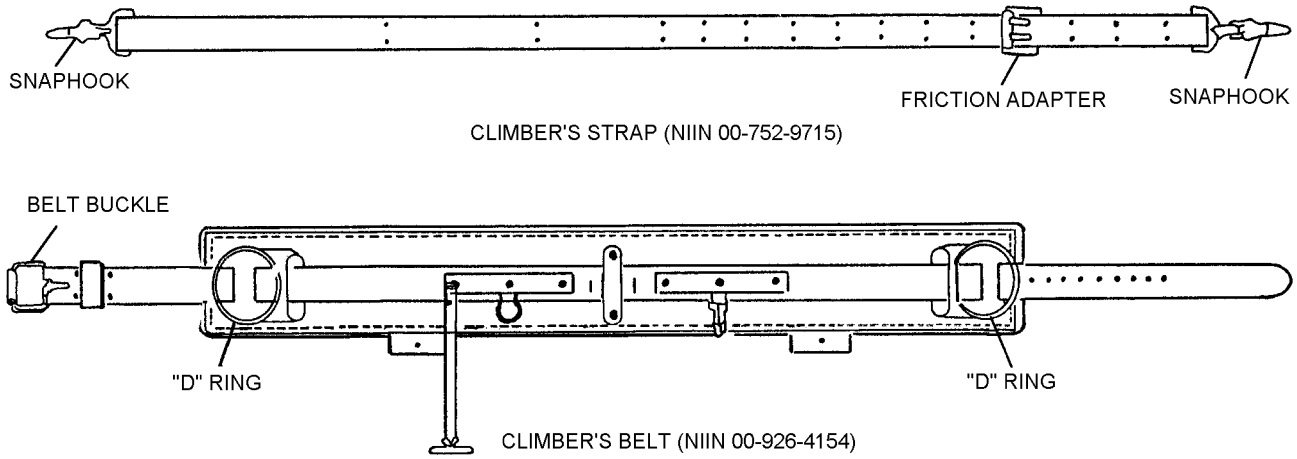

Figure 14-41. Climber's Belt and Strap

Section 14-16. Climber's Spikes

14-327. DESCRIPTION.

14-328. The Climber's Spikes (figure 14-42) is a strap with spike device which is attached around the wearer's leg and boot to assist in climbing a tree to extract a survivor.

14-329. MODIFICATION.

14-330. There are no modifications for the Climber's Spikes that are required or authorized.

14-331. MAINTENANCE.

14-332. INSPECTION. The Climber's Spikes shall be subjected to a Place-In-Service Inspection and a Special Inspection. Refer to table 14-1 for required inspection cycles.

14-333. Place-In-Service Inspection. The Place-In-Service Inspection shall be performed in accordance with paragraph 14-334, steps 1 thru 4.

14-334. Special Inspection. To perform the Special Inspection of the Climber's Spikes, proceed as follows:

WARNING

Remove Climber's Spikes from service if there are any signs of damage or deterioration. Never alter the straps or spikes.

1. Inspect leather straps for signs of burns, cuts, broken stitches, dryness, cracking and wear.

2. Inspect spikes and shanks for dents, gouges, scratches and corrosion.

3. Inspect for bent, loose or missing rivets.

4. Inspect buckles for distortion and ease of operation.

5. Repair in accordance with paragraph 14-335.

14-335. REPAIR. Repairs are limited to the removal of corrosion, cleaning and conditioning of leather parts. Refer to paragraph 14-336. Replace Climber's Spikes as necessary.

14-336. CLEANING. To clean Climber's Spikes, proceed as follows:

Materials Required

Quantity	Description	Reference Number
As Required	Leather Cleaner	Local Purchase
As Required	Leather Conditioner	Local Purchase
1	Gum Eraser	Available through GSA

1. Remove corrosion in accordance with NAVAIR 01-1A-509 manual.

2. Clean leather with a leather cleaner and condition leather with a leather conditioner. Follow manufacturer's instructions.

3. Small dirty areas that cannot be wiped off can be cleaned with a gum eraser.

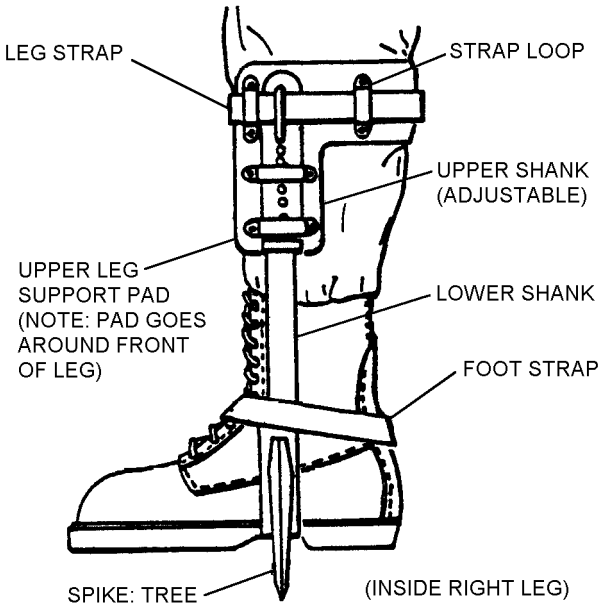

014042

Figure 14-42. Climber's Spikes

Section 14-17. Climber's Helmet and Headlamp

14-337. DESCRIPTION.

14-338. The Climber's Helmet and Headlamp (figure 14-43) are used for overland rescues. It protects the wearer from falling rocks, ice and other obstacles. The Headlamp provides hands free lighting for nighttime rescues.

14-339. MODIFICATION.

14-340. There are no modifications for the Climber's Helmet or Headlamp that are required or authorized.

14-341. MAINTENANCE.

14-342. INSPECTION. The Climber's Helmet and Headlamp shall be subjected to a Place-In-Service Inspection and a Special Inspection. Refer to table 14-1 for required inspection cycles.

14-343. Place-In-Service Inspection. The Place-In-Service Inspection shall be performed in accordance with paragraph 14-344, steps 1b-e and 2a-c.

14-344. Special Inspection. To perform the Special Inspection of the Climber's Helmet and Headlamp, proceed as follows:

WARNING

Helmets shall be replaced after a serious impact even if they do not show outward signs of damage. UV radiation deteriorates helmet materials, helmets shall be removed from service after 5 years.

1. Helmet:

a. Inspect helmet for cracks, dents or damages.

b. Inspect head and chin straps for signs of contamination, wear and tearing.

c. Inspect buckles for damage and ease of operation.

d. Inspect head and ear cushions for damage and wear.

e. (Place-In-Service Only) Mark inside of helmet with the place in service date.

f. Repair in accordance with paragraph 14-345.

2. Headlamp:

a. Inspect headlamp light and battery compartments for signs of damage and corrosion.

b. (Place-in-Service Only) Install batteries and test headlamp for proper operation. Annotate expiration of batteries on history card.

c. Inspect headband and hardware for signs of damage, contamination and wear.

d. Inspect batteries for expiration date.

e. Turn light on to ensure headlamp is operable.

f. Repair in accordance with paragraph 14-345.

g. Clean in accordance with paragraph 14-346.

14-345. REPAIR. Repairs are limited to cleaning. Refer to paragraph 14-346. Replace as necessary.

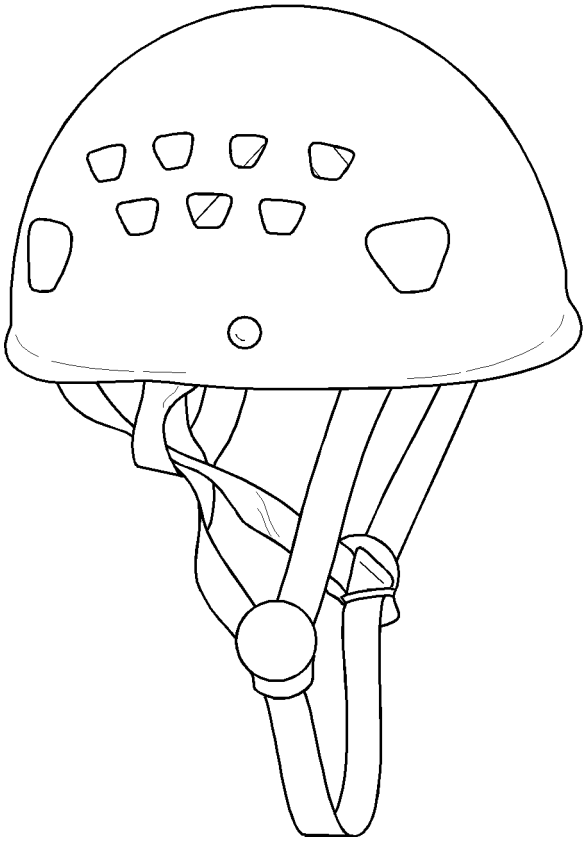

014043

Figure 14-43. Climber's Helmet and Headlamp

14-346. CLEANING. To clean Climbers Helmet and Headlamp, proceed as follows:

Materials Required

Quantity	Description	Reference Number
As Required	Detergent, General Purpose	MIL-D-16791
As Required	Cloth, Lint-Free	MIL-C-85043

1. Dampen a cloth with a mixture of clean water and detergent and wipe contaminated area until area is clean.

2. Rinse cloth with fresh water and wipe area again to remove any soap residue.

3. Let dry before returning to service.

Section 14-18. V-Bladed Rescue Knife

14-347. DESCRIPTION.

14-348. The Rescue Knife (figure 14-44) is a 10-inch by 5-inch wide device which consists of a dzus fastener remover on one end and can be used to cut webbing or other cloth materials up to 1/4 inch thick. It can be used as a replacement to the Pnuematic Rescue tool.

14-349. MODIFICATION.

14-350. There are no modifications for the V-Bladed Rescue Knife that are required or authorized.

14-351. MAINTENANCE.

14-352. INSPECTION. The V-Bladed Rescue Knife shall be subjected to a Place-In-Service Inspection and a Special Inspection. Refer to table 14-1 for required inspection cycles.

14-353. Place-In-Service Inspection. The Place-In-Service Inspection shall be performed in accordance with paragraph 14-354, steps 1 thru 3.

14-354. Special Inspection. To perform the Special Inspection of the V-Bladed Rescue Knife, proceed as follows:

WARNING

Blades are sharp and can cause injury. Use caution when handling and stowing.

1. Inspect for damage, corrosion and contamination.

2. Inspect blade for nicks, burrs.

3. Inspect screws for security of attachment.

4. Repair in accordance with paragraph 14-355.

14-355. REPAIR. Repairs are limited to the removal of corrosion, cleaning and replacement of blades. Replace Rescue Knife as necessary.

14-356. Replacement of Blades. To replace the blades, proceed as follows:

1. Remove screws.

2. Slide out old blades and replace with new ones.

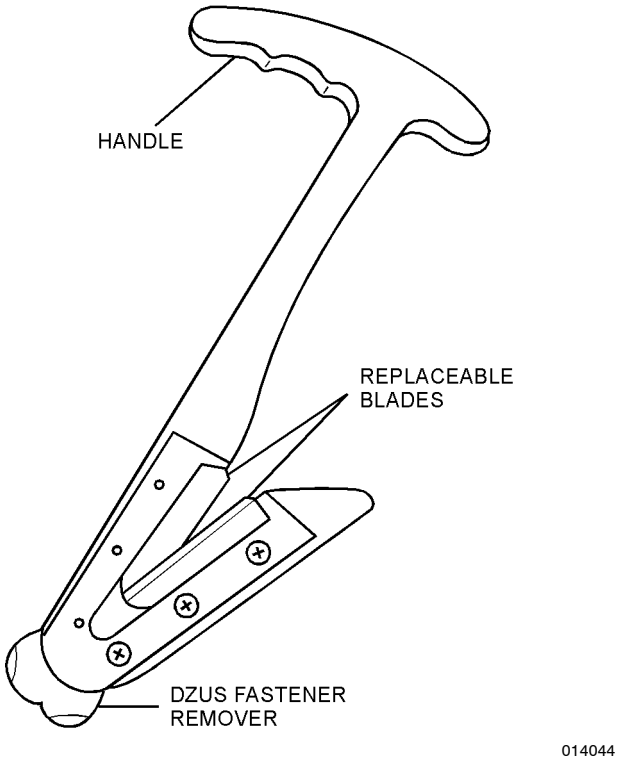

Figure 14-44. V-Bladed Rescue Knife

3. Replace screws. Ensure that they are secure.

14-357. CLEANING. To clean the V-Bladed Rescue Knife, proceed as follows:

Materials Required

Quantity	Description	Reference Number
As Required	Detergent, General Purpose	MIL-D-16791
As Required	Cloth, Lint-Free	MIL-C-85043

1. Remove corrosion in accordance with NAVAIR 01-1A-509 manual.

2. Rinse Rescue Knife with clean water.

3. Using a cloth and a mixture of clean water and detergent, wipe contaminated area until area is clean.

4. Rinse a second time with fresh water to remove soap and contaminants.

5. Dry with clean cloth.

Section 14-19. Rescue 8

14-358. DESCRIPTION.

14-359. The Rescue 8 (figure 14-45) is a device designed for high-angle rescue work. It accommodates both large and heavy-duty ropes. Made of hot-forged 6061 T-6 aircraft-quality aluminum and has a minimum breaking strength of 10,000 pounds.

14-360. MODIFICATION.

14-361. There are no modifications for the Rescue 8 that are required or authorized.

14-362. MAINTENANCE.

14-363. INSPECTION. The Rescue 8 shall be subjected to a Place-In-Service Inspection and a Special Inspection. Refer to table 14-1 for required inspection cycles.

14-364. Place-In-Service Inspection. The Place-In-Service Inspection shall be performed in accordance with paragraph 14-365, step 1.

14-365. Special Inspection. To perform the Special Inspection of the Rescue 8, proceed as follows:

1. Inspect for nicks, burrs, deformity, corrosion and contamination.

2. Repair in accordance with paragraph 14-366.

14-366. REPAIR. Repairs are limited to the removal of corrosion and cleaning. Replace Rescue 8 as necessary.

14-367. CLEANING. To clean the Rescue 8, proceed as follows:

Materials Required

Quantity	Description	Reference Number
As Required	Detergent, General Purpose	MIL-D-16791
As Required	Cloth, Lint-Free	MIL-C-85043

1. Remove corrosion in accordance with NAVAIR 01-1A-509 manual.

2. Rinse Rescue 8 with clean water.

3. Using a cloth and a mixture of clean water and detergent, wipe contaminated area until area is clean.

4. Rinse a second time with fresh water to remove soap and contaminants.

5. Dry with clean cloth.

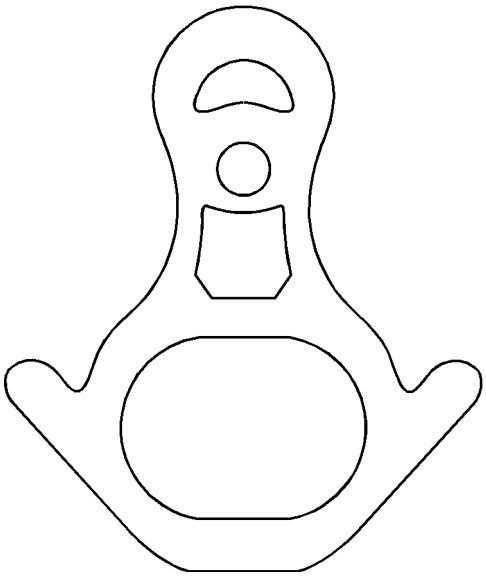

014045

Figure 14-45. Rescue 8

Section 14-20. Sven Folding Saw

14-368. DESCRIPTION.

14-369. The Sven Folding Saw (figure 14-46) is a 21-inch collapsible aluminum saw with a stainless steel blade that can cut a 5-inch diameter tree limb.

14-370. MODIFICATION.

14-371. There are no modifications for the Folding Saw that are required or authorized.

14-372. MAINTENANCE.

14-373. INSPECTION. The Folding Saw shall be subjected to a Place-In-Service Inspection and a Special Inspection. Refer to table 14-1 for required inspection cycles.

14-374. Place-In-Service Inspection. The Place-In-Service Inspection shall be performed in accordance with paragraph 14-375, steps 1 and 2.

14-375. Special Inspection. To perform the Special Inspection of the Folding Saw, proceed as follows:

WARNING

Blade is sharp and can cause injury. Use caution when handling and stowing.

1. Inspect for damage, corrosion and contamination.

2. Inspect blade for nicks, cracks and wear.

3. Repair in accordance with paragraph 14-376.

14-376. REPAIR. Repairs are limited to the removal of corrosion, cleaning and replacement of blade. Refer to table 14-1 for replacement blade. Replace saw as necessary.

14-377. CLEANING. To clean the Folding Saw, proceed as follows:

Materials Required

Quantity	Description	Reference Number
As Required	Detergent, General Purpose	MIL-D-16791
As Required	Cloth, Lint-Free	MIL-C-85043

1. Remove corrosion in accordance with NAVAIR 01-1A-509 manual.

2. Rinse Folding Saw with clean water.

3. Using a cloth and a mixture of clean water and detergent, wipe contaminated area until area is clean.

4. Rinse a second time with fresh water to remove soap and contaminants.

5. Dry with clean cloth.

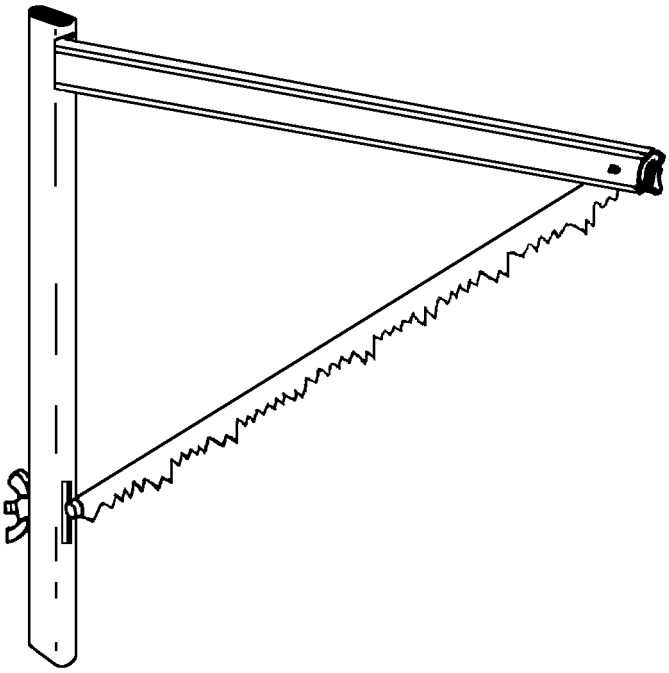

014046

Figure 14-46. Sven Folding Saw

Section 14-21. Rescue Pulleys

14-378. DESCRIPTION.

14-379. Rescue Pulleys (figure 14-47) are used in conjunction with rappel/belay rigging equipment for overland rescue operations. Two types of pulleys are used, single and double pulley system. Heavy duty heat-treated aluminum alloy wheels make them lightweight and durable.

14-380. MODIFICATION.

14-381. There are no modifications for the Rescue Pulleys that are required or authorized.

14-382. MAINTENANCE.

14-383. INSPECTION. The Rescue Pulleys shall be subjected to a Place-In-Service Inspection and a Special Inspection. Refer to table 14-1 for required inspection cycles.

14-384. Place-In-Service Inspection. The Place-In-Service Inspection shall be performed in accordance with paragraph 14-385, steps 1 thru 4.

14-385. Special Inspection. To perform the Special Inspection of the Rescue Pulleys, proceed as follows:

NOTE

The pulleys bushings and ball bearings are permanently lubricated. No lubrication is required. No disassembly of pulleys is authorized.

1. Inspect wheel assembly for ease of rotation and excessive visible wearing of wheel runner.

2. Inspect for corrosion, contamination and damage.

3. Inspect for cracks, nicks and sharp edges.

4. Inspect axle nuts for proper alignment of blue witness line.

5. Repair in accordance with paragraph 14-386.

NOTE

Corroded pulleys shall be replaced.

14-386. REPAIR. Repairs are limited to cleaning only. Replace pulleys as necessary.

14-387. CLEANING. To clean the Rescue Pulleys, proceed as follows:

Materials Required

Quantity	Description	Reference Number
As Required	Detergent, General Purpose	MIL-D-16791
As Required	Cloth, Lint-Free	MIL-C-85043

1. Rinse Rescue Pulleys with clean water.

2. Using a cloth and a mixture of clean water and detergent, wipe contaminated area until area is clean.

3. Rinse a second time with fresh water to remove soap and contaminants.

4. Dry with clean cloth.

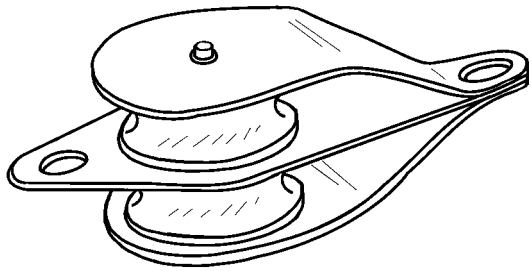

P/N 315500

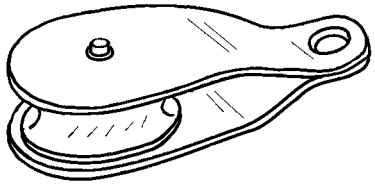

P/N 315000

014047

Figure 14-47. Rescue Pulleys P/Ns 315000 and 315500

Section 14-22. Entrenching Tool

14-388. DESCRIPTION.

14-389. The Entrenching Tool (figure 14-48) is used to dig at crash sites, put out fires or make survival shelters.

14-390. MODIFICATION.

14-391. There are no modifications for the Entrenching Tool that are required or authorized.

14-392. MAINTENANCE.

14-393. INSPECTION. The Entrenching Tool shall be subjected to a Place-In-Service Inspection and a Special Inspection. Refer to table 14-1 for required inspection cycles.

14-394. Place-In-Service Inspection. The Place-In-Service Inspection shall be performed in accordance with paragraph 14-395, steps 1 and 2.

14-395. Special Inspection. To perform the Special Inspection of the Entrenching Tool, proceed as follows:

1. Inspect for damage, corrosion and contamination.

2. Inspect serrated and smooth blade edge for missing teeth, nicks, burrs, cracks and wear.

3. Repair in accordance with paragraph 14-396.

14-396. REPAIR. Repairs are limited to the removal of corrosion, cleaning and sharpening of blade.

1. Use a file to remove nicks, burrs and sharpen smooth edge of blade. Serrated edge cannot be sharpened.

14-397. CLEANING. To clean the Entrenching Tool, proceed as follows:

Materials Required

Quantity	Description	Reference Number
As Required	Detergent, General Purpose	MIL-D-16791
As Required	Cloth, Lint-Free	MIL-C-85043

1. Remove corrosion in accordance with NAVAIR 01-1A-509 manual.

2. Rinse Entrenching Tool with clean water.

3. Using a cloth and a mixture of clean water and detergent, wipe contaminated area until area is clean.

4. Rinse a second time with fresh water to remove soap and contaminants.

5. Dry with clean cloth.

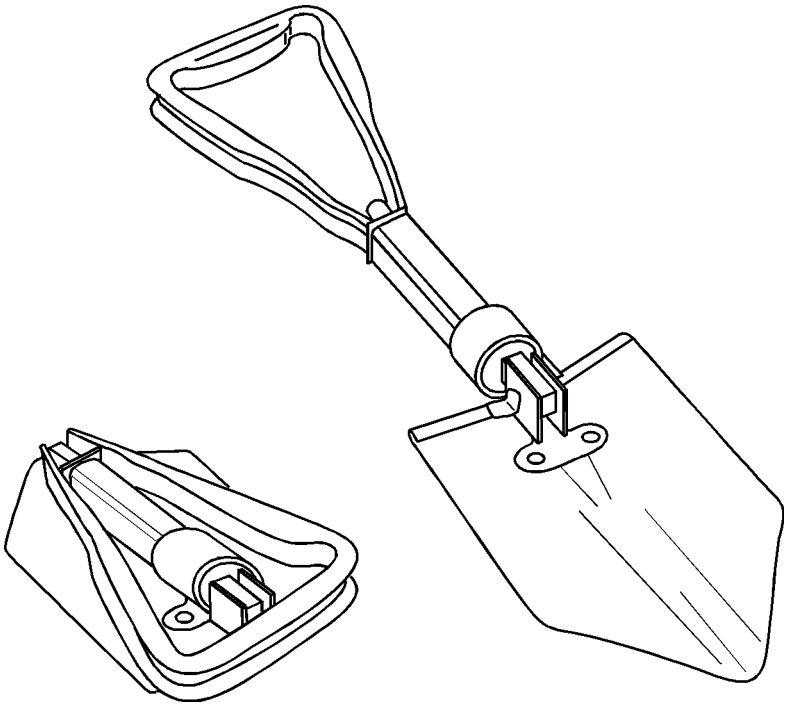

014048

Figure 14-48. Entrenching Tool

Section 14-23. SAR Medical Kit, Level A/B/C

14-398. DESCRIPTION.

14-399. The Level A and Level B SAR Medical Kits (figure 14-49) are designed for all helicopter commands with SAR capability. The Level B SAR Medical Kit is designed to be used in conjunction with the Level A Medical Kit when a SAR Medical Technician with NEC 8401 is utilized. The Level C Medical Kit is for HCS-4 and HCS-5 use only.

14-400. MODIFICATION.

14-401. There are no modifications for the Level A, B or C Medical Kits that are required or authorized.

14-402. MAINTENANCE.

14-403. INSPECTION. The Level A, B and C Medical Kits shall be subjected to a Place-In-Service Inspection and a Special Inspection. Refer to table 14-1 for required inspection cycles.

14-404. Place-In-Service Inspection. The Place-In-Service Inspection shall be performed in accordance with paragraph 14-405, steps 1 thru 3.

14-405. Special Inspection. To perform the Special Inspection of the Level A, B and C Medical Kits, proceed as follows:

1. Inspect Level A, B or C bag for contamination, cuts, tears, broken stitches and fraying.

2. Inspect hardware for damage, proper operation and security of attachment.

NOTE

Inspection and replacement of Level B and C medical items shall be the responsibility of the SAR Corpsman or qualified medical personnel.

3. Inspect medical items (Level A only) for damage, deterioration and expiration dates. Replace damaged or expired items.

NOTE

Medical items cannot expire during a repack cycle.

4. Repair in accordance with paragraph 14-406.

14-406. REPAIR. Repair of the bag shall consist of patching of minor tears, stitching of broken or fraying stitches, patching of tears or cuts and the replacement of medical items. Unlimited repairs of bags are authorized, however replace bag when no longer practical to repair.

14-407. CLEANING. To clean the bag, proceed as follows:

Materials Required

Quantity	Description	Reference Number
As Required	Detergent, General Purpose	MIL-D-16791
As Required	Cloth, Lint-Free	MIL-C-85043

1. Rinse bag with clean water.

2. Using a cloth and a mixture of clean water and detergent, scrub or wipe contaminated area until area is clean.

3. Rinse a second time with fresh water to remove soap and contaminants.

4. Hang to dry.

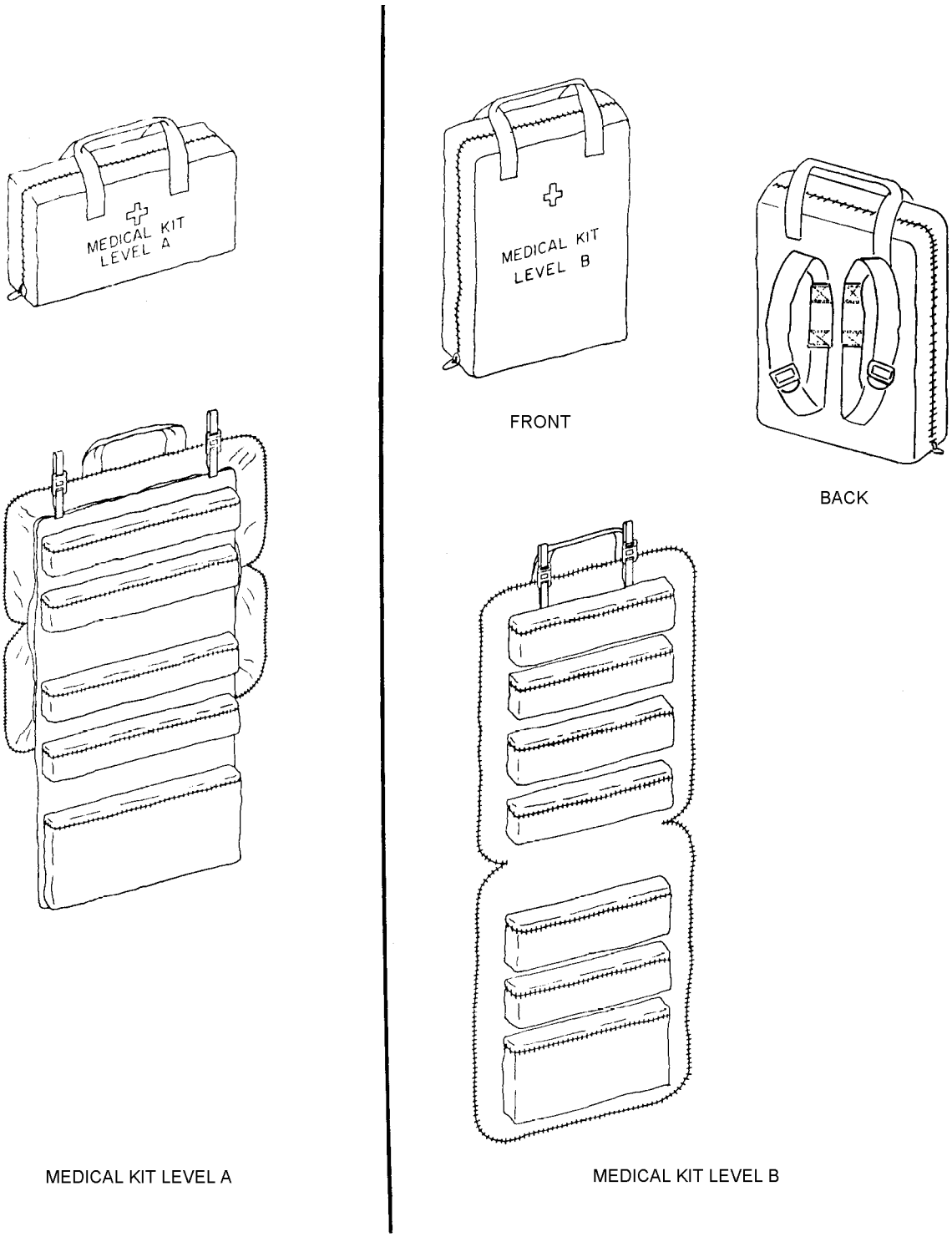

NOTE: REFER TO NWP 3-50.1 FOR CONTENTS OF KITS

014049

Figure 14-49. Level A, Level B and Level C Medical Kits (Sheet 1 of 2)

MEDICAL KIT LEVEL C
(HCS-4 AND HCS-5 USE ONLY)

MEDICAL KIT LEVEL C FRONT OPEN

MEDICAL KIT LEVEL C BACK OPEN

Figure 14-49. Level A, Level B and Level C Medical Kits (Sheet 2)

THIS PAGE INTENTIONALLY LEFT BLANK.

Section 14-24. SAR Aircrewmember Personal Equipment

14-408. GENERAL.

14-409. Refer to the appropriate Chapter in this manual for inspection of the individual survival items for the TRI-SAR Harness and HBU-23/P.

Section 14-24.1. TRI-SAR Harness Assembly

14-410. DESCRIPTION.

WARNING

Deleted

14-411. The TRI-SAR Harness (figure 14-50) with flotation provides a slightly reclined seated position allowing total use of the rescuer's hands. The flotation vest provides a minimum of 35 pounds of buoyancy. The flotation vest accommodates all required survival items and can be removed easily for maintenance. The harness is available in five sizes (table 14-11).

14-412. MODIFICATION.

14-413. There are no modifications for the TRI-SAR Harness that are required or authorized.

14-414. MAINTENANCE.

14-415. INSPECTION. The TRI-SAR Harness Assembly shall be subjected to Place-In-Service, Preflight/Postflight, and Special Inspections.

NOTE

Refer to Chapters 9, 11, 12 and 13 of this manual for inspection of survival items.

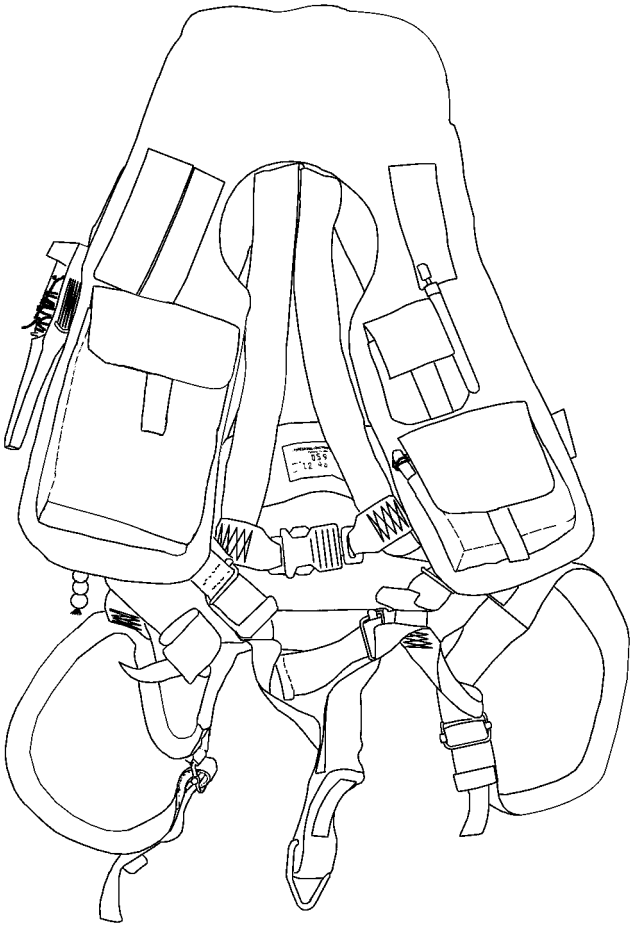

014050

Figure 14-50. TRI-SAR Harness Assembly, P/N 487

Table 14-11. Sizing Guidelines for TRI-SAR Harness Assembly

Size	Weight (Lbs)	Height (In)
Small	110 to 140	less than 64
Medium	130 to 170	64 to 69
Large	160 to 185	69 to 73
X-Large	170 to 225	72 to 78
XX-Large	200 to 300	74 to 80
Notes: 1. Size Small is normally not stocked but can be manufactured upon receipt of order. Delivery time may be longer for the size Small items than for the other sizes.		

14-416. Place-In-Service Inspection. A Place-In-Service Inspection for the TRI-SAR Harness Assembly shall consist of the following:

Materials Required

Quantity	Description	Reference Number
4	Locking Nut (Note 1)	H089
As Required	Phillips Head Machine Screw (Note 1)	H090
As Required	Torque Seal (Sealant)	F-900

Notes: 1. Available open purchase from the following source:
Lifesavings Systems Corp.
220 Elsberry Rd.
Apollo Beach, FL 33572-2289
(813) 645-2748
Fax: (813) 645-2768.

Support Equipment Required

Quantity	Description	Reference Number
As Required	11/32 Inch Open-end or Socket Wrench	—
As Required	Phillips Screwdriver	—
As Required	Torque Wrench 10-50 in-lb	—

NOTE

Future procurements of the TRISAR Harness Assembly will come with the flotation vest detached from the harness. Locking nuts and screws will be provided separately. This will reduce man-hour and part costs.

1. (For attached flotation assemblies) Remove flotation vest from harness by removing the four screws from the connecting links located on back of flotation vest and remove harness webbing from the flotation vest webbing keepers. Retain screws for re-assembly and dispose of locking nuts.

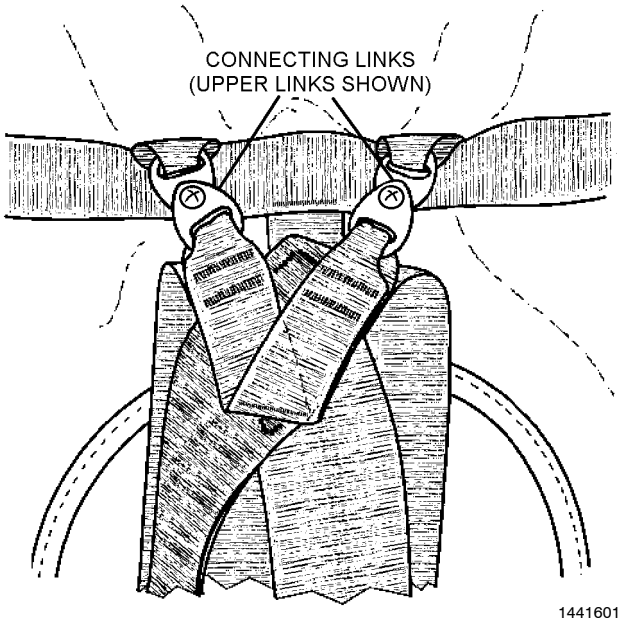

Step 1 - Para 14-416

2. Forward the flotation vest to Intermediate Level maintenance for Place-In-Service Inspection.

3. Inspect the harness for cuts, tears, open seams, loose or broken stitching.

WARNING

Ensure bayonet fitting locks into the buckle and does not release until both buckle releases are pressed at the same time.

4. Inspect all hardware for corrosion, damage, wear, security of attachment and ease of operation.

5. Inspect material and webbing for contamination.

6. Perform service life check of harness in accordance with paragraph 14-419.

7. Rig and pack inspected flotation vest in accordance with paragraph 14-422.

NOTE

Ensure screw heads face flotation vest to avoid abrasion.

8. Re-attach flotation vest utilizing the screws and locking nuts. Place harness connecting links on top of flotation vest connecting links and align metal connecting links so that pointed ends face each other. Install screws with the heads facing flotation vest. Torque screws 20 to 25 in-lb and tamper dot each locking nut.

9. Record inspection on appropriate forms in accordance with COMNAVAIRFORINST 4790.2.

14-417. Preflight/Postflight Inspection. It is the aircrewmember's responsibility to clean the TRI-SAR Harness Assembly after every immersion in salt/fresh water. Inspect the TRI-SAR Harness Assembly as follows:

1. Inspect all components of the TRI-SAR Harness Assembly for cuts, tears, open seams, loose or broken stitching, and contamination.

WARNING

Ensure bayonet fitting locks into the buckle and does not release until both buckle releases are pressed at the same time.

2. Inspect all hardware for corrosion, cracks, security of attachment, and ease of operation. Inspect for presence of tamper dot on flotation attachment screws.

3. Check to ensure red beaded actuating handle is snapped into place and extends down from the lower right lobe on the flotation vest.

4. Inspect for presence of survival items and proper operation of strobe light and survival radio.

5. For TRISAR assemblies with Emerson SAR Knife installed.

a. Open knife and check for side to side play on knife blade.

b. Check knife for missing or loose screws. There are nine screws.

c. Inspect lanyard for fraying.

d. Discrepancies shall be reported to maintenance personnel.

6. Inspect for the presence of safety wire on inflation assembly.

7. Clean TRI-SAR Harness Assembly as required in accordance with paragraph 14-421.

8. Report any discrepancies to maintenance personnel.

14-418. Special Inspection TRI-SAR Harness Assembly (90-Day). A Special 90-Day Inspection shall be performed by Organizational Level maintenance or above on the TRI-SAR Harness Assembly. Inspect the TRI-SAR Harness Assembly as follows:

Materials Required

Quantity	Description	Reference Number
4	Locking Nut (Note 1)	H089
As Required	Phillips Head Machine Screw (Note 1)	H090
As Required	Torque Seal (Sealant)	F-900
As Required	Corrosion Preventive	NIIN 01-381-6357

Notes: 1. Available open purchase from the following source:
Lifesavings Systems Corp.
220 Elsberry Rd.
Apollo Beach, FL 33572-2289
(813) 645-2748
Fax: (813) 645-2768

Support Equipment Required

Quantity	Description	Reference Number
As Required	11/32 Inch Open-end or Socket Wrench	—
As Required	Phillips Screwdriver	—
As Required	Torque Wrench 10-50 in-lb	—

THIS PAGE INTENTIONALLY LEFT BLANK.

1. Remove flotation vest from harness by removing the four screws from the connecting links located on back of flotation vest and remove harness webbing from the flotation vest webbing keepers.

2. Remove survival items and forward flotation vest to Intermediate Level maintenance for 90-Day Special Inspection. Retain screws for re-assembly and dispose of locking nuts.

3. Inspect the harness for cuts, tears, open seams, and loose or broken stitching.

WARNING

Ensure bayonet fitting locks into the buckle and does not release until both buckle releases are pressed at the same time.

4. Inspect all hardware for corrosion, damage, wear, security of attachment, and ease of operation.

5. Inspect material and webbing for contamination.

NOTE

If contamination is suspected, test in accordance with paragraph 14-420.

6. Clean harness as necessary to remove stains, dirt, grease, perspiration, or other contaminants. Refer to paragraph 14-421.

7. Verify service life of harness in accordance with paragraph 14-419.

8. Inspect survival items in accordance with applicable chapter of this manual.

9. Rig and pack flotation vest in accordance with paragraph 14-422.

NOTE

Ensure screw heads face flotation vest to avoid abrasion.

10. Re-attach inspected flotation vest utilizing the retained screws and new locking nuts. Place harness connecting links on top of flotation vest connecting links and align metal connecting links so that pointed ends face each other. Install screws with the heads facing flotation vest. Torque screws 20 to 25 in-lb and tamper dot each locking nut.

11. Record inspection on appropriate forms in accordance with COMNAVAIRFORINST 4790.2.

14-419. HARNESS SERVICE LIFE CHECK. The service life of the harness is 7 years from the date it was placed into service and 12 years from date of manufacturer which ever occurs first. When the harness reaches its service life limit, it shall be removed from service. The service life check is performed as follows:

NOTE

Use a light color marking ink or equivalent to stencil the harness. Do not use a dark color that will not show up on harness.

1. When a harness is placed in service, the start date shall be stenciled on the inside of the back strap using light-colored marking ink. The date shall be indicated by month and year.

2. When an in-service harness lacks a start of service date, service life shall expire 7 years from the date of manufacturer.

3. The manufacturer's date is located on a manufacturer's tag on the inside of the back strap.

NOTE

If manufacturer's tag becomes worn, loose, or torn, stencil manufacturer's date on inside of back strap.

14-420. CONTAMINATION INSPECTION. Fabric and webbing material suspected of contamination shall be tested with pH test paper. A pH reading of 5.0 to 9.0 is in the safe zone. Readings below 5.0 indicate excess acidity, and readings above 9.0 indicate excess alkalinity. Inspect for acid or alkaline contamination as follows:

Materials Required

Quantity	Description	Reference Number
As Required	Distilled or Potable Water	Local Procurement
As Required	Test Kit Alkacid	A-988 NIIN 00-420-0507

CAUTION

Ensure that testing area is free of contaminants to avoid false readings or damage to assembly.

1. Dampen suspected area with potable or distilled water.

NOTE

Handle test paper by the edge to avoid false readings.

2. Place a piece of full-range test paper (0.0 to 14.0) on dampened area. A color change will indicate the approximate pH value and the specific short-range test paper to be used.

3. Place short-range test paper on dampened area. The color change indicates the pH factor of affected area. By matching test strip with applicable range color chart, the acid or alkaline strength can be determined.

4. If acid contamination is found, the item shall be removed from service.

5. If alkaline contamination is found, the item shall be rinsed in cool potable water and retested until a safe reading is obtained. All fabric and webbing shall be carefully inspected for any signs of deterioration.

14-421. CLEANING. The components of the TRI-SAR Harness Assembly shall be cleaned after every immersion in salt-fresh water and as often as necessary to remove dirt, perspiration stains, grease, or other contaminants, which may degrade performance. Clean each component as follows:

Materials Required

Quantity	Description	Reference Number
As Required	Cloth, Lint-free	MIL-C-85043
As Required	Mild Soap, Ivory	Local Procurement

1. Soak in tub of cool potable water for two or three hours to loosen any set stains or dirt.

2. Remove from water, hang on wooden hanger, and let excess water drain off.

3. Immerse again in tub of clean potable water not to exceed 200°F. Gently agitate by hand.

NOTE

Petroleum and other stubborn stains may be removed by repeated applications of mild soap and warm water by gently scrubbing with a lint free cloth. Rinse thoroughly.

4. After 5 to 10 minutes, remove from water, and hang on wooden hanger and let excess water drain off.

5. Repeat steps 3 and 4 twice.

6. After third rinse, allow to dry completely in a well-ventilated area.

14-421.1. ADDITION OF PILE TAPE FASTENER, (OPTIONAL). The addition of pile tape to the lower survival pockets on the TRISAR floatation assembly is to prevent loss of the chemlights and other survival items during a rescue. The addition of pile tape shall be accomplished at intermediate level maintenance at the next scheduled inspection.

NOTE

Addition of pile tape to the lower survival pockets is optional, and shall only be accomplished on TRISAR harness assemblies manufactured prior to August 2004. TRISAR harness assemblies manufactured after August 2004 will have the hook tape relocated to prevent loss of survival items.

Materials Required

Quantity	Description	Reference Number
As Required	Fastener Tape Pile, 1-inch Black	MIL-F-21840 NIIN 00-978-0113

1. Open lower pockets and measure length of current fastener pile tape on pocket flaps.

2. Cut the required lengths of 1-inch pile tape. Place the 1-inch pile tape against the edge of the current pile tape on flap and sew in place, backstitch 3/4 of an inch.

14-422. RIGGING AND PACKING.

14-423. Inspect survival items in accordance with applicable chapter of this manual. To rig and pack the TRI-SAR Harness Assembly, proceed as follows (figure 14-51):

Materials Required

Quantity	Description	Reference Number
As Required	Cord, Nylon Type I (with core strands removed) or Type IA (Coreless)	MIL-C-5040
1	Light, Marker Distress, SDU-39/N	(Note 1)
2	Signal, Smoke and Illumination, Marine, MK-124 MOD 0	(Note 1)
1	Knife, Hook Blade	(Note 1)

Materials Required (Cont.)

Quantity	Description	Reference Number
1	Knife and Scabbard, Diver's	(Note 1)
1	Emerson SAR Knife with Hook Blade	(Notes 1, 2, 3, 4)
2	Chemical Light 6 Inch	(Note 1)
2	Chemical Light 4 Inch	(Note 1)
1	AN/PRC-125 or AN/PRC-149 with C-12631/ PRC-149 Swimmer's Control Unit	—

Note 1. Refer to table 14-1 for procurement information.
2. The Emerson SAR Knife is an alternate replacement to the current diver's knife with scabbard and hook blade knife for the TRI-SAR Harness Assembly only.
3. Funding for the Emerson SAR Knife shall be the sole responsibility of the local SAR command.
4. Refer to paragraph 14–423A for installation of Emerson SAR Knife.

1. Cut an 80-inch length of Type I or IA nylon cord and sear ends. Tie an overhand knot at each end of cord. Wrap cord two turns around one end of MK-124 MOD 0 flare and tie with surgeon's knot. Turns of cord shall overlap with all knots positioned snugly against each other. Route cord to opposite end of signal flare and tie in same manner as above. Cord between ties shall be drawn tight. Secure other end of cord to the left loop located inside the lower left-hand pocket of the flotation vest using a bowline knot. Fake excess cord along length of flare and secure with a rubber band. Install signal flare into the pocket. Repeat procedure for the other flare.

THIS PAGE INTENTIONALLY LEFT BLANK.

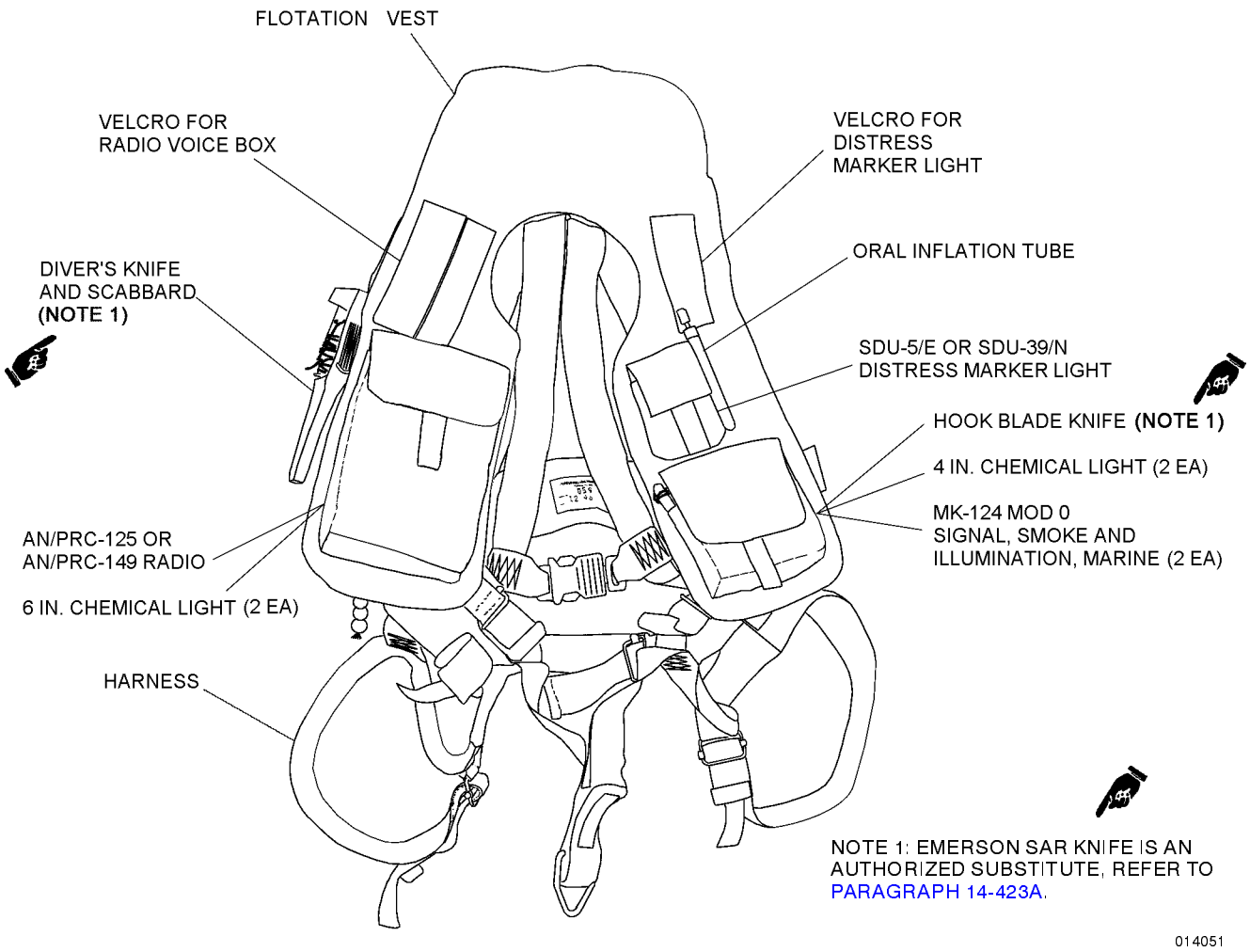

Figure 14-51. TRI-SAR Vest Survival Item Locations

2. Cut a 48-inch length of Type I or IA nylon cord and sear ends. Tie an overhand knot at each end of cord. Pass one end through the grommet in the handle of the hook blade knife and secure with a bowline knot. Secure the other end of the cord to the right loop located inside the lower left hand pocket of the flotation vest using a bowline knot. Fake the excess cord along the length of the hook blade knife and secure with a rubber band. Install hook blade knife into pocket.

3. Configure Distress Marker Light in accordance with Chapter 12. Cut a 48-inch length of Type I or IA nylon cord and sear ends. Pass one end through the hole below the on-off switch of the SDU-39/N, tie end with overhand knot and secure using a bowline knot. Tie an overhand knot at the opposite end of the cord and secure to the loop located inside the small upper left hand pocket of the flotation vest using a bowline knot. Fake cord and secure with rubber band. Install strobe light into pocket with dome facing down and secure pocket flap.

4. Locate the three-inch piece of webbing with snaps located between the folds on the right side of the flotation vest. Weave webbing through the two elongated slots in the knife sheath. Ensure blade end is facing down. Secure snaps. Cut a 48-inch length of Type I or IA nylon cord and sear ends. Pass one end through the hole located at the top of the knife handle, tie end with overhand knot and secure using a bowline knot. Route the other end of the cord through the bottom of the two elongated slots on sheath below the attachment webbing. Tie end with overhand knot and secure using a bowline knot. Fake remaining cord along backside of knife and secure with rubber band. Stow knife in sheath and secure blade end of sheath by securing the two velcro tabs located inside the fold of flotation vest.

5. Install two 4-inch chemical lights in the same pocket as the hook blade knife. Secure pocket flap.

6. Install two 6-inch chemical lights in the left side of large pocket located on the lower right side of the flotation vest.

NOTE

Ensure chemical light protective wrappers are not torn or punctured.

7. (For AN/PRC-125 Survival Radio) Cut a 20-inch length of Type I or IA nylon cord and sear ends. Route one end of the cord through the grommet located on the radio cap webbing of the AN/PRC-125 radio, tie end with an overhand knot and secure using a bowline knot. Route the other end through the right loop located inside the large right front pocket of flotation vest. Tie end with an overhand knot and secure using a bowline knot. Fake remaining cord and secure with rubber band. Stow radio in pocket, route voice box out the top right side of pocket and secure pocket flap. Attach voice box to velcro patch above pocket and route antenna through channel in flotation vest.

NOTE

AN/PRC-149 radio cables that extend from the radio to the Swimmer Control Unit may vary in size. New shorter cables are being introduced to avoid entanglement hazards. Both are acceptable.

8. (For AN/PRC-149 Survival Radio with C-12631/PRC-149 Swimmer's Radio Control Unit) Cut a 20-inch length of Type I or IA nylon cord and sear ends. Route one end of the cord through the hole located on the bottom on the AN/PRC-149 radio, tie end with an overhand knot and secure using a bowline knot. Route the other end through the right loop located inside the large right front pocket of flotation vest. Tie end with an overhand knot and secure using a bowline knot. Fake remaining cord and secure with rubber band. Stow radio in pocket, route voice box out the top right side of pocket and secure pocket flap. Attach voice box to velcro patch above pocket and route antenna through channel in flotation vest.

9. Record inspection date and data on appropriate forms in accordance with COMNAVAIRFORINST 4790.2.

14-423A. INSTALLATION AND INSPECTION OF EMERSON SAR KNIFE (TRISAR HARNESS ASSEMBLY ONLY). The Emerson SAR Knife is an authorized replacement for the current divers knife with scabbard and hook blade knife (figure 14-51A).

14442001

Figure 14-51A. N-SAR (BTS) SAR Knife (Opened)

14-423B. INSPECTION. The knife shall be inspected every 90 days to coincide with the TRISAR Harness Assembly. A complete disassembly and re-assembly shall be performed every 180 days.

14-423C. 90 DAY INSPECTION. Inspect as follows:

Materials Required

Quantity	Description	Reference Number
1	Knife Sharpening Tool Kit	P/N SS2 NIIN 01-430-1570 (or equivalent)
1	Serrated Blade Sharpening Hone for use with P/N SS2	P/N SS24 NIIN 01-430-1554 (or equivalent)

Note: These tools may be available through the command's tool room inventory.

1. Inspect for corrosion. Clean as necessary. Use VV-L-800 or similar product to lubricate knife. Wipe excess with clean dry cloth.

2. Inspect screws for security. If needed adjust the tension screw, (straight slot screwhead), to remove any side to side play in the blade when open.

NOTE

The Emerson website, www.emersonknives.com, has several methods for knife sharpening.

3. Sharpen blade as necessary.

14-423D. 180 DAY INSPECTION. The 180 day inspection consists of a complete disassembly and re-assembly of the knife. Perform 180 day inspection as follows:

Materials Required

Quantity	Description	Reference Number
As Required	General Purpose Grease	MIL-G-23549 NIIN 00-985-7316 or equivalent

NOTE

Lay out disassembled parts in order of removal for easier re-assembly.

1. Disassemble knife and wipe all components with a clean lint-free cloth.

2. Lubricate washers on both sides with a liberal amount of grease.

3. Re-assemble knife and operate to ensure proper assembly. With knife open check blade for side to side play and adjust as necessary.

4. Sharpen blade as necessary.

14-423E. INSTALLATION.

1. Un-snap webbing retainer from knife scabbard and remove diver's knife and scabbard. Re-snap webbing retainer. Retain knife and scabbard for future use.

2. Untie hook blade knife from lower left side pocket. Retain hook blade knife for future use.

3. Cut a 48 inch piece of Type I or Type IA nylon cord and sear ends. Tie an overhand knot at each end. Route one end of the cord through the hole in the knife handle and secure with a bowline knot. Secure the other end to the right loop located inside the lower left hand pocket of the flotation vest using a bowline knot. Secure knife to the side of pocket using the clip. Fake excess cord and secure with a rubber band.

Section 14-24.2. Aircrew Swimmer's Harness (HBU-23/P)

14-424. DESCRIPTION.

14-425. The HBU-23/P (figure 14-52) provides the Rescue Swimmer with maximum mobility and the means to perform rescue operations in the water. A release assembly provides convenient and speedy separation of the survivor and rescue swimmer once both are safely onboard the rescue helicopter. It also provides a means for immediate jettison from the hoist cable in event of an emergency. The HBU-23/P is used in conjunction with the LPU-28/P Life Preserver, refer to NAVAIR 13-1-6.1-2.

14-426. MODIFICATION.

14-427. Limited modification of the swimmer's harness is authorized when necessary to properly fit persons with long or short torso measurements. Refer to paragraphs 14-441 and 14-443 for modification requirements.

14-428. ORIGINAL ISSUE FITTING AND MARKING.

14-429. The concept of fitting as used in this chapter refers to procedures necessary to be followed for components requiring adjustment after rescue harness build-up instructions. Fitting instructions are provided only as a general guide. Because of the wide variation in torso shapes likely to be encountered it is not possible to present detailed guidance. A successful fit depends largely on the skill and experience of the Aircrew Survival Equipmentman in attaching the components to match the aircrewmember's torso contour.

NOTE

The rescue harness must fit the aircrewmember properly to provide maximum comfort and effectiveness during operation. When fitting the rescue harness, the aircrewmember shall be wearing the required SAR equipment.

Lengths of shoulder straps, chest strap and sizes of hook and pile tape are approximate and should be fitted to achieve the best possible fit. HBU-23/P harnesses already in service do not have to comply with the 1 inch fold in step 2 unless chest strap is long enough or is replaced in accordance with paragraph 14-443.

1. Have aircrewmember don harness and adjust shoulder straps to optimum position. Measure and mark free end of shoulder straps 5 ±1 inches (finished length of strap shall be at a length that is easy for the aircrewmember to grasp.) Sear cut ends, ensure there are no sharp edges. Mark location of free end to the riser strap. Fold each free end of shoulder strap under 1/2 inch and sew in place using 3 rows of stitches parallel and centered with the fold. Using a 1 3/4 inch x 1 inch size of hook and pile tape, locate hook tape 1/2 inch above folded edge of free end riser strap and locate pile tape 1 inch above position marked during fitting. Sew hook and pile tape in place using a 1 1/2 by 3/4 inch cross boxstitch.

THIS PAGE INTENTIONALLY LEFT BLANK.

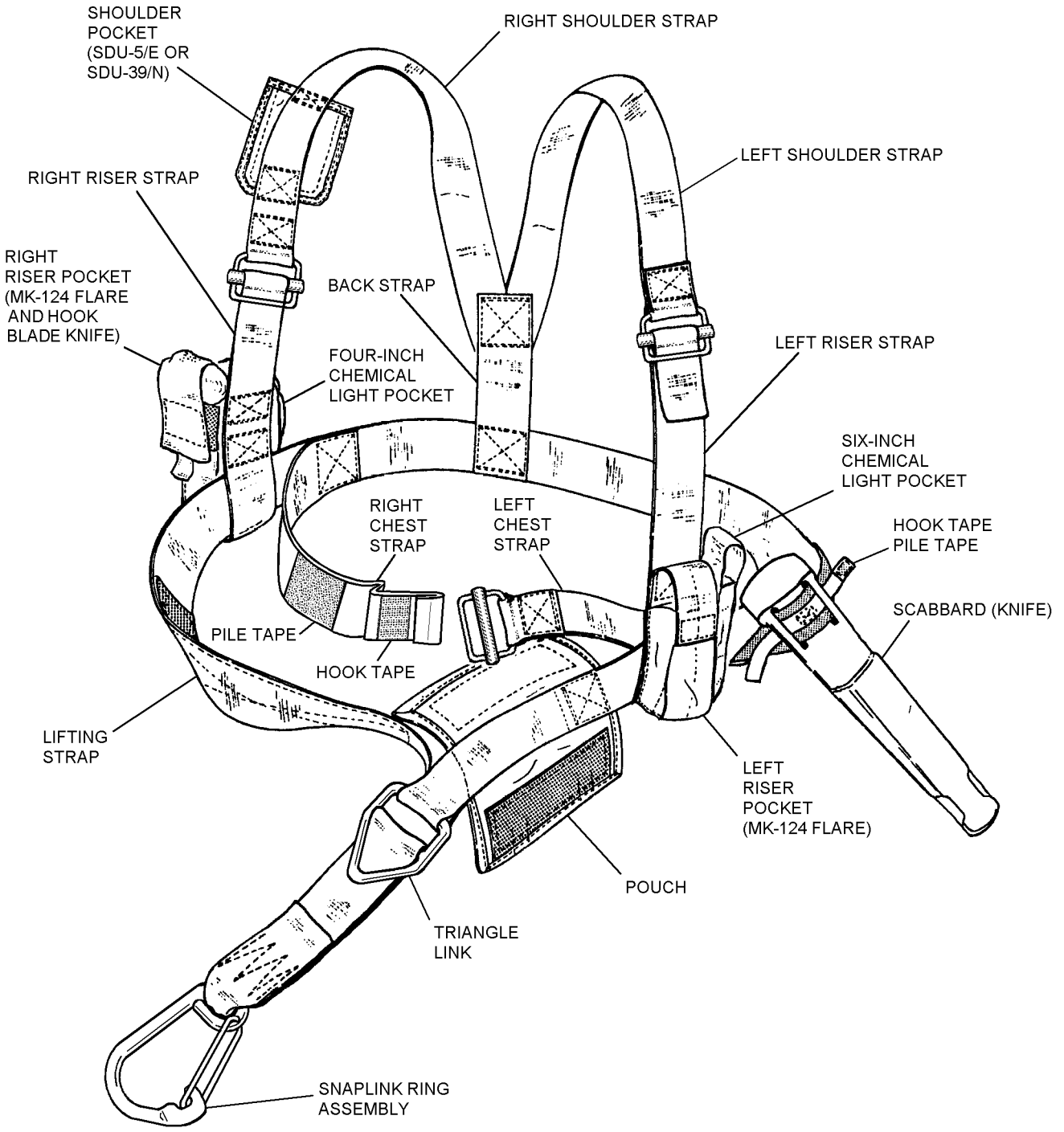

Figure 14-52. Aircrew Swimmer's Harness (HBU-23/P)

2. Adjust chest strap to optimum position, allowing ample room for chest expansion during heavy exertion. Cut off excess webbing from free end leaving approximately 6 ±1 inches from buckle. Sear cut end, ensure there are no sharp edges. Fold free end of chest strap under 1 inch and sew in place using 3 rows of stitches parallel and centered with the fold. Mark position of folded end to the right chest strap. Sew a 2 inch x 2 inch piece of hook tape to the free end of right chest strap. Butt hook tape up against seared end of webbing and stitch in place using a 1 3/4 by 1 3/4 inch cross boxstitch. Sew a 4 x 2 inch piece of pile tape to right chest strap. Center pile tape on postion marked during fitting and stitch in place using a 3 3/4 x 1 3/4 inch cross boxstitch.

NOTE

Location of a scabbard is determined by trial fit on each individual. Mark location when determined. For left-handed aircrewmembers, the knife scabbard may be attached to the right side of the rescue harness.

3. Insert knife scabbard attaching strap, fabricated in paragraph 14-442, through slots in scabbard. Position scabbard on lifting strap slanted to swimmer's left at a 60° angle (figure 14-53). Mark position of scabbard on lifting strap.

14-430. ATTACHMENT OF KNIFE SCABBARD. To attach knife scabbard, proceed as follows:

Materials Required

Quantity	Description	Reference Number
As Required	Thread, Nylon, Size E	V-T-295 NIIN 00-204-3884
1	Knife and Scabbard, Divers (See Note)	P/N 7208-00 (SKB) (CAGE 25609)

Notes: Only scabbard portion is required for this assembly. Retain knife for use during rigging and packing.

1. Locate knife scabbard attaching strap on lifting strap at position marked during fitting.

2. Stitch size E thread to attach strap to lifting strap using triangular box stitches. Push back edge of scabbard to stitch as close as possible to scabbard. Do not sew any closer than 1/8 inch from edge of material (figure 14-53).

3. Place each end of the hook and pile tape assembly through the knife scabbard slots.

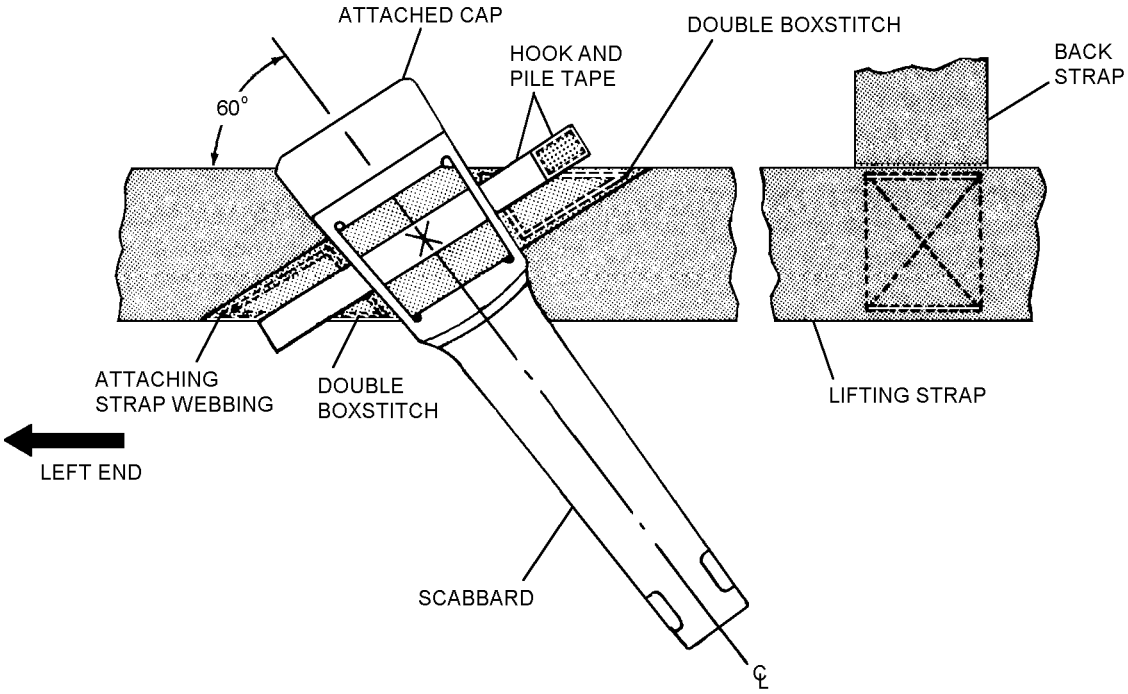

014053

Figure 14-53. Attachment of Scabbard to Lifting Strap

14-431. MAINTENANCE.

14-432. INSPECTION. The Aircrew Swimmer's Harness shall be subjected to Place-In-Service and Special Inspections. Refer to table 14-1 for all required inspection cycles.

NOTE

Refer to Chapter 9 and 12 of this manual for inspection of survival items.

14-433. Place-In-Service Inspection. The Place-In-Service Inspection shall consist of the following:

1. Visual Inspection (paragraph 14-435)

2. Service Life Check (paragraph 14-436)

3. Original Issue Fitting and Marking (paragraph 14-428)

4. Rigging and Packing (paragraph 14-444).

14-434. Special Inspection. The Special Inspection shall consist of the following:

1. Visual Inspection (paragraph 14-435)

2. Service Life Check (paragraph 14-436)

3. Contamination Inspection (paragraph 14-437)

4. Rigging and Packing (paragraph 14-444)

5. Repair in accordance with paragraph 14-438.

14-435. Visual Inspection. The Visual Inspection shall consist of the following:

1. Inspect harness webbing, front pouch, and pockets for cuts, tears, open seams, loose or broken stitching, and signs of contamination.

2. Snaplink assembly and all other hardware for distortion, corrosion, sharp edges, security of attachment, and ease of operation.

3. Hook and pile fasteners for condition, proper mating, and security of attachment.

4. Ensure presence and condition of survival items.

14-436. Service Life Check. The service life of the rescue harness is 7 years from the date it was placed in service. When a harness reaches the limit of its service life it shall be removed from service and scrapped.

1. When a rescue harness is first placed into service, the date shall be stenciled on the inside of the chest strap using a waterproof marking ink that is visible. The date shall be indicated by month and year; 5-90 would indicate the harness was placed in service May 1990.

2. If a harness does not have a start of service date indicated, service life shall expire 7 years from the date of manufacture. Date of manufacture is stamped on the inside of the chest strap.

14-437. Contamination Inspection. The rescue harness shall be inspected for acid and/or alkaline contamination as follows:

Materials Required

Quantity	Description	Reference Number
As Required	Distilled or Demineralized Water	—
As Required	Test Kit, Alkacid, Full-Range	A-988 NIIN 00-420-0507

CAUTION

Ensure the area of the harness in which test is to be conducted is clear of any source of contamination which could affect test results.

NOTE

A pH reading of 5.0 to 9.0 is in the safe zone. Readings below 5.0 indicate excess acidity and readings above 9.0 indicate excess alkalinity.

1. Dampen suspected area with fresh distilled or demineralized water.

NOTE

Handle test paper by the edges of one end only, to avoid contamination and false readings.

2. Place piece of full-range test paper (0.0 to 14.0 pH) on dampened area. A color change will indicate the approximate pH reading and which specific short-range paper to use.

3. Place short-range test paper indicated in step 2 on the dampened area. Color change indicates the pH factor of affected area. By matching test strip with applicable range color chart supplied with kit, acid or alkaline strength can be determined.

4. If acid contamination is found, the harness assembly shall be considered nonrepairable and scrapped.

5. If alkaline contamination is found, the harness shall be rinsed in cool fresh water and retested until a safe reading is obtained. All fabric and webbing shall then be carefully inspected for any sign of deterioration.

14-438. REPAIR. Repair of the Rescue Aircrew Swimmer's Harness shall be limited to restitching broken or loose stitching and the replacement of the right chest strap. Repair stitches shall be sewn along the original stitch line to 3/4 inch on either side of the broken stitch area using size 6 nylon thread, four to six stitches per inch. Damage of three or fewer broken or loose stitches need not be resewn, but shall be monitored.

NOTE

Harnesses with acid contamination, fabric deterioration, cuts and fraying of harness webbing, and damaged hardware are considered nonrepairable and shall be scrapped.

14-439. CLEANING. The rescue swimmer shall be responsible for cleaning the rescue harness. The harness shall be cleaned as often as necessary to remove perspiration stains, dirt, and other stains which may degrade performance of the assembly. Clean harness assembly as follows:

CAUTION

Do not scrub rescue harness.

1. Soak assembly in cool, fresh water for two or three hours to loosen any set stains or dirt.

2. Drain (do not wring) and immerse in a tub of fresh water, not over 120°F. Gently agitate by hand.

3. After 5 to 10 minutes, drain assembly and clean the tub.

4. Repeat steps 2 and 3 twice.

5. Petroleum and other stubborn stains may be removed by repeated applications of mild soap and water solution. Each application shall be followed by rinse in cool fresh water.

6. Hang rescue harness on a wooden or plastic hanger until dry.

14-440. FABRICATION.

14-441. Fabrication of Modified Back Strap. Fabrication of modified back strap to extend or decrease torso length of rescue aircrew swimmer's torso harness shall be accomplished at intermediate maintenance. Refer to figure 14-52 and proceed as follows:

Materials Required

Quantity	Description	Reference Number
As Required	Webbing, Nylon, Type 13, 1 23/32-Inch	MIL-W-4088, NIIN 00-260-4585
As Required	Thread, Nylon, Size 6	V-T-295, NIIN 00-559-5211

1. Carefully remove existing back strap by cutting stitches binding back strap to the chest strap and vee of shoulder straps (figure 14-53).

NOTE

Ensure stitching which binds shoulder straps in vee position is not damaged when removing back strap. Restitch as necessary.

2. Measure and sear cut required length of MIL-W-4088 webbing and boxstitch to harness assembly using size 6 thread in same positions as strap removed.

3. If necessary for shorter torso length, the back strap may be removed and the vee of the shoulder strap assembly sewn directly to the chest strap using boxstitch and size 6 thread.

14-442. Fabrication of Knife Scabbard Attaching Strap. To fabricate the knife scabbard attaching strap, proceed as follows:

Materials Required

Quantity	Description	Reference Number
As Required	Webbing, Nylon, 1 23/32-Inches Wide	MIL-W-4088, NIIN 00-530-1489
As Required	Thread, Nylon, Size 6	V-T-295, NIIN 00-559-5211
4 1/2 Inches	Fastener Tape, Pile, Class 1, 5/8-Inch Width, Black Olive Green	MIL-F-21840 NIIN 00-935-6763 NIIN 01-010-7204

Materials Required (Cont)

Quantity	Description	Reference Number
3/4 Inch	Fastener Tape, Hook, Type II, Class 1, 5/8-Inch Width, Black Olive Green	MIL-F-21840 NIIN 00-935-6762 NIIN 01-010-7203
As Required	Thread, Nylon, Size E	V-T-295 NIIN 00-204-3884

1. Cut a 5 1/2-inch length of webbing and trim ends at 30° angles. Sear ends.

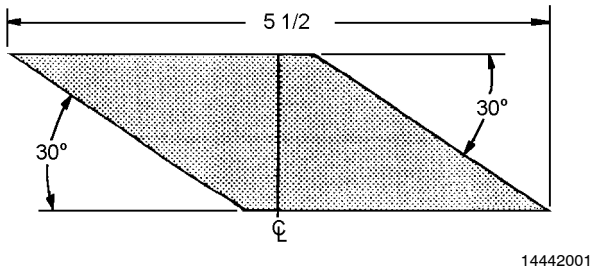

Step 1 - Para 14-442

2. Cut a 4 1/2-inch length of pile tape and a 3/4-inch length of hook tape. Attach hook tape to one end of pile tape, with back of hook tape facing back of pile tape, by stitching around the edges of the hook pile. Tack pile tape to knife scabbard attachment strap at pile tape center with size E thread, double two turns, tie off with a surgeons knot followed by a square knot.

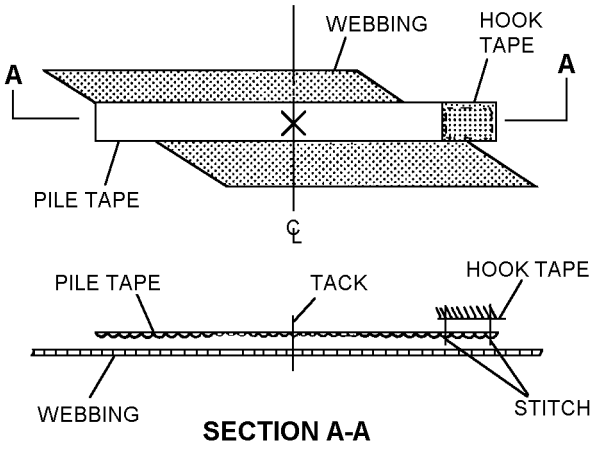

Step 2 - Para 14-442

14-443. Fabrication and Replacement of Right Chest Strap. To replace the right chest strap, proceed as follows:

WARNING

Replacement of the right chest strap is limited to one time replacement due to the degradation of webbing by removal and replacement of stitching. Replacement of the right chest strap will increase length to allow for aircrewmember growth or for changes in wetsuit ensemble configuration.

Materials Required

Quantity	Description	Reference Number
30 Inches	Webbing, Nylon, Type XIII, O.D. 1 23/32-Inch	MIL-W-4088 NIIN 00-260-4585
As Required	Thread, Nylon, Size 3, O.D.	V-T-295 NIIN 00-559-5212
4 Inches	Fastener Tape, Pile, 2-Inch	MIL-F-21840 NIIN 00-926-4930
2 Inches	Fastener Tape, Hook 2-Inch Wide, Black, Olive Drab, Sage Green	MIL-F-21840 NIIN 00-916-8399 NIIN 00-926-4931 NIIN 00-405-2267 NIIN 00-151-6479
As Required	Thread, Nylon, Size E	V-T-295 NIIN 00-204-3884

1. Locate the right chest strap on the harness. Using a suitable marker, draw a single line on the lifting strap where the chest strap is sewn to the lifting strap, to use as a landmark for the replacement chest strap.

2. Remove right chest strap by carefully cutting stitches securing the chest strap to lifting strap.

3. Measure and sear cut a 30-inch length of webbing. Locate the landmark line drawn on the lifting strap in step 1.

4. Place one end of the 30-inch length of webbing on the landmark and sew the chest strap to the lifting strap with a 1 1/4-inch cross boxstitch, using size 3 nylon thread with 6 to 8 stitches per inch.

5. Have the aircrewmember don required SAR equipment and the SAR Rescue Swimmer's Harness. Reeve right chest strap through left chest strap adjuster. Adjust chest strap to optimum position, allowing ample room for chest expansion during heavy exertion. Cut off excessive webbing from free end leaving approximately 6 inches of length below adjuster. Sear cut free end of chest strap. (Ensure that no sharp edges exist after sear cutting webbing.)

6. Have aircrewmember doff swimmer's harness. Lay out harness so that right chest strap is laying flat (against the lifting strap). Mark a line 2 inches from the seared end of the chest strap.

7. Fold the seared end of webbing to the line made in step 6 and sew 3 rows of stitches parallel and centered with the fold, using size E nylon thread, 7 to 10 stitches per inch. There should now be a 1 inch fold with approximately 1/2 inch of loose webbing to prevent the chest strap from passing through the adjuster without assistance.

8. Cut a 2 inch by 2 inch length of hook tape and sew the hook tape to the bitter end of the webbing at the fold made in step 7 using size E nylon thread, 7 to 10 stitches per inch. Stitch hook tape in place using a 1 3/4 by 1 3/4 inch cross boxstitch.

9. Turn the right chest strap over, sew a 4 inch length of pile tape centered on the webbing free end, starting at the fold, using size E nylon thread, 7 to 10 stitches per inch. Stitch pile tape in place using a 3 3/4 by 1 3/4 inch cross boxstitch.

10. Have aircrewmember don swimmer's harness and check fit.

11. Document in accordance with COMNAVAIRFORINST 4790.2.

14-444. RIGGING AND PACKING.

14-445. To rig and pack survival items onto the rescue harness, proceed as follows:

Materials Required

Quantity	Description	Reference Number
As Required	Cord, Nylon, Type I (with core removed) or Type IA (coreless)	MIL-C-5040 NIIN 00-240-2154 NIIN 00-292-9920
1	Light, Marker Distress SDU-39/N (Note 1)	FRS/MS-2000M NIIN 01-411-8535
2	Signal, Smoke and Illumination, MK-124 MOD 0	DL3139734 NIIN 01-030-8330
1	Knife, Hook Blade	823AS101-1 NIIN 01-088-4654
1	Knife, Divers, With Scabbard (Note 2)	358 NIIN 01-278-3007
2	Chemical Lights, 4-Inch	9-74780 NIIN 00-106-7478

Materials Required (Cont)

Quantity	Description	Reference Number
2	Chemical Lights, 6-Inch	95270-52 NIIN 01-074-4230

Notes: 1. SDU-5/E is no longer available but can remain in service until it fails inspection. Use flashguard when using SDU-5/E.
2. Attach scabbard in accordance with paragraph 14-430.

1. Cut an 80-inch length of Type I or IA nylon cord and sear ends. Tie an overhand knot in each end. Wrap end of cord two turns around one end of MK-124 MOD 0 signal flare and tie with surgeon's knot. Turns of cord shall overlap with all knots positioned snugly against each other. Route cord to opposite end of signal flare and tie in same manner as above. Cord between ties shall be drawn tight. Secure free end of cord to the loop on flare pocket with a bowline knot. Fake remaining cord along side of flare and secure with rubber band. Repeat procedures for second flare.

2. Cut a 30-inch length of Type I or IA nylon cord and sear ends. Tie an overhand knot in each end. Pass one end through the grommet on the handle of knife and tie a bowline knot. Secure the free end of cord to the loop on knife pocket with a bowline knot. Fake the remaining cord along the length of the knife handle and secure with a rubber band.

3. Cut a 30-inch length of Type I or IA nylon cord and sear ends. Tie an overhand knot in each end. Tie one end to either plastic retainer on the SDU-5/E with a bowline knot. Tie the free end to the loop on light pocket with a bowline knot. Fake the remaining cord along the length of the light and secure with a rubber band.

4. Cut a 30-inch length of Type I or IA nylon cord and sear ends. Pass one end of cord through holes located at bottom of light switch channel on the SDU-39/N. Tie an overhand knot to free end, then tie the free end to the loop on the light pocket with a bowline knot. Fake the remaining cord and secure with a rubber band. Stow faked cord in light pocket.

5. Install diver's knife in scabbard and secure with hook and pile retainer strap.

6. Install 4-inch chemlights in right side pocket and 6-inch chemlights in left side pocket. Secure velcro flap.

NOTE

Ensure chemlight packaging is not torn or punctured during installation.

7. Ensure all survival items have been inspected properly. (CDI) Document inspections in accordance with COMNAVAIRFORINST 4790.2.

Section 14-24.3. LPU-28/P Life Preserver Assembly

14-446. GENERAL.

14-447. Refer to NAVAIR 13-1-6.1-2 for inspection of LPU-28/P Life Preserver Assembly (figure 14-54).

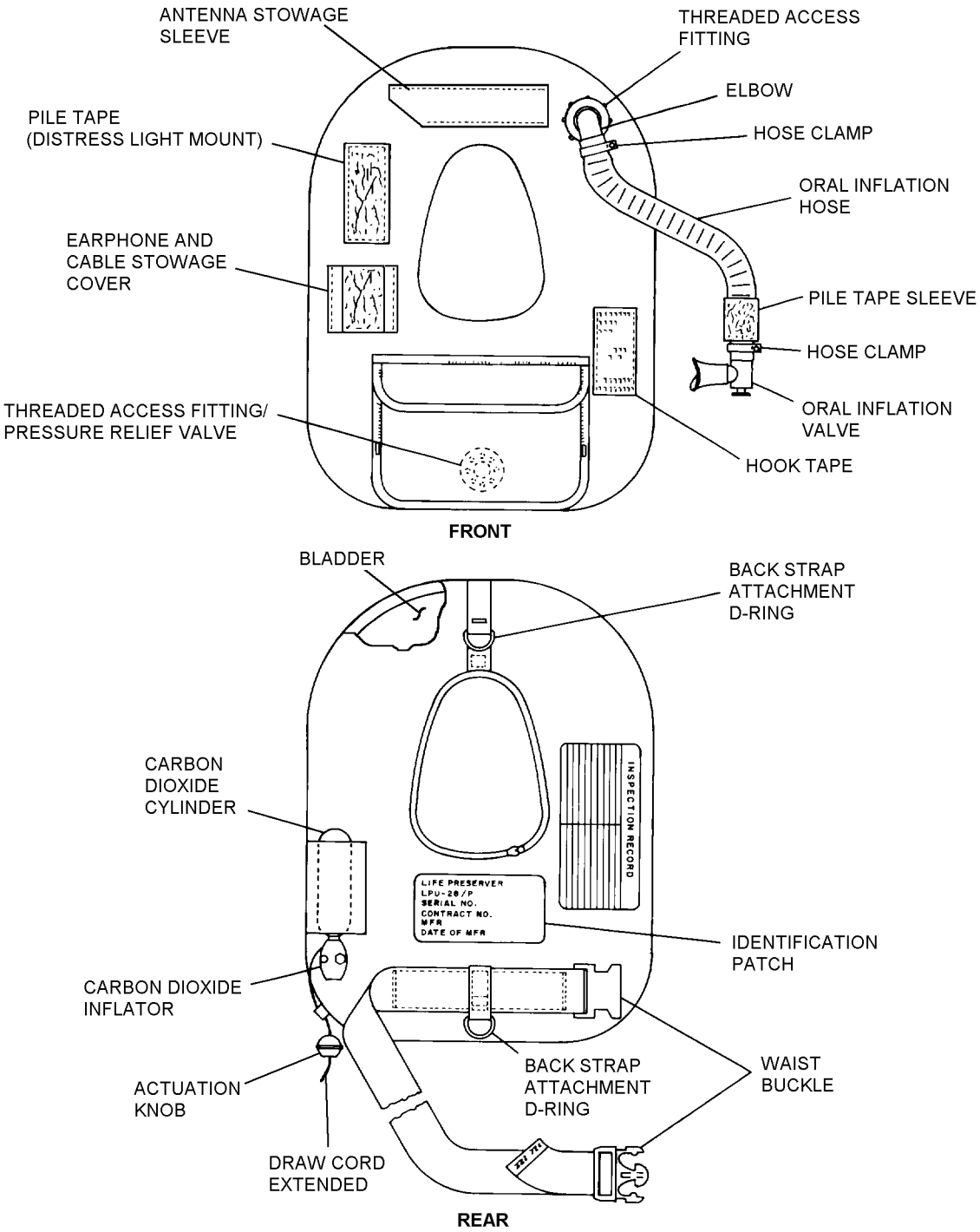

Figure 14-54. LPU-28/P Life Preserver Assembly, Parts Nomenclature

Section 14-24.4. Helicopter Aircrew Breathing Device (HABD) SRU-40/P Series

14-448. GENERAL.

14-449. Refer to Chapter 16 of this manual for inspection of the Helicopter Aircrew Breathing Device (HABD) SRU-40/P Series (figure 14-55).

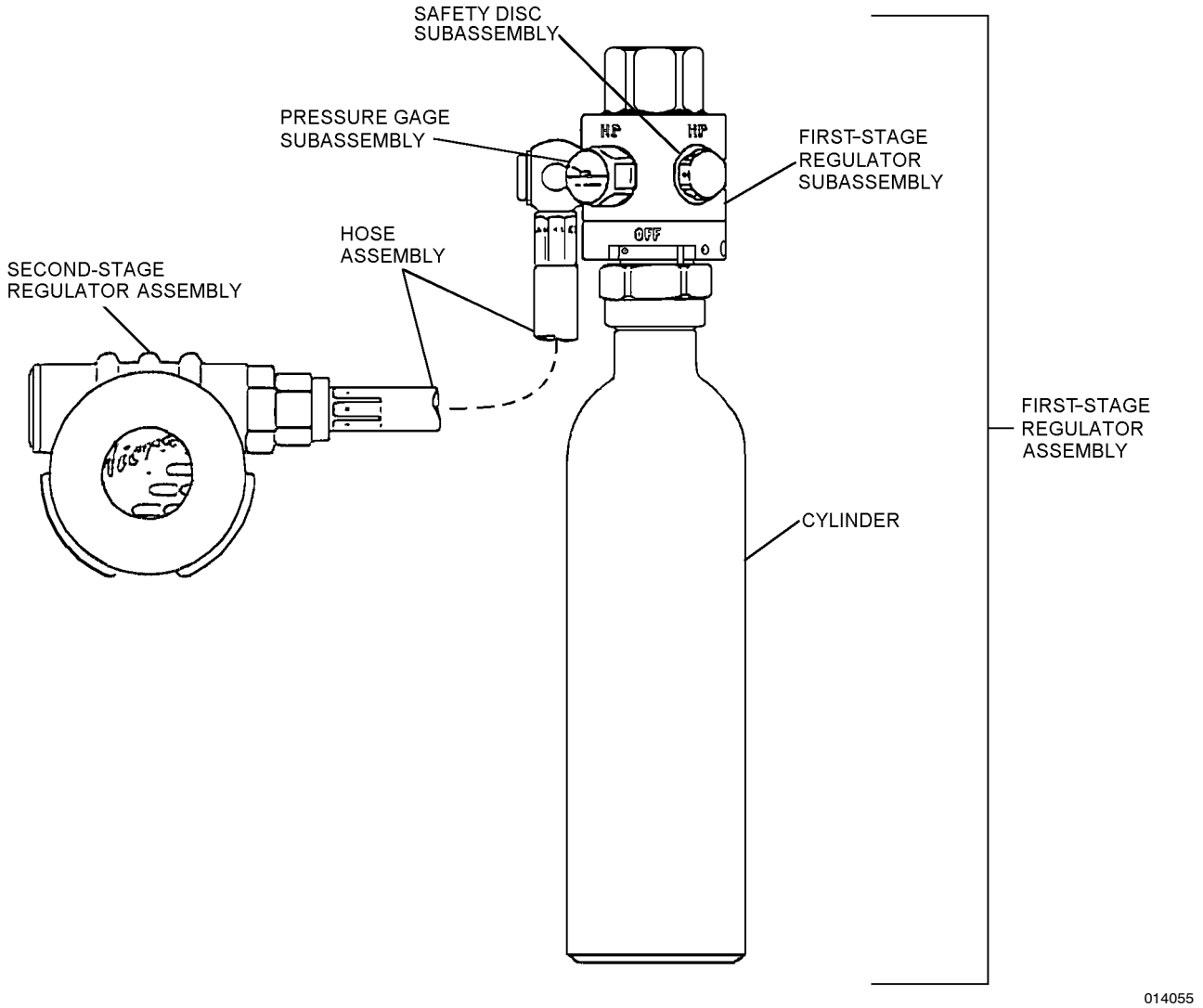

Figure 14-55. HABD Major Components

Section 14-24.5. SAR Helicopter Aircrew Breathing Device Holster

14-450. DESCRIPTION.

NOTE

The SAR Helicopter Aircrew Breathing Device Holster is only authorized for use on the TRI-SAR harness assembly and LPU-28 life preserver.

14-451. The holster (figure 14-56) houses the HABD and is interchangeable between the TRI-SAR harness and the LPU-28. It is authorized for use by SAR swimmers on over-water search and rescue operations.

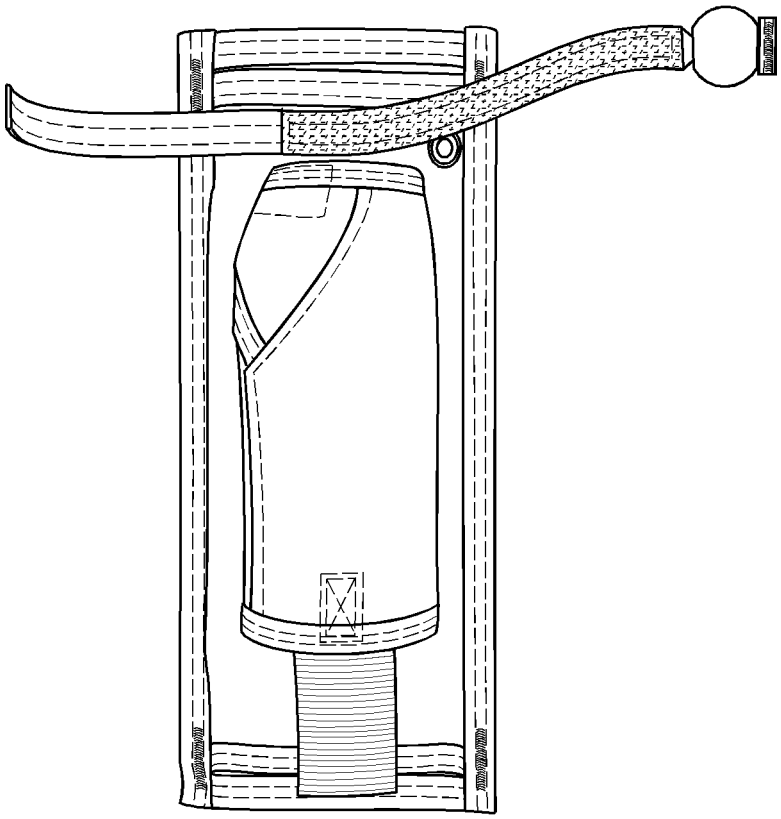

014056

Figure 14-56. SAR Helicopter Aircrew Breathing Device Holster

14-452. MODIFICATION.

14-453. There are no modifications to the holster that are required or authorized.

14-454. INSTALLATION.

14-455. INSTALLATION OF HABD INTO HOLSTER.

Materials Required

Quantity	Description	Reference Number
1	SRU-40A/P or SRU-40B/P	(Note 1)
1	Mouthpiece Cover	006-53 (Note 2)
1	HABD holster	1006-59 (Note 2)
1	Strap, Tie-down, 10 inch or larger Black or Neutral	MIL-S-23190 NIIN 01-034-5871 NIIN 00-570-9598

Materials Required (Cont)

Quantity	Description	Reference Number

Notes: 1. Use current HABD issued.
2. These items must be opened purchased from the following source:
US Divers, Inc
2340 Cousteau Court
Vista, CA 92083

POC: Government Sales
Comm: 800-252-3483
FAX: 760-597-4914
sryan@aqualung.com

1. Ensure HABD has been inspected in accordance with Chapter 16 of this manual.

2. Open velcro flap on cylinder sleeve. Place the HABD cylinder in the sleeve of holster and secure velcro flaps around cylinder and cylinder neck. Slide hose into the pocket behind the cylinder sleeve ensuring second stage is positioned to the right of the cylinder on grommet side. Rotate second stage so mouthpiece is facing outward away from holster and purge cover is facing the wearer.

NOTE

Do not over tighten. Over tightening of tie-down strap will put strain on the mouthpiece cover which can cause the mouthpiece cover to slip off of mouthpiece.

3. Slide mouthpiece cover onto mouthpiece. Using a tie-down strap, route strap through grommet on holster and mouthpiece cover opening and secure tie-down strap. Cut off excess strap.

NOTE

SAR model manager will ensure that SAR crewmembers are trained on the proper installation of the HABD holster.

14-456. TRI-SAR HARNESS ATTACHMENT. To attach the holster with HABD to the TRI-SAR harness, proceed as follows:

1. Don TRI-SAR harness and adjust for proper fit.

NOTE

A correctly sized and fitted TRI-SAR harness is essential for the proper positioning of the SAR HABD holster.

2. Disconnect chest strap buckle. Hold holster with HABD installed in a vertical position and slide the chest strap through the single vertical webbing strap on the back of holster.

3. Reconnect chest strap buckle. Position holster in the center of the chest area.

14-457. LPU-28 LIFE PRESERVER ATTACHMENT. To attach the holster with HABD to the LPU-28 life preserver, proceed as follows:

WARNING

Placing the holster with the HABD on the left side of the LPU-28/P waistbelt may interfere with beaded inflation handle and cause accidental inflation of the LPU-28/P when deploying the HABD from the holster.

1. Don LPU-28 and adjust waist belt for proper fit.

NOTE

A properly fitted LPU-28 is essential for proper positioning of the SAR HABD holster. The wearer of the LPU-28/P with holster may choose which side to wear the holster. Ensure the top of the HABD is facing forward for easy access.

2. Disconnect the waist belt buckle. Position holster for either right side or left side attachment. Slide waistbelt through the three webbing straps located on the back of the holster.

3. Reconnect waist belt buckle.

14-458. MAINTENANCE.

14-459. INSPECTION. The HABD Holster shall be subjected to a Place-In-Service Inspection and a Special Inspection. Refer to table 14-1 for required inspection cycles.

14-460. Place-In-Service Inspection. The Place-In-Service Inspection shall be performed in accordance with paragraph 14-461, steps 1 thru 5.

14-461. Special Inspection. To perform the Special Inspection of the HABD Holster, proceed as follows:

1. Inspect holster for wear, rips, tears, fraying and broken stitches.

2. Check grommet for corrosion and security of attachment.

3. Inspect for contamination.

4. Install HABD into pocket in accordance with paragraph 14-455.

5. Attach HABD to TRI-SAR harness or LPU-28/P in accordance with paragraphs 14-456 and 14-457.

6. Repair in accordance with paragraph 14-462.

14-462. REPAIR. Repairs are limited to minor stitching, replacement of grommet and cleaning.

1. Stitching repairs are limited only to those areas of the holster that are accessible by a sewing machine.

2. Re-enforce material for new grommet as necessary.

14-463. CLEANING. To clean HABD Holster, proceed as follows:

Materials Required

Quantity	Description	Reference Number
As Required	Detergent, General Purpose	MIL-D-16791
As Required	Cloth, Lint-Free	MIL-C-85043

1. Rinse holster with clean water.

2. Using a cloth and a mixture of clean water and detergent, scrub or wipe contaminated area until area is clean.

3. Rinse holster a second time with fresh water to remove soap and contaminants.

4. Hang to dry.

THIS PAGE INTENTIONALLY LEFT BLANK.

Section 14-24.6. SAR Swimmer's Wetsuit

14-464. DESCRIPTION.

14-465. The SAR Swimmer's Wetsuit (figure 14-57) is an exposure protective assembly designed for continuous wear. It consists of a one-piece trouser, one-piece shorty, jacket, hood and boots.

14-466. MODIFICATION.

14-467. There are no modifications to the Wetsuit that are required or authorized.

14-468. SIZING.

14-469. Use tables 14-12 and 14-13 as a guide to ordering the correct size wetsuit.

NOTE

Sizes that do not cross to an NSN in table 14-1 may be ordered directly from the vendor.

14-470. CUSTOM FIT PROCEDURES. Procedures for ordering custom fit wetsuit apparel are as follows:

1. Custom wetsuits can be ordered via the AMRON International website, www.amronintl.com by fax 760.746.1508 or email: sales@amronintl.com

2. Refer to the custom measuring chart in figure 14-58. A custom measuring chart is also available on the website.

3. Measure individual and submit to AMRON via fax or email.

14-471. MAINTENANCE.

14-472. INSPECTION. The Wetsuit shall be subjected to a Place-In-Service Inspection and a Special Inspection. Refer to table 14-1 for required inspection cycles.

14-473. Place-In-Service Inspection. The Place-In-Service Inspection shall be performed in accordance with paragraph 14-474, steps 1 thru 5.

14-474. Special Inspection. To perform the Special Inspection of the Wetsuit, proceed as follows:

1. Inspect for cuts, tears, abrasions, deterioration and contamination.

2. Inspect slide fasteners for corrosion and proper operation.

3. Inspect seams for separation.

4. Inspect slide fasteners for ease of operation.

5. Lubricate slide fastener with a light coat of silicone compound.

NOTE

Avoid getting silicone lubricant on wetsuit material. Wipe any excess off with clean cloth.

6. Repair in accordance with paragraph 14-475.

14-475. REPAIR. Repairs are limited to the repairing of minor holes, tears and cleaning. Repairs shall be accomplished as follows:

NOTE

Torn or ripped seams, broken zippers and contaminants containing acids shall render the wetsuit non-RFI and it shall be replaced.

Materials Required

Quantity	Description	Reference Number
1	Wetsuit Repair Kit Note 1	

Notes: 1. Refer to table 14-1 for repair kit ordering.

1. All repairs must be performed on clean dry material.

2. For small cuts, apply 2-3 coats of wetsuit glue (cement) to the surface on either side of the cut. Do not allow the sides to touch each other.

3. Allow each coat to dry approximately 10-15 minutes (until no longer tacky or wet).

4. When no longer tacky, align wetsuit material and pinch both sides of the material firmly together.

5. Adhesion is fully cured in approximately 30 minutes or longer depending on temperature and humidity.

6. For holes and large rips, which require new wetsuit material, cut a properly sized piece of wetsuit material from the material provided in the repair kit and use the same gluing technique as described above.

14-476. CLEANING. Cleaning shall be the responsibility of the SAR crewmember.

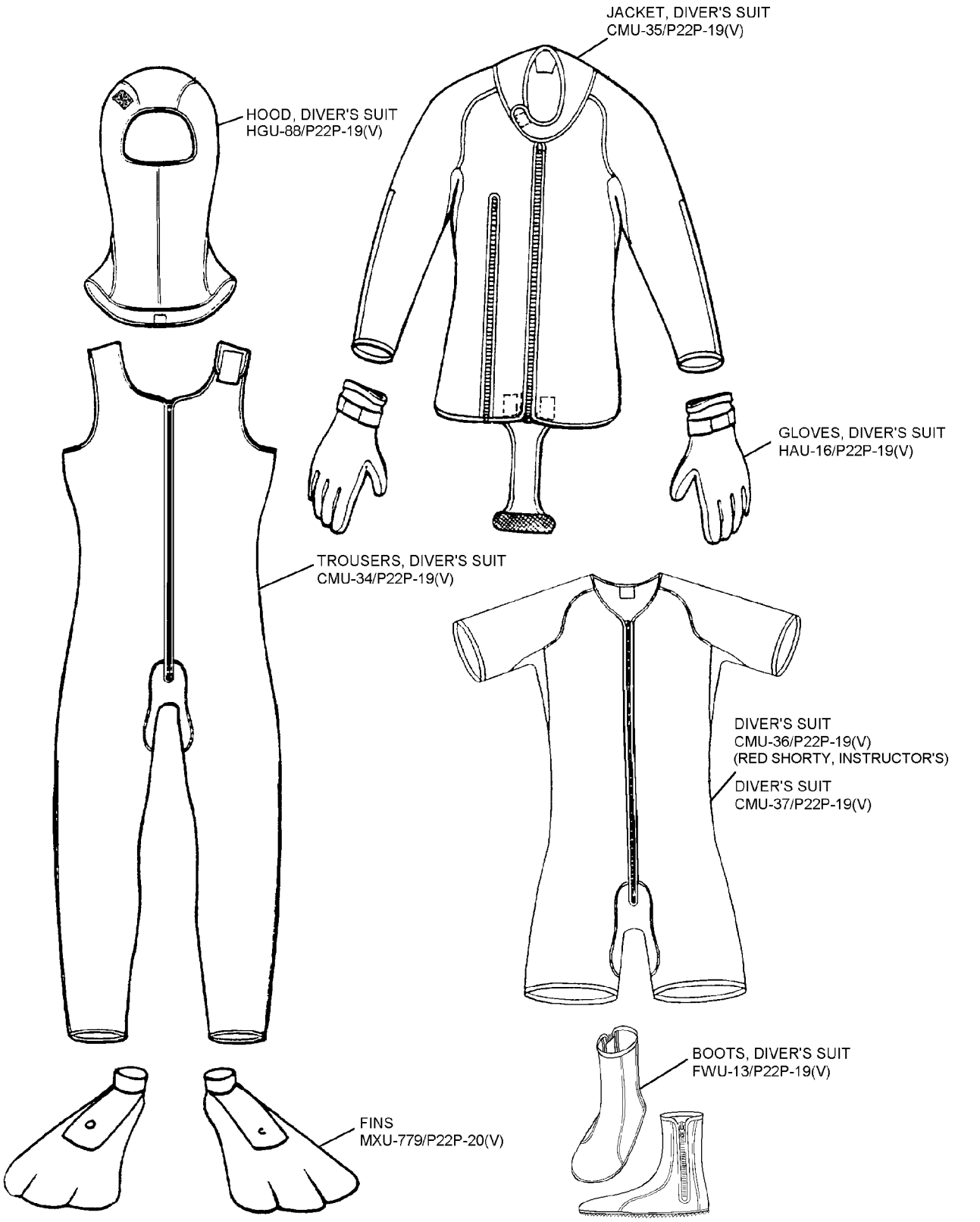

Figure 14-57. Wet Suit, Rescue Swimmer, A/P22P-19(V)

Table 14-12. Men's Standard Size Chart for SAR Suits

Size	Height	Weight (lbs)	Chest Circumference	Waist Circumference	Leg Inseam	Arm Length
Small	5′5″ to 5′8″	126-140	34-36	29-31	27	18
Small Long (Note 1)	5′8″ to 5′10″	136-145	34-36	29-31	29	20
Medium Short (Note 1)	5′7″ to 5′9″	136-160	34-36	31-33	26	17
Medium	5′9″ to 5′11″	145-160	36-38	31-33	28	19
Medium Long (Note 1)	5′11″ to 6′1″	155-165	37-39	31-33	30	21
Medium Large	5′9″ to 6′0″	160-170	39-41	33-34	28	19
Large Short (Note 1)	5′7″ to 5′9″	165-175	39-41	34-35	27	17
Large	5′10″ to 6′0″	170-180	39-41	34-35	29	19
Large Long (Note 1)	6′0″ to 6′2″	175-190	41-44	34-35	31	21
X-Large Short (Note 1)	5′7″ to 5′9″	175-195	41-44	36-38	27	17
X-Large	5′10″ to 6′0″	195-205	41-44	36-38	29	19
X-Large Long (Note 1)	6′1″ to 6′3″	190-210	41-44	36-38	31	21
XX-Large Short (Note 1)	5′8″ to 5′10″	210-225	44-47	38-40	27 1/2	17 1/2
XX-Large	5′11″ to 6′1″	210-225	44-47	38-40	29 1/2	19
XX-Large Long (Note 1)	6′1″ to 6′3″	215-230	44-47	38-40	31 1/2	21 1/2

Notes: 1. These sizes can be ordered directly from Amron. All other sizes have NSNs assigned. Refer to table 14-1 for list of NSNs.
2. For custom fit sizing, refer to paragraph 14-470 and custom fit chart (figure 14-58).

Table 14-13. Women's Standard Size Chart for SAR Suits

Size	Dress Size	Height	Weight	Bust & Cup Size	Waist	Hips	Leg Inseam	Arm Length
Small	5-7	5′2″ to 5′5″	105-120	32-34 A/B	24-25	33-35	26	17
Medium Short (Note 1)	7-9	5′0″ to 5′3″	115-130	34-36 A/B	25-26	35-37	25	16 1/2
Medium	7-9	5′3″ to 5′6″	115-130	34-36 A/B	25-26	35-37	27	18
Medium Long (Note 1)	7-9	5′7″ to 5′9″	125-135	34-36 B	25-26	35-37	29	20
Medium Large	9-11	5′4″ to 5′7″	125-135	34-36 B	26-27	36-38	27	18
Large Short (Note 1)	11-13	5′3″ to 5′5″	130-140	34-36 C	27-29	37-39	26	17
Large	11-13	5′5″ to 5′8″	135-145	34-36 C	27-29	37-39	28	18 1/2
Large Long (Note 1)	11-13	5′8″ to 5′10″	140-150	34-36 C	27-29	37-39	30	20 1/2
X-Large Short (Note 1)	13-15	5′4″ to 5′7″	140-155	38-40 C	29-31	38-40	26 1/2	17 1/2
X-Large	13-15	5′7″ to 5′9″	145-160	36-38 C/D	29-31	38-40	28 1/2	19
X-Large Long (Note 1)	13-15	5′9″ to 5′11″	155-170	36-38 C/D	30-32	38-40	30 1/2	21
XX-Large	15-17	5′7″ to 5′9″	155-175	40-42 D	32-35	41-44	28 1/2	19
XXX-Large (Note 1)	17-20	5′7″ to 5′9″	175-195	42-44 D	35-38	44-47	28 1/2	19

Notes: 1. These sizes can be ordered directly from Amron. All other sizes have NSNs assigned. Refer to table 14-1 for list of NSNs.
2. For custom fit sizing, refer to paragraph 14-470 and custom fit chart (figure 14-58).

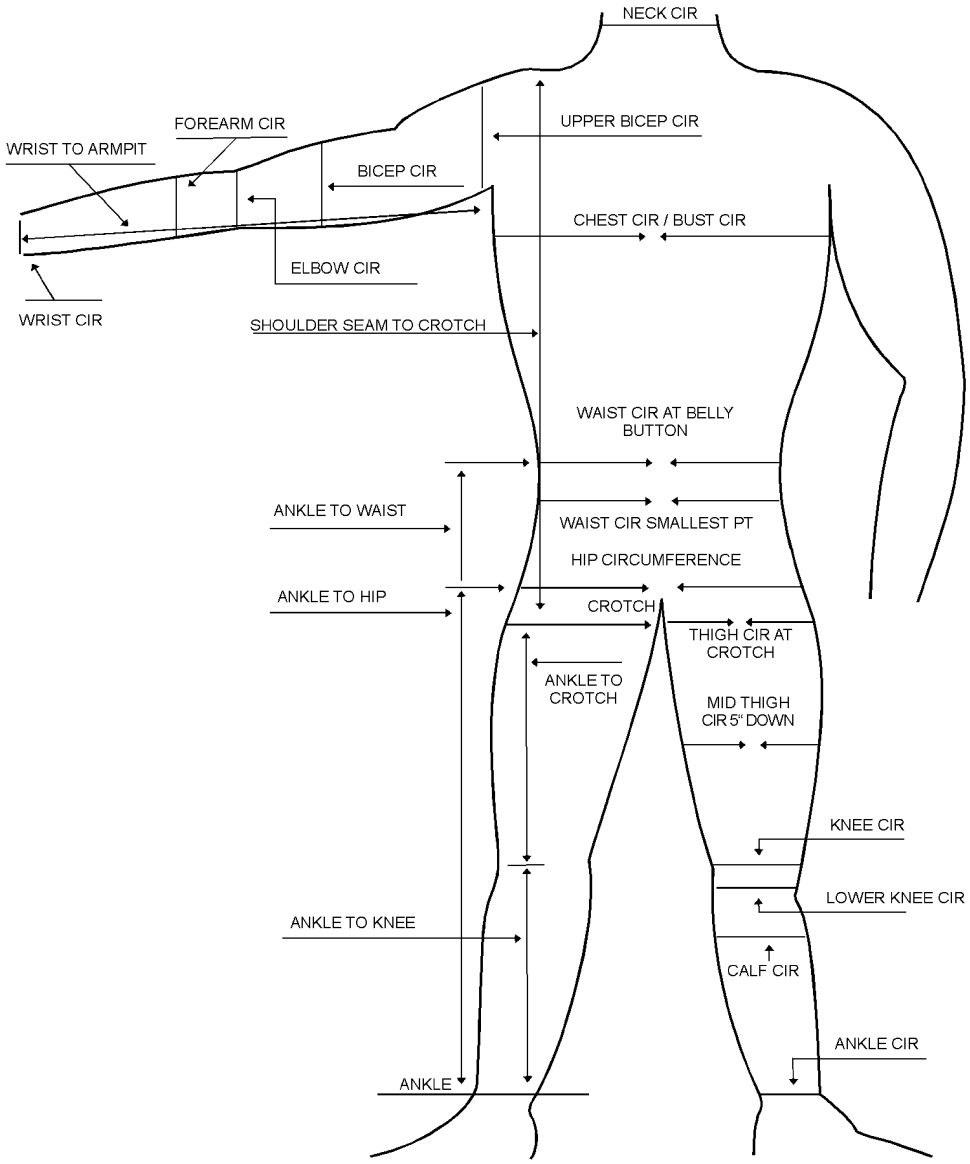

DoDAAC # (UIC)	Command or Company	First Name	Last Name
In Case we need to reach you, please complete the following	Phone	Fax No.	E-Mail

01405801

Figure 14-58. Custom Fit Measuring Chart (Sheet 1 of 2)

Complete the Measurements below and Fax or E-mail to Amron			
Weight		Biceps (4" above Elbow)	
Height		Upper Biceps (nearest shoulder)	
Ankle (1" above knee)		Wrist to Elbow (1" above wrist bone to smallest point of elbow	
Calf (largest point)		Wrist to Armpit (1" above wrist to center of armpit)	
Knee (2" below knee)		Center of Back to Wrist (center back of neck to 1" above wrist)	
Knee (at center)		Shoulder Tip to Tip (across back)	
Thigh (5" from crotch)		Ankle to Knee (1" above inside ankle bone to front center of knee)	
Thigh (at crotch)		Knee to Crotch (front center of knee to crotch)	
Hips (largest point)		Ankle to Crotch (1" above inside of ankle bone to crotch)	
Waist (smallest point)		Ankle to Hip (1" above inside of ankle bone to hip median at largest point)	
Waist (at navel)		Ankle to Waist (1" above inside of ankle bone to navel median)	
Chest or Bust (largest point)		Shoulder Seam to Waist (center of shoulder to navel median)	
Neck (at center)		Shoulder Seam to Crotch (center of shoulder to crotch median)	
Wrist (1" above bone)		Shoulder Seam to Ankle (center of shoulder to 1" above ankle bone)	
Forearm (largest point)		Head Circumference (at forehead)	
Elbow (smallest point)		Eyebrow to Base of Neck (over top of head)	

Women's Chest Measurements
Chest above Bust
Chest below Bust
Shoulder to Center of Bust
Center to Center of Bust
Cup Size
Bra Size

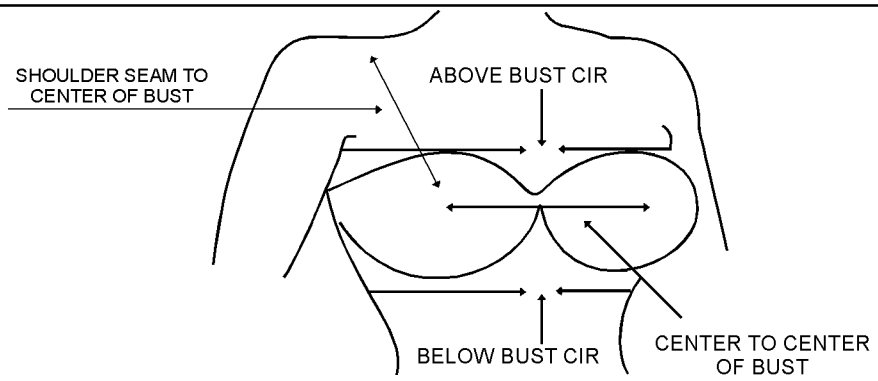

01405802

Figure 14-58. Custom Fit Measuring Chart (Sheet 2)

Section 14-24.7. SAR Swimmer's Mask

14-477. DESCRIPTION.

14-478. There are three styles of SAR Swimmer's Mask (figure 14-59). The Wraparound has tempered glass and chemlight attaching bar. The Wraparound II is the same style as the Wraparound and has tempered glass, attachment for chemlight bar and has a black silicone face skirt for a wide range of faces. The wraparound II also has metal adjustment buckles and all metal parts are black in color. The Sherwood Magnum 4 is black in color, has tempered glass and chemlight attachment bracket. The Sherwood Magnum 4 is commonly used for small, hard to fit individuals that do not fit into the Wraparound mask styles.

14-479. MODIFICATION.

14-480. There are no modifications to the mask that are required or authorized.

14-481. MAINTENANCE.

14-482. INSPECTION. The SAR Swimmer's Mask shall be subjected to a Place-In-Service Inspection and a Special Inspection. Refer to table 14-1 for required inspection cycles.

14-483. Place-In-Service Inspection. The Place-In-Service Inspection shall be performed in accordance with paragraph 14-484, steps 1 thru 4.

14-484. Special Inspection. To perform the Special Inspection of the SAR Swimmer's Mask, proceed as follows:

1. Inspect rubber face seal and strap for cuts, tears, abrasions, deterioration, corrosion and contaminants.

2. Inspect glass for cracks, scratches and security.

3. Inspect chemlight bar or clamp for security of attachment. If required, attach chemlight bar in accordance with paragraph 14-486.

4. Inspect buckles for damage.

5. Repair in accordance with paragraph 14-485.

14-485. REPAIR. Repairs are limited to cleaning, replacement of chemlight bar/clamp, head strap and clips.

14-486. Chemlight Bar Attachment and Replacement (Wraparound and Wraparound II Only).

1. Remove two nuts located at top of mask frame.

2. Place chemlight bar on top of mask frame with plastic bracket opening facing inward.

3. Replace nuts on top of chemlight bar and tighten.

14-487. Chemlight Clamp Replacement (Sherwood Magnum 4 Only).

NOTE

Refer to table 14-1 for parts list.

1. Remove nut from clamp. Be careful not to tear silicone face seal.

2. Place new clamp on mask frame insert screw from top. Use a new locking nut and tighten.

14-488. Head Strap and Clips. When replacing clips, replace both at the same time.

14-489. CLEANING. Cleaning shall be the responsibility of the SAR Crewman.

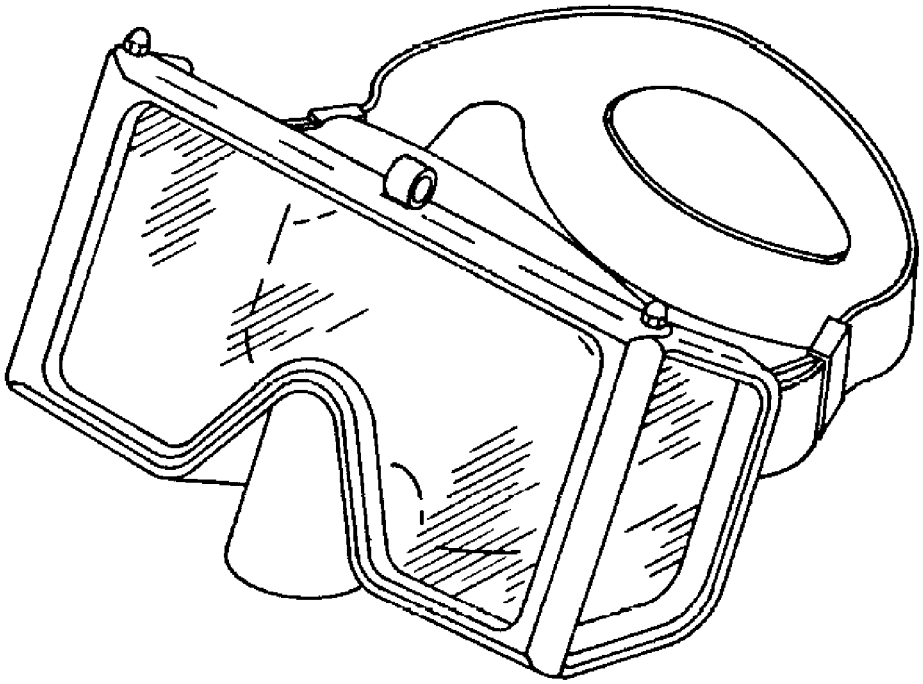

WRAPAROUND AND WRAPAROUND II

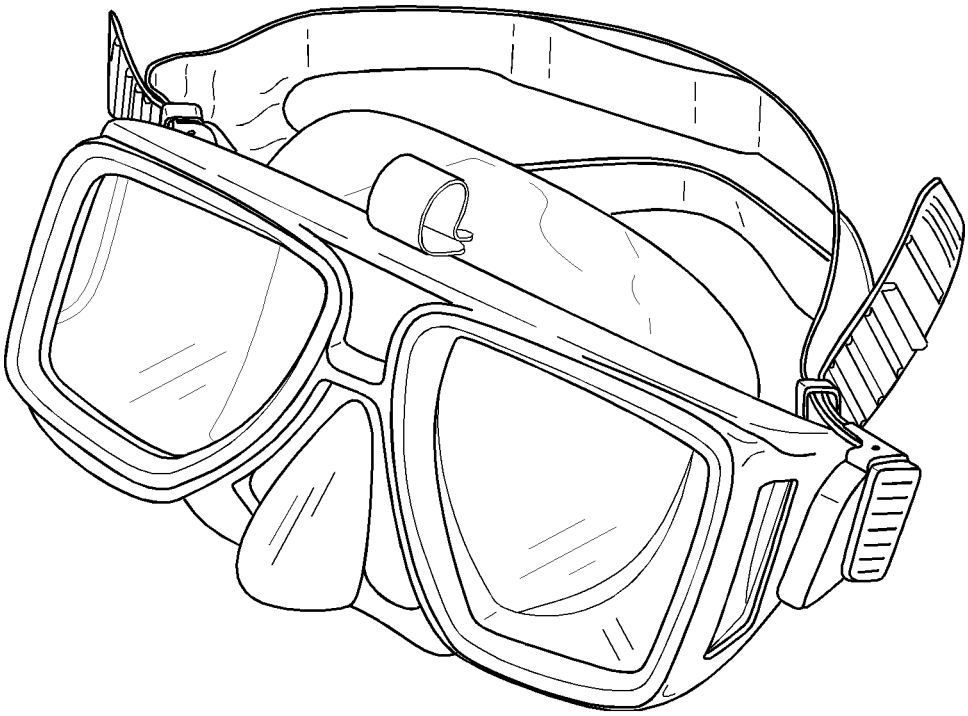

SHERWOOD MAGNUM 4

014059

Figure 14-59. SAR Swimmer's Masks

Section 14-24.8. SAR Swimmer's Snorkel

14-490. DESCRIPTION.

14-491. The SAR Swimmer's Snorkel (figure 14-60) is made of a flexible hose, soft molded rubber mouthpiece, plastic hose and mask strap.

14-492. MODIFICATION.

14-493. There are no modifications to the snorkel that are required or authorized.

14-494. MAINTENANCE.

14-495. INSPECTION. The SAR Swimmer's Snorkel shall be subjected to a Place-In-Service Inspection and a Special Inspection. Refer to table 14-1 for required inspection cycles.

14-496. Place-In-Service Inspection. The Place-In-Service Inspection shall be performed in accordance with paragraph 14-497, steps 1 thru 3.

14-497. Special Inspection. To perform the Special Inspection of the SAR Swimmer's Snorkel, proceed as follows:

1. Inspect for cracks, abrasions, deterioration and contaminants.

2. Inspect mouthpiece for security of attachment to upper tube.

3. Inspect mask strap for cracks, stretch marks and deterioration.

4. Repair in accordance with paragraph 14-498.

14-498. REPAIR. Repairs are limited to cleaning and the replacement of the mask strap.

14-499. CLEANING. Cleaning is the responsibility of the SAR crewman.

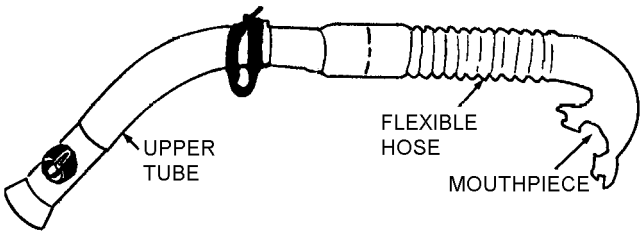

(TYPE 2 ILLUSTRATED)

014060

Figure 14-60. SAR Swimmer's Snorkel, MXK-784/P22P-10(V)

Section 14-24.9. SAR Swimmer's Fins

14-500. DESCRIPTION.

14-501. The SAR Swimmer's Fins (figure 14-61) are made of a solid pliable rubber synthetic material. The strap and buckle are designed to be removed and replaced.

14-502. MODIFICATION.

14-503. There are no modifications to the Swimmer's Fins that are required or authorized.

14-504. MAINTENANCE.

14-505. INSPECTION. The SAR Swimmer's Fins shall be subjected to a Place-In-Service Inspection and a Special Inspection. Refer to table 14-1 for required inspection cycles.

14-506. Place-In-Service Inspection. The Place-In-Service Inspection shall be performed in accordance with paragraph 14-507, steps 1 through 3.

14-507. Special Inspection. To perform the Special Inspection of the SAR Swimmer's Fins, proceed as follows:

1. Inspect for cuts, abrasions, deterioration and contaminants.

2. Inspect ankle strap for elasticity.

3. Inspect metal buckles for corrosion and security of attachment.

4. Repair in accordance with paragraph 14-508.

14-508. REPAIR. Repairs are limited to the removal of corrosion, cleaning and the replacement of buckles and ankle strap.

14-509. CLEANING. Remove corrosion from metal buckles in accordance with NAVAIR 01-1A-509 manual. All other cleaning shall be the responsibility of the SAR crewmember.

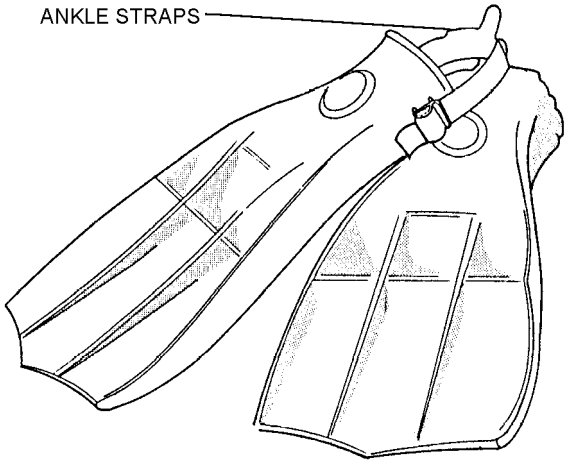

Figure 14-61. SAR Swimmer's Swim Fins, MXU-779/P22P-20(V)

Section 14-24.10. Rescue Mountain Boots

14-510. DESCRIPTION.

14-511. The Rescue Mountain Boots are designed for rough or mountainous terrain.

14-512. MODIFICATION.

14-513. There are no modifications to the Rescue Boot that are required or authorized.

14-514. MAINTENANCE.

14-515. The SAR crewmember is responsible for the inspection and upkeep of the Rescue Mountain boot. Maintenance shall consist of cleaning and polishing to prevent deterioration of the leather. Boots that are damaged or worn shall be replaced.

14-516. INSPECTION. The Rescue Mountain Boots shall be subjected to a Place-In-Service Inspection and a Special Inspection. Refer to table 14-1 for required inspection cycles.

14-517. Place-In-Service Inspection. The Rescue Mountain Boots shall be visually inspected to ensure the boots are not damaged prior to issue.

14-518. Special Inspection. The Rescue Mountain Boots shall be visually inspected to ensure the boots are not damaged.

Section 14-24.11. SAR Signaling Sleeve

14-519. DESCRIPTION.

14-519A. The Signaling Sleeves are a slip-on arm sleeve designed to enhance the visibility, both at night and in daytime. They are made from bright yellow nylon fabric with four 1-inch bands of solas grade reflective material sewn around the sleeves with elastic upper and lower cuffs.

14-520 MODIFICATION. There are no modifications authorized.

14-521. MAINTENANCE.

14-522. INSPECTION. The Signaling Sleeves shall be inspected upon issue and every 90 days thereafter to coincide with the inspection schedule of the assembly in which they are installed.

NOTE

Report Place in Service discrepancies in accordance with COMNAVAIRFORINST 4790.2.

14-523. Place-In-Service Inspection. The Signaling Sleeves shall be visually inspected for rips, cuts, security of reflective tape and elastic bands.

14-524. Special Inspection. Inspect the Signaling Sleeve as follows:

NOTE

To extend life to sleeves, minimize folds to reflective markings.

1. Inspect for rips, cuts, security of reflective tape and elastic bands, abrasions, deterioration, worn stitching and excess wear. Repair in accordance with paragraph 14-525. Clean in accordance with paragraph 14-526.

2. SAR crewman. After exposure to salt water, chlorinated water or chemicals, rinse sleeves thoroughly with fresh water and allow to air dry.

14-525. REPAIR. Repairs are limited to minor re-stitching of broken threads. No more than five repairs per sleeve. Replace sleeves when necessary.

14-526. CLEANING. Hand wash in mild soap and fresh water. Let air dry.

NUMERICAL INDEX

Part Number	Figure and Index Number	SM&R Code
AN25-54	14-33-26	PAOZZ
AN26-54	14-33-11	PAOZZ
	14-33-18	PAOZZ
AN320-6	14-33-20	PAOZZ
AN3C-14	14-28-21	PAOZZ
	14-29-21	PAOZZ
AN425A	14-33-7	PAOZZ
AN935-516	14-33-30	PAOZZ
AN960C10	14-28-22	PAOZZ
	14-29-22	PAOZZ
AN960-C816-L	14-5-4	XAOZZ
AN960PD416L	14-33-6	PAOZZ
AN960PD516	14-33-25	PAOZZ
AN960PD616	14-33-13	PAOZZ
	14-33-19	PAOZZ
	14-33-21	PAOZZ
BOLT	14-28-20	PAOZZ
	14-29-20	PAOZZ
BRACKET	14-28-18	
	14-29-18	PAOZZ
FLOAT	14-28-8	PAGZZ
	14-28-9	PAGZZ
	14-29-8	PAOZZ
	14-29-9	PAOZZ
K26-1000-9	14-33-	PAOZZ
K26-1001-1	14-33-31	MGGZZ
K26-1005-1	14-33-8	PAOZZ
K26-1008-11	14-33-23	PAOZZ
K26-1009-11	14-33-3	PAOZZ
K26-1010-11	14-33-12	PAOZZ
K26-1017-1	14-33-1	PAOZZ
K26-1018-11	14-33-10	PAOZZ
K26-1019-11	14-33-15	PAOZZ
K26-1021-1	14-33-32	PAOZZ
K26-1042-3	14-33-16	PAOZZ
K26-1083-1	14-33-28	PAOZZ
MIL-S-22499	14-33-4	XBGZZN
MS10827-8	14-5-2	XAOZZ
MS17825-3	14-28-23	PAOZZ
	14-29-23	PAOZZ
MS17984-408	14-28-25	PAOZZ
	14-29-25	PAOZZ
MS18027-2	14-5-6	PAOZZ
MS18027-2A	14-5-	PAOGG
MS18027-6	14-5-5	XAOZZ
MS18027-9	14-5-3	XAOZZ
MS20074-06-05	14-33-29	PAOZZ
MS20364D428	14-3-3	PAOZZ
	14-3-8	PAOZZ
MS20364D624	14-3-14	PAOZZ
MS20613-3C14	14-5-1	XAOZZ

Part Number	Figure and Index Number	SM&R Code
MS22018-1	14-33-9	PAOZZ
MS22020-1	14-28-26	
	14-29-26	PAOZZ
MS24665-151	14-28-24	PAOZZ
	14-29-24	PAOZZ
MS24665-300	14-33-17	PAOZZ
MS24665-379	14-33-2	XBGZZN
MS90382-1	14-3-	PAOGG
MS90382-10	14-3-12	XAOZZ
MS90382-11	14-3-6	XAOZZ
MS90382-2	14-3-9	XAOZZ
MS90382-3	14-3-5	XAOZZ
MS90382-4	14-3-4	XAOZZ
MS90382-5	14-3-10	XAOZZ
MS90382-6	14-3-11	XAOZZ
MS90382-7	14-3-16	XAOZZ
MS90382-8	14-3-7	PAOZZ
	14-3-15	XAOZZ
MS90382-9	14-3-1	XAOZZ
NAS1304-16	14-3-2	PAOZZ
NAS1306-8	14-3-13	PAOZZ
NAS43DD6-94	14-33-22	XBGZZN
NAS67946	14-33-20	PAOZZ
NAS679A4	14-33-5	PAOZZ
NAS679A5	14-33-24	PAOZZ
NAS679A6	14-33-14	PAOZZ
SS51045	14-33-27	XBGZZN
STUD	14-28-10	XBGZZ
	14-29-10	PAOZZ
SUPPORT FLOAT	14-28-19	PAOZZ
	14-29-19	PAOZZ
X872-1	14-29-1	XAGZZ
X872-11	14-29-10	PAGZZ
X872-12	14-29-16	PAGZZ
X872-1314	14-29-15	PAGZZ
X872-15	14-29-17	XAGZZ
X872-16	14-29-12	PAGZZ
X872-1617	14-29-11	PAGZZ
X872-17	14-29-13	XBGZZN
X872-2	14-29-2	XBGZZ
X872-21	14-29-7	XBGZZN
X872-22	14-29-14	PAGZZ
X872-3	14-29-3	XBGZZ
X872-5	14-29-3	XBGZZ
X872-6	14-29-4	XAGZZ
X872-7	14-29-5	XAGZZ
X872-8	14-29-6	PAGZZ
X872-910	14-29-7	PAGZZ
X872SF	14-29-	PAOGD
68X874	14-28-	PAOGD
68X874-1	14-28-1	XAGZZ

NUMERICAL INDEX (CONT)

Part Number	Figure and Index Number	SM&R Code
68X874-11	14-28-10	PAGZZ
68X874-12	14-28-16	PAGZZ
68X874-1314	14-28-15	PAGZZ
68X874-15	14-28-17	XAGZZ
68X874-16	14-28-12	PAGZZ
68X874-1617	14-28-11	PAGZZ
68X874-17	14-28-13	XBGZZN
68X874-2	14-28-2	XBGZZ
68X874-21	14-28-7	XBGZZN
68X874-22	14-28-14	PAGZZ
68X874-3	14-28-3	XBGZZ
68X874-5	14-28-3	XBGZZ
68X874-6	14-28-4	XAGZZ
68X874-7	14-28-5	XAGZZ
68X874-8	14-28-6	PAGZZ
68X874-910	14-28-7	PAGZZ

CHAPTER 15

DELETED

THIS PAGE INTENTIONALLY LEFT BLANK.

CHAPTER 16

HELICOPTER AIRCREW BREATHING DEVICE (HABD) SRU-40/P, SRU-40A/P, AND SRU-40B/P

Section 16-1. Description

NOTE

The Mobile Refill System, (MRS-III) is being introduced to the fleet as a replacement to the CQU-10/U. The MRS-III is the Support Equipment for filling the Survival Egress Air (SEA). The MRS-III will replace the CQU-10/U prior to the SEA being fielded in FY-07. Both the HABD and SEA will be in-service in the fleet during the transition period. This chapter addresses the operating procedures of the MRS-III for the HABD.

With the exception of using the MRS-III for filling and topping off the HABD, all other inspection criteria for the HABD shall remain the same.

16-1. GENERAL.

NOTE

For continuity throughout this chapter, the SRU-40/P, SRU-40A/P, and SRU-40B/P will be referred to as the HABD unless otherwise stated.

All three variations of the HABD are functionally and mechanically indentical and differ only in improved components.

16-2. The SRU-40/P (P/N 1586AS301-1), SRU-40A/P (P/N 1586AS301-2), and SRU-40B/P (P/N 1586AS301-3 or P/N 1028-00) Helicopter Aircrew Breathing Devices (HABD) are compact, lightweight breathing assemblies with a rated cylinder pressure of 3000 psi (figure 16-1). They are intended for emergency use by aircrew personnel on helicopter, V-22 (tilt rotor) and E-2/C-2 in the event of a ditching over water. The HABD provides emergency breathing air upon demand during egress from submerged aircraft. The device provides 1 to 3 minutes of breathing air depending upon the depth of water, water temperature, and the individual using the device.

16-3. The HABD is manufactured by U.S. Divers, INC. (CAGE 94120). The device is carried in a special pocket on the SV-2, AISAP, and AIRSAVE vests designed to accommodate the HABD. The Passenger Helicopter Aircrew Breathing Device System (PHABD) is only authorized for use by Marine Troop passengers utilizing the LPU-32/P, LPP-1/1A and Pouch Type Preserver (PTP). Refer to Chapter 9, Section 9-46 of this manual.

16-4. This manual does not apply to CNO approved Water Survival Sites. Training assets shall be maintained and inspected as outlined in a CNO approved HABD SOP manual, NAVOPMED P-1550-2, by approved water survival personnel.

16-5. CONFIGURATION.

16-6. The HABD is a two-stage device that comes in one size only. It is a compact, self-contained breathing device consisting of a First-Stage Regulator Assembly, a Second-Stage Regulator Assembly, and a hose assembly (figure 16-1).

16-7. FIRST-STAGE REGULATOR ASSEMBLY. The First-Stage Regulator Assembly consists of the First-Stage Regulator Subassembly, the pressure gage subassembly, and the cylinder. The First-Stage Regulator Subassembly reduces the cylinder pressure to 140 ±5 psi after which it is routed to the Second-Stage Regulator Assembly through the connecting hose. An indicator ring on the First-Stage Regulator Assembly displays ON/OFF status and a burst disc in the safety disc subassembly prevents over pressurization. The pressure gage subassembly has a dial gage that indicates the fill level of the attached air cylinder. Air is contained in a 1.5 cu. ft. aluminum cylinder at 3000 psi. Hydrostatic testing of the cylinder is required by the manufacturer but does not need to be retested during use due to its small diameter of 2.0 inches. Specific information is printed on the side of the cylinder. The air cylinder comes as a component of the First-Stage Regulator Assembly and cannot be ordered separately.

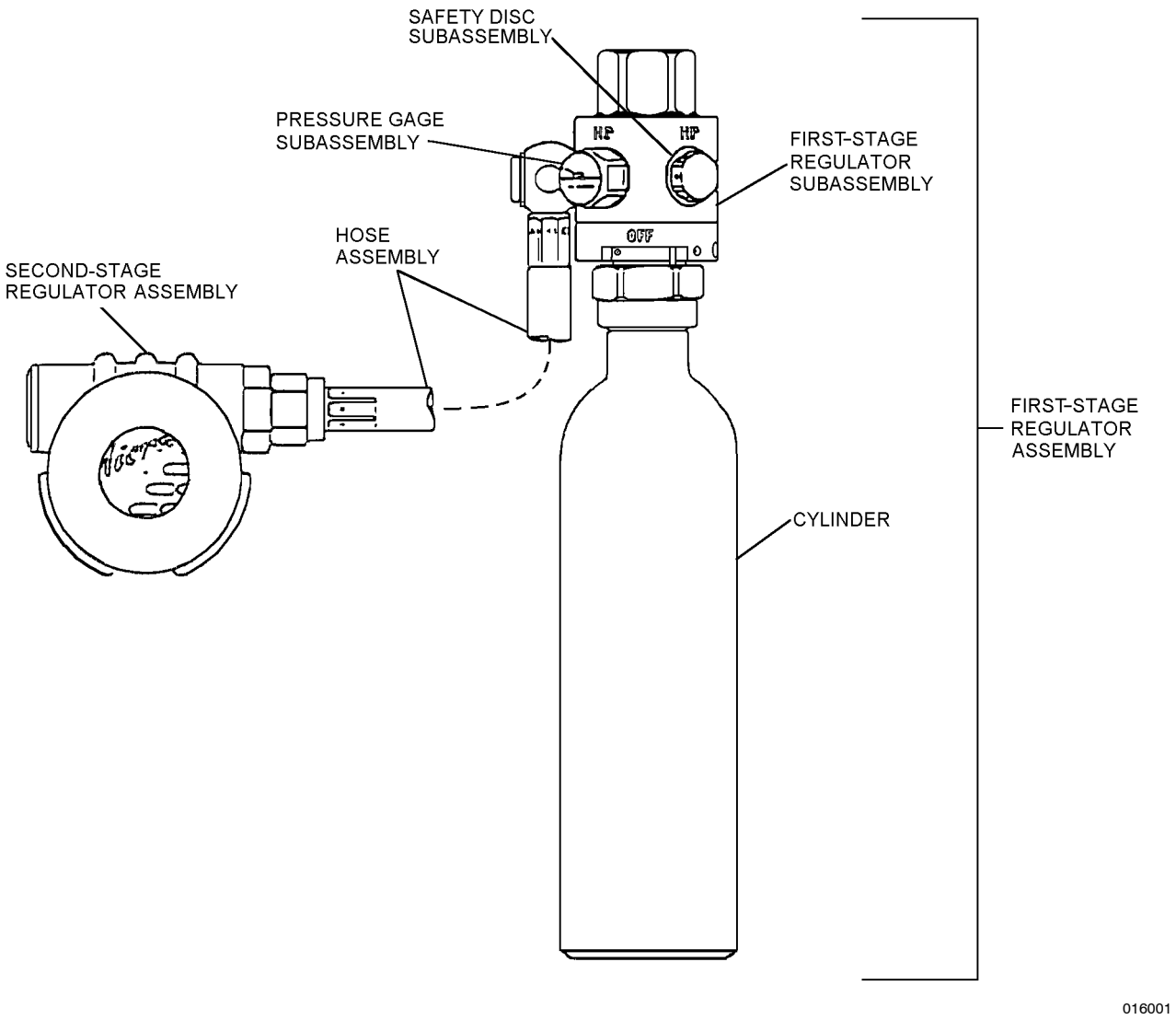

Figure 16-1. HABD Major Components

16-8. SECOND-STAGE REGULATOR ASSEMBLY. The Second-Stage Regulator Assembly consists of a mouthpiece, a mouthpiece cover, and a plastic chamber encompassing parts identified in figure 16-8. It has two exhaust valves which are covered for protection and provide greater security from negative pressure in the demand chamber. Because of the constant pressure between the two stages, breathing is relatively easy and water does not enter the mouthpiece or chamber.

16-9. HOSE ASSEMBLY. The First-Stage and Second-Stage Regulators are connected by a 20-inch flexible, low pressure hose. The hose is attached to the First-Stage Regulator with a swivel fitting. The hose is long enough to provide freedom of movement for the wearer, but not so long as to encumber egress.

16-10. SUPPORT EQUIPMENT.

16-11. The HABD is a 3000 psi unit which requires special support equipment to fill it. A Compressed Air Refill Assembly, CQU-10/U, P/N 1586AS401-1, also referred to as a Portable Refill System (PRS) is provided at both the O-Level and I-Level maintenance activities for use with the HABD. For maintenance and operating procedures on the CQU-10/U, refer to NAVAIR 16-45-716. Fleet Support Team (FST), formerly CFA, for Support Equipment is Lakehurst, NJ.

16-11A. The Mobile Refill System, (MRS-III) is the replacement to the CQU-10/U and can be utilized to service the HABD and the Survival Egress Air (SEA). For operation, maintenance and filling procedures on the MRS-III refer to TBD.

16-12. REFERENCE NUMBER, ITEMS, AND SUPPLY DATA.

16-13. Section 16-3, Illustrated Parts Breakdown, contains information on the HABD assembly. It contains figure and index numbers, reference or part numbers, description, quantity per assembly and Source, Maintenance, and Recoverability (SM&R) codes for all replaceable components of the HABD.

Section 16-2. Modifications

16-14. GENERAL.

16-15. The SRU-40/P shall be updated by comparing the configuration of the assembly with the directives listed in table 16-1.

THIS PAGE INTENTIONALLY LEFT BLANK.

Table 16-1. SRU-40/P HABD Directives

Description of Modification	Application	Modification Code
Installation of Cold Weather upgrade kit	All SRU-40/P (Note 1)	66-659
Notes: 1. After modification, the SRU-40/P shall be re-designated as SRU-40A/P.		

Section 16-3. Maintenance

16-16. GENERAL.

16-17. Maintenance of the HABD, shall consist of inspection, filling, cleaning, and replacing failed components. All maintenance shall be performed in accordance with COMNAVAIRFORINST 4790.2. Table 16-2 lists the replaceable HABD assemblies and subassemblies. To obtain another cylinder, a First-Stage Regulator Assembly must be purchased.

16-18. All maintenance involving removal or replacement of components on the HABD, with the exception of the mouthpiece, will be performed at the Intermediate Level of maintenance. O-Level maintenance personnel are authorized to top-off the cylinder and to remove and replace the mouthpiece as well as perform Pre-Flight, Post-Flight, and 90-Day Inspections. Refer to figures 16-7 and 16-8 for the assembly and disassembly of HABD components. Refer to the IPB for component, individual parts and Service Kit ordering.

16-19. Two service kits are available. Service kit, P/N 1028-81, is for the First-Stage Regulator Assembly, and service kit, P/N 1028-82, is for the Second-Stage Regulator Assembly. These kits contain mandatory servicing parts such as O-rings, washers, etc., which will be replaced any time a regulator is fully or partially disassembled unless otherwise specified in this chapter. There is no Depot Level maintenance.

16-20. An exception for this maintenance concept is made for the Naval Aviation Water Survival Training Program (NAWSTP). Those activities use the HABD for training on a continual basis. Because of the constant use of these HABDs, the manufacturer recommends they be serviced two to three times per year instead of the normal once per year. Refer to NAVOPMED P-1550-2 for maintenance procedures, available at the local Aviation Survival Training Center (ASTC).

16-21. DEFINITIONS.

16-22. Purging. Purging has two meanings as follows:

1. Act of pressing the purge cover of the HABD while in the ON position to release pressurized air from the cylinder.

2. Process of filling and releasing pressure from the HABD to remove moisture and other debris that may have entered the unit.

16-23. Topping-off. Process of recharging the HABD when the pressure gage needle reads in the red zone (below 2700 psi).

16-24. Filling. Process of recharging the HABD after the unit's cylinder has been emptied.

Table 16-2. HABD Components

Component	Quantity Required	Part Number (SRU-40/P)	Part Number (SRU-40A/P)	Part Number (SRU-40B/P)
System	1	1586AS301-1	1586AS301-2	1586AS301-3 1028-00
First-Stage Regulator Assembly (includes cylinder)	1	M1006-74	1006-74	1028-74
First-Stage Regulator Subassembly	1	M1006-71	1006-71	1028-71
Pressure Gage Subassembly	1	M1006-73	1028-73	1028-73
Safety Disc Subassembly	1	0502-41	0502-41	0502-41
Second-Stage Regulator Assembly	1	M1006-72	1028-72	1028-72
Mouthpiece	1	1058-31	1058-31	1058-31
Hose Assembly	1	M1006-75	1028-75	1028-75
Hard Purge Cover	1		1006-52	1006-52
Exhaust Cover	1		1001-09	1001-09

16-25. INSPECTIONS.

NOTE

HABD units that have been completely depleted of air for more than two hours must be inspected for internal contamination. If contamination is found, clean unit in accordance with paragraph 16-46 and purge the unit in accordance with paragraph 16-43. If corrosion is found, replace unit.

16-26. With the exception of Pre-Flight and Post-Flight Inspections, inspections of the HABD shall be recorded on appropriate forms in accordance with COMNAVAIRFORINST 4790.2. The required inspections for the HABD are described in the following paragraphs:

NOTE

During any inspection, if the pressure gage is not in the green zone (2700 - 3000 psi) with the HABD in the ON position, it will be necessary to top-off or purge and refill the unit.

16-27. PLACE-IN-SERVICE INSPECTION. The HABD shall be given a Place-In-Service Inspection at I-Level. The Place-In-Service Inspection consists of the following:

NOTE

If existing labels show signs of wear, etch the serial number and configuration of bottle (i.e. SRU-40/P, SRU-40A/P, or SRU-40B/P) on the flat area of the cylinder bottom using an electric engraving tool.

Failure of the HABD during any portion of the Place-In-Service Inspection renders the unit non-RFI and must be reported in accordance with COMNAVAIRFORINST 4790.2.

1. Inspect the device for external damage, dents, cracks, corrosion, and cylinder markings (figure 16-2).

WARNING

Failure to check security of the ON/OFF indicator ring set screw may cause cylinder and first-stage regulator subassembly to separate resulting in the cylinder becoming a projectile, which could cause serious injury or death.

2. Inspect all components for security of attachment.

a. Inspect ON/OFF indicator ring for security of attachment. If found loose, re-tighten set screw in accordance with paragraph 16-63, steps 28 thru 30. Apply torque sealant (F-900) to set screw.

3. Visually inspect the condition of the hose assembly along its length for signs of deterioration or damage, such as cuts, cracks, blisters, abrasion, or corrosion of the fittings.

4. There are two different documentation procedures for the HABD. They are as follows:

NOTE

All SRU-40A/P HABD's will have a manufacturer's label and a retrofit label on cylinder identifying it as an SRU-40A/P. Not all SRU-40B/P (black cylinder) HABD's will have a manufacturer's label on the cylinder.

a. For HABD's with a manufacturers label use S/N from the label. If the identification label shows signs of becoming separated from the unit or is becoming illegible, engrave the serial number and configuration of the bottle on the flat area of the cylinder bottom using an electric engraving tool.

b. For HABD's without a manufacturer's label use S/N off the cylinder neck.

5. Inspect the chrome finish of the first-stage regulator to check for any flaking, chipping or other damage.

6. Remove exhaust cover (8, figure 16-8) from Second-Stage Regulator Assembly. Refer to paragraph 16-56, steps 20 and 21 for removal procedures.

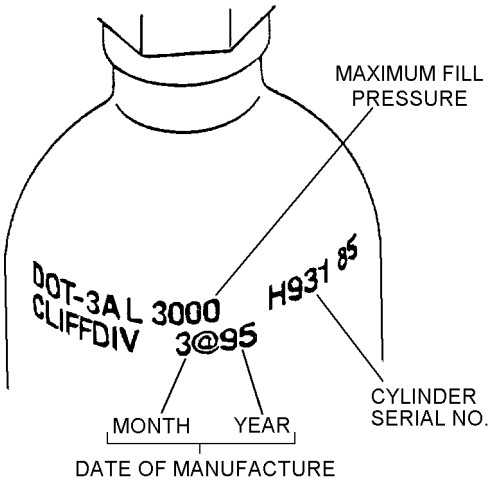

016002

Figure 16-2. Cylinder Markings

7. Inspect exhaust valves (7, figure 16-8) for proper seating. To be properly seated, exhaust valves should be lying flat, completely covering entire exhaust ports. If found folded or tucked, lift folded or tucked edge of exhaust value until it is lying flat and covering entire exhaust port.

8. If exhaust valves are found to be damaged, remove and replace with new exhaust valves from Service Kit. Refer to paragraph 16-56, step 22 for removal of exhaust valve(s) and paragraph 16-64, step 17 for replacement procedures.

9. Install exhaust cover (8, figure 16-8) to Second-Stage Regulator Assembly. Refer to paragraph 16-64, step 18 for replacement procedures.

NOTE

Torque sealant used on purge cover must be visible. Do not use black.

10. Inspect hard purge cover for tightness and apply torque sealant to purge cover in two locations opposite of each other.

WARNING

The HABD is designated compatible for use only with normal, atmospheric, compressed air. DO NOT attempt to fill with other gasses, including pure oxygen, or air which has been enriched with oxygen exceeding 22% in content. Failure to observe this WARNING may result in serious injury or death due to fire and explosion, or the serious deterioration and failure of the equipment.

11. Purge and fill the HABD in accordance with paragraph 16-43.

11a. Refer to Paragraph 16-44a when purging and filling with the MRS-III.

12. Perform Leak Test in accordance with paragraph 16-48. If leakage is detected, report discrepency in accordance with COMNAVAIRFORINST 4790.2.

13. If no leaks are evident, the HABD is ready for issue (RFI).

14. Record inspection date and data on appropriate forms in accordance with COMNAVAIRFORINST 4790.2.

16-28. PRE-FLIGHT INSPECTION. The pre-flight inspection shall be performed on the HABD prior to each flight by the aircrewmember to whom the unit is assigned and shall consist of the following:

WARNING

Strict compliance of pre-flight inspections shall be adhered to by all aircrewmembers utilizing the HABD.

NOTE

Report any discrepancies to maintenance personnel immediately.

1. Visually inspect the device for evidence of malfunction or external damage.

2. Inspect mouthpiece for cuts, cracks, cleanliness, and overall integrity.

3. Carefully inspect the low pressure hose to ensure it is securely connected to both the First and Second-Stage Regulators. Inspect the hose for cuts, cracks, blisters, abrasions or other damage, and inspect the fittings for corrosion.

4. Prior to pressurizing unit, with the ON/OFF in the OFF position, place regulator mouthpiece in the mouth and proceed to inhale. No air should flow through the mouthpiece. If air flow is detected, report discrepancy to maintenance personnel immediately.

WARNING

If cylinder rotates more than one complete turn while turning to the ON position, STOP TURNING CYLINDER, and immediately report malfunction to maintenance personnel. Continuing to rotate cylinder may cause separation of the cylinder from the first-stage regulator subassembly resulting in the cylinder becoming a projectile, which could cause serious injury or death.

5. While holding the First-Stage Regulator securely, slowly turn the HABD cylinder counter-clockwise until the ON/OFF indicator pin can be sighted through the small aperture marked ON (figure 16-3).

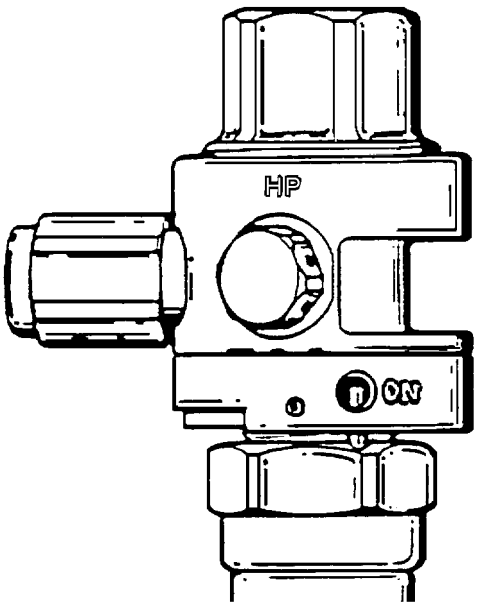

016003

Figure 16-3. HABD Valve ON Position

NOTE

Step 6 may be omitted for units deployed to remote locations where no immediate Intermediate level maintenance support is available for refilling the CQU-10/U recharging unit.

6. Place regulator mouthpiece in mouth and inhale and exhale. Regulator should deliver air upon inhalation without excessive effort or fluttering of the second-stage diaphragm. There should be no fluttering or sticking of the second-stage exhaust valves when exhaling. If any of these problems occur report discrepancy to maintenance personnel immediately.

7. While the valve is in the ON position, examine the pressure gage (figure 16-4) to determine if the cylinder is ready for issue. The pressure gage should read in the green zone. After ensuring that the system is full, listen for any obvious signs of leakage from the system, including free flow from the Second-Stage Regulator. Report any HABD discrepancies to maintenance personnel immediately.

CAUTION

The pressure gage registers 3000 psi when the HABD is full. A reading in the green zone indicates above 2700 psi. The unit shall be topped-off if the pressure registers below 2700 psi (in the red zone). It may be topped-off if the pressure is higher. However, any time the pressure is low, depending upon its usage, a leak may be present. Check the HABD as indicated above and monitor it afterwards taking its usage into account.

8. Quickly press and release the purge button on the Second-Stage Regulator. A short burst of air should escape when the button is depressed and stop when it is released. Listen to ensure airflow has stopped.

9. Inspect purge cover to ensure that torque sealant is present. If not, have maintenance personnel check purge cover for tightness and re-apply torque sealant.

10. If no discrepancies have been noted, leave the HABD in the ON position for the flight.

16-29. POST-FLIGHT INSPECTION. The Post-Flight Inspection shall be performed after each flight by the aircrewmember to whom the unit was issued. The Post-Flight Inspection shall consist of the following:

CAUTION

Over-tightening of bottle may damage regulator or indicator pin. DO NOT OVER TIGHTEN. While turning off the bottle there will be a significant increase in torque pressure when the bottle reaches the off position. When the bottle is off the indicator pin should be positioned somewhere within the OFF aperture. Refer to figure 16-5.

1. Turn the HABD off by securely holding the First-Stage Regulator and slowly rotating the unit's cylinder clockwise until the indicator pin is in the OFF position (figure 16-5). Do not overtighten. Depress the purge button on the Second-Stage Regulator to completely depressurize the hose and Second-Stage Regulator. Wait at least five minutes, and depress the Second-Stage Regulator Assembly purge button to determine whether any air pressure has built up inside the low pressure hose and second-stage valve.

CAUTION

If a build-up of air pressure occurs inside the low pressure hose and Second-Stage Regulator after the HABD valve has been turned to the OFF position and the system depressurized, the unit must be routed to the Intermediate Level maintenance for repair.

2. Inspect device for external damage.

016004

Figure 16-4. HABD Pressure Gage

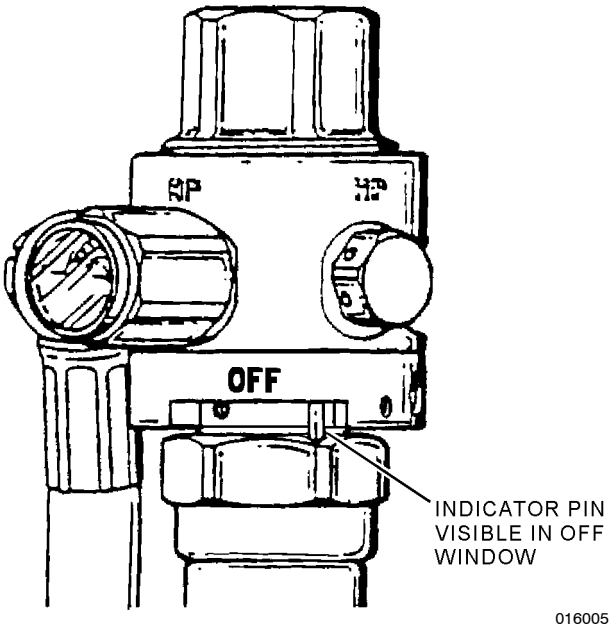

Figure 16-5. HABD Valve OFF Position

16-30. 90-DAY INSPECTION. The 90-Day Inspection shall be performed by a qualified Aircrew Survival Equipmentman at the O-Level as follows:

1. Visual Inspection.

a. Remove HABD from survival vest pocket.

WARNING

Failure to check security of the ON/OFF indicator ring set screw may cause cylinder and First-Stage Regulator Subassembly to separate resulting in the cylinder becoming a projectile, which could cause serious injury or death.

b. Inspect all hardware for security of attachment and/or damage.

(1) Inspect ON/OFF indicator ring for security of attachment. If found loose, re-tighten set screw in accordance with paragraph 16-63, steps 28 thru 30. Apply torque sealant (F-900) to set screw.

c. Verify cylinder markings (figure 16-2).

d. Check mouthpiece for cleanliness, cracks, discoloration, and security. Clean mouthpiece, if needed, in accordance with paragraph 16-47, step 1, or replace mouthpiece as follows:

(1) Carefully snip the plastic mouthpiece cable tie and remove the mouthpiece (figure 16-8).

(2) Install the new mouthpiece onto the Second-Stage Regulator, in accordance with paragraph 16-64, step 19.

e. Inspect regulator for external damage, cracks, and dents. Inspect for signs of dirt or salt contamination. If necessary, clean, in accordance with paragraph 16-46.

NOTE

Torque sealant used on purge cover must be visible. Do not use black.

f. Inspect purge cover to ensure that torque sealant is present. If not, check purge cover for tightness and re-apply torque sealant to purge cover in two locations opposite of each other.

2. Functional Check.

a. Turn HABD on and check pressure gage for full charge. The pressure gage should read in the green zone at 2700 to 3000 psi (figure 16-4). Top-off, if required, in accordance with paragraph 16-41 or paragraph 16-44a when utilizing the MRS-III for topping off and filling.

b. Quickly press and release the purge button to ensure proper operation of regulator components (i.e. the sound of vented air will be noticeable when pressed and the sound of vented air should immediately stop when released).

3. Perform Leak Test in accordance with paragraph 16-48.

4. If no leaks were detected, ensure HABD is turned off and return unit to survival vest pocket.

5. Record 90-day inspection date and data on appropriate form in accordance with COMNAVAIRFORINST 4790.2.

16-31. 360-DAY INSPECTION. The 360-Day Inspection shall be performed on the HABD by a qualified Aircrew Survival Equipmentman at I-Level maintenance as follows:

Materials Required

Quantity	Description	Reference Number
1	First-Stage Regulator Service Kit	1028-81
2	Second-Stage Regulator Service Kit	1028-82

CAUTION

Discard all replaced parts. Do not reuse.

1. The HABD shall be thoroughly cleaned, inspected and overhauled. All cleaning shall be accomplished in accordance with paragraph 16-46. Refer to the following paragraphs for overhaul instructions.

a. Disassemble the First-Stage Regulator Assembly in accordance with paragraph 16-55.

b. Utilizing service kit, reassemble First-Stage Regulator Assembly in accordance with paragraph 16-61.

c. Disassemble the Second-Stage Regulator Assembly in accordance with paragraph 16-56.

d. Utilizing service kit, reassemble Second-Stage Regulator Assembly in accordance with paragraph 16-64.

e. Perform final adjustment in accordance with paragraph 16-65.

f. Perform Leak Test in accordance with paragraph 16-49.

g. Refill or top-off HABD as necessary.

2. Record inspection date and data on appropriate forms in accordance with COMNAVAIRFORINST 4790.2.

16-32. BREATHING AIR SOURCES.

WARNING

Ensure compressors (Bristol and/or Bauer) have been modified in accordance with SEC 5440 or 5441 as applicable. Maintenance and Inspection criteria for air compressors used to fill the CQU-10/U Portable Refill Station (PRS) or Mobile Refill System (MRS-III) shall be strictly adhered to.

16-33. The source of breathing air for the SRU-40 Series is the Compressed Air Refill Assembly, CQU-10/U (also known as the Portable Refill System (PRS)). Refer to NAVAIR 16-47-716. The use of the Mobile Refill System (MRS-III) is authorized for use with the SRU-40 series (HABD).

16-34. STANDARDS FOR AIR PURITY.

NOTE

For air purity standards refer to Chapter 6 of this manual.

16-35. GENERAL SAFETY.

16-36. General safety regulations governing the handling and use of compressed gas cylinders are contained in both NAVSEA and NAVOSH instructions. Persons responsible for handling, storing, and charging refill cylinders must be familiar with these regulations. Safety rules applying particularly to refill cylinders are contained in table 16-3. Because refill cylinders are subject to continuous handling, and because of the hazards posed by a damaged unit, close adherence to these rules is mandatory.

16-37. AIR COMPRESSORS. Safety considerations are of primary importance when working with or around high pressure air, such as that produced by an air compressor. The following warning describes the dangers involved when handling high pressure air or cylinders charged with high pressure air. If a question arises concerning the handling, connecting and operating of high pressure air devices, contact your supervisor, quality assurance personnel, or safety officer.

WARNING

When using high pressure air, the danger exists of cutting through a person's flesh or severely damaging an eye; of being hurt by a hose getting loose and flailing about and whipping someone or nearby equipment; or of a pressurized unit, such as a refill cylinder or HABD cylinder, getting loose and acting as a missile. There is also the danger of over-pressurizing a cylinder and causing it to explode. Refer to table 16-3 for safety precautions and handling.

16-38. REPLENISHING HABD AIR CYLINDER (CQU-10/U USE ONLY).

16-39. The air supply in the HABD is replenished by either topping-off or purging and refilling the air cylinder. Topping-off or purging and refilling shall be accomplished only by the use of the CQU-10/U Compressed Air Refill Assembly.

16-40. TOPPING-OFF REQUIREMENT (CQU-10/U USE ONLY). There are four critical HABD readings of the pressure gage when determining the requirement for topping-off or purging and refilling of the unit when the unit is turned on. These readings are described in the following subparagraphs:

1. 3000 psi – Pressure gage needle points to the 3 on the dial gage. This is the maximum operational HABD pressure. No action required.

2. 2700 psi – Pressure gage needle points to the low end of the green zone on the dial gage. This is the lower pressure limit allowable for flight. Cylinder may be topped-off if desired (paragraph 16-41).

3. Above 0 psi (needle moves when unit turned on) but below 2700 psi – Pressure gage needle is in the red zone. Cylinder must be topped-off (paragraph 16-41).

4. If no movement of the pressure gage needle is observed when the HABD is turned on, the cylinder may require purging and refilling. However, at lower pressures, there may not be enough pressure in the cylinder to register on the pressure gage, yet there may be enough air in the cylinder to avoid having to purge the cylinder. To test this, with the HABD on, press the purge cover quickly. If air can be heard escaping, there is sufficient air in the system to require that the unit only be topped-off (paragraph 16-41). If no air is heard escaping, and the HABD has remained empty for more than 2 hours, the HABD must be purged and refilled (paragraph 16-43).

Table 16-3. Safety Precautions for Charging and Handling Refill Cylinders

1.	Use only compressed air for filling conventional cylinders, never OXYGEN. (The color code for air is black and the color code for oxygen is green.)
2.	Make sure all fittings are tight or torqued according to maintenance instructions before pressurizing any lines.
3.	Avoid excessive heat when charging.
4.	Store filled cylinders in a cool, shaded area. Never leave in direct sunlight.
5.	Handle charged cylinders with care: if dropped or damaged, or if the cylinder valve is accidentally knocked loose, the cylinder can become a lethal missile. A cylinder charged to 3000 psi has enough energy to jet-propel itself through the air for some distance, tearing through any obstructions on the way.
6.	Cylinders should always be properly secured aboard ship and not allowed to freely roll around.
7.	Never work on a charged cylinder except to make final adjustments.
8.	Always use gages to measure cylinder pressure. Never have your face near the dial of a gage to which pressure is being applied.
9.	Do not attempt to fill any cylinder if the inspection date has expired or if it appears to be substandard in any way. Dents, severe rusting, bent valves, "frozen" reserve mechanisms, or evidence of internal contamination (water, scales of rust) are all signs of unsuitability. See NAVSEAINST 10560 Series.
10.	**Maximum cylinder charging rate shall not exceed 500 psi per minute, with a two minute cool down period before continuing refilling.**

16-41. TOPPING-OFF PROCEDURE (CQU-10/U USE ONLY). The Top-Off procedure can be accomplished by either I-Level or O-Level maintenance personnel.

NOTE

If there is no movement of pressure gage needle when ON/OFF valve is turned to the ON position, the HABD device may need to be purged and refilled. If the unit becomes completely discharged (i.e. no air is heard escaping when the purge button is depressed), and the unit has been empty for more than 2 hours, the cylinder shall be inspected and the device purged. Refer to paragraph 16-43 for detail purging instructions.

16-42. The 3500 psi high-pressure air cylinder of the CQU-10/U Compressed Air Refill Assembly is designed to be used to top-off the HABD system. The top-off procedures are as follows:

Materials Required

Quantity	Description	Reference Number
As Required	Christo-Lube (Note 1)	MCG-111 (2 oz. Tube, NIIN 01-441-9016)

Notes: 1. Christo-Lube may be open purchased from:
Lubrication Technology Inc.
310 Morton St.
Jackson, OH 45640
Phone - 740-286-2644

Support Equipment Required

Quantity	Description	Reference Number
	Compressed Air Refill Assembly, CQU-10/U	1586AS401-1
1	Torque Wrench (micrometer) 30 - 150 lbs-in	—
1	11/16-inch Hex Socket	—
1	O-ring	8203-19

WARNING

DO NOT attempt to top-off the HABD cylinder with more than 3000 psi. Doing so may seriously weaken and damage the cylinder, and may cause it to rupture and explode, possibly resulting in serious injury or death.

The HABD is designated compatible for use only with normal, atmospheric, compressed air. DO NOT attempt to fill with other gasses, including pure oxygen, or air which has been enriched with oxygen exceeding 22% in content. Failure to observe this WARNING may result in serious injury or death due to fire and explosion or to the serious deterioration and failure of the equipment.

CAUTION

Before topping-off the HABD, refer to safety precautions in table 16-3 and NAVAIR 16-45-716, CQU-10/U Refill Assembly System manual for operational instructions.

Top-off the HABD and, if a leak is suspected, perform a Leak Test in accordance with paragraph 16-49. If the HABD requires topping-off and there has been no use or repair on it, forward the unit to I-Level maintenance for more extensive leak testing.

Ensure all fittings and adapters are free of dirt and contaminants.

1. Open the CQU-10/U supply valve and check the pressure on the supply gage to ensure that it reads a minimum of 3000 psi (the maximum of 3500 psi is optimal). Before attempting to fill the HABD, ensure that the unit is completely dry, especially around the area of the First-Stage Regulator Subassembly.

CAUTION

When turning the HABD off, do not overtighten. Overtightening may damage regulator or indicator pin.

2. Ensure the HABD is in the OFF position. If necessary, turn the system off by holding the First-Stage Regulator Assembly securely and turning the cylinder clockwise until it stops. The indicator pin should be positioned inside the aperture marked OFF (figure 16-5).

3. Depress the Second-Stage Regulator Assembly purge button to ensure that the hose and Second-Stage Regulator Assembly are completely depressurized.

4. Apply a 11/16-inch hex socket to the pressure gage subassembly located between the high pressure (HP) safety disc port and the low pressure (LP) swivel port (figure 16-6). Turn the pressure gage subassembly counter-clockwise and remove the gage.

5. Closely inspect the port opening to ensure that no debris, residue, or moisture is present.

CAUTION

If moisture is found inside port opening, it indicates that water may have entered the First-Stage Regulator and cylinder. DO NOT attempt to fill or use cylinder until system has been inspected and purged in accordance with paragraph 16-43.

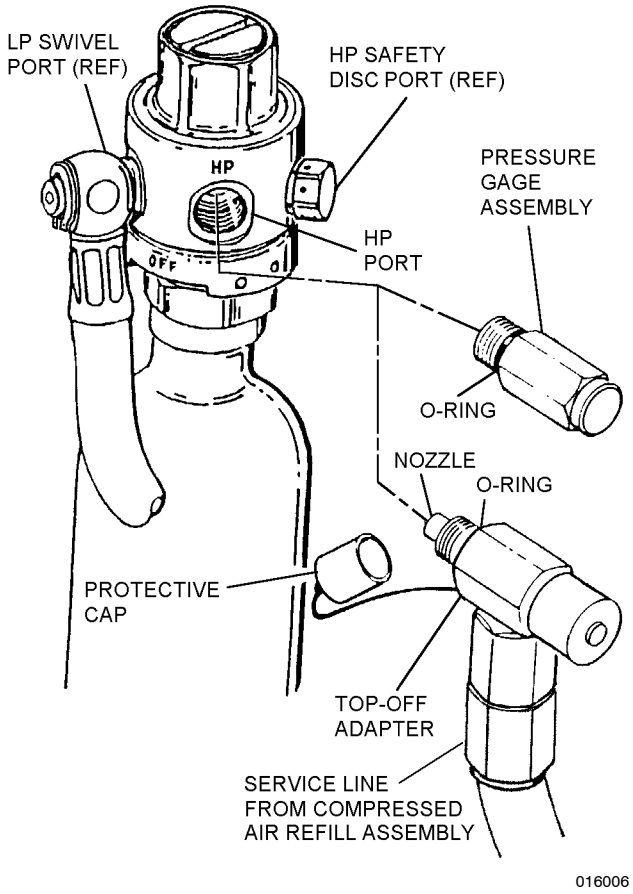

Figure 16-6. Pressure Gage Removal and Top-Off Adapter Installation

6. Remove the protective cap from the refill nozzle of the top-off adapter. Inspect the nozzle to ensure the O-ring is present and seated evenly at the base of the threads (figure 16-6).

CAUTION

DO NOT apply a wrench or otherwise overtighten the top-off adapter into the First-Stage Regulator.

NOTE

If protective cap is not present, requisition from supply, P/N AN 929-4C, NIIN 00-720-1508.

7. Apply a light coating of Christo-lube to the O-ring and mate the threaded nozzle of the top-off adapter into the open HP port, and turn clockwise until hand tight.

8. While holding the First-Stage Regulator and top-off adapter securely, turn the HABD cylinder counter-clockwise until single click is felt and the ON/OFF indicator pin can be sighted through the small aperture marked "ON" (figure 16-3).

9. Place HABD in blast tube.

CAUTION

Always fill the HABD slowly. Rapid filling of the cylinder will generate heat and may result in an incomplete filling after the cylinder cools. Fill at a rate of 500 psi per minute, with a two minute cool down period to allow for cylinder cooling.

10. Begin filling the HABD by tilting the toggle valve lever slightly, ensuring the HABD cylinder is only filled in increments of 500 psi with 2 minutes intervals between fillings to allow for cylinder cooling.

11. Continue to fill the HABD cylinder until 3000 psi is achieved.

CAUTION

When turning the HABD off, do not overtighten. Overtightening may damage regulator or indicator pin.

12. Remove the HABD cylinder from blast tube. While holding the First-Stage Regulator Assembly and top-off adapter securely, turn the HABD cylinder clockwise until it stops and the indicator pin is positioned inside the aperture marked "OFF" (figure 16-5).

13. Depressurize the hose and Second-Stage Regulator by pressing the Second-Stage Regulator purge button until no airflow can be heard.

14. While holding the HABD securely, turn the top-off adapter fitting counter-clockwise and remove it from the First-Stage Regulator. Ensure O-ring on top-off adapter refill nozzle is present.

15. Inspect O-ring for signs of damage or deterioration. Replace O-ring only if necessary. Lubricate O-ring with Christo-lube and place O-ring evenly at the base of the threads on the Pressure Gauge.

16. Screw the threaded end of the pressure gage subassembly into the HP port and turn clockwise until hand tight. Using a torque wrench with a 11/16-inch hex socket, tighten the pressure gage subassembly to a torque measurement of 40 ±3 in-lb.

17. If no other HABD cylinders are to be filled, proceed to step 18. If others are to be filled, return to step 1.

18. To secure system, turn the CQU-10/U supply cylinder valve clockwise to close. Relieve pressure from the pressure regulator by holding the top-off adapter securely and tilting the toggle valve lever until all air bleeds out of system and the supply pressure gage reads zero.

19. Replace protective cap over refill nozzle of the top-off adapter.

16-43. PURGING AND FILLING THE HABD. Purging of the HABD will be performed at I-Level maintenance upon Place-In-Service, 360-Day Inspection and at any time contamination is suspected or the HABD has remained empty for more than 2 hours. When the cylinder has remained empty for more than two hours, or if contamination is suspected, the First-Stage Regulator and cylinder adapter must be removed and the cylinder inspected for contamination. If corrosion is found, replace First-Stage Regulator Assembly. However, note that at lower pressures the gage may not indicate that any air is in the cylinder, when, in fact, there is enough to avoid having to purge it. Therefore, as a secondary check with the HABD in the ON position, press the Second-Stage Regulator purge cover quickly. If air can be heard escaping, there is sufficient air in the system to require only that the HABD be immediately topped-off in accordance with paragraph 16-41.

16-44. (For CQU-10/U Only) Refer to paragraph 16-44a for filling and purging with the MRS-III. Purge the HABD in accordance with the following procedures.

Materials Required

Quantity	Description	Reference Number
As Required	Christo-Lube (Note 1)	MCG-111 (2 oz. Tube, NIIN 01-441-9016)

Notes: 1. Christo-Lube may be open purchased from:
Lubrication Technology Inc.
310 Morton St.
Jackson, OH 45640
Phone - 740-286-2644

Support Equipment Required

Quantity	Description	Reference Number
1	Compressed Air Refill Assembly, CQU-10/U	1586AS401-1
1	Torque Wrench (micrometer), 30 - 150 in-lb	—
1	11/16-inch Hex Socket	—

WARNING

The HABD is designated compatible for use only with normal, atmospheric, compressed air. DO NOT attempt to fill with other gasses, including pure oxygen, or air which has been enriched with oxygen exceeding 22% in content. Failure to observe this WARNING may result in serious injury or death due to fire and explosion or in the serious deterioration and failure of the equipment.

CAUTION

Before purging the HABD, refer to safety precautions in table 16-3 and the applicable CQU-10/U refill assembly system manual for operational instructions.

If a leak is suspected during purging and refilling, perform a Leak Test in accordance with paragraph 16-48.

Ensure all fittings and adapters are free of dirt and contaminants.

1. Open the CQU-10/U supply valve and check the pressure on the supply gage to ensure that it reads a

minimum of 3000 psi (the maximum of 3500 psi is optimal). Before attempting to fill the HABD, ensure that the entire unit is completely dry, especially around the area of the First-Stage Regulator Subassembly.

CAUTION

When turning the HABD off, do not overtighten. Overtightening may damage regulator or indicator pin.

2. Ensure that the HABD is in the OFF position. If necessary, turn the system off by holding the First-Stage Regulator securely and turning the cylinder clockwise until it stops. The indicator pin should be positioned inside the aperture marked OFF (figure 16-5).

3. Depress the Second-Stage Regulator Assembly purge button to ensure that the hose and Second-Stage Regulator Assembly are completely depressurized.

4. Apply an 11/16-inch open-end wrench to the pressure gage subassembly. Turn the pressure gage counterclockwise and remove the gage.

5. Closely inspect the HP port opening to ensure that no debris, residue, or moisture is present.

CAUTION

If moisture is present inside port opening, it indicates that water may have entered the First-Stage Regulator and cylinder. Inspect cylinder thoroughly after purging to ensure all moisture has been removed. If necessary, repeat the purging process.

6. Remove the protective cap from the refill nozzle of the top-off adapter. Inspect the nozzle to ensure the O-ring is present and seated evenly at the base of the threads (figure 16-6).

CAUTION

DO NOT apply a wrench or otherwise overtighten the top-off adapter into the first-stage regulator.

7. Apply a light coating of Christo-lube to the O-ring. Mate the threaded nozzle of the top-off adapter into the open HP port and turn clockwise by hand until hand tight.

WARNING

DO NOT attempt to fill the HABD Cylinder with more than 3000 psi. Doing so may seriously weaken and damage the cylinder, and may cause it to rupture and explode, possibly resulting in serious injury or death.

8. While holding the first-stage and top-off adapter securely, turn the HABD cylinder counter-clockwise until single click is felt and ON/OFF indicator pin can be sighted through the small aperture marked ON (figure 16-3).

9. Place HABD in blast tube.

10. Slowly tilt the toggle valve on the CQU-10/U and apply between 300 and 400 psi of pressure to the HABD.

11. Release pressure from the HABD by pressing the regulator purge button on the Second-Stage Regulator (an audible hiss should be heard) until the unit's pressure is depleted.

12. Repeat steps 10 and 11 two more times for a total of three times.

CAUTION

Always fill the HABD slowly. Rapid filling of the cylinder will generate heat and may result in an incomplete fill after it cools. Fill at a rate of 500 psi per minute, with a two minute cool down period to allow for cylinder cooling.

13. After cylinder has been purged, begin filling the HABD by tilting the toggle valve lever slightly ensuring the HABD cylinder is only filled in increments of 500 psi with 2 minutes intervals between fillings to allow for cylinder cooling.

14. Continue to fill the HABD cylinder until 3000 psi is achieved.

CAUTION

When turning the HABD off, do not overtighten. Overtightening may damage regulator or indicator pin.

15. Remove the HABD cylinder from blast tube. While holding the First-Stage Regulator Assembly and top-off adapter securely, turn the HABD cylinder clockwise until it stops and the indicator pin is positioned inside the aperture marked OFF (figure 16-5).

16. Depressurize the hose and Second-Stage Regulator by pressing the Second-Stage Regulator purge button until no airflow can be heard.

17. While holding the HABD securely, turn the top-off adapter counter-clockwise and remove it from the First-Stage Regulator. Ensure O-ring on top-off adapter refill nozzle is present.

18. Lubricate a new O-ring with Christo-lube and place O-ring evenly at the base of the threads on the pressure gage.

19. Screw the threaded end of the pressure gage subassembly into the HP port and turn clockwise until hand tight. Using a torque wrench with an 11/16-inch hex socket, tighten the pressure gage subassembly to a torque measurement of 40 ±3 in-lb.

20. If no other HABD cylinders are to be purged and filled, proceed to step 21. If others are to be purged and filled, return to step 1.

21. To secure system, turn the CQU-10/U supply cylinder valve clockwise to close. Relieve pressure from the pressure regulator by holding the top-off adapter securely and tilting the toggle valve lever until all air bleeds out of system and the supply pressure gage reads zero.

22. Replace protective cap over refill nozzle of top-off adapter.

16-44a. **Filling, Topping-Off and Purging the HABD with the MRS-III.**

16-44b. **Filling and Topping-Off Procedures.** The following procedures are for filling and topping-off the HABD with the MRS-III. The Materials Required and Support Equipment are the same as listed in paragraph 16-42 with the exception of the following Support Equipment:

Support Equipment Required

Quantity	Description	Reference Number
1	Mobile Refill System (MRS-III)	1007-10

WARNING

All WARNINGS and CAUTIONS identified in paragraph 16-42 shall be adhered to when performing the following procedures.

1. On the MRS-III ensure the Fill Valves (6) are closed. Open Supply Cylinder Valves (1) and verify that the Supply Pressure (9) reads between 3000 and 4500 psi. Verify that the Regulated Pressure Gauge (7) reads 3000 psi, +/- 100 psi. If not correct adjust the Regulated Pressure in accordance with Chapter 7 paragraph 7-26, step 5.

NOTE

Supply Cylinder Valves (1) lock in place when released. To release, push knob down while turning.

2. Prepare the HABD for servicing. Refer to paragraph 16-42, steps 2, 3, 4 and 5.

3. Remove Fill Adapter(s) (2) from adapter mounts. Inspect O-ring (s) for signs of damage. If necessary apply a light coat of Christo Lube to the O-ring. Replace O-ring if necessary, refer to Chapter 7 IPB.

4. Attach Fill Adapter (2) to the HP port on the HABD and hand-tighten. Turn the HABD to the On position by rotating the cylinder counter-clockwise and the indicator pin is visible in the On aperture. (Figure 16-3).

CAUTION

Fill the cylinders at a rate not to exceed 500 psi per minute to avoid moisture build up inside cylinder.

5. Place the HABD in Bottle Holder (4). Ensure Bleed Valves (3) are closed. Slowly open the Fill Valve (6) that corresponds to the Fill Adapter (2) being used. Watch the Fill Pressure Gauge (5) of the corresponding Fill Adapter.

6. After the cylinder(s) have reached desired pressure and cylinder(s) have cooled, close the Fill Valve(s) (6). Turn the HABD to the "Off" position. Open the Bleeder Valve (3) on the corresponding Fill Adapter (2) to vent pressure from fill hose and HABD hose and Second-stage.

7. Disconnect the Fill Adapter (2) from the HABD. Inspect O-ring on Pressure Gauge, replace if necessary.

Lubricate and re-install Pressure Gauge. Torque Pressure Gauge to a torque measurement of 40 +/- 3 in-lbs.

8. Continue with HABD maintenance.

9. When all filling operations are completed for the day, secure the MRS-III by turning off Supply Cylinder Valves (1). Firmly grasp one of the Fill Adapters (2) and point in a safe direction, bleed any remaining pressure from the high pressure lines by slowly opening the corresponding Fill Valve (6). Ensure all gauges on the MRS-III indicate no pressure.

10. Close both Bleeder Valves (3) and Fill Valves (6) on the MRS-III. Install Fill Adapters into respective Adapter Mounts and place dust cap onto Cylinder Refill Port, close and latch the MRS-III case.

16-44c. **Purging**: For purging, follow filling procedures and fill HABD to 500 psi and release pressure. Repeat two more times. Fill HABD in accordance with paragraph 16-44b.

16-45. REFILLING THE COMPRESSED AIR REFILL ASSEMBLY CQU-10/U. Refilling the CQU-10/U must be performed at I-Level maintenance. Refer to the CQU-10/U Manual (NAVAIR 16-45-716) for approved refill procedures.

16-46. CLEANING.

16-47. Cleaning of parts shall be performed at O- or I-Level maintenance, as required. O-Level maintenance personnel shall clean and disinfect mouthpieces and mouthpiece covers only. I-Level maintenance personnel shall perform steps 1 thru 5. Cleaning is performed using the following procedures:

NOTE

Cleaning, disassembly, and assembly shall be performed in a clean, dust-free environment. Do not attempt to clean rubber components except for the mouthpiece and mouthpiece cover.

Materials Required

Quantity	Description	Reference Number
As Required	Gauze Pads, Absorbent	222066
As Required	Sodium Hypochlorite Solution	A-A-1427 NIIN 00-598-7316
As Required	Detergent, General Purpose, Type 1	MIL-D-16791 NIIN 00-282-9699
	-or-	
	Soap, Laundry, Low-filter	P-S-600
As Required	White Vinegar, Household Grade	—
As Required	Cloth, Lint-Free	—
1	Brush, Nylon Bristle	—

1. Mouthpiece and mouthpiece cover: Clean and sanitize the mouthpiece and mouthpiece cover as follows:

a. Remove mouthpiece by cutting cable tie and remove mouthpiece from box bottom. Remove mouthpiece cover by cutting the cable tie that attaches it to the survival vest.

b. Clean mouthpiece and mouthpiece cover as follows:

(1) (Preferred solution) Make a 1% by weight solution of cleaning compound (Detergent, General Purpose) by adding 1/4 to 1/2 ounce (liquid) of the compound to 1 gallon of fresh water. Wash mouthpiece and cover in soap and water and rinse thoroughly with fresh water. Let parts air dry completely.

(2) (Alternate solution) Make a suitable soap solution by adding approximately 4 tablespoons of soap powder to 1 gallon of fresh water. Hardness of water may require more soap, but the solution must be sufficiently strong to readily form lather when agitated. Make sure that all soap particles are dissolved. Wash mouthpiece and cover in suds only (to eliminate residue). Rinse thoroughly with fresh water and let mouthpiece and cover air dry completely.

c. To disinfect mouthpiece: Make disinfecting solution by mixing 1/3 cup of sodium hypochlorite solution with 1 gallon of fresh water.

(1) Moisten a gauze pad with solution and squeeze to prevent dripping. Wipe mouthpiece and ensure that sanitizing solution penetrates all crevices.

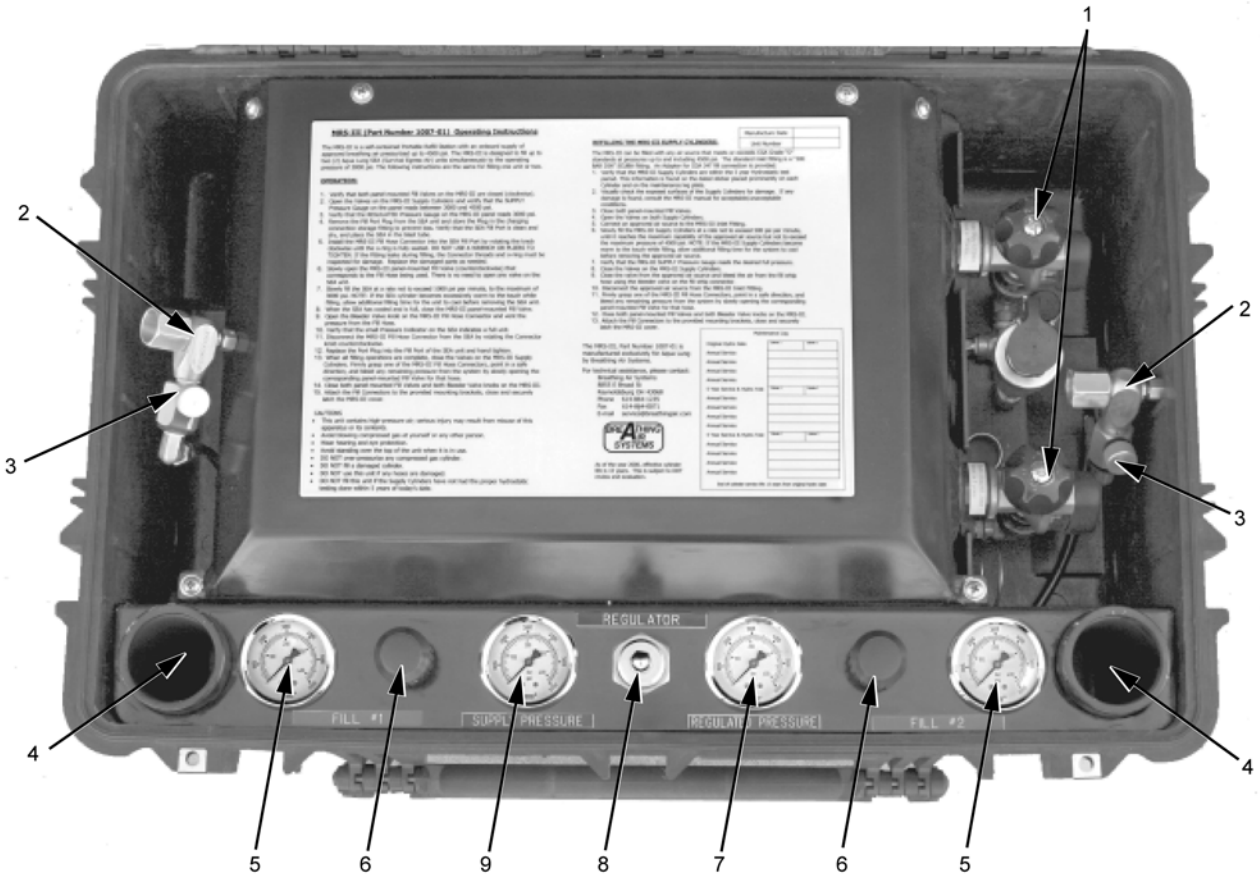

1. SUPPLY CYLINDER VALVES
2. FILL ADAPTER
3. BLEEDER VALVES
4. BOTTLE HOLDER
5. FILL GAUGE
6. FILL VALVE
7. REGULATED PRESSURE GAUGE
8. REGULATOR
9. SUPPLY PRESSURE GAUGE

Figure 16-6A. Mobile Refill System (MRS-III)

(2) Wipe mouthpiece with a clean, dry, lint-free cloth. Ensure that no lint remains.

d. Replace mouthpiece in accordance with paragraph 16-64, step 19.

e. Replace mouthpiece cover in accordance with NAVAIR 13-1-6.7-2.

2. Metal components: To clean metal components, proceed as follows:

CAUTION

Ultrasonic cleaning in excess of 15 minutes may damage chrome finish of certain parts. Be certain to use a timer, and do not leave parts unattended while cleaning. Do not clean parts which show damage to their chrome finish in an ultrasonic cleaner. Also, do not ultrasonically clean the anodized spring retainer on the SRU-40/P and SRU-40A/P (2, figure 16-8). Doing so will damage the anodized surface, and subsequently allow corrosion to occur. Allow parts to air dry when finished.

a. (Preferred method - Metal components, except the spring retainer on the SRU-40/P and SRU-40A/P): For ideal cleaning of metal components, use an ultrasonic cleaner with one-to-one solution of water and white vinegar. After soaking for 10 to 15 minutes, rinse with fresh water. Blow components clean with water pumped nitrogen or low pressure shop air through all regulator port holes (to clean particles that could have lodged in the internal passage). For heavily greased parts, degrease in a solution of warm water and liquid detergent prior to placing in ultrasonic cleaner. Allow parts to dry thoroughly when finished.

b. (Alternate method - Metal components, except the spring retainer on the SRU-40/P and SRU-40A/P): Make a one to one solution of white vinegar and water. Soak metal parts for 20 minutes. After soaking, rinse with fresh water. Blow components clean with water pumped nitrogen or low pressure shop air through all regulator port holes (to clean particles that could have lodged in the internal passage). Allow parts to dry thoroughly when finished.

c. Spring retainer on SRU-40/P and SRU-40A/P. Inspect spring retainer for any signs of oxidation or corrosion, such as pitting, or other damage to the anodized surface. If found to be in reusable condition, clean it with warm soapy water and a nylon bristle brush. Rinse thoroughly with fresh water and set it aside to air dry.

3. Plastic components: Inspect plastic components for signs of grease, dirt or other containments.

a. Clean plastic components in a solution of 4 tablespoons of soap powder to 1 gallon of fresh water. Gently clean plastic components using a nylon bristle brush. Rinse thoroughly with fresh water and set aside to air dry.

4. Hoses: To clean hoses, proceed as follows:

NOTE

If build-up of corrosion on hose fittings is severe or cannot be removed, replace hose assembly.

a. For build-up of corrosion or dirt on hose fittings, soak them in vinegar but do not allow any of the solution to enter the hose. Gently remove corrosion and dirt using a nylon brush. If corrosion can not be removed, replace hose assembly.

b. Rinse hose fittings in fresh water and allow hose to dry with cleaned ends hanging down.

5. Cylinder: To clean the cylinder, proceed as follows:

a. Lightly agitate cylinder in a solution of soapy water.

b. Rinse thoroughly with fresh water and let it air dry completely.

16-48. TESTING.

16-49. HABD LEAK TEST. The Leak Test shall be performed by qualified Aircrew Survival Equipmentman (PR). Static Leak Testing is required during the Place-In-Service and 360-Day Inspections at I-Level maintenance. Both the Static Leak Test (paragraph 16-50) and the ON/OFF Valve Test (paragraph 16-51) shall be performed at O-Level maintenance during 90-Day Inspections or as required. If a leak is detected during either the Static or the ON/OFF Valve Test, a more extensive Leak Test shall be performed. Refer to paragraph 16-52.

16-50. Static Leak Test (O-Level and I-Level Maintenance). The Static Leak Test is performed as follows:

1. Ensure HABD is fully charged (pressure gage is indicating 3000 psi).

2. Turn HABD to the ON position, record the time and set the unit aside in a secure area for a four hour static leak test.

3. At the end of the four hour period, check the pressure gage for indicated pressure. If the gage has remained at the same position (indicating 3000 psi) turn the HABD to the OFF position, and bleed the pressure from the hose utilizing the second-stage regulator purge button.

4. (O-Level) If the pressure gage has fallen below 3000 psi, the HABD shall be forwarded to Intermediate Level maintenance for more extensive leak testing (paragraph 16-52).

NOTE

Leaks detected during the Place-In-Service Static Leak Test shall be reported in accordance with OPNAVINST 4790 Series.

5. (I-Level) If the pressure gage has fallen below 3000 psi, perform a more extensive leak test. Refer to paragraph 16-52.

16-51. ON/OFF Valve Leak Test (O-Level Maintenance Only). To perform the ON/OFF Valve Leak Test, proceed as follows:

1. Turn HABD to the ON position. Ensure that the pressure gage indicates a full charge (3000 psi).

2. Depress and release the second-stage purge button. An audible hiss should be heard which should stop immediately once the button is released. If the vented air does not stop immediately, depress the purge 2 or 3 more times. If the vented air stops, proceed with the test. If it does not stop, or if no audible hiss is heard when the purge button is depressed, forward the unit to the Intermediate Level maintenance for repair.

3. Turn HABD to the OFF position. Depress the purge button until all air flow stops and no audible hiss is heard.

4. Allow the HABD to sit for 15 minutes then depress the purge button. Any air escaping (an audible hiss is heard) indicates a leaking ON/OFF valve. Forward the unit to Intermediate Level maintenance for further testing and repair. If the HABD passes both the Static and the ON/OFF Valve Leak Tests, top-off the unit in accordance with paragraph 16-41.

16-52. HABD IMMERSION LEAK TEST. The Immersion Leak Test shall be performed on the HABD only if the source of the leak could not be found during the static or ON/OFF leak tests. The water immersion test shall only be performed at Intermediate Level maintenance.

CAUTION

Do not submerge unit without pressure on the entire system. Moisture may enter the valves and the cylinder, which will require the system to be disassembled and purged.

1. Turn the HABD ON/OFF valve to the ON position. After ensuring that the HABD is pressurized and the unit's pressure gage is in the green zone (2700 to 3000 psi), listen for any obvious signs of leakage from the system.

2. If leakage cannot be heard, or if the source of leakage detected is not obvious, immerse the entire system in fresh water. Examine closely to check for any signs of leakage from the second-stage regulator, hose, pressure gage, safety disc, first-stage regulator, or cylinder neck.

3. Note the source of any leakage found and refer to table 16-4 and 16-5 to determine the possible cause.

Table 16-4. Troubleshooting Guide, First-Stage Regulator (Figure 16-7)

Trouble	Possible Cause	Remedy
System will not remain depressurized after valve is shut and second-stage is purged.	1. Indicator ring (12) set incorrectly. 2. Valve body (22) is damaged or worn. 3. Crown sealing surface of cylinder adapter (26) orifice is damaged.	1. Loosen set screw (11) and reset indicator ring. 2. Replace First-Stage Regulator Subassembly. 3. Replace First-Stage Regulator Subassembly.
High or unstable intermediate pressure.	1. First-stage improperly adjusted. 2. HP seat (15) damaged or worn. 3. Spring block O-ring (17) damaged or worn. 4. Spring block (19) damaged. 5. Crown sealing surface of first-stage body (10) damaged. 6. Spring block springs (16 and 20) weakened or damaged.	1. Readjust adjustment screw (1). 2. Install service kit 1028-81. 3. Install service kit 1028-81. 4. Replace First-Stage Regulator Subassembly. 5. Replace First-Stage Regulator Subassembly. 6. Replace First-Stage Regulator Subassembly.
Low intermediate pressure.	1. Adjustment screw (1) incorrectly adjusted. 2. Main spring (4) weakened or damaged. 3. Spring retainer (2) loose.	1. Readjust adjustment screw per final adjustment and testing instructions (paragraph 16-65). 2. Replace First-Stage Regulator Subassembly. 3. Tighten to 25 ±2 ft-lb.
External air leakage (Immersion Test).	1. Spring retainer (2) loose. 2 Diaphragm (7) worn or damaged. 3. Diaphragm seating surface inside first-stage body (10) damaged.	1. Tighten to 25 ±2 ft-lb. 2. Install service kit 1028-81. 3. Replace First-Stage Regulator Subassembly.

Table 16-5. Troubleshooting Guide Second-Stage Regulator (Figure 16-8)

Trouble	Possible Cause	Remedy
Leakage or free flow from second-stage.	1. High first-stage intermediate pressure. (Should be 140 ±5 psi)	1. Refer to first-stage Troubleshooting Guide (table 16-4).
	2. LP seat (15) damaged or worn.	2. Install service kit 1028-82.
	3. Adjustment screw (11) incorrectly adjusted.	3. Readjust adjustment screw per final adjustment and testing instructions (paragraph 16-65).
	4. Lever (5) set too high.	4. Readjust crown (25) per final adjustment and testing instructions (paragraph 16-65).
	5. Lever (5) bent.	5. Replace Second-Stage Regulator Assembly.
	6. Crown (25) sealing surface damaged or worn.	6. Replace Second-Stage Regulator Assembly.
	7. Poppet (14) damaged or worn.	7. Replace Second-Stage Regulator Assembly.
	8. Poppet spring (13) damaged.	8. Replace Second-Stage Regulator Assembly.
Low Purge or excessive work of breathing (full cylinder).	1. Low intermediate pressure. (Should be 140 ±5 psi)	1. Refer to first-stage Troubleshooting Guide (table 16-4).
	2. Poppet spring adjustment screw (11) incorrectly adjusted.	2. Readjust adjustment screw per final adjustment and testing instructions (paragraph 16-65).
	3. Lever (5) set too low.	3. Readjust crown (25) per final adjustment and testing instructions (paragraph 16-65).
	4. Lever (5) bent.	4. Replace Second-Stage Regulator Assembly.
	5. Poppet spring (13) incorrectly installed.	5. Disassemble second-stage and reinstall poppet spring.
	6. Cylinder valve not opening completely.	6. Refer to first-stage Troubleshooting Guide (table 16-4).
	7. Intermediate pressure hose clogged or obstructed.	7. Replace hose assembly.

Table 16-5. Troubleshooting Guide Second-Stage Regulator (Figure 16-8) (Cont)

Trouble	Possible Cause	Remedy
Water entering second stage.	1. Hole in mouthpiece (19).	1. Replace mouthpiece.
	2. Demand diaphragm (4).	2. Replace Second-Stage Regulator Assembly.
	3. Exhaust valve (7) damaged.	3. Install service kit 1028-82.
	4. Exhaust valve improperly seated.	4. If exhaust valve is found folded or tucked, lift folded or tucked edge of exhaust valve until it is lying flat and covering entire exhaust port.
	5. Adjustment vane switch O-ring (21) dirty, damaged, or worn.	5. Install service kit 1028-82.
	6. Diaphragm improperly seated between box bottom (22) and purge cover (3).	6. Disassemble and properly reassemble (check for distortion).
	7. Box bottom (22) damaged.	7. Replace Second-Stage Regulator Assembly.
	8. Valve body O-ring (24) damaged.	8. Install service kit 1028-82.
	9. End cap O-ring (10) damaged.	9. Install service kit 1028-82.

16-53. DISASSEMBLY.

16-54. The following disassembly procedures shall be used for the complete disassembly of the HABD as authorized for Intermediate Level maintenance. For replacement of indicator pin only, refer to paragraph 16-57 and figure 16-7.

16-55. FIRST-STAGE REGULATOR DISASSEMBLY. The First-Stage Regulator disassembly procedure includes a complete breakdown of the First-Stage Regulator Assembly. DO NOT attempt to reuse mandatory replacement parts under any circumstances. Refer to figure 16-7 for disassembly and identification of parts.

Support Equipment Required

Quantity	Description	Reference Number
1	Brass O-ring Removal Tool	9440-22 NIIN 01-452-7267
1	Vise Mounting Tool	M1003-95 NIIN 01-452-7246
1	Compressed Air Refill Assembly, CQU-10/U	1586AS401-1
1	Cloth Strap Wrench	NIIN 00-242-3249
1	Magnifying Glass	—
1	Snap Ring Pliers	—

WARNING

Failure to completely empty the HABD of air prior to performing any disassembly may cause the sudden separation of components or ejection of parts, which may result in serious personal injury.

CAUTION

Use care when removing O-rings to prevent damage to the sealing surface. Even a small scratch across an O-ring sealing surface could result in leakage. Once an O-ring sealing surface has been damaged, that portion of the HABD is rendered unserviceable and the part, subassembly or assembly must be replaced. Refer to Illustrated Parts Breakdown for requisitioning of parts, subassemblies, and assemblies. DO NOT use a dental pick or any other steel instrument.

NOTE

Use only a common plastic or brass O-ring removal tool when removing O-rings.

For all index numbers listed in the following text, refer to figure 16-7.

1. Turn HABD ON/OFF valve to ON. Depress second-stage regulator purge button until the unit is empty and there is no air flow.

2. Apply 11/16-inch open-end wrench to the dial gage (31). Turn the dial gage counter-clockwise and remove it from the First-Stage Regulator Assembly. Remove and discard the O-ring (32), and set the dial gage (31) aside.

3. Apply a 1/2-inch open-end wrench to the safety plug (30), and turn counter-clockwise two to three 360° turns to loosen but do not remove.

4. Close the HABD ON/OFF valve. Dislodge the burst disc by applying a short burst of air from the CQU-10/U or shop air into the pressure gage port. Remove the safety plug (30) to allow the burst disc (29) and gasket (28) to fall out of the First-Stage Regulator body. Discard these three items and do not reuse.

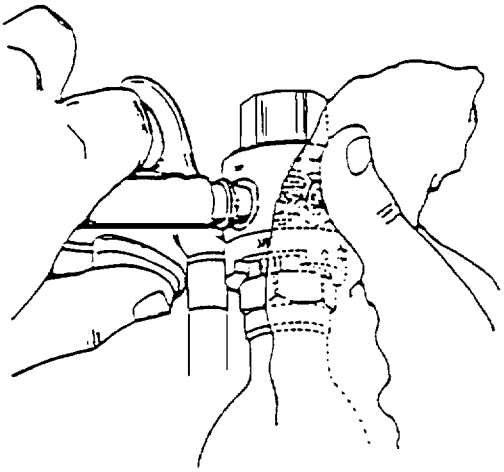

16055004

Step 4 - Para 16-55

5. Apply external snap ring pliers to the hose snap ring (36) which holds the hose assembly in place. Spread the snap ring and remove from the swivel fitting. Discard the snap ring and do not attempt to reuse.

6. Firmly grasp the end of the hose assembly and pull straight off to remove from the swivel fitting (14).

7. Set the hose assembly and Second-Stage Regulator Assembly aside.

8. (SRU-40/P only) Apply a 5/16-inch blade screwdriver to the slot of the swivel fitting (14), and turn counter-clockwise and remove. Remove and discard the O-ring (13) from the threaded stem, and both O-rings (34) from the swivel fitting.

9. (SRU-40A/P and SRU-40B/P only) Apply a 5/16-inch hex key to the hex slot in the swivel fitting (14), and turn counter-clockwise to remove. Remove and discard the O-ring (13) from the threaded stem, and both O-rings (34) from the swivel fitting.

10. Apply a 1/16-inch hex key to the set screw (11) which holds the ON/OFF indicator ring (12) in place. Turn the set screw counter-clockwise and remove.

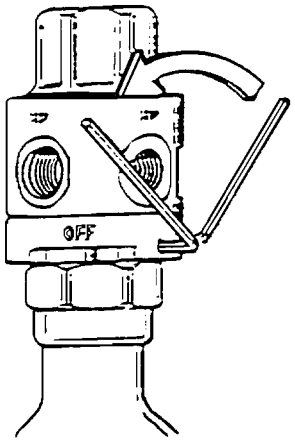

16055010

Step 10 - Para 16-55

11. While holding the cylinder (33) securely, turn the First-Stage Regulator Assembly counter-clockwise by hand to loosen and remove the regulator from the cylinder adapter (26) and cylinder (33).

12. While holding cylinder (33) securely with a strap wrench or in a padded vise, apply a 1 1/8-inch open-end wrench to cylinder adapter (26) and turn counter-clockwise and remove cylinder adapter (26) from cylinder (33). Remove and discard the O-ring (27).

13. Gently pull the ON/OFF indicator ring (12) off the threaded stem of the valve assembly and set aside.

14. Install the vise mounting tool, hand tight, into the larger HP port of the first-stage regulator body.

15. Secure the vise mounting tool in a vise so that the low pressure side of the First-Stage Regulator Assembly faces straight up.

16. Apply a 5/16-inch blade screwdriver to the first-stage adjustment screw (1) and turn counterclockwise to remove it from the spring retainer (2) being careful to prevent the sudden ejection of internal parts beneath the adjustment screw. Set the first-stage adjustment screw aside.

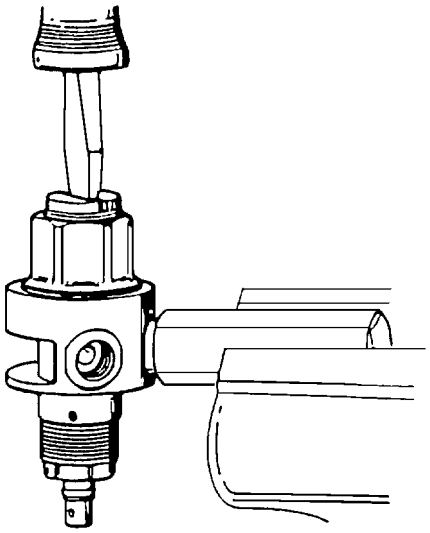

16055015

Step 15 and 16 - Para 16-55

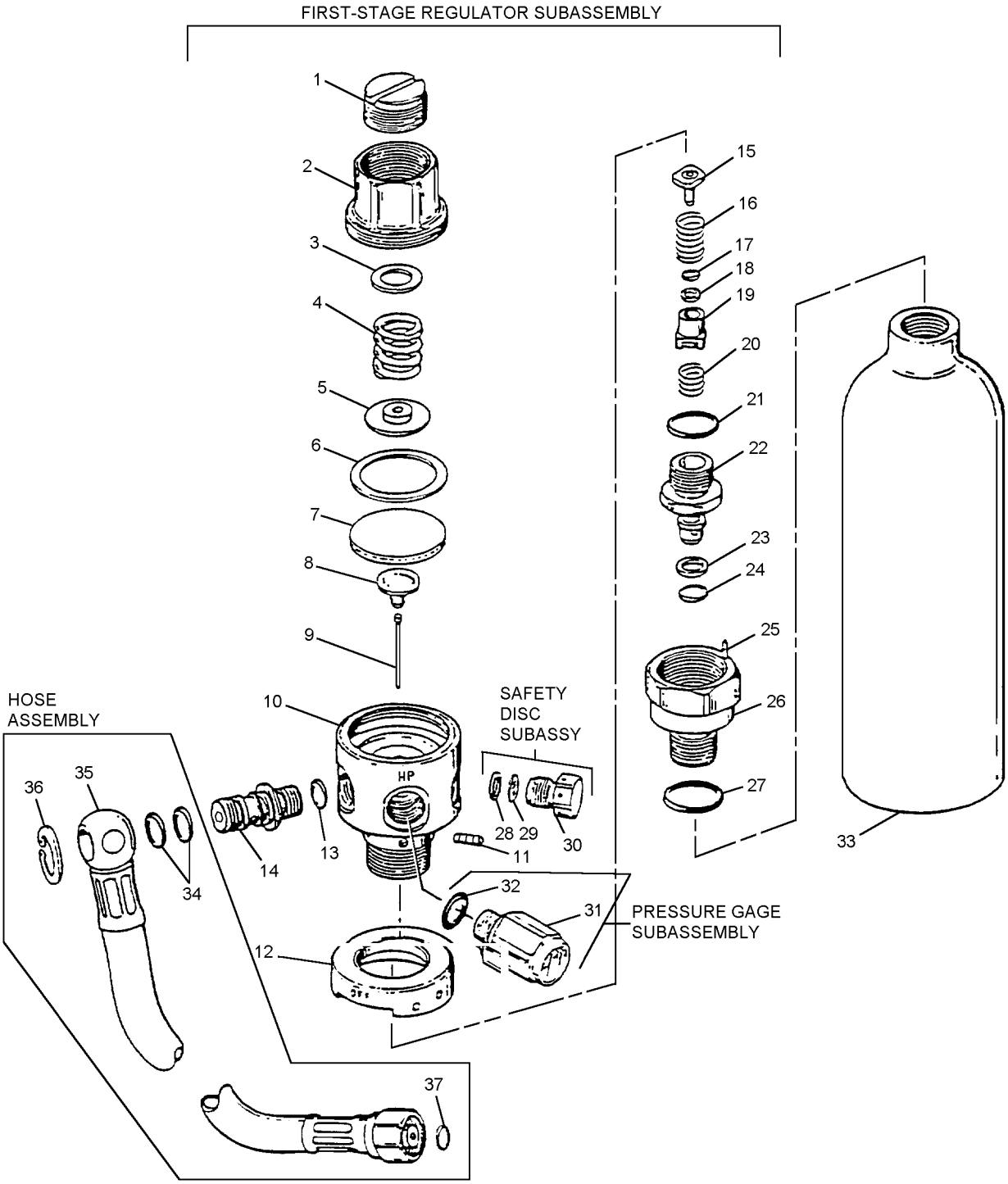

Figure 16-7. First-Stage Regulator Assembly and Hose Assembly (Sheet 1 of 2)

‘

FIRST-STAGE REGULATOR SUBASSEMBLY

1 FIRST-STAGE ADJUSTMENT SCREW
2 SPRING RETAINER
3 WASHER, MAIN SPRING
4 MAIN SPRING
5 SPRING PAD
6 THRUST WASHER*
7 DIAPHRAGM*
8 PIN SUPPORT
9 PIN
10 REGULATOR BODY, FIRST-STAGE
11 SET SCREW
12 ON/OFF INDICATOR RING
13 O-RING*
14 SWIVEL FITTING
15 HP SEAT*
16 SPRING, SEAT
17 O-RING*
18 BACK-UP RING*
19 HP SPRING BLOCK
20 SPRING
21 O-RING*
22 VALVE BODY
23 BACK-UP RING*
24 O-RING*
25 INDICATOR PIN
26 CYLINDER ADAPTER
27 O-RING*

SAFETY DISC SUBASSEMBLY*

28 GASKET
29 BURST DISC
30 SAFETY PLUG

PRESSURE GAGE SUBASSEMBLY

31 DIAL GAGE
32 O-RING*

33 CYLINDER

HOSE ASSEMBLY

34 O-RING*
35 HOSE
36 HOSE SNAP RING*
37 O-RING

*SERVICING REPLACEMENT PARTS (KIT FOR FIRST-STAGE REGULATOR ASSEMBLY, P/N 1028-81)

Figure 16-7. First-Stage Regulator Assembly and Hose Assembly (Sheet 2)

17. Lift out the washer (3) and main spring (4). Examine the main spring with the use of a magnifier, checking closely for any signs of pitting, rusting, or other corrosion which permeates the surface of the metal. If this type of corrosion is found, replace First-Stage Regulator Subassembly.

18. Apply a 1-inch open-end wrench to the spring retainer (2) and turn the spring retainer counter-clockwise and remove it from the first-stage body (10). Inspect the spring retainer for any signs of oxidation or corrosion, such as pitting, or other damage to the surface. If found to be in reusable condition, set the spring retainer aside to be cleaned in accordance with paragraph 16-46.

19. Lift the spring pad (5) and thrust washer (6) out of the First-Stage Regulator. Discard the thrust washer and set the spring pad aside.

CAUTION

DO NOT attempt to pry the diaphragm out of the First-Stage Regulator Subassembly with a metal instrument. Doing so will permanently damage the seating shoulder inside the First-Stage Regulator which will require the replacement of the First-Stage Regulator Subassembly.

20. Using the CQU-10/U or shop air, direct a short burst of low pressure air through the open IP port (where hose attaches) to dislodge the diaphragm (7) from the First-Stage Regulator body.

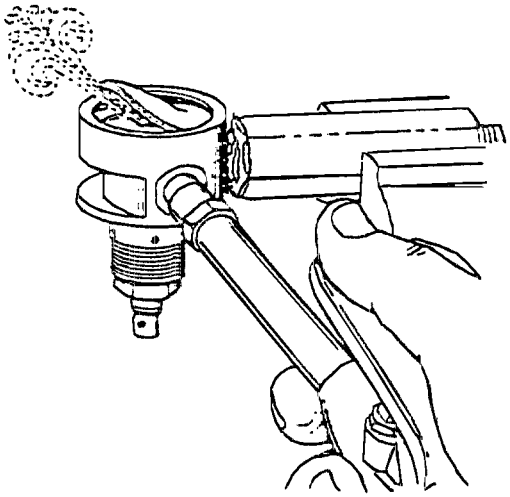

16055020

Step 20 - Para 16-55

21. Loosen the vise to remove the vise-mounting tool and First-Stage Regulator Subassembly. Turn the First-Stage Regulator Subassembly over to allow the pin support (8) and pin (9) to drop out onto the bench, and set these items aside.

22. Secure the vise-mounting tool in the vise once again, so that the high pressure valve body (22) faces straight up.

23. Apply a 3/4-inch open-end wrench over the flat hex surface of the valve body (22), just above the threaded portion of the First-Stage Regulator body (10). Slowly turn the wrench counter-clockwise and remove the valve body from the First-Stage Regulator body, being careful to prevent the sudden ejection of internal parts beneath the valve body which are under spring pressure.

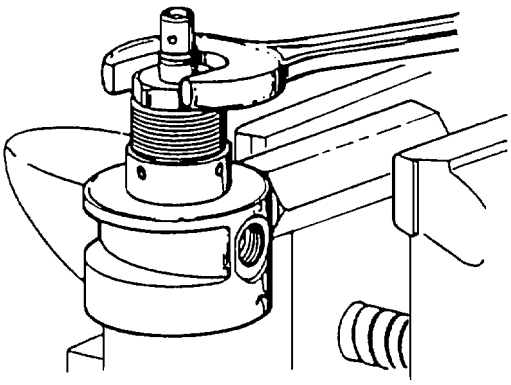

16055022

Step 22 and 23 - Para 16-55

24. Using an O-ring tool, remove the O-ring (21) from the male threads, and the O-ring (24) and backup ring (23) from the stem of the valve body. Discard these items.

25. Closely examine the acrylic seat material inside the end of the valve body stem to check for any excessive wear or damage. If the seat material exhibits any signs of excessive wear or damage, or if the valve exhibited leakage during the initial inspection, replace the First-Stage Regulator Subassembly.

26. Loosen the vise to remove the vise-mounting tool and First-Stage Regulator. Turn the First-Stage Regulator Subassembly over to allow the spring (16), spring block (19), seat spring (20), and high pressure seat (15) to drop out. Discard the high pressure seat.

27. Closely examine both springs to check for any signs of corrosion that may have resulted from moisture entering the First-Stage Regulator Subassembly. If corrosion is found, replace the First-Stage Regulator Subassembly.

28. Carefully remove the O-ring (17) and backup ring (18) from inside the balancing chamber of the HP spring block (19), using an O-ring tool to prevent any damage to the internal sealing surface of the spring block.

CAUTION

The slightest scratch or scar across the sealing surface inside the spring block will cause leakage, and prevent the regulator from achieving a stable lock-up of intermediate pressure.

29. With the use of a magnifier, closely examine the sealing surface inside the spring block to check for any signs of permanent corrosion, scoring, or other damage. If found, replace the First-Stage Regulator Subassembly.

30. With the use of a magnifier, closely inspect the sealing surface of the orifice crown inside the first-stage regulator body, checking to ensure that it is free of any signs of damage or corrosion. If any damage is found, replace First-Stage Regulator Subassembly.

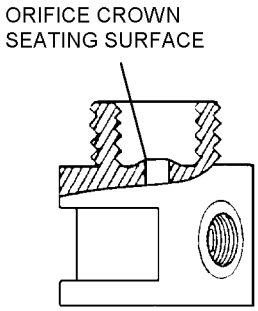

16055030

Step 30 - Para 16-55

16-56. SECOND-STAGE REGULATOR DISASSEMBLY. The Second-Stage Regulator disassembly procedure includes a complete breakdown of the Second-Stage Regulator Assembly. DO NOT attempt to reuse mandatory replacement parts under any circumstances. Refer to figure 16-8 for disassembly and identification of parts.

Materials Required

Quantity	Description	Reference Number
1	Brass O-ring Removal Tool	9440-22 NIIN 01-452-7267
1	Retaining Ring Wrench	M1001-88 NIIN 01-452-7269
1	Magnifying Glass	—
1	Wooden Dowel	NIIN 00-240-0677
1	5/32-inch Hex Key	—
1	Wire Cutter	—

NOTE

Use only a common plastic or brass O-ring removal tool when removing O-rings.

Unless otherwise indicated, for all index numbers listed in the following text, refer to figure 16-8.

1. Using an 11/16-inch and an 13/16-inch open-end wrench, remove hose assembly (35, figure 16-7) from Second-Stage Regulator Assembly. Remove O-ring (37, figure 16-7) and discard. Set hose assembly and First-Stage Regulator (if attached) aside.

2. Turn the hard purge cover (1) counter-clockwise by hand and remove it from the Second-Stage Regulator Assembly. Inspect threads for damage. If damaged treads are found, replace Second-Stage Regulator Assembly.

3. Insert both pins of the retaining ring wrench securely into any two opposite slots of the retaining ring (2). Turn the wrench counter-clockwise to remove the retaining ring.

4. Remove the retaining ring (2), purge cover (3) and demand diaphragm (4). Inspect these items closely to ensure that they are free of any tears, corrosion, or other damage. If damage or deterioration is found, replace Second-Stage Regulator Assembly.

5. Apply a 13/16-inch open-end wrench to the hex nut (27) and turn it counter-clockwise to remove.

6. Apply 5/32-inch hex key to the cap plug (9) and turn it counter-clockwise and remove. Remove O-ring (10) and discard.

7. Apply a 1/8-inch blade screwdriver to the slotted head of the plastic adjustment screw (11) and turn it counter-clockwise and remove. Remove the small washer (12) from the stem of the adjustment screw. Inspect these items for any signs of damage. If damage is found, replace Second-Stage Regulator Assembly.

8. Remove the poppet spring (13), and examine it with the use of a magnifier. Check closely for any signs of pitting, rusting, or other corrosion which permeates the surface of the metal. If damage or corrosion is found, replace Second-Stage Regulator Assembly.

9. Before proceeding, stand the lever (5) up and out of the box bottom, and ensure that it is kept standing while performing the following step.

CAUTION

Failure to stand the lever up before attempting to move the valve body may result in permanent damage to the box bottom, the lever, or both.

10. While holding the box bottom secure, push the male threaded inlet side of the valve body (23) into the box bottom until the head of the lever retaining pin (6) is visible. Turn the box bottom over to drop out the pin, and then remove the lever. You may have to move the lever back and forth lightly for the pin to drop out. Inspect the lever to check for any signs of bending, distortion, or excessive wear of the plating. If any of these conditions are found, replace the Second-Stage Regulator Assembly.

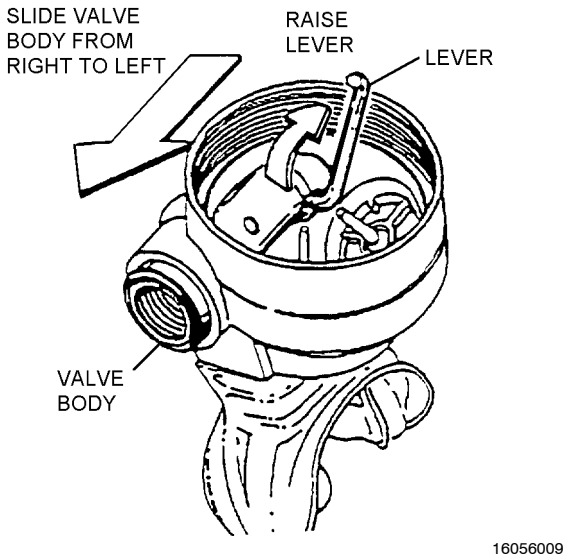

Step 9 and 10 - Para 16-56

11. Press the valve body on the square end until it can be pulled out and removed from the opposite side of the box bottom. Tilt the female threaded end of the valve body down to drop out the poppet (14) that contains the LP seat (15). Remove and discard the valve body O-ring (24), and set the valve body aside.

12. Lightly stick the center of the LP seat (15) with a plastic or brass O-ring removal tool and lift the seat out, being very careful to avoid damaging the poppet. Discard the seat, and inspect the poppet for any nicks, scratches, or wear of the lever groove. The hole beneath the LP seat cavity should be clear and free of any obstructions. If the poppet is damaged, replace the Second-Stage Regulator Assembly.

NOTE

Because the crown is O-ring sealed, it will not freely exit the valve body after it has been unscrewed. The following step must be performed correctly in order to remove the crown without damaging its delicate sealing surface.

13. While holding the valve body (23) secure, apply a medium blade screwdriver to the slotted head of the adjustable crown (25), and turn the crown counterclockwise to unscrew until it stops backing out of the valve body.

14. When the crown has been unscrewed as far as it will go, carefully insert a non-metallic probe (a wooden dowel will suffice) through the opposite end of the valve body and gently press the crown out. Remove and discard the O-ring (26).

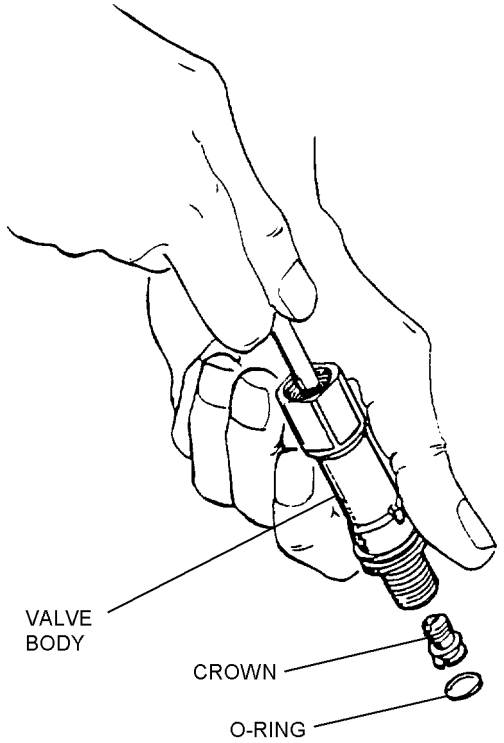

16056014

Step 14 - Para 16-56

15. Closely examine the crown with the use of a magnifier, checking for any scoring, nicks or other damage to the sealing surface. If damage is found, replace the Second-Stage Regulator Assembly. If crown is in reusable condition, set it aside on a soft surface to prevent damage to the sealing surface.

16. Using wire cutters, carefully snip the plastic mouthpiece cable tie (17) and remove the mouthpiece (19) from the box bottom. Inspect the mouthpiece to ensure it is free of any tears or cuts that may cause leakage of water into the second-stage regulator or other discomfort. Discard or set aside to be reused, depending on its condition.

17. Stand the box bottom (22) upside down on a padded surface, so that the vane adjustment switch (20) faces down, and the exhaust side of the box bottom face forward.

NOTE

To prevent the snap ring (16) from becoming lost in the process of removal, place a clean rag over the outlet boss of the box bottom before performing the following step.

18. Check to ensure that the ends of the snap ring (16) are facing straight towards the open side of the box bottom (22). (Rotate the snap ring, if necessary, to achieve this orientation.) While holding a 1/8-inch blade screwdriver stationary against one side to prevent the snap ring from rotating, apply a medium screwdriver against the other side to press the snap ring straight off the stem of the vane adjustment switch. Set snap ring aside.

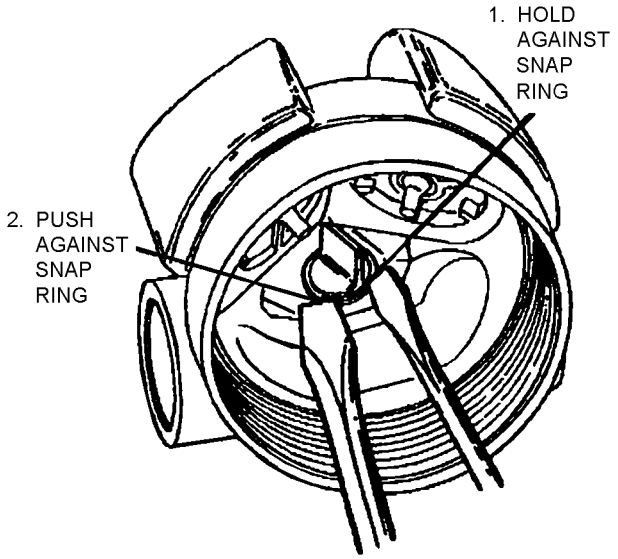

16056018

Step 18 - Para 16-56

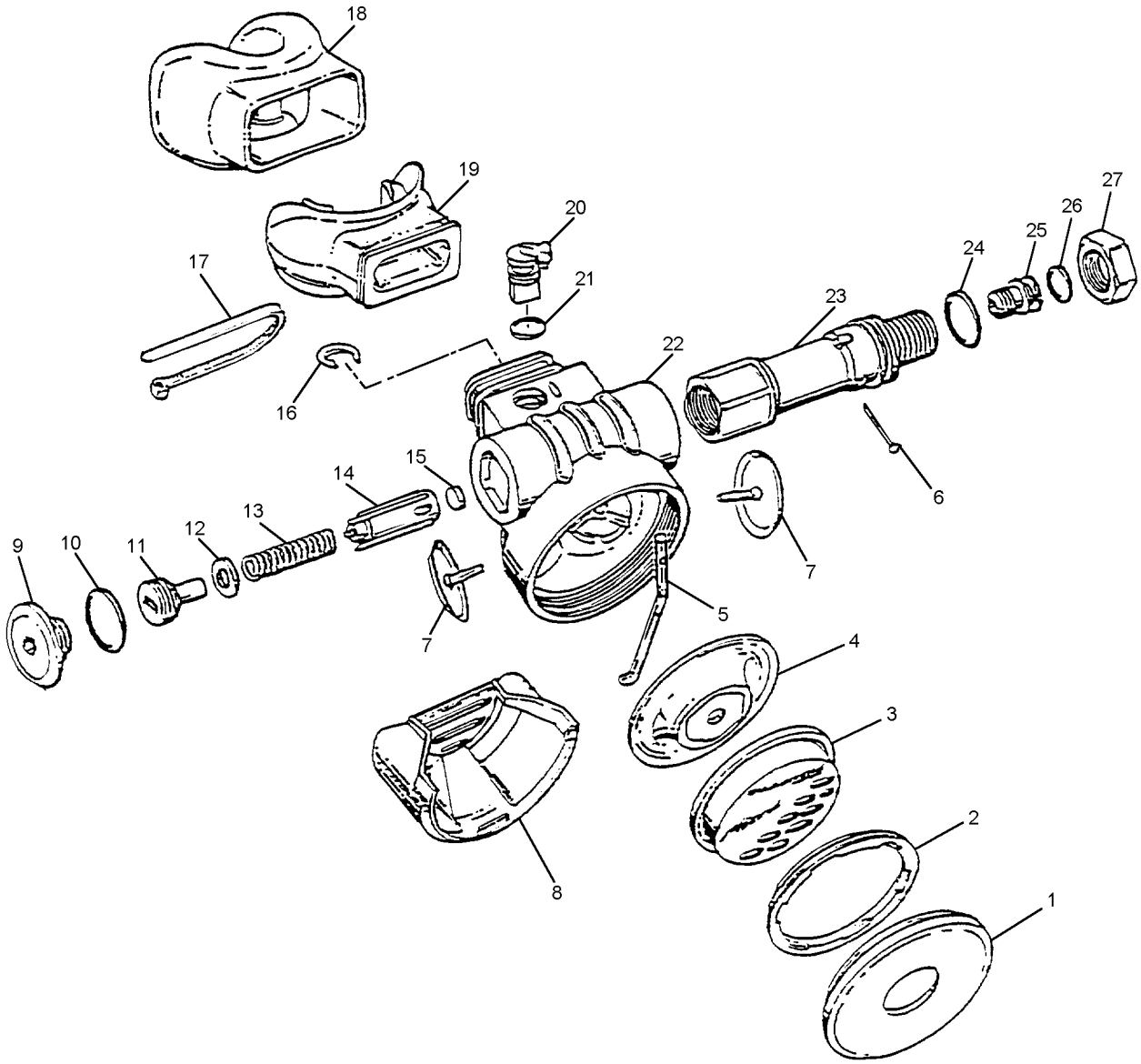

01600801

Figure 16-8. Second-Stage Regulator Assembly (Sheet 1 of 2)

1 HARD PURGE COVER
2 RETAINING RING
3 PURGE COVER
4 DEMAND DIAPHRAGM
5 PURGE LEVER
6 LEVER PIN
7 EXHAUST VALVE*
8 EXHAUST COVER, BLACK
9 CAP PLUG,
10 O-RING*
11 ADJUSTMENT SCREW
12 WASHER
13 SPRING
14 POPPET
15 LP SEAT*
16 SNAP RING
17 CABLE TIE, BLACK*
18 MOUTHPIECE COVER
19 MOUTHPIECE
20 VANE ADJUSTMENT SWITCH
21 O-RING*
22 BOX BOTTOM
23 VALVE BODY
24 O-RING*
25 CROWN
26 O-RING*
27 HEX NUT

*SERVICING REPLACEMENT PARTS (KIT FOR SECOND-STAGE REGULATOR ASSEMBLY, P/N 1028-82)

Figure 16-8. Second-Stage Regulator Assembly (Sheet 2)

19. Pull the vane adjustment switch straight up and out of the outlet boss of the box bottom. Remove and discard the O-ring (21), and set the vane adjustment switch aside.

20. Place a medium blade screwdriver approximately 1/2 inch inside the opening of the exhaust cover and press the exhaust cover between thumb and screwdriver. Sharply pull the exhaust cover out and away from the box bottom until that corner of the exhaust cover is disengaged.

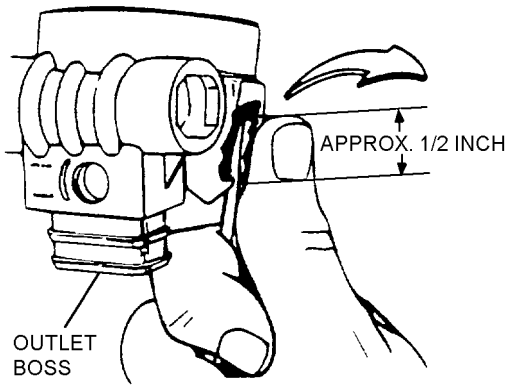

16056020

Step 20 - Para 16-56

21. Turn the box bottom and press the disengaged side of the exhaust cover up from below, rotating it over the box bottom until the opposite side disengages.

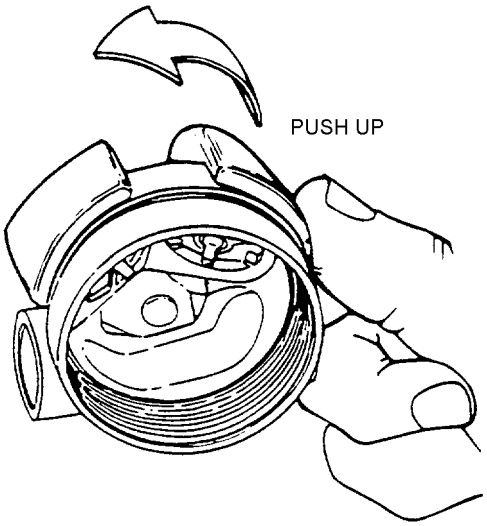

16056021

Step 21 - Para 16-56

22. Remove and discard the two exhaust valve diaphragms (7).

16-57. REPLACEMENT OF INDICATOR PIN. It is not necessary to completely disassemble the First-Stage Regulator in order to replace the indicator pin in the cylinder adapter.

Materials Required

Quantity	Description	Reference Number
As Required	Christo-Lube (Note 1)	MCG-111 (2 oz Tube, NIIN 01-441-9016)
As Required	Anti-seize Lubricant, One Pound Can	MIL-A-907 NIIN 00-251-3980
As Required	Torque Seal (sealant)	F-900
1	Brass O-ring Removal Tool	9440-22 NIIN 01-452-7267
1	Indicator Pin	1006-09

Notes: 1. Christo-Lube may be open purchased from:
Lubrication Technology Inc.
310 Morton St.
Jackson, OH 45640
Phone - 740-286-2644

Support Equipment Required

Quantity	Description	Reference Number
1	Cloth Strap Wrench	NIIN 00-241-3249
1	1/16-in Hex Key	—
As Required	Cloth, Lint-Free	—
1	Wooden Mallet	—

16-58. Removal.

WARNING

Failure to completely empty the HABD of air prior to any disassembly may cause the sudden separation of components or ejection of parts which may result in serious personal injury.

NOTE

Use only a common plastic or brass O-ring removal tool when removing O-rings.

Unless otherwise indicated, for all index numbers listed in the following text, refer to figure 16-7.

1. Apply a 1/16-inch hex key to the set screw (11) which holds the ON/OFF indicator ring (12) in place. Turn the set screw counter-clockwise to loosen until the indicator ring can be turned independently of the First-Stage Regulator Subassembly. Remove set screw (11) and set aside.

2. While holding the cylinder (33) securely, turn the First-Stage Regulator Subassembly counter-clockwise by hand and remove First-Stage Regulator (10) from cylinder adapter (26) and cylinder (33).

3. Carefully remove indicator pin (25) from cylinder adapter (26) with the use of pliers.

16-59. Installation.

1. Install replacement indicator pin (25) into cylinder adapter (26) by inserting it into hole and gently tapping it in with a wooden mallet.

2. Remove old anti-seize lubricant from the male threads of the First-Stage Regulator and from the female threads of the cylinder adapter with a clean lint-free cloth.

3. Re-apply food grade anti-seize lubricant generously to the male threads of the First-Stage Regulator and to the female threads of the cylinder adapter.

4. Place the flat side of the ON/OFF indicator ring (12) over the male threads of First-Stage Regulator (10) so that the flat side of the indicator ring is flush against the First-Stage Regulator body and the OFF aperture is facing down.

5. While holding the First-Stage Regulator and indicator ring together, mate the First-Stage Regulator into the cylinder adapter. While holding the cylinder securely, turn the First-Stage Regulator clockwise by hand, and stop when resistance is felt.

6. Rotate the ON/OFF indicator ring to align the set screw hole with the female threaded hole in the First-Stage Regulator body that is to the immediate right of the indicator pin.

WARNING

Failure to check security of the ON/OFF indicator ring set screw may cause cylinder and First-Stage Regulator Subassembly to separate resulting in the cylinder becoming a projectile, which could cause serious injury or death.

7. Mate the set screw (11) into the set screw hole of the indicator ring and into the hole of the regulator body using a 1/16-inch hex key. Tighten the set screw clockwise until snug. Indicator ring should not move. Apply torque sealant to set screw.

8. If necessary, complete reassembly of First-Stage Regulator by proceeding to paragraph 16-63.

16-60. ASSEMBLY.

16-61. The HABD First-Stage and Second-Stage Regulator Assemblies are reassembled as described in the following paragraphs.

CAUTION

Discard all replaced parts. Do not reuse.

NOTE

For assembly of the HABD, utilize figures 16-7 and 16-8.

16-62. O-RING LUBRICATION AND DRESSING. All O-rings shall be lubricated with a visible white coating of Christo-lube.

CAUTION

Do not apply any form of silicone lubricant to silicone rubber parts, as this will cause them to deteriorate prematurely.

16-63. FIRST-STAGE REGULATOR ASSEMBLY. Before reassembling the HABD, it is important to inspect all parts both old and new, to ensure that every part is clean and free of any dust, corrosion or blemishes. Before dressing O-rings with Christo-lube, check each O-ring to ensure it is clean, supple, and free of any blemish. Lubricate all O-rings in accordance with paragraph 16-62.

Materials Required

Quantity	Description	Reference Number
As Required	Christo-Lube (Note 1)	MCG-111 (2 oz. Tube, NIIN 01-441-9016)
As Required	Anti-seize Lubricant, One Pound Can	MIL-A-907 NIIN 00-251-3980
1	First-Stage Regulator Service Kit	1028-81

Materials Required (Cont)

Quantity	Description	Reference Number
As Required	Torque Seal (sealant)	F-900

Notes: 1. Christo-Lube may be open purchased from:
Lubrication Technology Inc.
310 Morton St.
Jackson, OH 45640
Phone - 740-286-2644

Support Equipment Required

Quantity	Description	Reference Number
1	Cloth Strap Wrench	—
1	3/4-in Hex Socket	—
1	1-in Hex Socket	—
1	Torque Wrench (micrometer) 20 - 100 ft-lb	—
1	Torque Wrench (micrometer) 30 - 150 in-lb	—
1	Vise Mounting Tool	M1003-95 NIIN 01-452-7246
1	Snap Ring Pliers	—
1	Wooden Dowel	NIIN 00-240-0677
1	1 1/8-in Hex Socket	—
1	1/2-in Hex Socket	—
1	5/32-in Allen Key Socket	
1	1/16-in Hex Key	—
1	Inspection Light	—

CAUTION

Do not tighten parts beyond their torque specification when reassembling. Some parts are made of either marine brass or plastic and can be permanently damaged by undue stress.

NOTE

Unless otherwise indicated, for all index numbers listed in the following text, refer to figure 16-7.

1. Install lubricated O-ring (32) onto the dial gage (31), at the base of the male threads. Set the pressure gage subassembly aside.

2. Install the backup ring (18), and then lubricated O-ring (17), into the chamber of the spring block (19). Set this assembly aside.

3. Apply a small amount of Christo-lube to the female threads of the high pressure side of the First-Stage Regulator body. While holding the high pressure seat (15) by its stem, gently lower it into the inlet cavity of the First-Stage Regulator body (10) until it rests flat on top of the orifice crown.

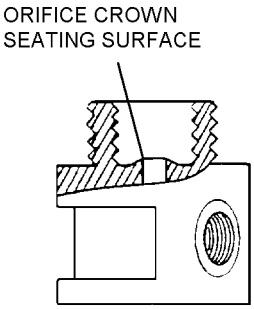

16063003

Step 3 - Para 16-63

4. Place the high pressure seat spring (16) directly over the stem of the high pressure seat.

5. Insert the open end of the spring block (19) into the center of the high pressure seat spring, and then place the smaller spring (20) directly over the large end of the spring block.

6. Place valve body (22) onto table with threaded position down. Install lubricated backup ring (23) (concave side facing up to face O-ring), followed by lubricated O-ring (24) onto the stem of the valve body. Install lubricated O-ring (21) onto the opposite side of the valve body, at the base of the male threads.

7. Apply a small amount of Christo-lube to the threads of the valve body. Mate the male threaded end of the valve body into the center of the regulator body (10) and press straight down while turning clockwise to engage the threads. Turn until hand-tight.

8. While holding the first-stage with the low pressure side facing up, carefully insert the small end of the pin (9) into the center hole of the body until only the larger end protrudes out.

9. Install the pin support (8) over the large end of the pin. Gently push down to ensure a smooth, spring-loaded movement.

NOTE

Diaphragm (7) and thrust washer (6) are packaged together as a single unit.

It does not matter which direction the diaphragm is placed inside the body.

10. Lay the diaphragm (7) inside the body, and using the thumb, gently push and work it down into place until it is evenly seated at the base of the female threads.

11. Lay the thrust washer (6) over the diaphragm, and using the thumb, gently push and work it down into place until it is evenly seated.

12. Apply a small amount of Christo-lube to the threads of the spring retainer (2). Lay the spring pad (5) in the center of the diaphragm with the tab facing up, and thread the spring retainer (2) clockwise into the body until hand tight.

13. Install vise mounting tool into the larger HP port of the First-Stage Regulator body.

14. Secure the vise mounting tool in a vise, with the valve body (22) facing straight up. Apply a torque wrench with a 3/4-inch hex socket and tighten the valve body to a torque measurement of 60 ±3 in-lb.

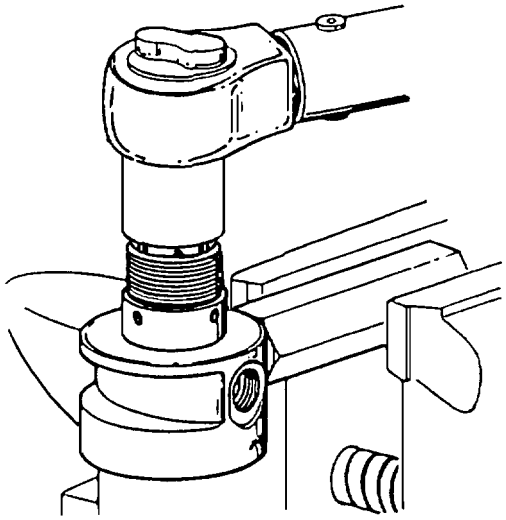

16063014

Step 14 - Para 16-63

NOTE

After completion of steps 15 through 17, the First-Stage Regulator Assembly must rest for a minimum of 8 hours and then be re-torqued. This will ensure proper seating of the burst disc and diaphragm.

15. Loosen the vise and turn the First-Stage Regulator over, so that the spring retainer (2) is facing straight up. Refasten the vise. Apply a torque wrench with a 1-inch hex socket and tighten the spring retainer to a torque measurement of 25 ±2 ft-lb.

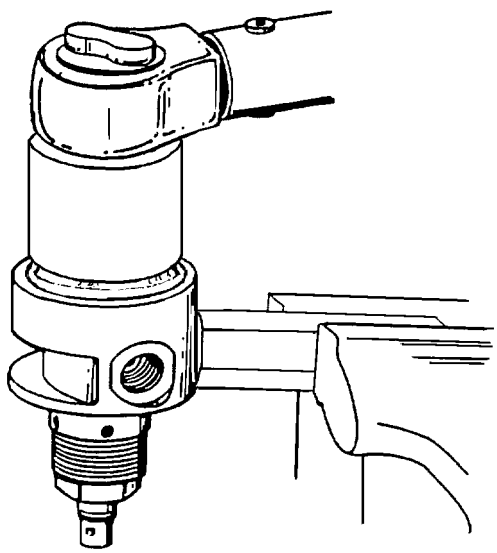

16063015

Step 15 - Para 16-63

CAUTION

The hose assembly port is the same size as the safety disc port. The safety disc port has HP engraved above it.

16. Loosen vise and rotate First-Stage Regulator so that the safety disc port is facing up. Retighten vise. Using a new safety disc subassembly, place the gasket (28) inside the smaller high pressure port. Press gasket in with a wooden dowel to ensure it is seated evenly at the base of the female threads. Place the new burst disc (29) inside the same port with red side facing out. Ensure it is seated evenly at the base of the female threads against the new gasket.

17. Mate the new safety plug (30) into the port, and thread clockwise until hand tight. Apply a torque wrench with a 1/2-inch hex socket to the safety plug, and tighten to a torque measurement of 90 ±5 in-lb.

18. After a minimum of 8 hours, re-torque the spring retainer and the safety plug in accordance with steps 15 and 17.

19. Loosen vise and rotate the first-stage so that the spring retainer is facing up. Check to ensure that the spring pad is positioned in the center of the diaphragm. Install the main spring (4) into the spring retainer (2), ensure spring is centered over the spring pad. Place main spring washer (3) on top of the spring.

20. Mate the first-stage adjustment screw (1) over the spring and washer, and turn it clockwise to engage the threads. Apply a 5/16-inch blade screwdriver to turn it until it is flush with the top of the spring retainer.

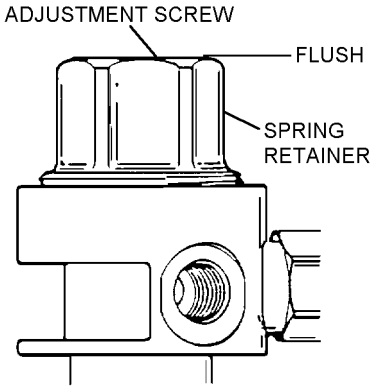

16063020

Step 20 - Para 16-63

21. Loosen the vise, remove the First-Stage Regulator, and remove the vise mounting tool from the high pressure port. Set the First-Stage Regulator aside.

CAUTION

Before reassembling the cylinder adapter onto the cylinder, it is necessary to perform a thorough visual inspection of the cylinder with the use of a visual inspection light. If the cylinder is found to be in an unsuitable condition, it must either be cleaned in accordance with paragraph 16-47 or be replaced with a new First-Stage Regulator Assembly.

22. Place lubricated O-ring (27) onto the threaded male stem of the cylinder adapter (26).

23. Apply a small amount of Christo-lube to the male threads of the cylinder adapter (26). Thread the cylinder adapter clockwise into the cylinder (33) until hand-tight.

24. Secure cylinder (33) using a padded vise or a cloth strap wrench. Apply a torque wrench with a 1 1/8-inch hex socket to the cylinder adapter and tighten to a torque measurement of 25 ±2 ft-lb.

25. Place the flat side of the indicator ring (12) over the male threads of the First-Stage Regulator body (10) so that the flat side of the indicator ring is flush against the regulator body, and the OFF aperture is facing down.

26. Apply anti-seize lubricant generously to the male threads of the First-Stage Regulator and to the female threads of the cylinder adapter.

27. While holding the First-Stage Regulator and indicator ring together, mate them to the cylinder adapter (26). Firmly tighten and then loosen the First-Stage Regulator to the cylinder three times to ensure proper rotation and distribution of the anti-seize lubricant to all the threads. Turn the First-Stage Regulator clockwise by hand, and stop when resistance is felt.

28. While holding cylinder upright, rotate indicator ring to align the set screw hole with the threaded hole in the First-Stage Regulator body that is to the immediate right of the indicator pin.

WARNING

Failure to check security of the ON/OFF indicator ring set screw may cause cylinder and First-Stage Regulator Subassembly to separate resulting in the cylinder becoming a projectile, which could cause serious injury or death.

29. Mate the set screw (11) into the set screw hole of the indicator ring and into the hole of the First-Stage Regulator body using a 1/16-inch hex key. Tighten the set screw until snug. Indicator ring should not rotate. Apply torque sealant to set screw.

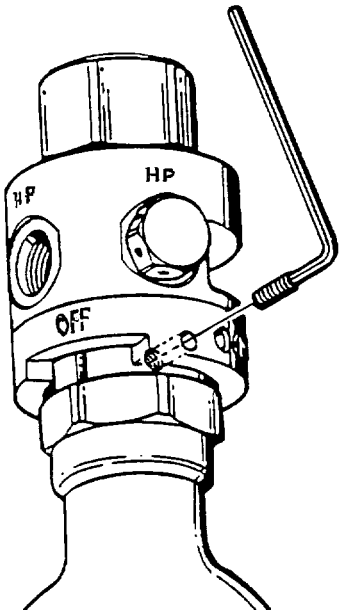

16063028

Step 28 and 29 - Para 16-63

30. While holding the cylinder securely, turn the First-Stage Regulator further clockwise until snug. The indicator pin should be visible inside the OFF aperture of the indicator ring. Resistance should be felt before the indicator pin reaches the far right side of the OFF aperture.

NOTE

If resistance is not felt before the indicator pin reaches the far right side of the OFF aperture, remove set screw and repeat steps 28 thru 30.

31. Install lubricated O-ring (13) onto the swivel fitting (14) at the base of the male threads. Install two lubricated O-rings (34) into the two grooves on opposite sides of the center orifice on the swivel fitting.

32. Mate the threaded stem of the swivel fitting (14) into the First-Stage Regulator swivel fitting port, and turn clockwise until hand tight. Apply a torque wrench with a 5/32-inch allen key socket to the swivel fitting and tighten it clockwise to a torque measurement of 60 ±3 in-lb.

33. Place the banjo fitting of the hose assembly directly over the swivel fitting (14) and press straight down until it is seated at the base.

34. Closely examine the replacement hose snap ring (36) to identify that it is flat on one side and slightly rounded on the other. Apply external snap ring pliers to install the snap ring into the groove of the swivel fitting with its flat side facing outward, and ensure that it is securely fastened over the banjo fitting of the hose.

35. Install lubricated O-ring (37) to the opposite end of the hose. Set First-Stage Regulator and hose assembly aside.

16-64. SECOND-STAGE REGULATOR ASSEMBLY. Before performing any reassembly, it is important to inspect all parts both old and new to ensure every part is perfectly clean and free of any dust, corrosion or blemishes. Before dressing O-rings with Christo-lube, check each O-ring to ensure it is clean, supple, and free of any blemish. Lubricate all O-rings in accordance with paragraph 16-62.

Materials Required

Quantity	Description	Reference Number
As Required	Christo-Lube (Note 1)	MCG-111 (2 oz. Tube, NIIN 01-441-9016)
1	Second-Stage Regulator Service Kit	1028-82

Notes: 1. Christo-Lube may be open purchased from:
Lubrication Technology Inc.
310 Morton St.
Jackson, OH 45640
Phone - 740-286-2644

Support Equipment Required

Quantity	Description	Reference Number
1	Retaining Ring Wrench	M1001-88 NIIN 01-452-7269
1	13/16-in Hex Socket	—
1	Torque Wrench (micrometer) 30 - 150 in-lb	—
1	Wooden Dowel	NIIN 00-240-0677
1	Cable Tie Attachment Tool	—

CAUTION

Do not tighten parts beyond their torque specification when reassembling. Some parts are made of either marine brass or plastic, and can be permanently damaged by undue stress.

NOTE

Unless otherwise indicated, for all index numbers listed in the following text, refer to figure 16-8.

1. Install lubricated O-ring (21) onto the vane switch (20).

2. Mate the vane switch into its respective hole in the box bottom (22) and press it down into place so that it is properly sealed inside the box bottom.

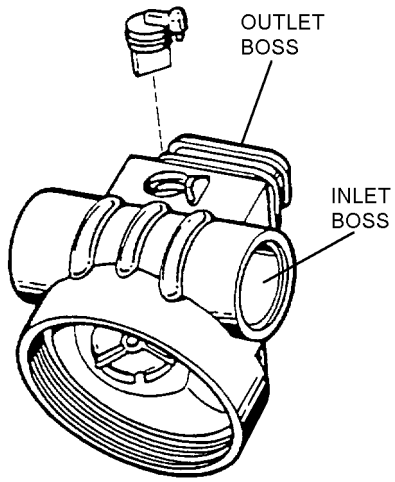

16064002

Step 2 - Para 16-64

3. While holding the switch in place, stand the box bottom on the flat surface of the outlet boss, with the open side of the box bottom facing forward. Lay the snap ring (16) inside the air outlet boss of the box bottom, with the its flat side of the snap ring facing up. Rotate the snap ring as needed to position the open end directly behind the stem of the vane.

4. Place a screwdriver squarely behind the snap ring, and press the snap ring evenly through the groove between the box bottom and the switch until it audibly snaps into place. Examine closely to ensure that the snap ring is seated evenly over the stem of the vane, inside the groove.

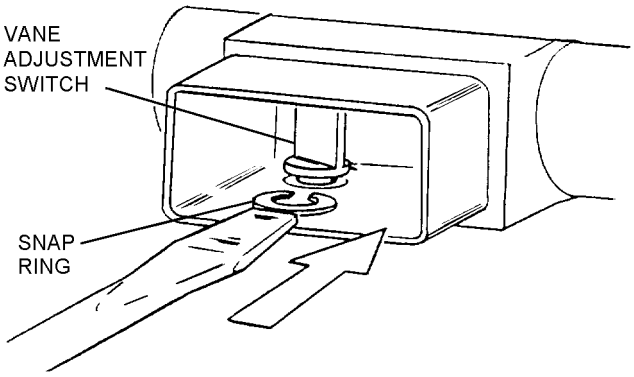

16064003

Step 3 and 4 - Para 16-64

NOTE

Closely examine the crown (25) for nicks, defective threads and plating before installing. If damage is found replace second-stage assembly.

5. Install lubricated O-ring (26) onto the crown (25), and carefully insert the threaded end of the crown into the inlet end (male threaded end) of the valve body (23). Gently press it in further with the end of a wooden dowel until it stops.

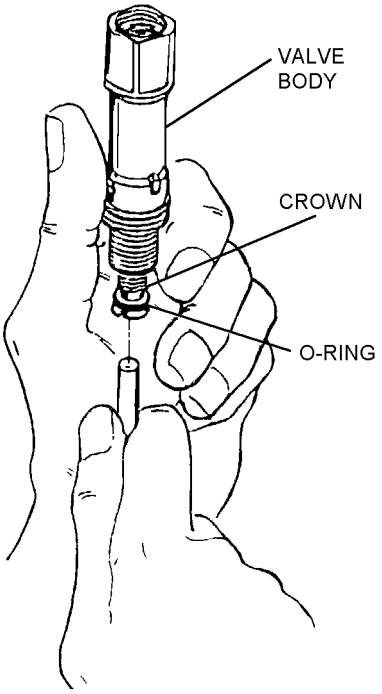

16064005

Step 5 - Para 16-64

NOTE

Do not attempt to thread the adjustable crown into the valve body.

6. Firmly press the LP seat (15) into the cavity on the end of the poppet (14), checking first to ensure that the smooth side of the seat is facing out.

7. Hold the valve body positioned so the two large holes in its center are facing up. Examine the poppet (14) to identify the rib that has a hole through it. Place the poppet all the way inside the female open end of the valve body and ensure that the rib which contains the hole is aligned opposite of the large holes.

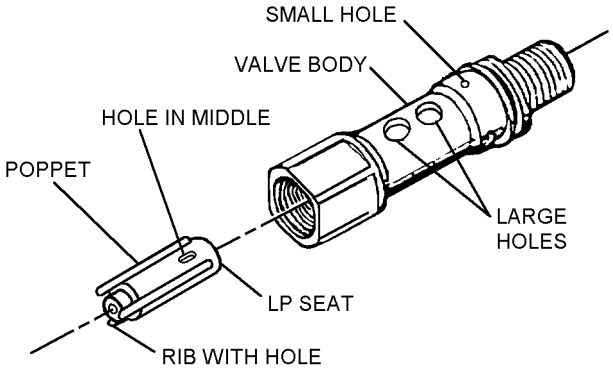

16064007

Step 7 - Para 16-64

NOTE

The valve body and box bottom are keyed to ensure the correct orientation between the two pieces.

8. Carefully rotate the valve body 180° so that the recessed retaining pin hole for the lever retaining pin is visible and facing straight up. While holding the valve body horizontal, mate the square end of the valve body through the round opening of the box bottom. Pass the valve body through until about 1/2 inch of the square end protrudes out from the side of the box bottom. Ensure that the retaining pin hole in valve body is visible from the top opening of the box bottom and the large holes in the middle of the valve body face toward the mouthpiece opening.

9. Insert the notched end of the lever (5) into the oval hole of the valve body that is just below the recessed retaining pin hole. Stand the lever up vertically, straight out of the box bottom. Insert the small end of the retaining pin (6) into the hole and through the notched section of the lever. If necessary, gently tug on the lever until the head of the pin is completely recessed into the valve body.

10. Push the square end of the valve body back into the box bottom until it is flush with the side of the box bottom.

11. Insert the poppet spring (13) into the square end of the valve body, and check to ensure that it seats evenly over the end of the poppet.

12. Install the washer (12) onto the stem of the adjustment screw (11). Mate the adjustment screw through the square end of the valve body ensuring the stem is positioned into the center of the spring. Turn adjustment screw clockwise by hand to engage the threads.

CAUTION

Failure to stand the lever up before attempting to move the valve body may result in permanent damage to the box bottom, lever or both.

13. Push square end of valve body inward to reveal O-ring groove on male threaded end of valve body. Install lubricated O-ring (24) into the groove on the male threaded end. Carefully push the valve body back into the box bottom until the square end is flush with the box bottom.

NOTE

Putting O-ring on earlier may cut O-ring during assembly process and cause malfunction of the HABD.

14. Thread the hex nut (27) by hand onto the inlet of the valve body while holding the box bottom securely. Apply a torque wrench with a 13/16-inch hex socket and tighten the hex nut to a torque measurement of 45 ±5 in-lb.

NOTE

If lever has been properly installed, it will rise slightly as the adjustment screw is turned into the valve body.

15. Using a 1/8-inch blade screwdriver, turn the adjustment screw (11) clockwise until approximately 10 - 12 threads are visible. Check that the lever springs up when pressed down.

CAUTION

Always depress the purge lever while adjusting the orifice. Failure to depress the purge lever while turning the orifice will cause damage to the low pressure seat, and possibly to the orifice crown, requiring replacement of the Second-Stage Regulator.

16. While pressing the purge lever down toward the exhaust valves, apply a medium blade screwdriver to turn the crown (25) clockwise six (6) 360° turns.

17. Install each exhaust valve diaphragm (7) into the box bottom by gently pulling the stem through the hole in the center of the support spokes until the barb has passed through and is securely seated. Carefully snip off the excess material of each stem with a small pair of scissors leaving approximately 1/4 inch of stem.

18. Examine the exhaust cover (8) and the box bottom to identify the locking tabs and grooves of each respective part. Press one corner of the exhaust cover onto the box bottom until the mating tab snaps into place. Press the center tab next, followed by the tab of the opposite corner, and check to ensure that all three tabs are securely locked into their respective grooves.

19. Install the mouthpiece (19) onto the Second-Stage Regulator, and lightly fasten the mouthpiece cable tie (17) onto the groove of the mouthpiece. Turn the cable tie so that the locking tab is aligned with either short side of the mouthpiece. Using a cable tie attachment tool at setting number 3, tighten cable tie around mouthpiece. Set Second-Stage Regulator aside.

16-65. FINAL ADJUSTMENT AND TESTING PROCEDURES. The HABD requires 3000 psi to perform the adjustment procedures.

16-66. First-Stage Regulator Adjustment.

Support Equipment Required

Quantity	Description	Reference Number
1	Intermediate Pressure Test Gage	M1116-10
1	Compressed Air Refill Assembly, CQU-10/U	1586AS401-1

NOTE

CQU-10/U must have a minimum of 3000 psi of supply pressure to perform the adjustment and testing procedures. (A maximum of 3500 psi is optimal)

1. Open supply valve to the CQU-10/U. Verify the supply gage reads between 3000 and 3500 psi.

NOTE

Intermediate test pressure gage (IP gage) requires yearly calibration.

2. Ensure HABD is empty and in the ON position. Connect the intermediate pressure (IP) test gage (P/N M1116-10) to the hose assembly of the HABD and hand tighten. Ensure bleeder valve on the IP test gage is closed.

CAUTION

Do not apply a wrench or otherwise overtighten the refill adapter of the CQU-10/U into the First-Stage Regulator Assembly.

3. Inspect the fill nozzle of the CQU-10/U refill adapter to ensure the O-ring is present and seated evenly at the base of the threads. Apply a light coating of Christo-lube to the O-ring. Thread the fill nozzle of the refill adapter into the pressure gage subassembly port of the HABD. Turn clockwise until hand tight.

4. Check to ensure that the first-stage adjustment screw is flush with the top of the spring retainer. If not, adjust with a 5/16-inch screwdriver.

WARNING

After tilting the toggle valve of the CQU-10/U to apply pressure to the HABD, observe the intermediate pressure on the IP test gage. If the pressure reaches or exceeds 220 psi, let go of the toggle valve and immediately open the IP test gage bleed valve to release pressure from HABD. Failure to let go of the CQU-10/U toggle valve before the intermediate pressure exceeds 220 psi will result in damage to the IP test gage or hose and may cause serious personal injury.

CAUTION

Always fill the HABD slowly by tilting the fill valve (toggle valve) of the CQU-10/U to control the rate of fill. Fill at a rate of 500 psi per minute with two minute intervals of cool down period. If the cylinder becomes warm to the touch during or after filling, the fill rate was too rapid.

Failure to cycle the IP test gage bleed valve, open and shut, during filling and adjustment, may cause a false reading of the intermediate pressure.

5. Place HABD in CQU-10/U blast tube. While holding the IP test gage, fill the HABD to 3000 psi by slowly tilting the toggle valve on the CQU-10/U. Continue to fill the HABD until the fill pressure gage on the CQU-10/U reads 3000 psi. Cycle the IP test gage bleed valve open and shut two to three times during filling. IP pressure gage should stabilize below 180 psi. Continue to closely monitor the IP test pressure gage to ensure the intermediate pressure does not rise above 220 psi while filling.

NOTE

Maintain 3000 psi of pressure on the HABD during adjustments.

6. When the intermediate pressure has stabilized, apply a 5/16-inch blade screwdriver to the First-Stage Regulator adjustment screw (1, figure 16-7) and turn either clockwise or counter-clockwise to adjust the IP pressure to read 140 ±5 psi. While adjusting the IP pressure be sure to cycle the bleed valve, open and shut, to get an accurate reading.

7. Turn the HABD to the OFF position. Open the bleed valve of the IP test gage to depressurize the First-Stage Regulator and hose assembly. Check fill pressure on CQU-10/U to ensure that it is depressurized. Remove the IP test gage from the hose assembly.

16-67. Second-Stage Regulator Adjustment.

Materials Required

Quantity	Description	Reference Number
As Required	Christo-Lube (Note 1)	MCG-111 (2 oz. Tube, NIIN 01-441-9016)
As Required	Torque Seal (Sealant)	F-900

Notes: 1. Christo-Lube may be open purchased from:
Lubrication Technology Inc.
310 Morton St.
Jackson, OH 45640
Phone - 740-286-2644

Support Equipment Required

Quantity	Description	Reference Number
1	In-line Adjustment Tool (Note 1)	M1001-95
1	Compressed Air Refill Assembly CQU-10/U	1586AS401-1
1	Second-Stage Lever Gauge (Note 1)	1028-68
1	Intermediate Pressure Test Gage (Note 1)	M1116-10
1	11/16-inch Crow's Foot Socket	—
1	Retaining Ring Wrench (Note 1)	M1001-88
1	5/32-inch Allen Key Socket	—
1	11/16-inch Hex Socket	—

Notes: 1. Tools may be ordered open purchase from the following source:
U. S. Divers, Inc.
2340 Cousteau Court
Vista, CA 92083
760-597-5000 Ext. 5081, Military Sales

NOTE

Maintain 3000 psi of pressure to the HABD during adjustments.

Unless otherwise indicated, for all index numbers listed in the following text, refer to figure 16-8.

1. Attach the female fitting of the hose assembly to the male threads of the in-line adjustment tool. Pull back the knob of the in-line adjustment tool to retract the adjusting stem and mate the female threaded end of the tool to the male threads of the Second-Stage Regulator.

NOTE

If air flow can be heard from the Second-Stage Regulator after turning HABD on, turn HABD off and refer to table 16-5, Trouble-shooting Guide.

2. Slowly turn the HABD on, place in blast tube and top-off to 3000 psi if necessary.

WARNING

Over-adjustment of either the orifice (25) or the adjustment screw (11) will cause excessive spring load in the second-stage valve and will severely degrade the performance of the regulator.

3. Press the knob of the in-line adjustment tool inward, and gently turn the knob until it can be felt that the adjustment stem has mated into the slotted head of the orifice (25).

NOTE

While adjusting the orifice, periodically place the second-stage lever gauge on top of the box bottom and over the purge lever with the notched side facing the lever to inspect proper height of the lever.

4. While pressing inward on the knob of the in-line adjustment tool, turn the orifice (25) either clockwise or counter-clockwise a 1/4 turn at a time until the purge lever just makes contact with the bottom of the notched area of the second-stage lever gauge. Purge regulator a few times during adjustment by pressing on the purge lever (5). If properly adjusted, the lever will have slight free-play when gently pushing down or pulling up on the lever. After adjustment, release knob of the in-line adjustment tool.

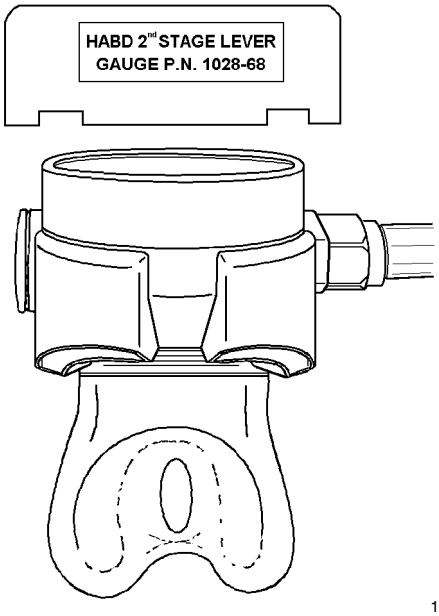

16067004

Step 4 - Para 16-67

NOTE

While turning the adjustment screw (11) clockwise, it is required to turn the adjustment screw back counter-clockwise periodically to relieve tension on the spring.

5. Apply a 1/8-inch blade screwdriver to the adjustment screw (11). Turn the adjustment screw counter-clockwise to initiate a very slight leak. When leak is detected, turn the adjustment screw clockwise in very small increments just until the leak stops. When leak has stopped, turn the adjustment screw clockwise three complete 360-degree turns.

6. Re-verify that the purge lever is still correctly adjusted utilizing the second-stage lever gauge. If not, repeat steps 3 and 4.

7. Turn off the HABD and purge the Second-Stage Regulator and hose assembly. Check fill pressure gage on CQU-10/U to ensure that it is depressurized.

8. Remove in-line adjustment tool from hose and Second-Stage Regulator.

9. Connect the IP test gage to the hose assembly of the HABD and hand tighten. Ensure bleeder valve on the IP test gage is closed.

10. Slowly turn the HABD on and ensure CQU-10/U fill pressure gage reads 3000 psi, top-off if necessary. Ensure the IP pressure on IP test gage still reads 140 ±5 psi. If not, re-adjust in accordance with paragraph 16-66.

WARNING

Movement of purge cover may cause diaphragm to unseat and become damaged causing a malfunction of the second stage regulator. Ensure purge cover does not move during the installation of the retaining ring.

11. Close HABD and open bleed valve of IP test gage to bleed pressure from hose and Second-Stage Regulator. Check fill pressure gage on CQU-10/U to ensure that it is depressurized. Remove the IP test gage from the hose assembly and disconnect the fill adapter from the pressure gage subassembly port of the HABD.

12. Install lubricated O-ring (10) onto cap plug (9) and install cap plug into end of valve body on the Second-Stage Regulator. Apply a torque wrench with a 5/32-inch allen key socket to the cap plug and tighten to a torque measurement of 30 ±2 in-lb.

CAUTION

Place the 11/16-inch crow's foot socket on the torque wrench at a 90 degree angle to the handle. This will ensure a correct torque measurement.

13. Connect the female fitting of the hose assembly to the Second-Stage Regulator inlet. Hold the hex nut on the Second-Stage Regulator secure with a 13/16-inch open end wrench. Apply a torque wrench with a 11/16-inch crow's foot socket and tighten the hose assembly fitting to a torque measurement of 45 ±3 in-lb.

14. Install diaphragm into the box bottom (22) with its raised center facing up, and check to ensure it is evenly seated onto the shoulder at the base of the threads.

15. Using a cotton swab, lubricate the entire side and lip of the purge cover (3) with soapy water solution (4 parts water to 1 part soap). Place the purge cover directly over the diaphragm so the oblong vent holes located on the purge cover are parallel to the valve body.

WARNING

Movement of purge cover may cause diaphragm to unseat and become damaged causing a malfunction of the second stage regulator. Ensure purge cover does not move during the installation of the retaining ring.

16. Fit the retaining ring (2) down over the purge cover, slotted side facing up. While pressing down on purge cover with thumb to hold it in place, apply one pin of the retaining ring wrench to a slot in the retaining ring. Turn the retaining ring clockwise until it is snug. Apply both pins of the wrench to the retaining ring and tighten the retaining ring snug while continuing to press down on purge cover. Check to ensure that the purge cover has not rotated. Correct if necessary.

NOTE

Torque sealant used on purge cover must be visible. Do not use black.

17. Thread the hard purge cover (1) onto the box bottom and turn until hand tight. Apply torque sealant to the purge cover in two locations opposite of each other.

18. Ensure lubricated O-ring (32, figure 16-7) is on the dial gage (31, figure 16-7). Turn the dial gage clockwise to install into the First-Stage Regulator body. Apply a torque wrench with a 11/16-inch hex socket to tighten the dial gage to a torque measurement of 40 ±3 in-lb.

19. Turn HABD on and check dial gage to ensure that the pressure reads in the green area of the gage. If not, top-off HABD in accordance with paragraph 16-41.

20. Close HABD and depressurize Second-Stage Regulator and hose assembly by pressing on the purge button of the Second-Stage Regulator.

21. Perform Leak Test in accordance with paragraph 16-48.

22. If no other bottles are to be tested secure CQU-10/U. Turn the supply cylinder valve clockwise to close. Relieve pressure from the pressure regulator by holding the top-off adapter and tilting the toggle lever until the pressure regulator gage reads zero and no airflow can be heard.

23. Place protective cap over refill nozzle of the top-off adapter.

16-68. MARKING INSTRUCTIONS FOR THE SRU-40A/P RETROFIT ONLY.

NOTE

If existing label show signs of wear, etch the serial number and new configuration of bottle (i.e. SRU-40A/P) on the flat area of the cylinder bottom using an electric engraving tool.

1. Clean the area directly below the existing label with isopropyl alcohol. Remove backing from new label and place directly below the existing label.

2. On the existing label, use a pen or etching tool and cross out the “/P” on the SRU-40/P and etch “A/P”. On the part number, 1586AS301-1, cross out the “-1” and etch “-2”.

Section 16-3. Illustrated Parts Breakdown

16-69. GENERAL.

16-70. This section lists and illustrates the assemblies and subassemblies of the Helicopter Aircrew Breathing Device (HABD), Part Numbers 1586AS301-1, 1586AS301-2, and 1586AS301-3 or 1028-00. The HABD is manufactured by U.S. Divers, Inc. (CAGE 94120).

16-71. The Illustrated Parts Breakdown (IPB) should be used when requisitioning parts.

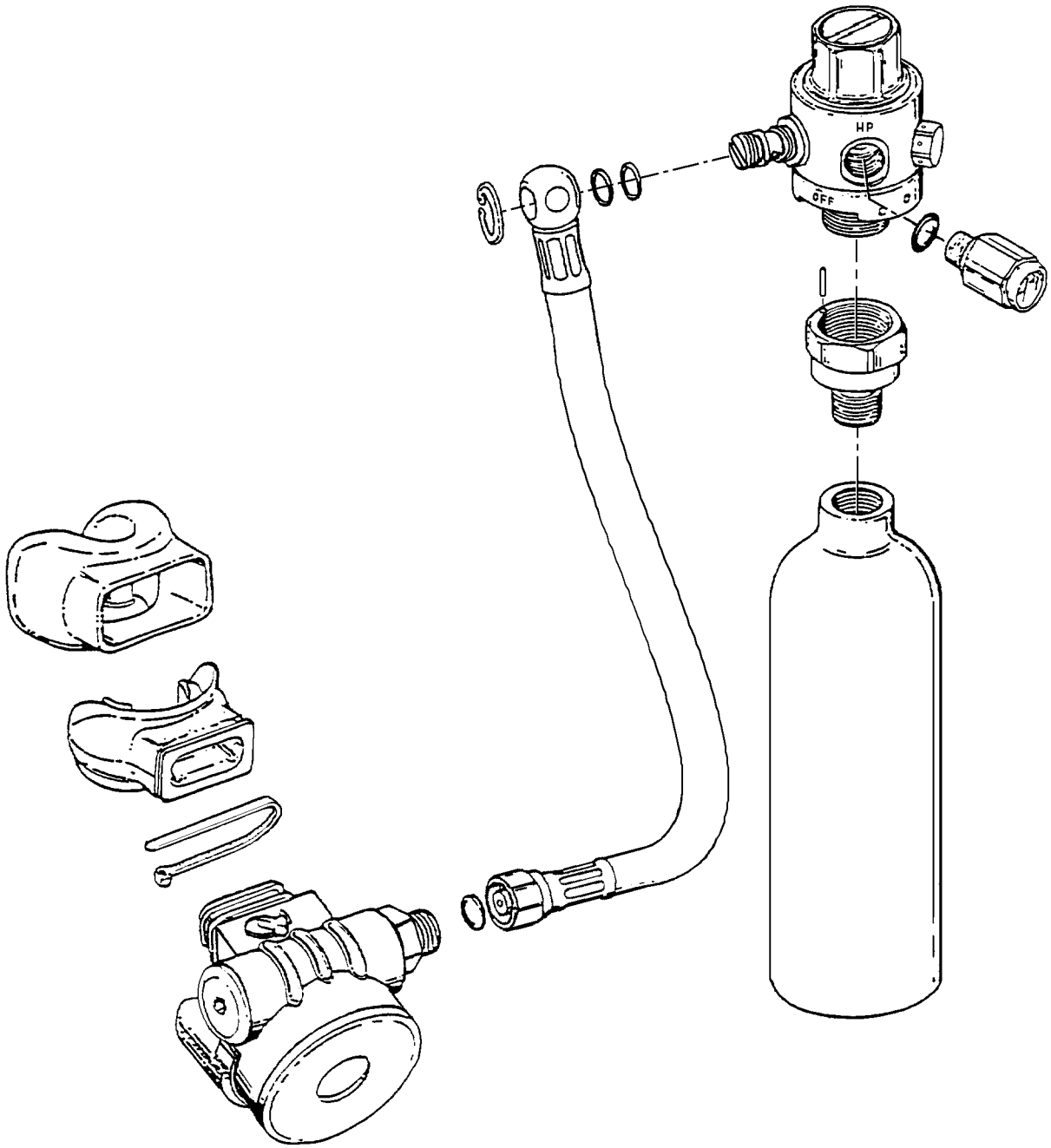

NOTE: SRU-40/P, P/N 1586AS301-1, HAS BEEN SUPERSEDED BY SRU-40A/P AND SRU-40B/P. REFER TO FIGURE 16-10.

016009

Figure 16-9. Helicopter Aircrew Breathing Device, SRU-40/P

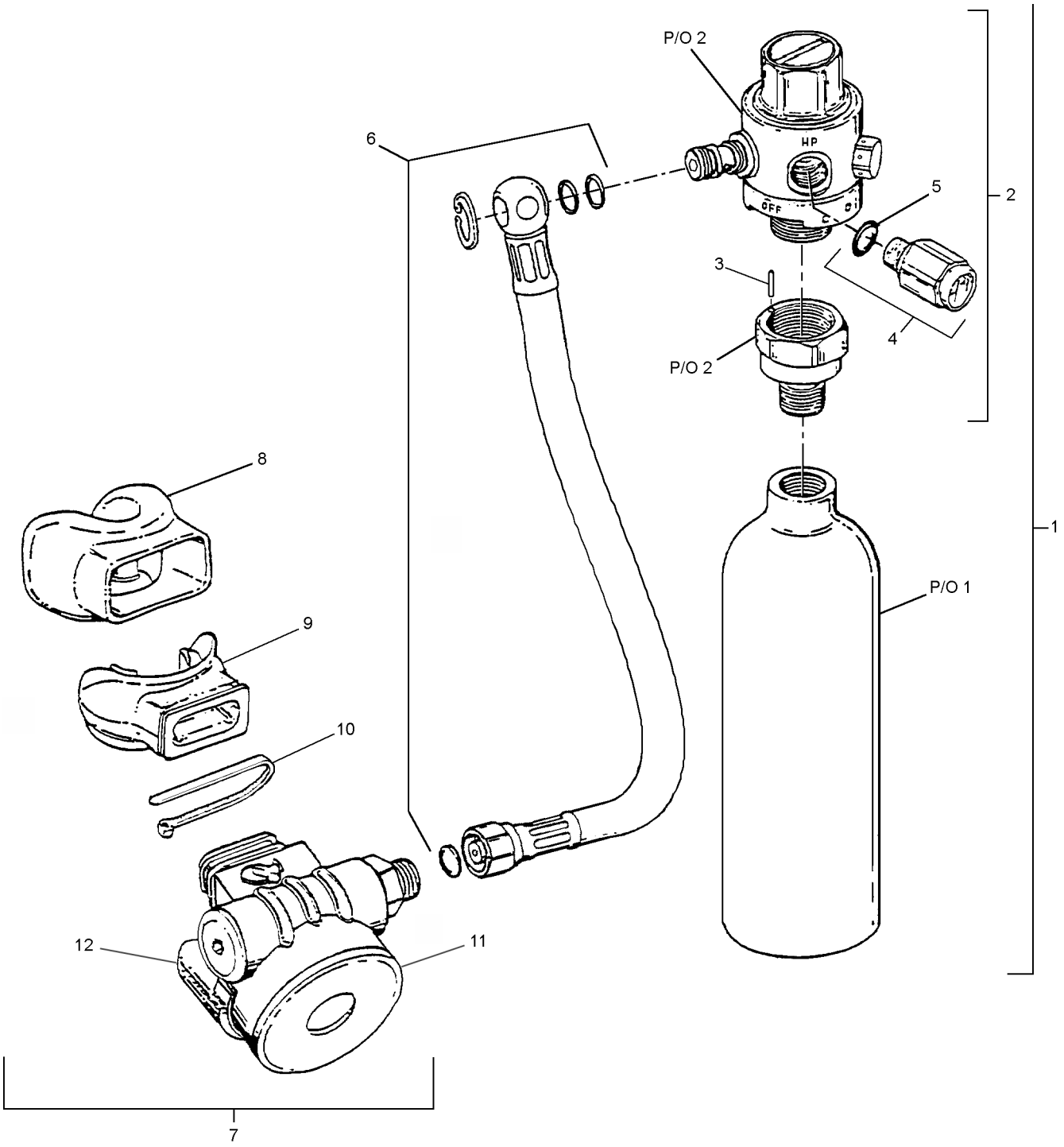

Figure 16-10. Helicopter Aircrew Breathing Device, SRU-40A/P and SRU-40B/P

Figure and Index Number	Part Number	Description 1 2 3 4 5 6 7	Units Per Assembly	Usable On Code
16-10	1586AS301-2	HELICOPTER AIRCREW BREATHING DEVICE, SRU-40A/P	REF	A
	1586AS301-3	HELICOPTER AIRCREW BREATHING DEVICE, SRU-40B/P	REF	B
	1028-00			
-1	1006-74	First-Stage Regulator ASSEMBLY (Note 1)	1	A
	1028-74	First-Stage Regulator ASSEMBLY (Note 1)	1	B
-2	1006-71	First-Stage Regulator SUBASSEMBLY (Note 1)	1	A
	1028-71	First-Stage Regulator SUBASSEMBLY (Note 1)	1	B
-3	1006-09	INDICATOR PIN (Note 2)	1	
-4	1028-73	PRESSURE GAGE SUBASSEMBLY (Note 2)	1	
-5	8203-19	O-RING, Pressure Gage (Note 2)	1	
-6	1028-75	HOSE ASSEMBLY	1	
-7	1028-72	Second-Stage Regulator ASSEMBLY	1	
-8	1006-53	MOUTHPIECE COVER (Note 2)	1	
-9	1058-31	MOUTHPIECE (Note 2)	1	
-10	1049-13	CABLE TIE, Black (Note 2)	1	
-11	1006-52	Hard Purge Cover (Note 2)	1	
-12	1001-09	Exhaust Cover (Note 2)	1	
	1028-81	First-Stage Regulator SERVICE KIT (See Figure 16-11 for kit parts)	REF	
	1028-82	Second-Stage Regulator SERVICE KIT (See Figure 16-12 for kit parts)	REF	

Notes: 1. First-Stage Regulator Assembly, P/N 1028-74, and First-Stage Regulator Subassembly, P/N 1028-71 are SRU-40B/P components and will replace First-Stage Regulator Assembly, P/N 1006-74, and First-Stage Regulator Subassembly, P/N 1006-71, respectively, on the SRU-40A/P by attrition. When replacing the First-Stage Regulator Assembly on the SRU-40A/P with P/N 1028-74, the bottle shall be re-designated as SRU-40B/P.

2. Component may be open purchased from the following source if not available through supply:
U.S. Divers, Inc.
2340 Cousteau Court
Vista, CA 92083
POC: Military Dept
Phone: 760-597-5000 Ext. 5081
Toll Free: 877-252-3483
FAX: 760-597-4914

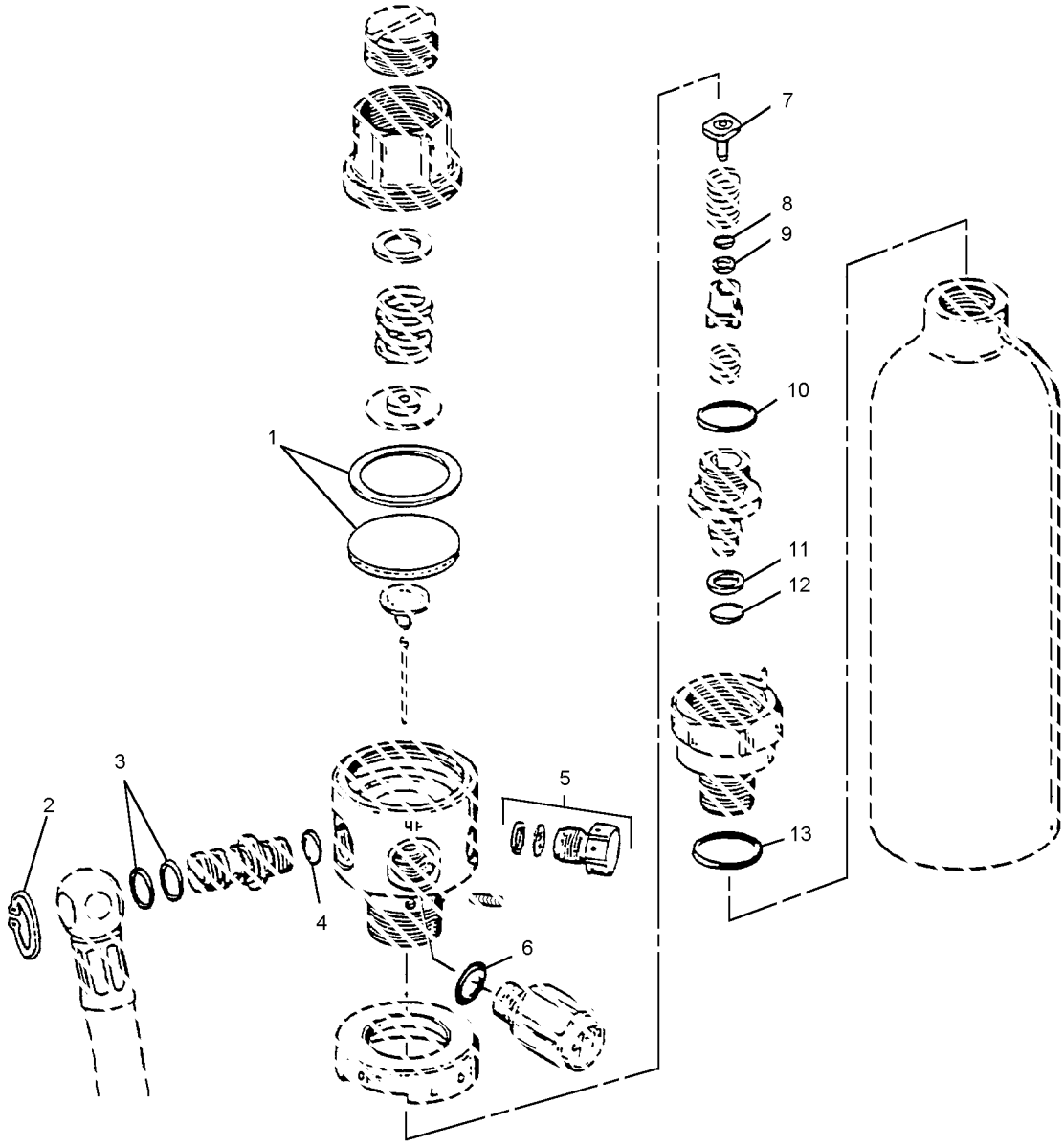

016011

Figure 16-11. First Stage Regulator Service Kit

Figure and Index Number	Part Number	Description 1 2 3 4 5 6 7	Units Per Assembly	Usable On Code
16-11	1028-81	First-Stage Regulator SERVICE KIT	REF	
-1	1034-25	. DIAPHRAGM KIT	1	
-2	8600-65	. HOSE SNAP RING	1	
-3	8203-12	. O-RING	2	
-4	8203-11	. O-RING	1	
-5	0502-41	. SAFETY DISC SUBASSEMBLY	1	
-6	8203-19	. O-RING	1	
-7	1053-21	. HP SEAT	1	
-8	8203-06	. O-RING	1	
-9	8280-05	. BACK-UP RING	1	
-10	8203-14	. O-RING	1	
-11	8285-10	. BACKUP RING	1	
-12	8203-10	. O-RING	1	
-13	8203-16	. O-RING	1	

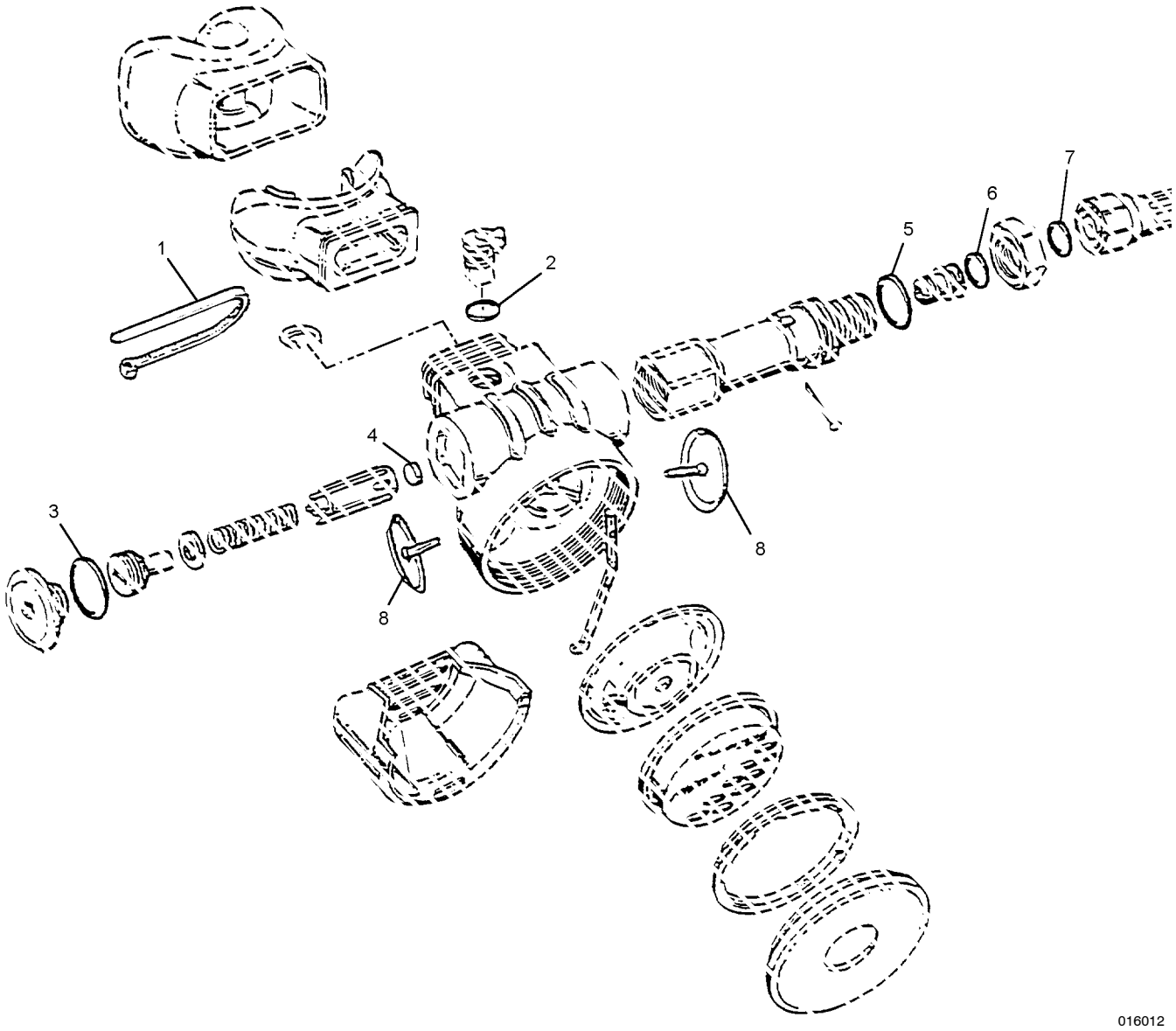

Figure 16-12. Second-Stage Regulator Service Kit

Figure and Index Number	Part Number	Description 1 2 3 4 5 6 7	Units Per Assembly	Usable On Code
16-12	1028-82	Second-Stage Regulator SERVICE KIT	REF	
-1	1049-13	. CABLE TIE	1	
-2	8203-10	. O-RING	1	
-3	8200-17	. O-RING	1	
-4	1067-38	. LP SEAT	1	
-5	8200-15	. O-RING	1	
-6	8203-10	. O-RING	1	
-7	8203-10	. O-RING	1	
-8	1001-22	. EXHAUST VALVE	2	

NUMERICAL INDEX

Part Number	Figure and Index Number	SM&R Code
0502-41	16-11-5	KFGZZ
1001-22	16-12-8	KFGZZ
1006-09	16-10-3	PAGZZ
1006-53	16-10-8	PAOZZ
1006-71	16-10-2	PAGGG
1006-74	16-10-1	PAGGG
1028-71	16-10-2	PAGGG
1028-72	16-10-7	PAGGG
1028-73	16-10-4	PAGZZ
1028-74	16-10-1	PAGGG
1028-75	16-10-6	PAGGG
1028-81	16-10-10	PAGZZ
	16-11	PAGZZ
1028-82	16-10-10	PAGZZ
	16-12	PAGZZ
1034-25	16-11-1	KFGZZ
1049-13	16-10-10	PAOZZ
	16-12-1	KFOZZ
1053-21	16-11-7	KFGZZ
1058-31	16-10-9	PAOZZ

Part Number	Figure and Index Number	SM&R Code
8600-65	16-11-2	KFGZZ
1067-38	16-12-4	KFGZZ
1586AS301-2	16-10	AGOGG
1586AS301-3	16-10	AGOGG
8200-15	16-12-5	KFGZZ
8200-17	16-12-3	KFGZZ
8203-06	16-11-8	KFGZZ
8203-10	16-11-12	KFGZZ
	16-12-2	KFGZZ
	16-12-6	KFGZZ
	16-12-7	KFGZZ
8203-11	16-11-4	KFGZZ
8203-12	16-11-3	KFGZZ
8203-14	16-11-10	KFGZZ
8203-16	16-11-13	KFGZZ
8203-19	16-10-5	PAOZZ
	16-11-6	PAOZZ
8280-05	16-11-9	KFGZZ
8285-10	16-11-11	KFGZZ

THIS PAGE INTENTIONALLY LEFT BLANK.

CHAPTER 17

LEG RESTRAINT GARTERS

Section 17-1. Leg Restraint Garters, EA-6B and F-14 Aircraft with GRU-Type Ejection Seats

17-1. DESCRIPTION.

17-2. The Leg Restraint Garters are fitted to an aircrew-member's legs and are attached to the ejection seat by leg restraint lines to provide leg restraint during ejection.

17-3. CONFIGURATION.

17-4. Each garter consists of two straps, each containing an adapter and a keeper and joined by two lengths of webbing. Attached to the lower strap is a quick release fitting for a quick release ring (figure 17-1). The quick release fitting under normal conditions provides a convenient separation from the ejection seat leg restraint lines by the aircrewmember. Under emergency conditions, the quick release fitting provides speedy leg separation from the ejection seat if the leg restraint lines do not release.

17-5. APPLICATION.

17-6. This garter is designed for EA-6B aircrewmembers using GRUEA7 and F-14 aircrewmembers using Type GRU7A ejection seats.

17-7. MODIFICATIONS.

17-8. There are no modifications to the Leg Restraint Garters authorized at this time. Repair and fabrication instructions are listed in table 17-1.

17-9. MAINTENANCE.

17-10. The aircrewmember's responsibility for garter maintenance is limited to inspection. Repairs or other maintenance actions required shall be performed by Intermediate Level maintenance or above, unless otherwise specified.

Table 17-1. Leg Restraint Garters, Restraint/Fabrications, EA-6B and F-14

Description of Repair/Fabrications	Repair Paragraph Number	Fabricate Paragraph Number
Leg restraint garter assembly	As required	17-25
Upper strap	17-18	17-21
Lower strap	17-18	17-22
Keeper	Replace	17-23
Connecting strap	Replace	17-24
Adapter, reversible, friction	Replace	N/A
Quick release fitting	Replace	N/A

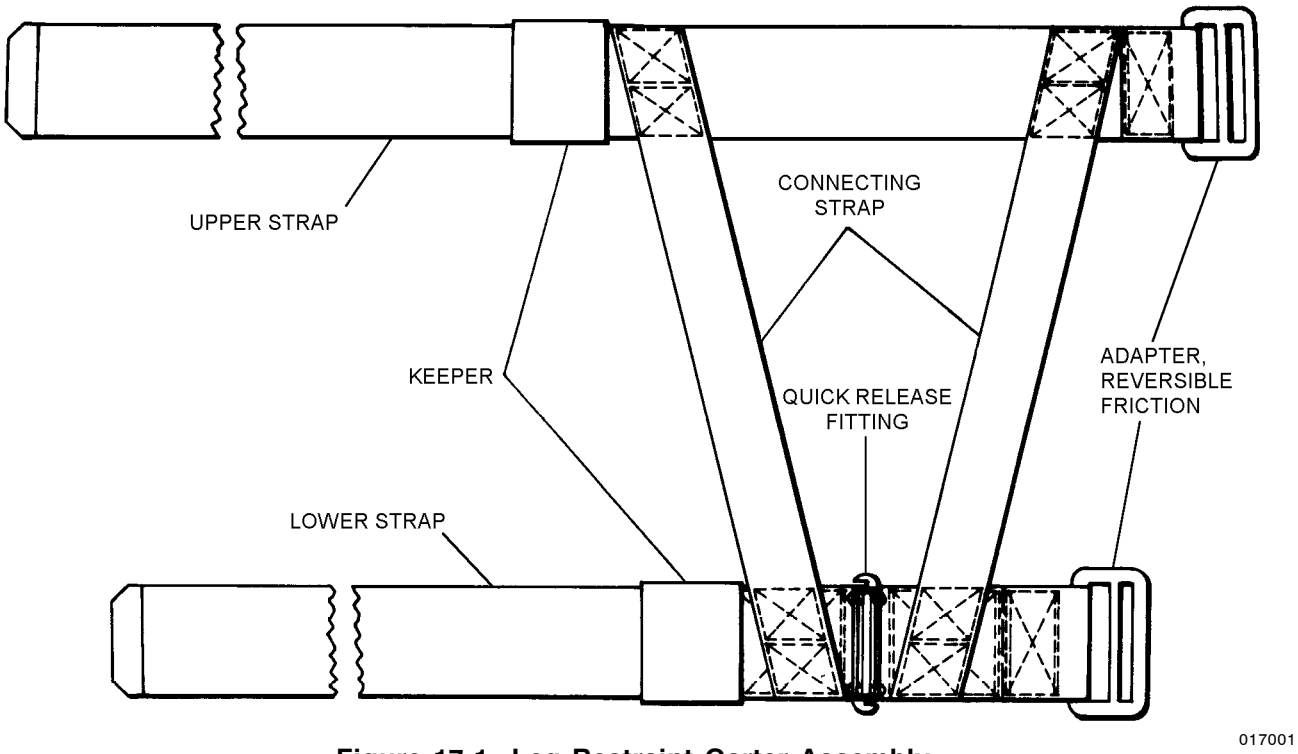

Figure 17-1. Leg Restraint Garter Assembly

17-11. INSPECTION. The garter shall be subjected to Preflight, Calendar and Issue Inspections by the aircrewmember before use.

17-12. Preflight Inspection. Examine the following:

1. Webbing: cuts, tears, open seams, contamination.
2. Stitching: loose, broken.
3. Hardware: corrosion, crack, secure.

17-13. Calendar Inspection. No calendar inspection is required.

17-14. Issue Inspection. Perform inspection before the garter is placed in service. Refer to paragraph 17-12.

17-15. CLEANING. Do not clean. Replace any contaminated webbing.

17-16. REPAIR. Repairs shall be performed by Intermediate maintenance or above using sage green colored materials or olive drab colored materials.

17-17. Webbing Stitch Repair. Start stitch at affected end, stitch across affected area to stitch line end. Use size 6 nylon thread (V-T-295), color optional. Stitches four to six per inch.

17-18. Upper/Lower Straps Webbing Repair. Damaged strap ends may be replaced. Refer to figure 17-2 for details.

Materials Required

Quantity	Description	Reference Number
As Required	Webbing, nylon, Type XXVII	MIL-W-4088 NIIN 00-530-1489
As Required	Thread, nylon, size 6, olive drab	V-T-295 NIIN 00-559-5211
	or	
	Thread, nylon, size 6 sage green	V-T-295 NIIN 00-204-3838

17-19. DISASSEMBLY. Remove and retain acceptable metal parts (3) for reuse from rejected leg restraint straps. Scrap webbing.

NOTE

Fabrication of leg garters is authorized to meet operational commitments after supply inventories have been exhausted and an active requisition for replacement is documented. Locally manufactured leg garters shall be replaced during scheduled maintenance by OEM leg garters when they become available.

17-20. FABRICATION. Instructions for fabrication of straps and garters are as follows:

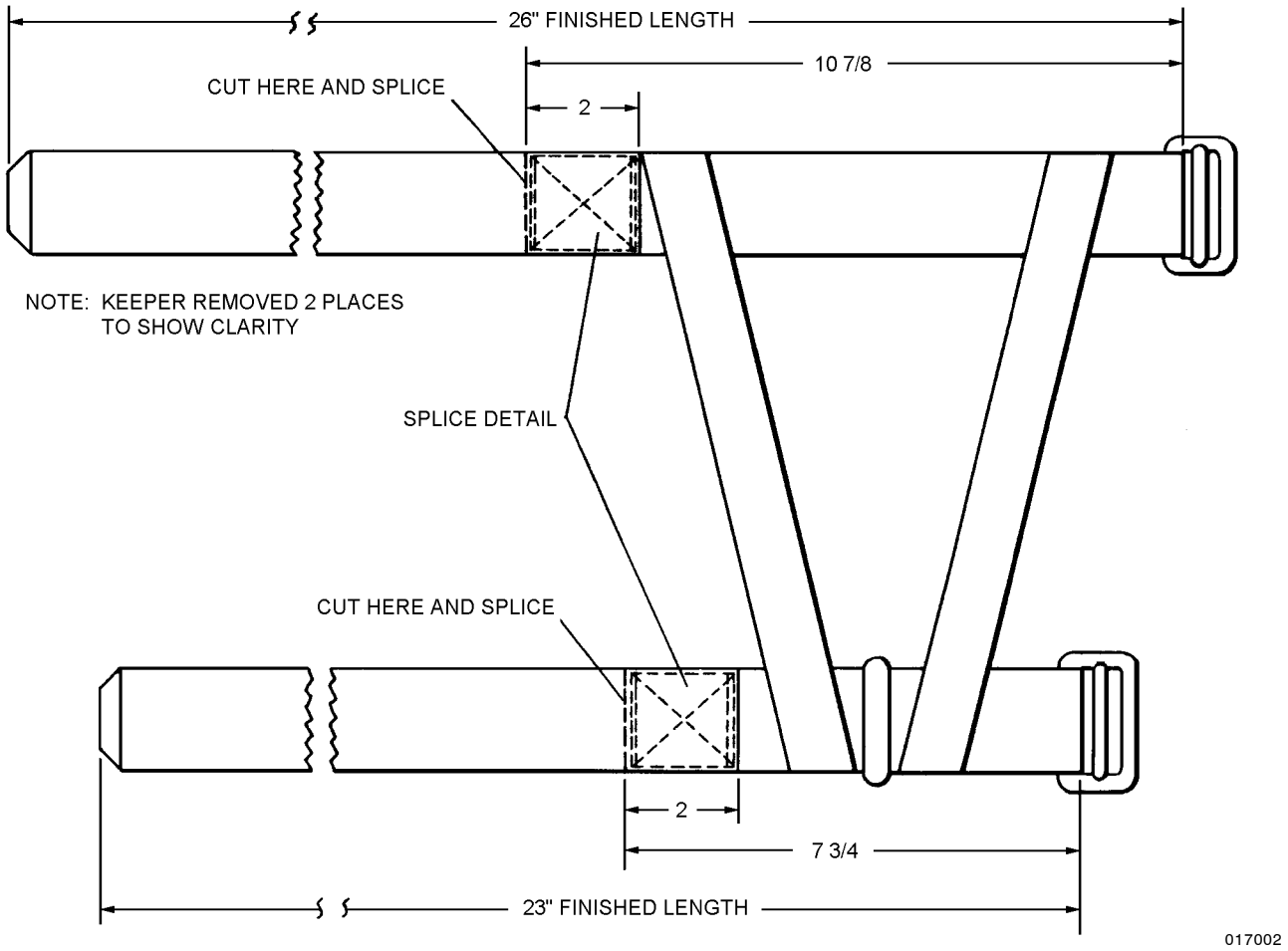

Figure 17-2. Upper and Lower Strap Repair

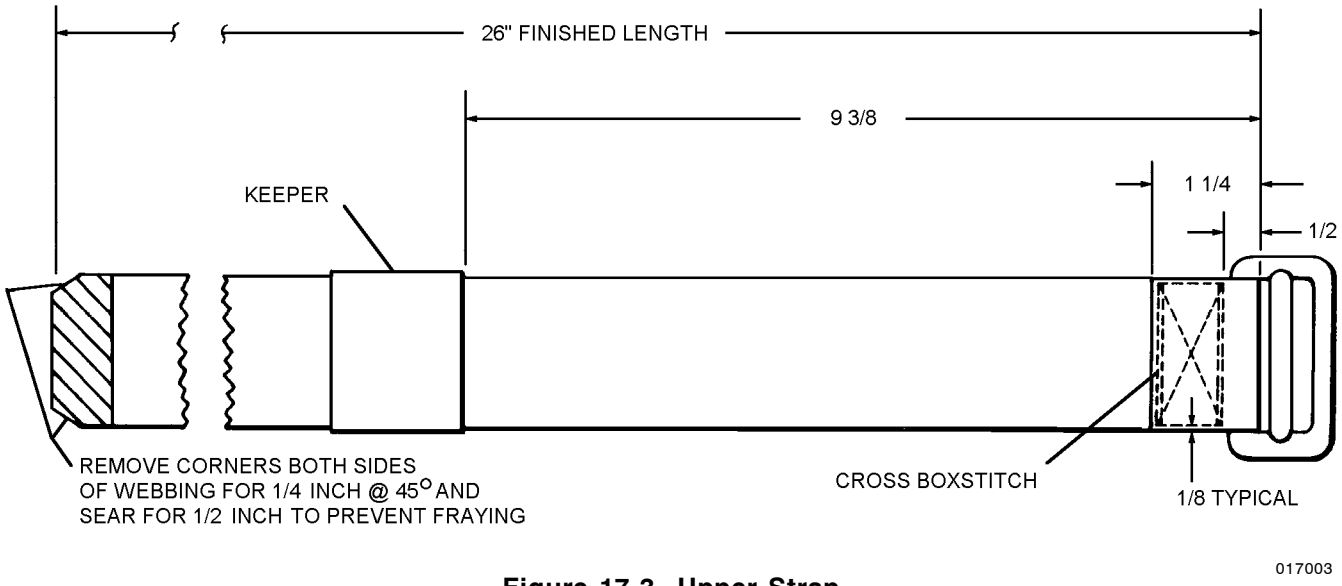

Figure 17-3. Upper Strap

17-21. Upper Strap Fabrication. Refer to figures 17-3 and 17-4 for details.

Materials Required

Quantity	Description	Reference Number
28 inches	Webbing, nylon, Type XXVII	MIL-W-4088 NIIN 00-530-1489
1	Keeper, elastic	See para 17-23
As Required	Thread, nylon, size E	V-T-295 NIIN 00-204-3884
As Required	Thread, nylon, size 6	V-T-295 NIIN 00-559-5211
1	Adapter, reversible, friction	MBEU-4045 NIIN 00-939-8441

1. Sear webbing end. Reeve through adapter.

2. Crossbox stitch adapter in place. Use thread size 6.

3. Sew keeper onto strap. Use thread size E.

4. Cut to correct length. Remove corners. Sear end.

17-22. Lower Strap Fabrication. Refer to figures 17-4 and 17-5 for details.

Materials Required

Quantity	Description	Reference Number
25 inches	Webbing, nylon, Type XXVII	MIL-W-4088 NIIN 00-530-1489
4-5/8	Webbing, nylon, Type XXVII	MIL-W-4088 NIIN 00-530-1489
1	Keeper, elastic	See para 17-23
As Required	Thread, nylon, size E	V-T-295 NIIN 00-204-3884

Materials Required (Cont)

Quantity	Description	Reference Number
As Required	Thread, nylon, size 6	V-T-295 NIIN 00-559-5211
1	Adapter, reversible, friction	MBEU-4045 NIIN 00-939-8441
1	Quick release fitting	MBEU-9070 NIIN 00-936-9726

1. Sear webbing end. Reeve through adapter.

2. Crossbox stitch adapter in place. Use thread size 6.

3. Install quick release fitting. Use 4-5/8 inch webbing. Use thread size 6.

4. Sew keeper onto strap. Use thread size E.

5. Cut to correct length. Remove corners. Sear end.

17-23. Keeper Fabrication. Refer to figure 17-6 for details.

Materials Required

Quantity	Description	Reference Number
4-3/4 inches	Webbing, elastic cotton, Class I, 1-1/2 inches wide gray	MIL-W-5664 NIIN 00-989-7171
As Required	Thread, nylon, size E	V-T-295 NIIN 00-204-3884

1. Locate and mark connecting strap on upper and lower straps.

2. Crossbox stitch connecting straps.

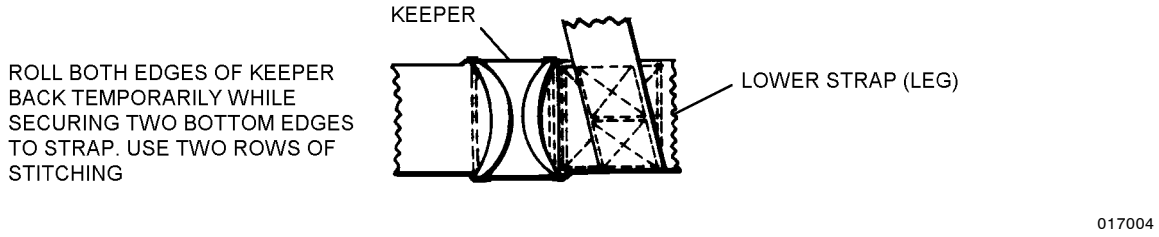

Figure 17-4. Slide Keeper Attachment Stitching (Typical)

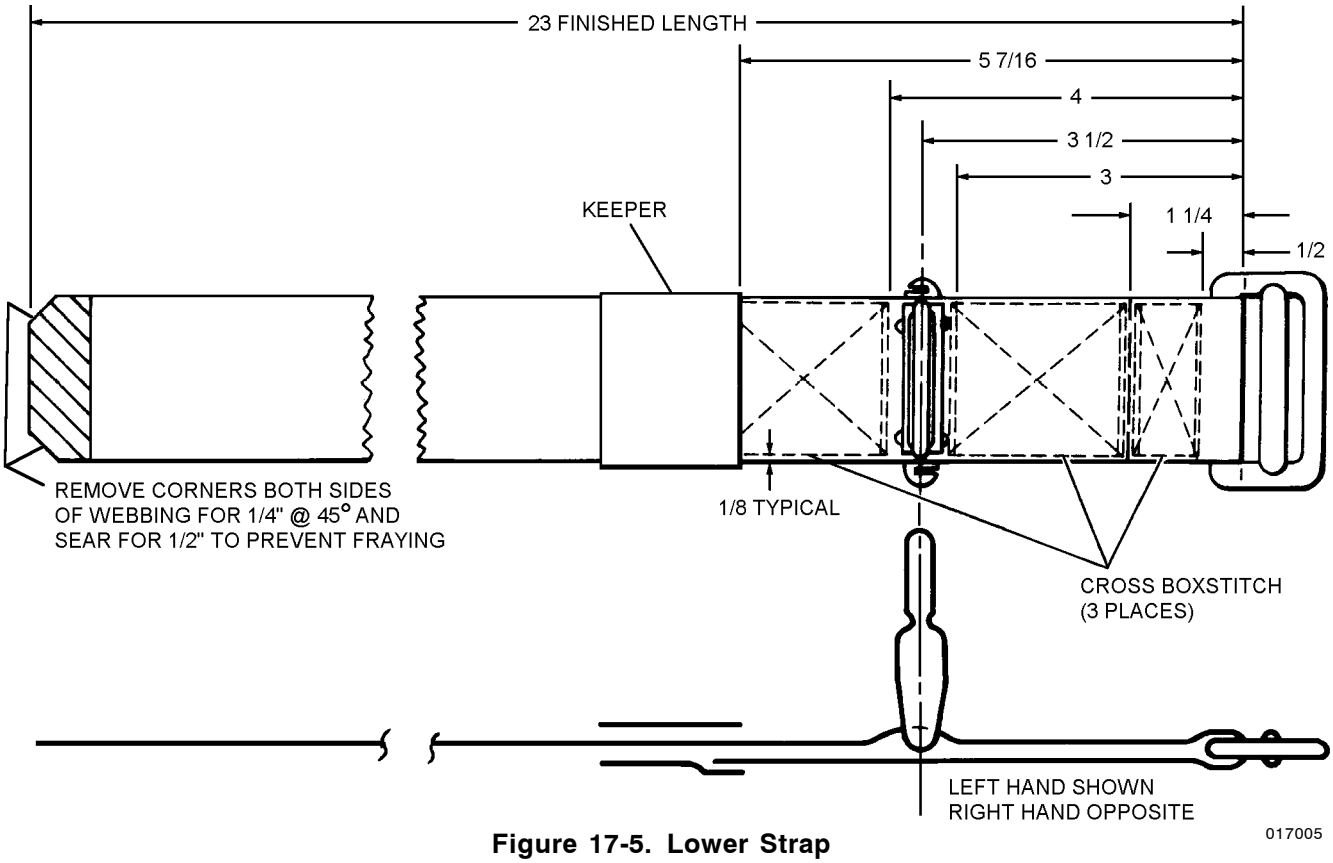

Figure 17-5. Lower Strap

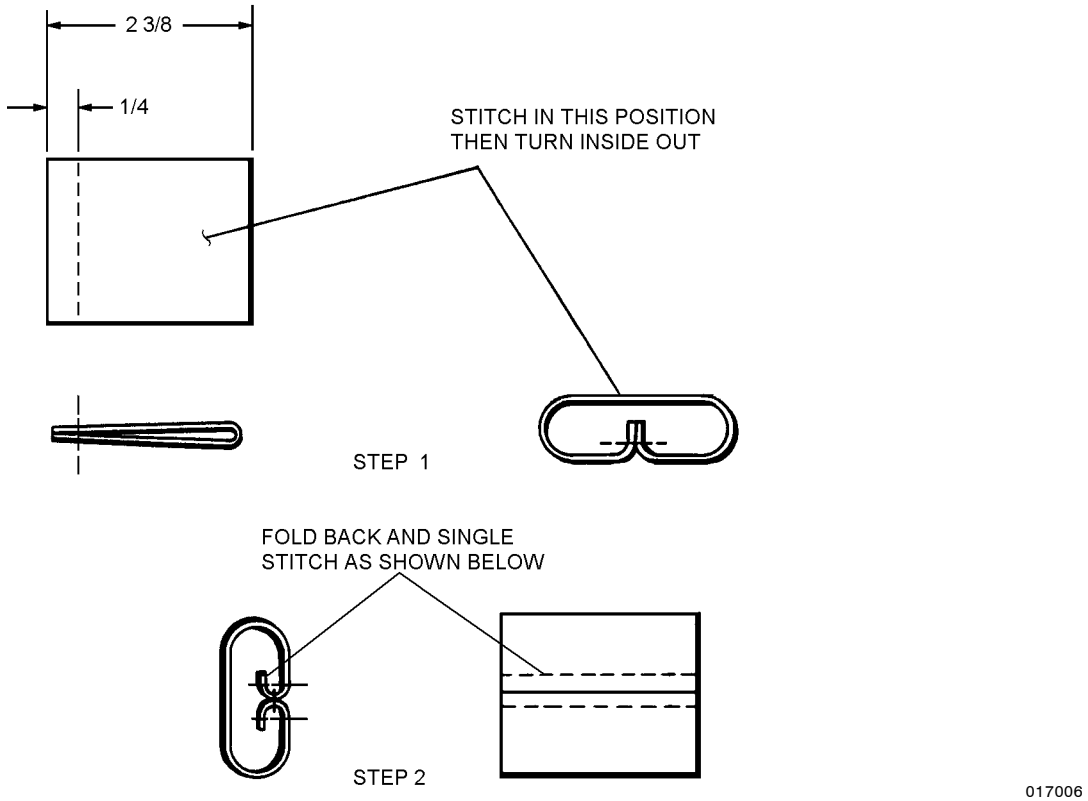

Figure 17-6. Keeper

17-24. Connecting Strap Fabrication. Refer to figure 17-7 for details.

Materials Required

Quantity	Description	Reference Number
22 inches	Tape, nylon, Type II, 1-inch	MIL-T-5038 NIIN 00-260-6910
	or	
	Tape, nylon, Type IV, 1-inch	MIL-T-5038 NIIN 00-261-8579
	or	
	Webbing, nylon, Type XVII, 1-inch	MIL-W-4088 NIIN 00-260-6906

1. Locate and align strap on upper and lower straps.
2. Trim to match upper and lower straps outer edges.
3. Sear tape at both ends.

17-25. Leg Restraint Garter Fabrication. Refer to figure 17-7 for details.

Materials Required

Quantity	Description	Reference Number
1	Upper strap	See para 17-21
1	Lower strap	See para 17-22
2	Connecting straps	See para 17-24
As Required	Thread, nylon, size 6	V-T-295 NIIN 00-559-5211

1. Stitch with green inside. Use thread size E.
2. Turn inside out when completed.

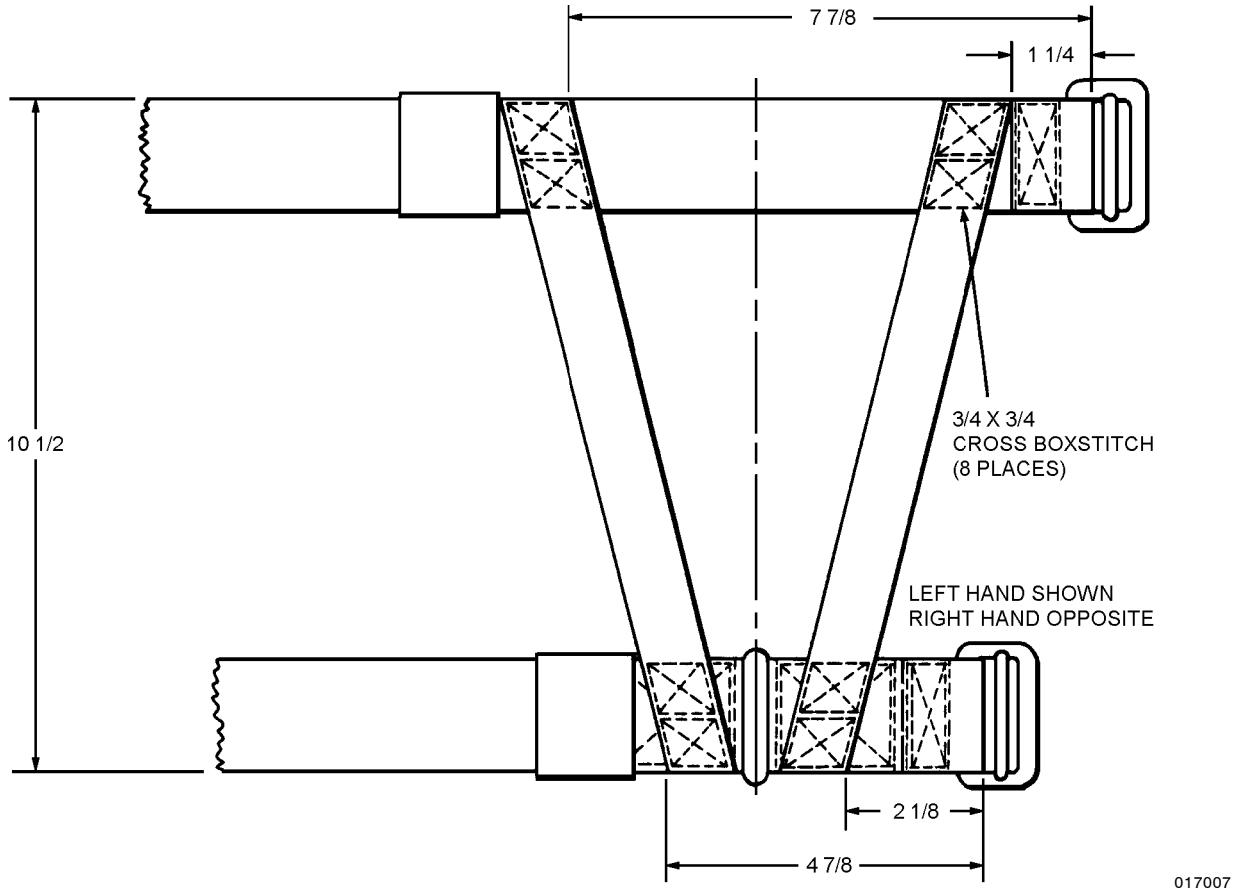

Figure 17-7. Connecting Straps Attachment to Upper and Lower Straps

Section 17-2. Leg Restraint Garters (P/N 12429-1), AV-8 Aircraft with SJU-Type Ejection Seats

17-26. DESCRIPTION.

17-27. The garters, (P/N 12429-1, CAGE 96916) are fitted to the aircrewmember's legs. They are worn at the mid-calf position of each leg. When they are attached to the garter attach rings of the seat, they provide leg restraint during ejection from the aircraft.

17-28. CONFIGURATION.

17-29. Each garter consists of a single webbing strap with a quick release type buckle on one end and an adjusting ring bayonet fitting at the other end of the strap. A second quick release buckle is provided for attachment to the seat leg restraint line. The garters can easily be detached from the seat leg restraint line at the adapter ring and therefore can be worn to and from the aircraft.

17-30. APPLICATION.

17-31. The Ejection Seat Leg Restraint Garter (figure 17-8) is designed for use in AV-8 aircraft equipped with ejection seat types SJU-1/A, SJU-2/A, SJU-3/A, SJU-4/A, SJU-13/A, or SJU-14/A.

17-32. MODIFICATIONS.

17-33. Modifications by AV-8 ACC 495 added velcro tape to the garter and redesignated the garter P/N 12429-1. No further modifications are authorized at this time. Repairs and fabrication instructions are listed in Table 17-2.

17-34. MAINTENANCE.

17-35. The aircrewmembers responsibility for garter maintenance is limited to inspection. Repairs or other maintenance actions shall be performed by Intermediate Maintenance Level or above unless otherwise specified.

17-36. INSPECTION. The garter shall be inspected by the aircrewmember before use.

17-37. Preflight Inspection. Examine the following:

1. Webbing for cuts, tears, open seams, and contamination.

2. Stitching for loose or broken stitches.

3. Hardware for corrosion, cracks, and security.

17-38. Calendar Inspection. No calendar inspection is required.

17-39. Issue Inspection. Perform inspection before the garter is placed in service. Refer to paragraph 17-37.

Table 17-2. Leg Restraint Garters, Repairs/Fabrications, AV-8

Description of Repair/Fabrications	Repair Paragraph Number	Fabricate Paragraph Number
Webbing Stitch Repair	17-42	
Leg Restraint Garter, P/N 12429-1		17-43

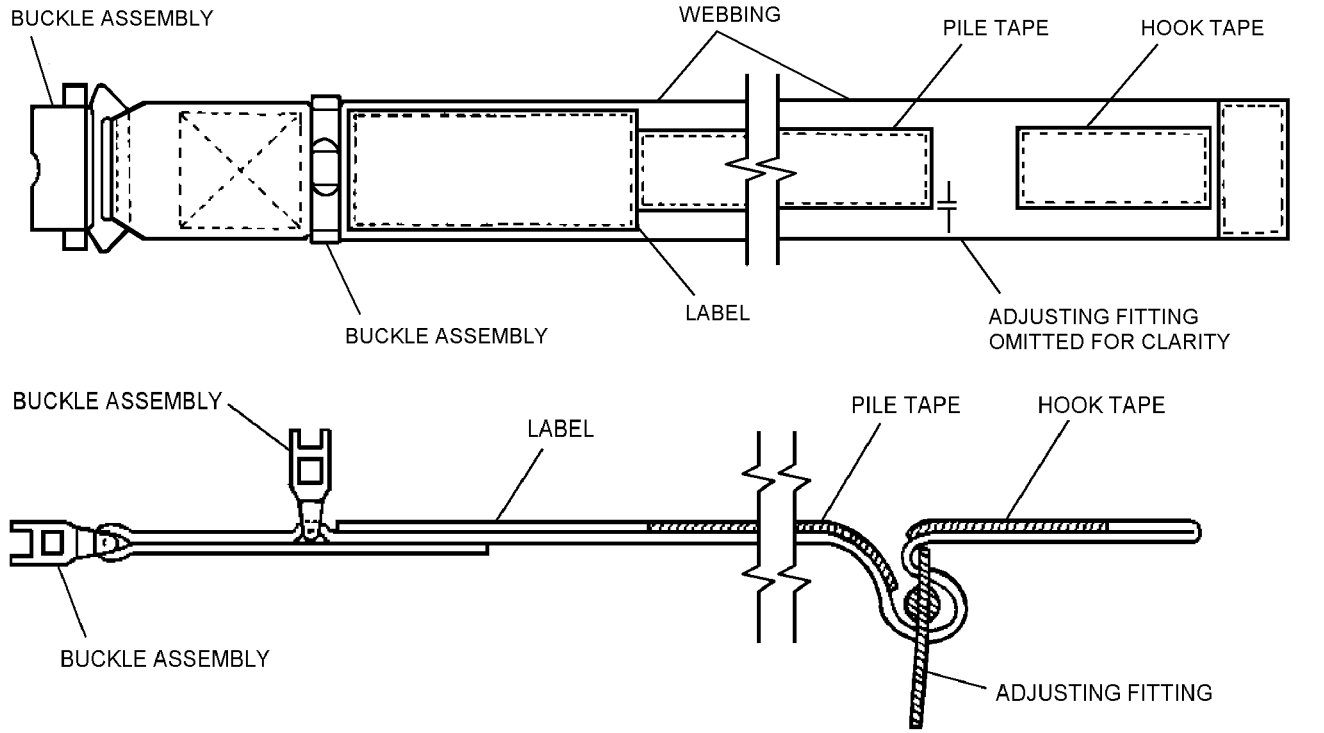

Figure 17-8. Leg Restraint Garter Assembly

017008

17-40. CLEANING. Do not clean. Replace any contaminated webbing.

17-41. REPAIR. Repairs shall be performed by Intermediate Maintenance or above.

17-42. Webbing Stitch Repair. Use size 6 nylon thread, color optional. Start stitching at affected end and stitch across affected area to stitch line end, stitches four to six per inch.

17-43. FABRICATION. Instructions for fabricating the Leg Restraint Garters for use in the AV-8 aircraft are as follows:

WARNING

Hardware components are NOT interchangeable between leg garters from other manufacturers.

Materials Required

Quantity	Description	Reference Number
As Required	Webbing, Nylon, Type VIII	MIL-W-4088 NIIN 00-261-8585
	or	
As Required	Webbing, Nylon, Type XIII	MIL-W-4088 NIIN 00-260-4585
	or	
As Required	Webbing, Nylon, Type XXVII	MIL-W-4088 NIIN 00-530-1489
As Required	Thread, Nylon, Type I Size FF	V-T-295 NIIN 00-267-3024
As Required	Thread, Nylon, Size E	V-T-295 NIIN 00-244-0609
As Required	Hook Tape, 1W, Type II, Class 1	MIL-F-21840 (CAGE 81349)
As Required	Pile Tape, 1W, Type II, Class 1	MIL-F-21840 (CAGE 81349)
2	Buckle Assembly	(Note 1)
1	Adjusting Ring Fitting	(Note 1)

Note: 1. Utilize the Buckle and Adjusting Ring Fitting from the discrepant Leg Garter to manufacture a new Leg Garter. If the parts are not available a new Leg Garter P/N 12429-1 must be ordered.

1. Sear the ends of a 28-inch length of nylon webbing. Ensure no sharp edges remain.

2. Insert webbing through buckle assemblies and crossbox stitch into position (figure 17-9) ensuring 4 5/8-inch fold back on back side of webbing.

NOTE

Stitching shall be Type 301, ASTM-D-6193, 8 to 11 stitches per inch using size FF nylon thread unless otherwise indicated.

3. At opposite end of webbing, box stitch 7/8-inch fold back on top side of webbing.

4. Sear ends of 11-inch length of one inch pile tape and sew to webbing using size E nylon thread 6 to 8 stitches per inch.

NOTE

All single needle stitching shall be back stitched not less than one half inch.

5. Sear ends of 2 1/2-inch length of one inch hook tape and sew to end of webbing as indicated using size E nylon thread 6 to 8 stitches per inch.

6. Reeve the end of the restraint garter through the adjusting ring fitting and position the fitting in the space on the garter between the hook and pile tapes.

7. Stamp P/N 12429-1 on back side of garter.

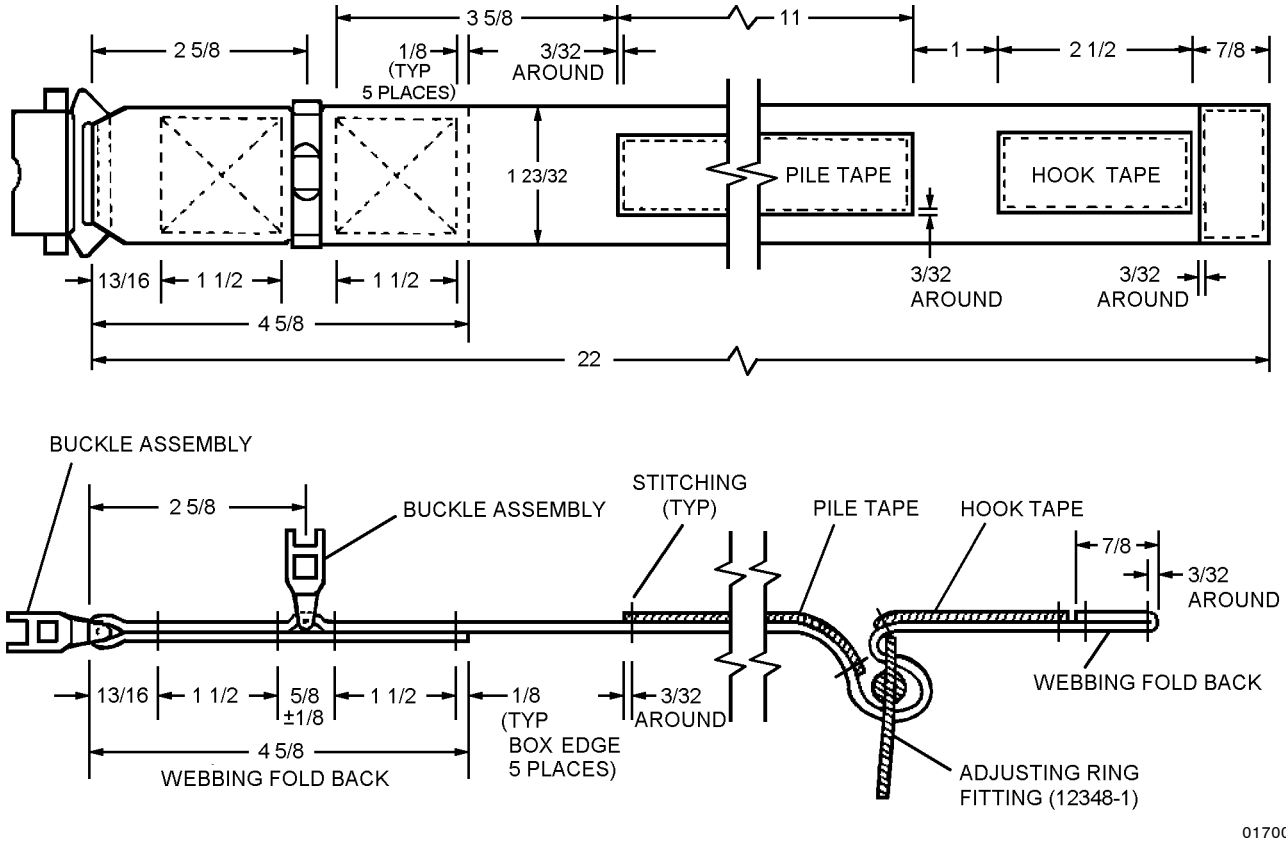

Figure 17-9. Leg Restraint Garter Assembly (P/N 12429-1) Fabrication

Section 17-3. Leg Restraint Garters, F/A-18C/D/E/F, F-14D and T-45A/C Aircraft with SJU-17/SJU-17A-Type Ejection Seats

17-44. DESCRIPTION.

17-45. The leg garters are adjustable to an aircrewmember's legs and are attached to the ejection seat by leg restraint lines to provide leg restraint during ejection.

17-46. CONFIGURATION.

17-47. A set of garters is made up of 2 upper garters and 2 lower garters. The garters attach and adjust with quick-release connectors and arrowhead adjusting buckles, which are located on the inside of the legs when worn. Pendant straps, forming part of each upper garter and worn at the back of the legs, terminate in quick-release connectors. On the lower garters, similar quick-release connectors are attached directly to the garters at the back of the legs. Operation of all four quick-release connectors allow the occupant to vacate the aircraft while wearing the leg garters.

17-48. APPLICATION.

17-49. These garters are designed for F/A-18C/D/E/F, F-14D, and T-45A/C aircraft aircrewmembers using NACES, SJU-17/SJU-17A type ejection seats.

17-50. MODIFICATIONS.

17-51. There are no modifications to the leg garters authorized at this time.

17-52. MAINTENANCE.

17-53. Organizational level shall perform place-in-service, Daily/Special Inspections, minor sewing repairs and cleaning. All other maintenance actions shall be performed by intermediate level maintenance, unless otherwise specified. Repair and fabrication instructions are listed in table 17-3.

17-54. INSPECTION.

17-55. Daily/Special Inspection. The garter shall be subjected to Daily/Special Inspections in conjunction with ejection seat inspections.

1. Webbing: cuts, tears, wear, contamination.

2. Stitching: loose, broken, worn, frayed.

3. Hardware: corrosion, cracking, security, damage.

Table 17-3. Leg Restraint Garters, Repairs/ Fabrications, F/A-18C/D/E/F, F-14D and T-45A/C

Description of Repair/Fabrications	Repair Paragraph Number	Fabricate Paragraph Number
Upper Strap Assy	17-58	17-62
Lower Strap Assy	17-58	17-63

17-56. Place-In-Service Inspection. Perform Daily/Special Inspection before the garter is placed in service. Refer to paragraph 17-55.

17-57. CLEANING. Clean webbing components as follows:

CAUTION

Do not machine wash or dry leg garters, possible damage to quick-release connector.

Materials Required

Quantity	Description	Reference Number
As Required	Detergent, General Purpose	MIL-D-16791 NIIN 00-282-9699
As Required	Cloth, Lint-Free, Type II	MIL-C-85043 NIIN 00-044-9281

1. Prepare detergent as required.

2. Apply solution to soiled area with spray or sponge.

3. Allow solution to remain on surface for a few minutes, then scrub with sponge or cloth.

4. Rinse surface thoroughly with water; wipe with cloth or sponge.

5. Repeat steps 1 thru 4 until material is clean.

6. Repeat step 4 until material is free of all solution.

7. Allow leg garter to air dry thoroughly.

8. Inspect webbing and hardware for damage and ensure quick-release connectors are operating and will secure when connected.

17-58. REPAIR. Organizational level repairs shall be limited to stitching re-attaching of hook and pile tape, overstitching loose/broken stitching and identification tags. Replacement of webbing shall be performed by intermediate or above maintenance.

17-59. DISASSEMBLY. Remove and retain RFI metal parts for reuse from non-RFI leg restraint webbing. Discard webbing.

CAUTION

Leg restraint replacement is limited to a one time hardware reuse.

17-60. FABRICATION. To fabricate the Leg Restraint Garters, proceed as follows:

NOTE

Fabrication of leg garters is authorized to meet operational commitments after supply inventories have been exhausted and an active requisition for replacement is documented. Locally manufactured leg garters shall be replaced during scheduled maintenance by OEM leg garters when they become available.

Materials required shall apply to upper/lower leg restraints and keepers as required.

All stitching shall be in accordance with ASTM-D-6193, Type 301 lockstitch using 6 to 8 stitches per inch with 3/4-inch back stitch or overstitching minimum unless otherwise stated.

Use an old set of leg restraint garters as a sample when manufacturing new leg restraint garters.

Materials Required

Quantity	Description	Reference Number
As Required	Webbing, Nylon, Type VIII	MIL-W-4088 NIIN 00-261-8585
As Required	Thread, Nylon, Size E, Olive Drab or Sage Green	V-T-295 NIIN 00-204-3884 or Equivalent
As Required	Fastener, Tape, Pile	MIL-F-21840 A-A-55126 NIIN 00-901-9716
As Required	Fastener, Tape, Hook	MIL-F-21840 A-A-55126 NIIN 00-901-9717
As Required	Tape, Textile, TY I, CL I Cotton, Natural Keeper	MIL-T-43566 NIIN 00-254-0188 or Equivalent (See paragraph 17-63)

17-61. Keeper Fabrication. (Figure 17-10)

1. Sear cut a 5-inch length of type VIII webbing.

2. Fold webbing in half and sew 3 rows of stitching 3/8 inch from the cut ends.

3. Fold webbing inside out so the cut ends are on the inside.

NOTE

After installing keeper onto the leg restraint garter, fold ends of webbing away from each other to lay flat.

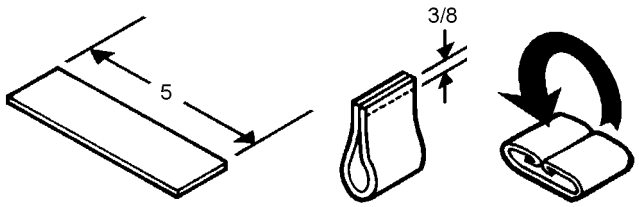

017010

Figure 17-10. Keeper Fabrication

17-62. Upper Strap Fabrication.

1. Sear cut 3 lengths of type VIII webbing, 28, 14 and 6 inches. Set 14 and 6-inch lengths aside (used in steps 14 and 20).

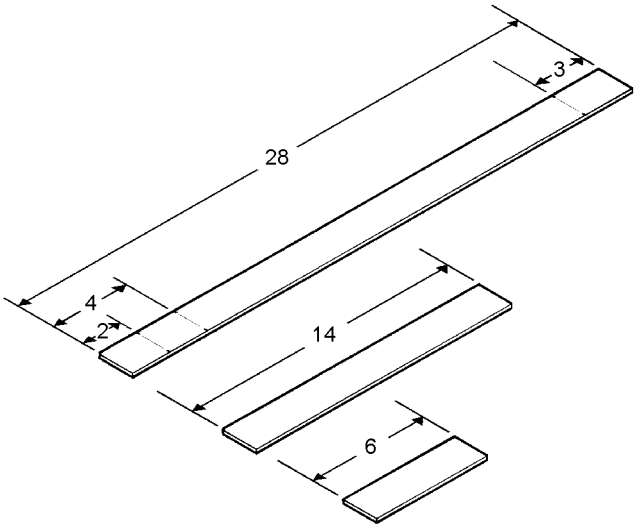

17p62s01

Step 1 - Para 17-62

2. Measure and mark one end 2 inches and 4 inches.

3. Measure from opposite end 3 inches and mark webbing.

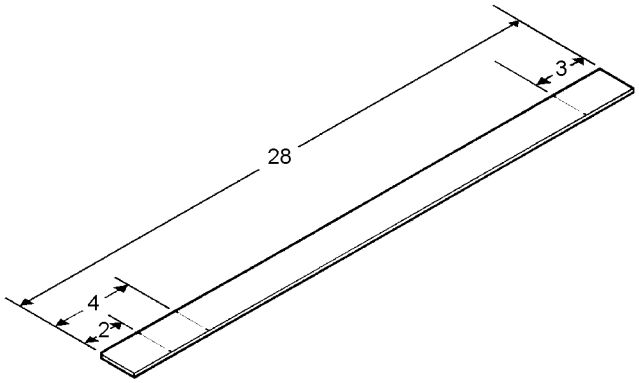

17p62s02

Steps 2 and 3 - Para 17-62

4. From end with 4-inch mark, install a female receiver to the 2-inch mark and fold to the 4-inch mark and sew a 1 3/8-inch by 1 inch cross boxstitch 1/8-inch from the edges of the webbing.

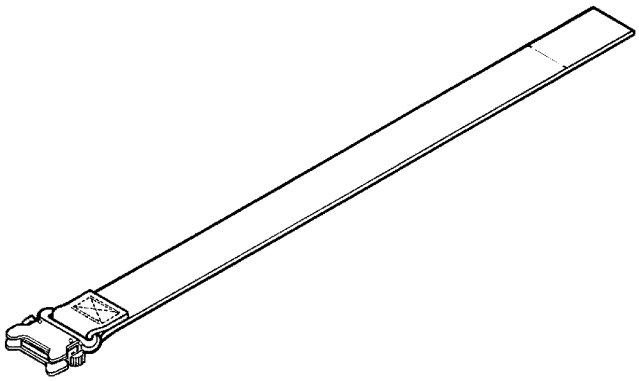

17p62s04

Step 4 - Para 17-62

5. Opposite end make 2, 1-inch folds to the 3-inch mark made in step 3.

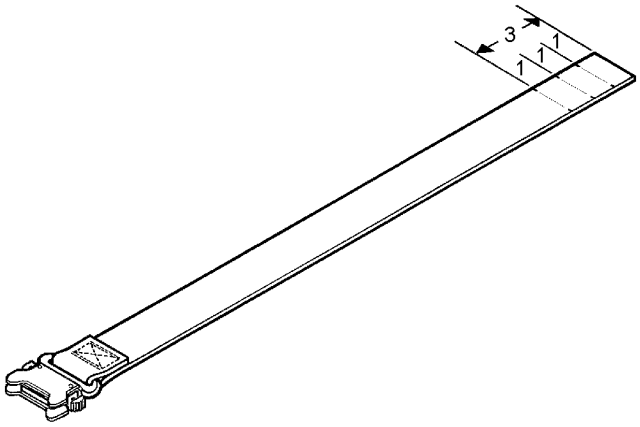

17p62s05

Step 5 - Para 17-62

6. Sew center of folded webbing using 3 rows of stitching.

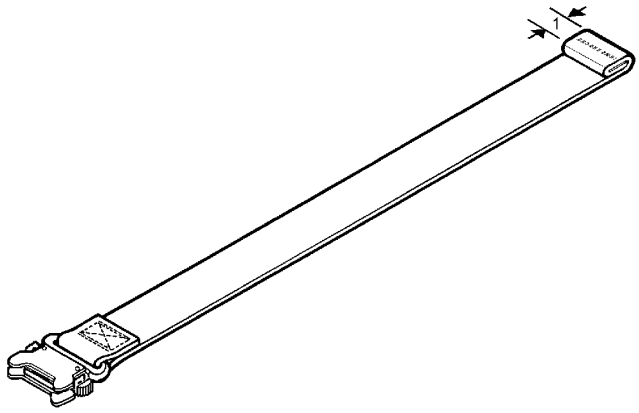

17p62s06

Step 6 - Para 17-62

7. Turn webbing with the folds facing the table, and measure 4 1/2 inches from the fold in the webbing with the female receiver, mark webbing.

8. Measure from the 4 1/2-inch mark, 15-inches and mark webbing.

9. Measure 3 1/2-inches from the 15-inch mark made in step 8.

10. Cut a 3 1/2-inch length of hook tape.

11. Place hook tape centered on webbing, 1 inch from the folded edge and sew hook tape to the webbing 1/8 inch from the hook tape edge.

12. Cut a 15-inch length of pile tape.

13. Place pile tape centered on webbing at the edge of the hook tape and sew pile tape to the webbing 1/8 inch from the pile tape edge.

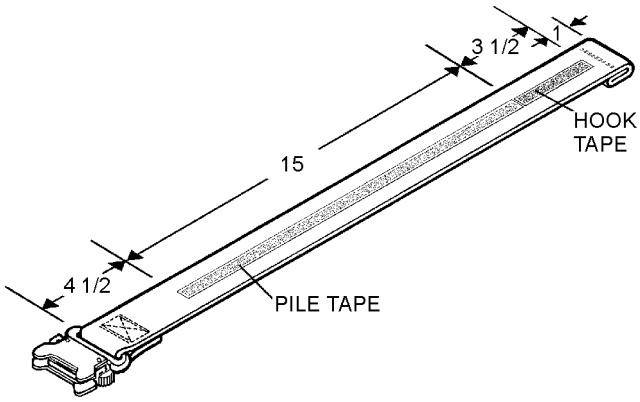

17p62s07

Steps 7 thru 13 - Para 17-62

14. With female receiver webbing on table, hook/pile tape facing up, lay the 14-inch webbing cut in step 1 under the webbing with 10 inches on one side and 2 inches on the other side.

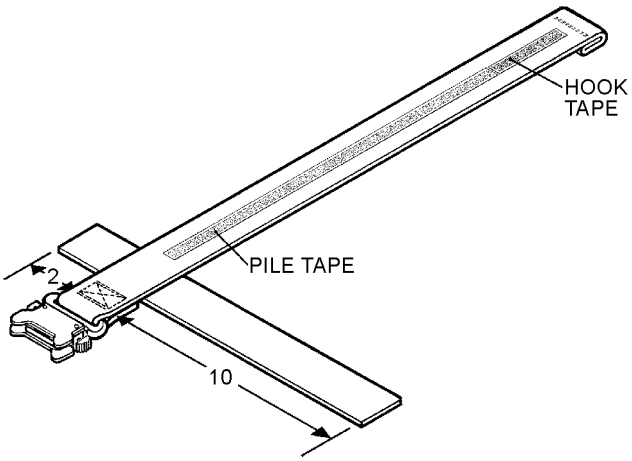

17p62s14

Step 14 - Para 17-62

15. Fold the 2-inch end over the female receiver webbing and sew a 1 3/8 x 1 inch cross boxstitch from the folded edge of the webbing.

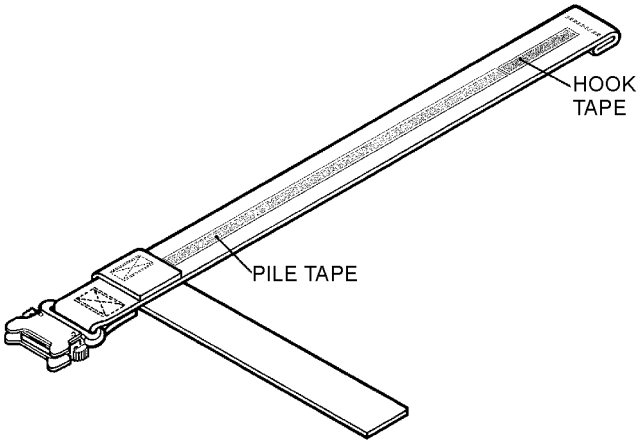

17p62s15

Step 15 - Para 17-62

16. Fold the 10-inch end over the female receiver webbing and sew a 1 1/8 x 1 inch cross boxstitch from the folded edge of the webbing.

17. Measure and mark webbing 4 1/4 inches from the cut edge of the webbing.

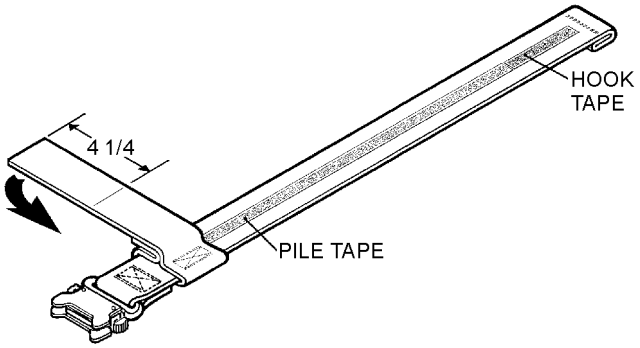

17p62s16

Steps 16 and 17 - Para 17-62

18. Install a female receiver over the webbing to the 4 1/4 inch mark made in step 17 and fold webbing so the fold goes over the loose end sewn in step 16.

19. Sew the folded webbing 1/2 inch from cut edge using a 1 3/8 x 1 1/2 inch cross boxstitch.

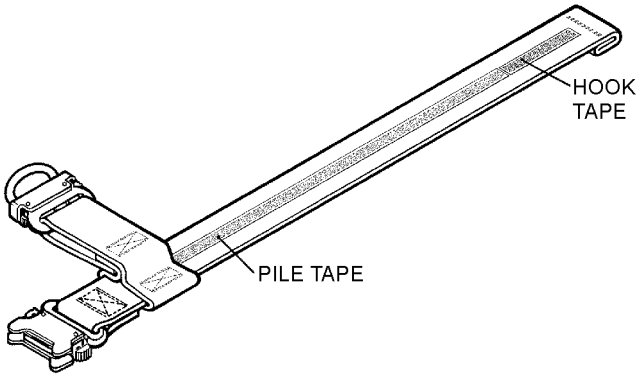

17p62s18

Steps 18 and 19 - Para 17-62

20. Using 6-inch length of webbing cut in step 1, fold outside edges in 2 inches overlapping webbing, creating 3 layers of webbing to be used as a spacer between the female receiver and inside cut edge of webbing.

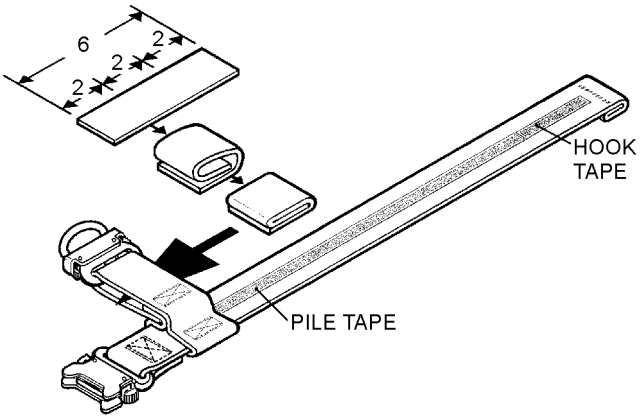

17p62s20

Step 20 - Para 17-62

21. Sew the 5 layers of webbing together using a 1 3/8 x 1 1/4 inch cross boxstitch.

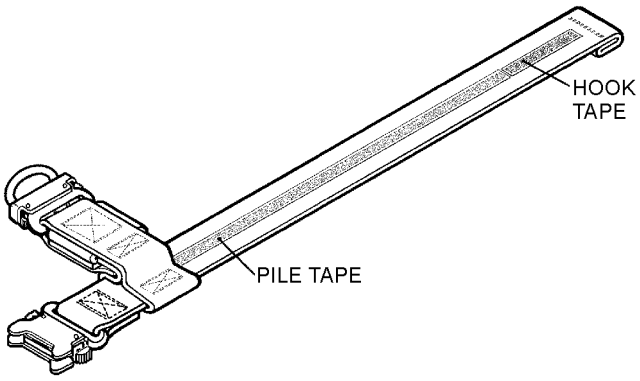

17p62s21

Step 21 - Para 17-62

NOTE

See figure 17-11 for steps 22 thru 27.

22. Cut 2 4-inch lengths of cotton webbing. Set 1 aside for use in step 26.

23. Using 3/4-inch stencil letters, mark “UPPER” on the top edge of webbing centered lengthwise.

24. Using 1/2-inch stencil letters, mark the webbing with the date of manufacture under the word “UPPER”.

25. Fold label webbing under 1/2 inch on both cut sides, and sew to either side of the short webbing, 1/8 inch from the edge of the label webbing.

26. Using 1/4-inch stencil letters, mark 4 inch webbing cut in step 22 with the following information: unit identification, organizational code, unit name.

EXAMPLE: UIC: N000421
ORG CODE: WA4
UNIT: AIMD WEBSTER FIELD

27. Fold label webbing under 1/2 inch on both cut sides, and sew to the opposite side of the short webbing with the “UPPER” label attached, 1/8 inch from the edge of the label webbing.

28. Install keeper over hook and pile end of webbing.

29. <u>Install male fitting with bend of fitting facing inward.</u>

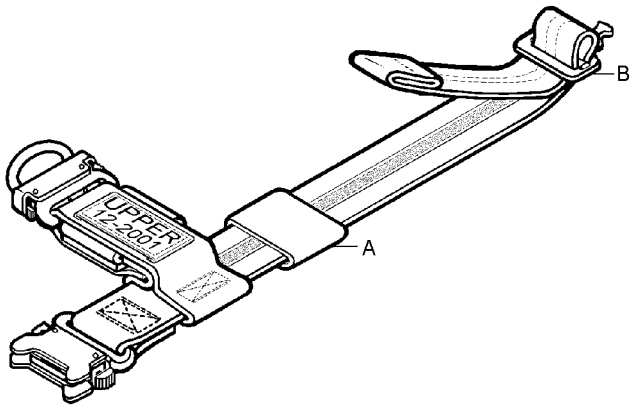

17p62s29

Step 29 - Para 17-62

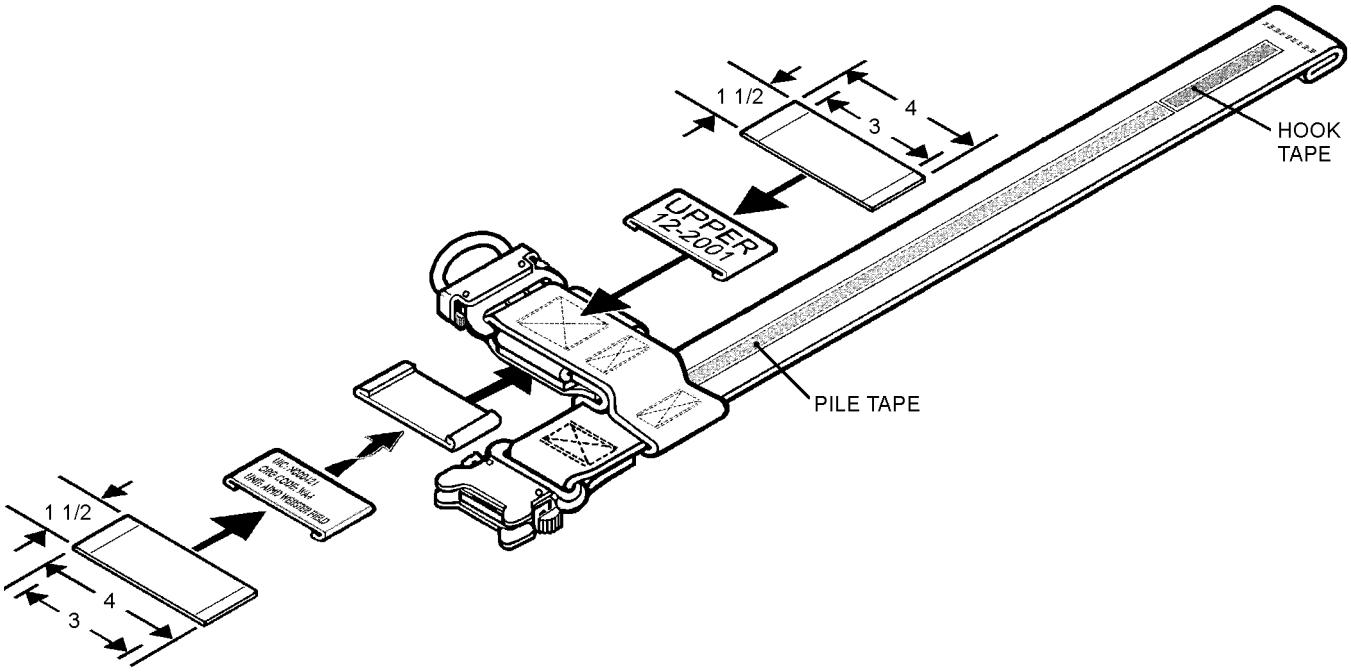

017011

Figure 17-11. Upper Leg Garter Fabrication

30. Slide keeper over loose end of webbing, securing the adjusting end webbing to the hook and pile tape.

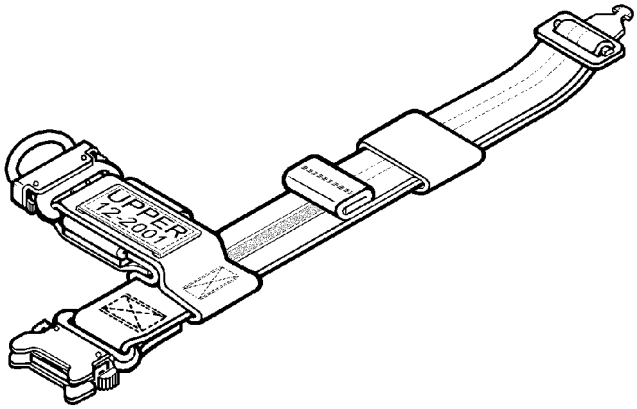

17p62s30

Step 30 - Para 17-62

17-63. LOWER STRAP FABRICATION.

1. Sear cut a 26 1/4-inch length of type VIII webbing.

2. Measure and mark one end 5 3/4 inches and 3 inches from the other end.

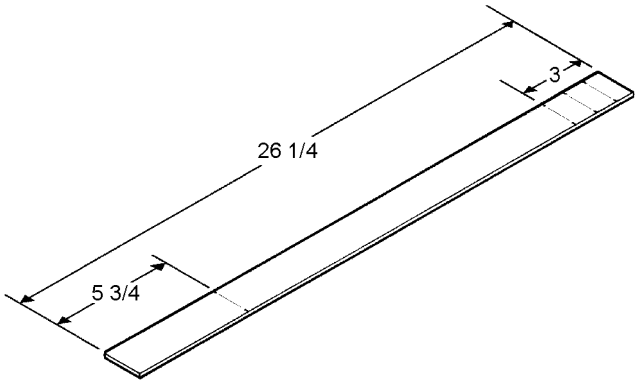

17p63s01

Steps 1 and 2 - Para 17-63

3. Make 2 1-inch folds to the 3-inch mark made in step 2.

4. Sew center of folded webbing using 3 rows of stitching.

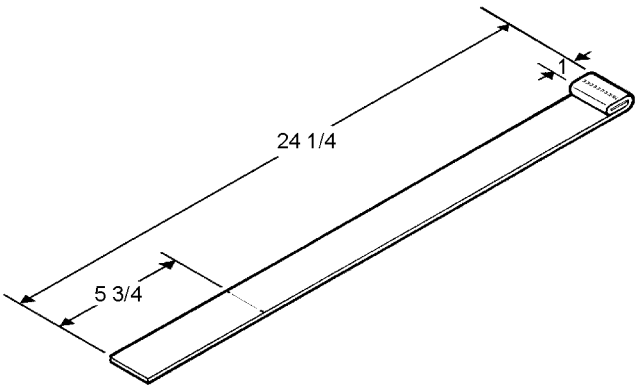

17p63s03

Steps 3 and 4 - Para 17-63

5. At the 5 3/4-inch end, install a female receiver and fold webbing to the 5 3/4-inch mark and sew a 3 inch by 1 3/8 inch cross boxstitch 1/8 inch from the edges of the webbing.

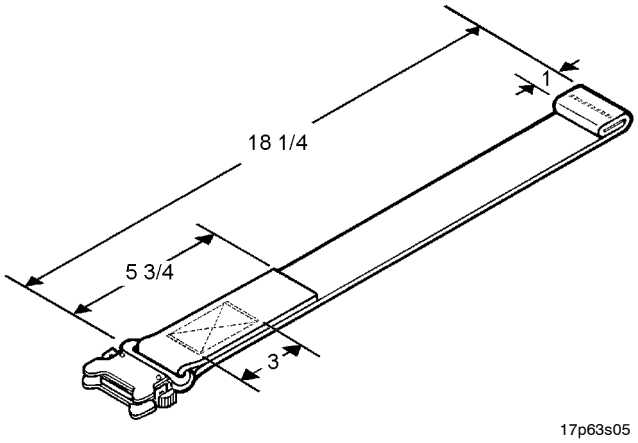

17p63s05

Step 5 - Para 17-63

6. Turn webbing with the folds facing the table.

7. From the end with the 1-inch fold, measure in 4 1/2 inches and mark webbing.

8. From the 4 1/2-inch mark made in step 7, measure 8 1/2 inches and mark webbing.

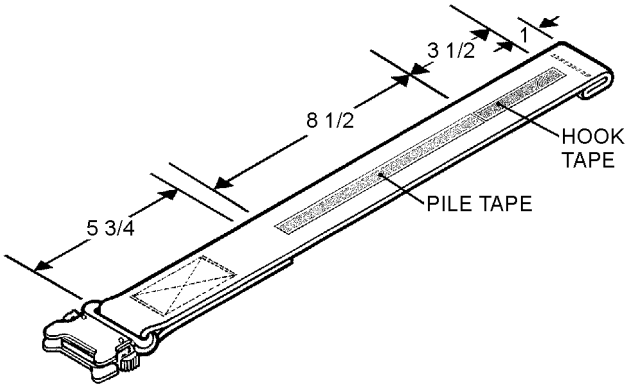

17p63s06

Steps 6 thru 8 - Para 17-63

9. Cut a 3 1/2-inch length of hook tape.

10. Place hook tape centered on webbing, 1 inch from the folded edge and sew hook tape to the webbing 1/8 inch from the hook tape edge.

11. Cut a 8 1/2-inch length of pile tape.

12. Place pile tape centered on webbing at the edge of the hook tape and sew pile tape to the webbing 1/8 inch from the pile tape edge.

13. With female receiver webbing on table, hook/pile tape facing up, lay a female receiver between the webbing fold created in step 5.

14. Sew webbing together using a 1 3/8 inch by 3/4 inch crossbox stitch.

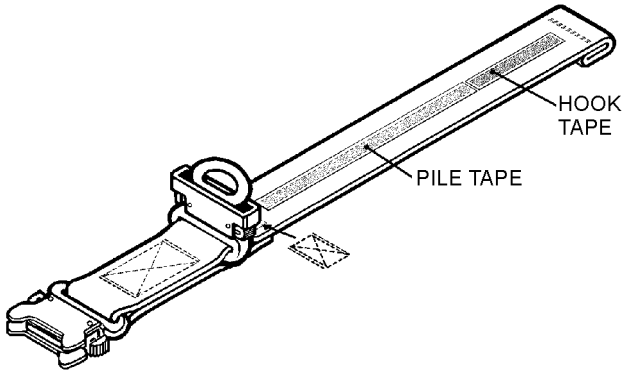

17p63s09

Steps 9 thru 14 - Para 17-63

15. Cut 2, 4-inch lengths of cotton webbing. Set 1 aside for use in step 20.

16. Using 3/4-inch stencil letters, mark “LOWER” on the top edge of cotton webbing centered lengthwise.

17. Using 1/2-inch stencil letters, mark the webbing with the date of manufacture under the word “LOWER”.

18. Fold label webbing under 1/2 inch on both cut sides, and sew to either side of the short webbing, 1/8 inch from the edge of the label webbing.

19. Using 1/4-inch stencil letters, mark 4-inch webbing cut in step 15 with the following information: unit identification, organizational code, unit name.

EXAMPLE: UIC: N000421
ORG CODE: WA4
UNIT: AIMD WEBSTER FIELD

20. Fold label webbing under 1/2 inch on both cut sides, and sew to the opposite side of the webbing where the “LOWER” label is attached, 1/8 inch from the edge of the label webbing.

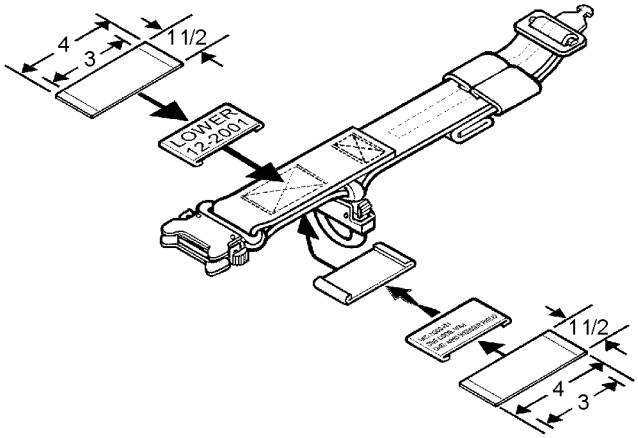

17p63s15

Steps 15 thru 20 - Para 17-63

21. Install keeper over hook and pile end of webbing.

22. <u>Install male fitting with bend of fitting facing inward.</u>

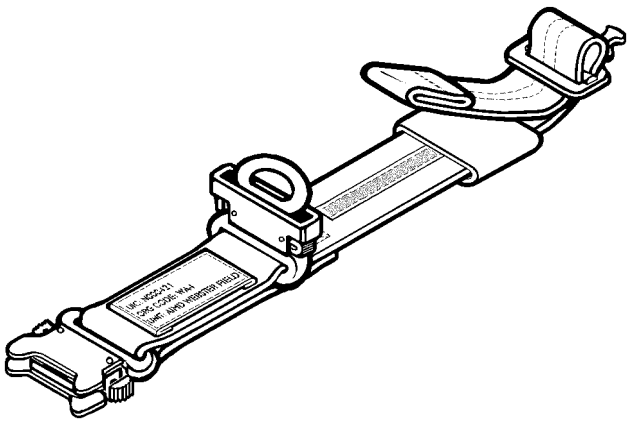

17p63s21

Steps 21 and 22 - Para 17-63

23. Slide keeper over loose end of webbing, securing the adjusting end webbing to the hook and pile tape.

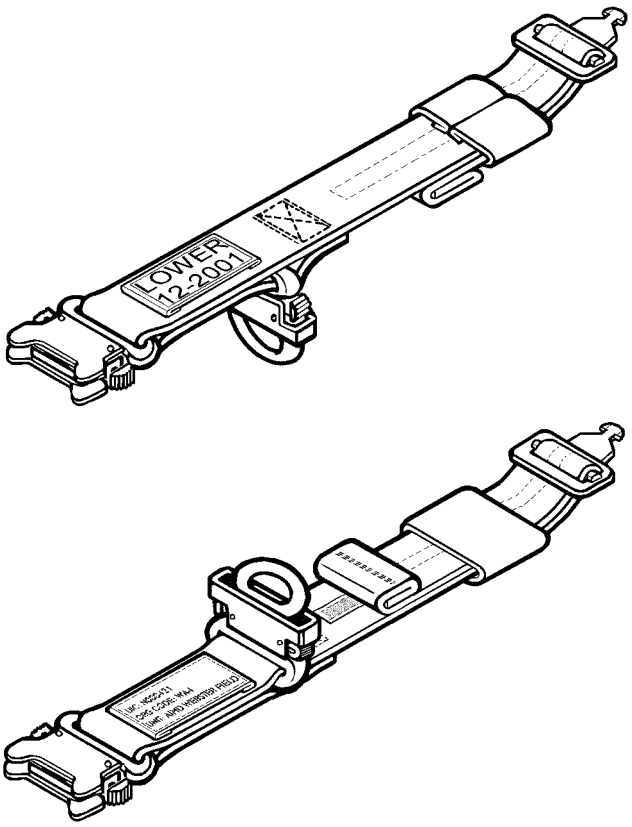

17p63s23

Step 23 - Para 17-63

THIS PAGE INTENTIONALLY LEFT BLANK.

APPENDIX A

RESERVED

THIS PAGE INTENTIONALLY LEFT BLANK.

APPENDIX B

THE METRIC SYSTEM AND METRIC UNIT CONVERSION CHARTS

The Metric System simply and logically coordinates the measurements of length, area, volume, and mass into one decimalized system. United States currency, with its unexcelled convenience, was the first large-scale national use of a decimal system. The ratio between the units of the series - dollars, dimes, cents, and mills - is ten. Additions and other numerical operations are simple. Calculations with metric units require no conversion from unit to unit, as for example between inches and feet or ounces and pounds.

In the Metric System there is one series of units for length, one for area, one for volume or capacity, and one for mass (tables B-1, B-3, B-5 and B-6).

LENGTH - The common metric units of length are the millimeter (mm) for small dimensions (tables B-2 and B-4), the centimeter (cm) for daily practical use, the meter (m) for expressing dimensions of larger objects and short distances and the kilometer (km) for longer distances. The centimeter is about four-tenths of an inch. The meter is about forty inches and the kilometer about six-tenths of a mile (figure B-1). When drawing to metric scale, engineering and product dimensions are in millimeters. Architectural drawings can be in millimeters or centimeters. On land surveys the unit is the meter. On maps the kilometer is the unit of measurement.

AREA - Small areas are usually measured in square centimeters (cm^2). In building and construction the square meter (m^2) is used and is about 20 percent larger than a square yard. The hectare (ha) is used for land surveys and is about 2.5 acres.

VOLUME - For volume the most convenient unit is the cubic decimeter (dm^3), referred to as the liter (l). The liter is slightly larger than the U.S. liquid quart but smaller than the U.S. dry quart and the British Imperial quart. The preferred unit for dispensing unit for dispensing drugs and for scientific work is the cubic centimeter (cm^3) or milliliter (ml) as it is also called. For measuring amounts of concrete and excavations the cubic meter (m^3) is used.

MASS - In pharmaceutical and scientific work the gram (g) is the most convenient unit. There are slightly less than 30 grams in one avoirdupois ounce. For most other uses the kilogram (kg) is convenient and is approximately 2.2 pounds. The metric ton (t), 1000 kg, is used for farm commodities, minerals, and large shipments. It is convenient that a liter of pure water at standard temperature and pressure has a mass of one kilogram (discrepancy less than one part in 10,000). This relationship makes it easy to determine the mass of any known volume of water or of any other liquid if its specific gravity is known.

TEMPERATURE - All countries using the Metric System of weights and measures also use the Celsius (°C) scale (formerly called centigrade) for ordinary measurement of temperature. On the Celsius scale pure water at standard atmospheric pressure freezes at 0° and boils at 100°. Normal human body temperature is 37°, while a comfortable room temperature is about 22°. The preferred temperature scale for engineering and physics is the kelvin (K) which has the same units as the Celsius and where the freezing point of pure water is 273.15 K.

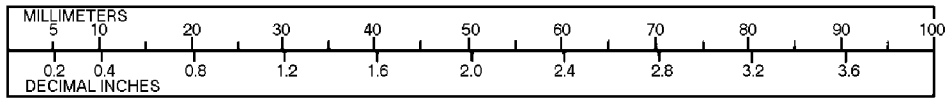

1 Millimeter = 0.03937 Inch Scale - 1 Centimeter = 5 Millimeters

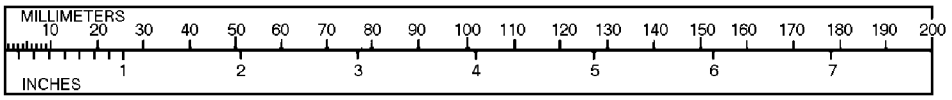

1 Inch = 25.4 Millimeters Scale - 1 Centimeter = 10 Millimeters

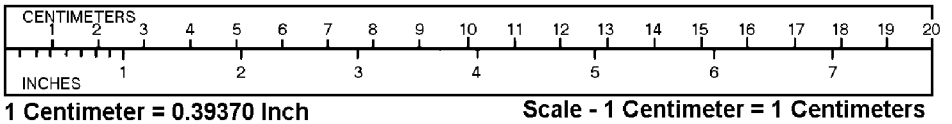

1 Centimeter = 0.39370 Inch Scale - 1 Centimeter = 1 Centimeters

1 Inch = 2.54 Centimeters

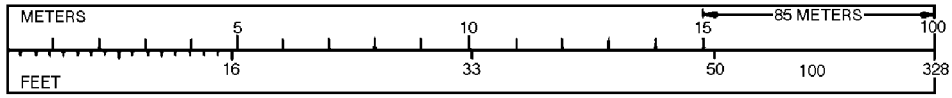

Scale - 1 Centimeter = 1 Meter 1 Foot = 0.3048 Meter

1 Meter = 3.28083 Feet (39.37 Inches - Act of Congress 1866)

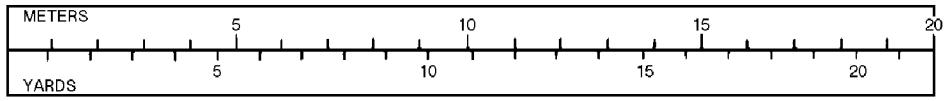

1 Meter = 1.09361 Yards 1 Yard = 0.9144 Meter Scale - 1 Centimeter = 1 Meter

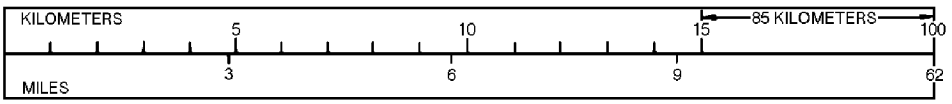

1 Kilometer = 0.62137 Mile Scale - 1 Centimeter = 1 Kilometer

Mile = 1.6093 Kilometers

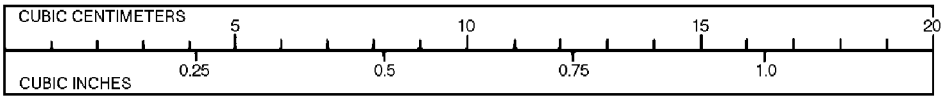

1 Cubic Centimeter = 0.061 Cubic Inch Scale - 1 Centimeter = 1 Cubic Centimeter

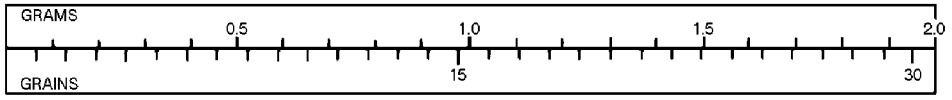

1 Gram = 15.4324 Grains Scale - 1 Centimeter = 0.1 Gram

b001-1

Figure B-1. Reference Conversion Charts (Sheet 1 of 2)

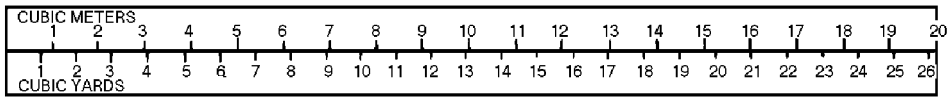

1 Cubic Meter = 1.30795 Cubic meter **Scale - 1 Centimeter = 1 Cubic Meter**

1 Cubic Yard = 0.76455 Cubic meter

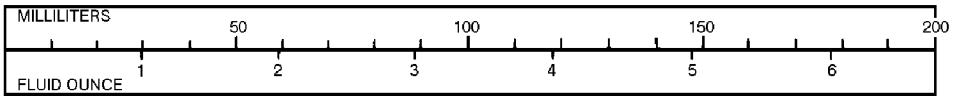

1 Milliliter = 0.03381 Fluid Ounce **Scale - 1 Centimeter = 10 Milliliter**

1 Fluid Ounce = 29.57 Milliliters

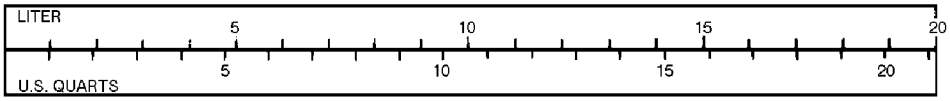

1 Liter = 1.0567 U.S. Quarts 1 U.S. Quart = 0.9463 Liter Scale - 1 Centimeter = 1 Liter

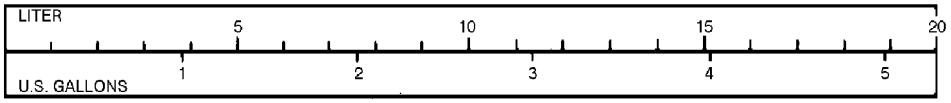

1 Liter = 0.26418 U.S. Gallon **Scale - 1 Centimeter = 1 Liter**

1 U.S. Gallon = 3.7853 Liters

1 Avoirdupois ounce = 28.3495 Grams **Scale - 1 Centimeter = 5 Grams**

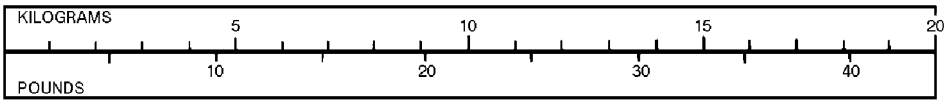

1 Kilogram = 2.2045 Pounds **Scale - 1 Centimeter = 1 Kilogram**

1 Pound = 0.45359 Kilogram

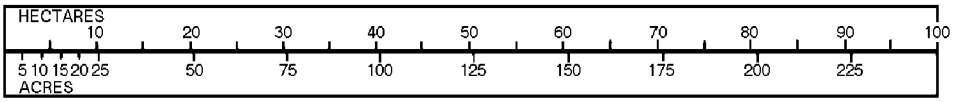

1 Hectare = 2.47105 Acres **Scale - 1 Centimeter = 5 Hectares**

1 Acres = 0.40489 Hectares **40 Acres = 16.19 Hectares**

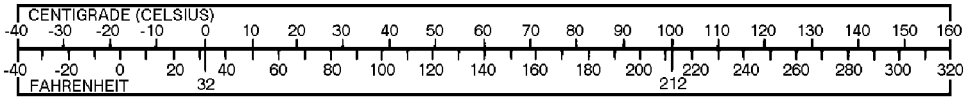

Fahrenheit = 9/5 Centigrade plus 32 **Scale - 1 Centigrade = 10° Centigrade**

Centigrade = Fahrenheit minus 32 x 5/9

b001-2

Figure B-1. Reference Conversion Charts (Sheet 2 of 2)

TABLE B-1. SYMBOLS AND RELATIONSHIPS OF METRIC UNITS

Quantity	Unit (Note 2)	Symbol	Relationship Of Units
Length	millimeter centimeter decimeter meter (Note 1) kilometer	mm cm dm m km	1 mm = 0.001 m 1 cm = 10 mm 1 dm = 10 cm 1 m = 100 cm 1 km = 1000 m
Area	square centimeter square decimeter square meter (Note 1) are hectare square kilometer	cm^2 dm^2 m^2 a ha km^2	1 cm^2 = 100 mm^2 1 dm^2 = 100 cm^2 1 m^2 = 100 dm^2 1 a = 100 m^2 1 ha = 100 a 1 km^2 = 100 ha
Volume	{ cubic centimeter { millimeter { cubic decimeter { liter cubic meter (Note 1)	cm^3 ml dm^3 l m^3	1 cm^3 } = 0.001 l 1 ml } 1 dm^3 } = 1000 ml 1 l } 1 m^3 = 1000 l
Mass*	milligram gram kilogram (Note 1) metric ton	mg g kg t	1 mg = 0.001 g 1 g = 1000 mg 1 kg = 1000 g 1 t = 1000 kg

*Mass is the quantity of matter. Weight is a force Earth's attraction for a given mass. Generally the term mass is meant when we use weight.

Notes: 1. The underlined units in this table are basic or derived units of the International System of Units (SI).

2. The three main units; meter liter and gram can be changed to more convenient sized units for specific purposes by means of several well known prefixes. Milli means 1/1000. Centi means 1/100. Deci means 1/10. Kilo means 1000. One merely learns the main units and the value of the most commonly used prefixes. The symbols for metric units are the same for single and plural amounts and are not followed by a period. Rates are usually shown by use of the slash as in m/s.

Table B-2. Inches to Millimeters Conversion Chart

Inch	mm	Inch	mm	Inch	mm	Inch	mm	Inch	mm	Inch	mm	Inch	mm	Inch	mm	Inch	mm	Inch	mm
.001	0.0254	.051	1.2954	.101	2.5654	.151	3.8354	.201	5.1054	.251	6.3754	.301	7.6454	.351	8.9154	.401	10.1854	.451	11.4554
.002	0.0508	.052	1.3208	.102	2.5908	.152	3.8608	.202	5.1308	.252	6.4008	.302	7.6708	.352	8.9408	.402	10.2108	.452	11.4808
.003	0.0762	.053	1.3462	.103	2.6162	.153	3.8862	.203	5.1562	.253	6.4262	.303	7.6962	.353	8.9662	.403	10.2362	.453	11.5062
.004	0.1016	.054	1.3716	.104	2.6416	.154	3.9116	.204	5.1816	.254	6.4516	.304	7.7216	.354	8.9916	.404	10.2616	.454	11.5316
.005	0.1270	.055	1.3970	.105	2.6670	.155	3.9370	.205	5.2070	.255	6.4770	.305	7.7470	.355	9.0170	.405	10.2870	.455	11.5570
.006	0.1524	.056	1.4224	.106	2.6924	.156	3.9624	.206	5.2324	.256	6.5024	.306	7.7724	.356	9.0424	.406	10.3124	.456	11.5824
.007	0.1778	.057	1.4478	.107	2.7178	.157	3.9878	.207	5.2578	.257	6.5278	.307	7.7978	.357	9.0678	.407	10.3378	.457	11.6078
.008	0.2032	.058	1.4732	.108	2.7432	.158	4.0132	.208	5.2832	.258	6.5532	.308	7.8232	.358	9.0932	.408	10.3632	.458	11.6332
.009	0.2286	.059	1.4986	.109	2.7686	.159	4.0386	.209	5.3086	.259	6.5786	.309	7.8486	.359	9.1186	.409	10.3886	.459	11.6586
.010	0.2540	.060	1.5240	.110	2.7940	.160	4.0640	.210	5.3340	.260	6.6040	.310	7.8740	.360	9.1440	.410	10.4140	.460	11.6840
.011	0.2794	.061	1.5494	.111	2.8194	.161	4.0894	.211	5.3594	.261	6.6294	.311	7.8994	.361	9.1694	.411	10.4394	.461	11.7094
.012	0.3048	.062	1.5748	.112	2.8448	.162	4.1148	.212	5.3848	.262	6.6548	.312	7.9248	.362	9.1948	.412	10.4648	.462	11.7348
.013	0.3302	.063	1.6002	.113	2.8702	.163	4.1402	.213	5.4102	.263	6.6802	.313	7.9502	.363	9.2202	.413	10.4902	.463	11.7602
.014	0.3556	.064	1.6256	.114	2.8956	.164	4.1656	.214	5.4356	.264	6.7056	.314	7.9756	.364	9.2456	.414	10.5156	.464	11.7856
.015	0.3810	.065	1.6510	.115	2.9210	.165	4.1910	.215	5.4610	.265	6.7310	.315	8.0010	.365	9.2710	.415	10.5410	.465	11.8110
.016	0.4064	.066	1.6764	.116	2.9464	.166	4.2164	.216	5.4864	.266	6.7564	.316	8.0264	.366	9.2964	.416	10.5664	.466	11.8364
.017	0.4318	.067	1.7018	.117	2.9718	.167	4.2418	.217	5.5118	.267	6.7818	.317	8.0518	.367	9.3218	.417	10.5918	.467	11.8618
.018	0.4572	.068	1.7272	.118	2.9972	.168	4.2672	.218	5.5372	.268	6.8072	.318	8.0772	.368	9.3472	.418	10.6172	.468	11.8872
.019	0.4826	.069	1.7526	.119	3.0226	.169	4.2926	.219	5.5626	.269	6.8326	.319	8.1026	.369	9.3726	.419	10.6426	.469	11.9126
.020	0.5080	.070	1.7780	.120	3.0480	.170	4.3180	.220	5.5880	.270	6.8580	.320	8.1280	.370	9.3980	.420	10.6680	.470	11.9380
.021	0.5334	.071	1.8034	.121	3.0734	.171	4.3434	.221	5.6134	.271	6.8834	.321	8.1534	.371	9.4234	.421	10.6934	.471	11.9634
.022	0.5588	.072	1.8288	.122	3.0988	.172	4.3688	.222	5.6388	.272	6.9088	.322	8.1788	.372	9.4488	.422	10.7188	.472	11.9888
.023	0.5842	.073	1.8542	.123	3.1242	.173	4.3942	.223	5.6642	.273	6.9342	.323	8.2042	.373	9.4742	.423	10.7442	.473	12.0142
.024	0.6096	.074	1.8796	.124	3.1496	.174	4.4196	.224	5.6896	.274	6.9596	.324	8.2296	.374	9.4996	.424	10.7696	.474	12.0396
.025	0.6350	.075	1.9050	.125	3.1750	.175	4.4450	.225	5.7150	.275	6.9850	.325	8.2550	.375	9.5250	.425	10.7950	.475	12.0650
.026	0.6604	.076	1.9304	.126	3.2004	.176	4.4704	.226	5.7404	.276	7.0104	.326	8.2804	.376	9.5504	.426	10.8204	.476	12.0904
.027	0.6858	.077	1.9558	.127	3.2258	.177	4.4958	.227	5.7658	.277	7.0358	.327	8.3058	.377	9.5758	.427	10.8458	.477	12.1158
.028	0.7112	.078	1.9812	.128	3.2512	.178	4.5212	.228	5.7912	.278	7.0612	.328	8.3312	.378	9.6012	.428	10.8712	.478	12.1412
.029	0.7366	.079	2.0066	.129	3.2766	.179	4.5466	.229	5.8166	.279	7.0366	.329	8.3566	.379	9.6266	.429	10.8966	.479	12.1666
.030	0.7620	.080	2.0320	.130	3.3020	.180	4.5720	.230	5.8420	.280	7.1120	.330	8.3820	.380	9.6520	.430	10.9220	.480	12.1920
.031	0.7874	.081	2.0574	.131	3.3274	.181	4.5974	.231	5.8674	.281	7.1374	.331	8.4074	.381	9.6774	.431	10.9474	.481	12.2174
.032	0.8128	.082	2.0828	.132	3.3528	.182	4.6228	.232	5.8928	.282	7.1628	.332	8.4328	.382	9.7028	.432	10.9728	.482	12.2428
.033	0.8382	.083	2.1082	.133	3.3782	.183	4.6482	.233	5.9182	.283	7.1882	.333	8.4582	.383	9.7282	.433	10.9982	.483	12.2682
.034	0.8636	.084	2.1336	.134	3.4036	.184	4.6736	.234	5.9436	.284	7.2136	.334	8.4836	.384	9.7536	.434	11.0236	.484	12.2936
.035	0.8890	.085	2.1590	.135	3.4290	.185	4.6990	.235	5.9690	.285	7.2390	.335	8.5090	.385	9.7790	.435	11.0490	.485	12.3190
.036	0.9144	.086	2.1844	.136	3.4544	.186	4.7244	.236	5.9944	.286	7.2644	.336	8.5344	.386	9.8044	.436	11.0744	.486	12.3444
.037	0.9398	.087	2.2098	.137	3.4798	.187	4.7498	.237	6.0198	.287	7.2898	.337	8.5598	.387	9.8298	.437	11.0998	.487	12.3698
.038	0.9652	.088	2.2352	.138	3.5052	.188	4.7752	.238	6.0452	.288	7.3152	.338	8.5852	.388	9.8552	.438	11.1252	.488	12.3952
.039	0.9906	.089	2.2606	.139	3.5306	.189	4.8006	.239	6.0706	.289	7.3406	.339	8.6106	.389	9.8806	.439	11.1506	.489	12.4206
.040	1.0160	.090	2.2860	.140	3.5560	.190	4.8260	.240	6.0960	.290	7.3660	.340	8.6360	.390	9.9060	.440	11.1760	.490	12.4460
.041	1.0414	.091	2.3114	.141	3.5814	.191	4.8514	.241	6.1214	.291	7.3914	.341	8.6614	.391	9.9314	.441	11.2014	.491	12.4714
.042	1.0668	.092	2.3368	.142	3.6068	.192	4.8768	.242	6.1468	.292	7.4168	.342	8.6868	.392	9.9568	.442	11.2268	.492	12.4968
.043	1.0922	.093	2.3622	.143	3.6322	.193	4.9022	.243	6.1722	.293	7.4422	.343	8.7122	.393	9.9822	.443	11.2522	.493	12.5222
.044	1.1176	.094	2.3876	.144	3.6576	.194	4.9276	.244	6.1976	.294	7.4676	.344	8.7376	.394	10.0076	.444	11.2776	.494	12.5476
.045	1.1430	.095	2.4130	.145	3.6830	.195	4.9530	.245	6.2230	.295	7.4930	.345	8.7630	.395	10.0330	.445	11.3030	.495	12.5730
.046	1.1684	.096	2.4384	.146	3.7084	.196	4.9784	.246	6.2484	.296	7.5184	.346	8.7884	.396	10.0584	.446	11.3284	.496	12.5984
.047	1.1938	.097	2.4638	.147	3.7338	.197	5.0038	.247	6.2738	.297	7.5438	.347	8.8138	.397	10.0838	.447	11.3538	.497	12.6238
.048	1.2192	.098	2.4892	.148	3.7592	.198	5.0292	.248	6.2992	.298	7.5692	.348	8.8392	.398	10.1092	.448	11.3792	.498	12.6492
.049	1.2446	.099	2.5146	.149	3.7846	.199	5.0546	.249	6.3246	.299	7.5946	.349	8.8646	.399	10.1346	.449	11.4046	.499	12.6746
.050	1.2700	.100	2.5400	.150	3.8100	.200	5.0800	.250	6.3500	.300	7.6200	.350	8.8900	.400	10.1600	.450	11.4300	.500	12.7000

Table B-3. International System of Units (SI)

Quantity	Unit	Symbol
Elemental units		
Length	meter	m
Mass	kilogram	kg
Time	second	s
Electric current	ampere	A
Temperature	degree Kelvin	°K
Luminous intensity	candela	cd
Supplementary units		
Plane angle	radian	rad
Solid angle	steradian	sr
Derived units		
Area	square meter	m^2
Volume	cubic meter	m^3
Frequency	hertz	Hz (s^{-1})
Density	kilogram per cubic meter	kg/m^3
Velocity	meter per second	m/s
Angular velocity	radian per second	rad/s
Acceleration	meter per second squared	m/s^2
Angular acceleration	radian per second squared	rad/s^2
Force	newton	N (kg m/s^2)
Pressure	newton per square meter	N/m^2
Kinematic viscosity	square meter per second	m^2/s
Dynamic viscosity	newton-second per square meter	N s/m^2
Work, energy, quantity of heat	joule	J (N m)
Power	watt	W (J/s)
Electric charge	coulomb	C (A s)
Voltage, potential difference, electrotive force	volt	V (W/A)
Electric field strength	volt per meter	V/m
Electric resistance	ohm	Ω (V/A)
Electric capacitance	farad	F (A s/V)
Magnetic flux	weber	Wb (V s)
Inductance	henry	H (V s/A)
Magnetic flux density	tesla	T (Wb/m^2)
Magnetic field strength	ampere per meter	A/m
Magnetomotive force	ampere	A
Luminous flux	lumen	lm (cd sr)
Luminance	candela per square meter	cd/m^2
Illumination	lux	lx (lm/m^2)

USE OF TABLES

Following are step by step directions for the solution to an example conversion problem. The example is: Convert 12 3/4 inches to centimeters.

1. Convert all fractions to decimals. (Refer to table B-4.)

   12 3/4 = 12.75

2. Refer to table B-5 and find the column for the unit which you have. This would be the column labeled "INCHES" in the "Length" table.

3. Locate the numeral 1 in the column labeled "INCHES."

4. Locate the column labeled "CENTIMETERS."

5. Read the number in the CENTIMETERS column that is in direct line with the numeral 1 located in the INCHES column.

   Read 2.540

6. Multiply the number of inches of this example by the conversion factor to obtain the number of centimeters.

   2.540 times 12.75 equals 32.385

7. Round off the answer to not over four significant figures (four numbers counting from the first non-zero number on the left. Fewer significant figures may be used depending on the accuracy of measurement and the tolerances allowed. For most work in this manual, centimeters would be expressed as three significant figures.

   12 3/4 inches = 32.4 centimeters

Table B-4. Fraction/Decimal/Millimeter Conversion Chart

Fractions	Dec Equiv	mm Equiv	Fractions	Dec Equiv	mm Equiv
1/64	0.01562	0.397	33/64	0.515625	13.097
1/32	0.03125	0.794	17/32	0.53125	13.494
3/64	0.04688	1.191	35/64	0.546875	13.891
1/16	0.0625	1.588	9/16	0.5625	14.288
5/64	0.078125	1.984	37/64	0.578125	14.684
3/32	0.09375	2.381	19/32	0.59375	15.081
7/64	0.109375	2.778	39/64	0.609375	15.478
1/8	0.125	3.175	5/8	0.625	15.875
9/64	0.140625	3.572	41/64	0.640625	16.272
5/32	0.15625	3.969	21/32	0.65625	16.669
11/64	0.171875	4.366	43/64	0.671875	17.066
3/16	0.1875	4.762	11/16	0.6875	17.462
13/64	0.203125	5.159	45/64	0.703125	17.859
7/32	0.21875	5.556	23/32	0.71875	18.256
15/64	0.234375	5.953	47/64	0.734375	18.653
1/4	0.25	6.350	3/4	0.75	19.050
17/64	0.265625	6.747	49/64	0.765625	19.447
9/32	0.28/125	7.144	25/32	0.78125	19.844
19/64	0.296875	7.541	51/64	0.796875	20.241
5/16	0.3125	7.938	13/16	0.8125	20.638
21/64	0.328125	8.334	53/64	0.828125	21.034
11/32	0.34375	8.731	27/32	0.84375	21.431
23/64	0.359375	9.128	55/64	0.859375	21.828
3/8	0.375	9.525	7/8	0.875	22.225
25/64	0.390625	9.922	57/64	0.890625	22.622
13/32	0.40625	10.319	29/32	0.90625	23.019
27/64	0.421875	10.716	59/64	0.921875	23.416
7/16	0.4375	11.112	15/16	0.9375	23.812
29/64	0.453125	11.509	61/64	0.953125	24.209
15/32	0.46875	11.906	31/32	0.96875	24.606
31/64	0.484375	12.303	63/64	0.984375	25.003
1/2	0.5	12.700	1	1.0	25.400

Table B-5. Metric Unit Conversions

Length

Millimeters	Centimeters	Inches	Feet	Yards	Meters
1.0	0.1000	0.03937	0.003281	0.001094	0.001000
10.0	1.0	0.3937	0.03281	0.01094	0.01000
25.40	2.540	1.0	0.08333	0.02778	0.0254
304.8	30.48	12.0	1.0	0.3333	0.3048
914.4	91.44	36.0	3.000	1.0	0.9144
1000.0	100.0	39.37	3.281	1.094	1.0

Weight

Grams	Kilograms	Grains	Ounces Avoirdupois	Pounds Avoirdupois
1000.0	1.0	15,432.0	35.27	2.205
1.0	0.0010	15,432	0.03527	0.002205
0.06480	0.00006480	1.0	0.002286	0.0001429
28.35	0.02835	437.5	1.0	0.0625
453.6	0.4536	7,000.0	16.0	1.0

Velocity

Meters/Sec	Kilometers/Hr	Feet/Sec	Miles/Hr	Knots
1.0	3.600	3.281	2.237	1.944
0.2778	1.0	0.9113	0.6214	0.5400
0.3048	1.097	1.0	0.6818	0.5925
0.4470	1.609	1.467	1.0	0.8690
0.5144	1.852	1.688	1.1511	1.0

Pressure

Bars (Mega-baryes)	Kilograms/ square cm	Pounds/ square inch	Atmos-pheres	Columns of Mercury (0°C)		Columns of Water (15°C)		
				Meters	Inches	Meters	Inches	Feet
1.0	1.0197	14.50	0.9869	0.7501	29.53	10.21	401.8	33.49
0.9807	1.0	14.22	0.9678	0.7356	28.96	10.01	394.1	32.84
0.06895	0.07031	1.0	0.06805	0.05171	2.036	0.7037	27.70	2.309
1.0133	1.0332	14.70	1.0	0.7600	29.92	10.34	407.1	33.93
1.3332	1.3595	19.34	1.316	1.0	39.37	13.61	535.7	44.64
0.03386	0.03453	0.4912	0.03342	0.02540	1.0	0.3456	13.61	1.134
0.09798	0.09991	1.421	0.09670	0.07349	2.893	1.0	39.37	3.281
0.002489	0.002538	0.03609	0.002456	0.001867	0.0739	0.02540	1.0	0.08333
0.02986	0.03045	0.4331	0.02947	0.02240	0.8819	0.3048	12.0	1.0

Area

Square Meters	Square Centimeters	Square Inches	Square Feet	Square Yards
1.0	10,000.0	1,550.0	10.76	1.196
0.0001	1.0	0.1550	0.001076	0.0001196
0.0006452	6,452.0	1.0	0.006944	0.0007716
0.9290	929.0	144.0	1.0	0.1111
0.8361	8,361.0	1,296.0	9.0000	1.0

Volume

Cubic Inches	Cubic Feet	Cubic Yards	Gallons (U.S.)	Quarts (U.S.)	Liters (Cubic Decimeters)	Cubic Meters	Milliliters (Cubic Centimeters)
1.0	0.0005787	0.00002143	0.004329	0.01732	0.01639	0.00001639	16.39
1,728.0	1.0	0.03704	7.481	29.92	28.32	0.02832	28,320
46,656.0	27.0	1.0	202.2	807.9	764.6	0.7646	764,600
231.0	0.1337	0.004951	1.0	4.000	3.785	0.003785	3,785
57.75	0.03342	0.001238	0.2500	1.0	0.9464	0.0009464	946.4
61.02	0.03531	0.001308	0.2642	1.057	1.0	0.001	1,000
61020	353.1	1.308	264.2	1057	1000.0	1	1,000,000
0.06102	0.00003531	0.000001308	0.0002642	0.001057	0.001	0.000001	1

Table B-6. Alphabetical Index of Metric Unit Conversions

TO CONVERT	INTO	MULTIPLY BY
	A	
Abcoulomb	Statcoulombs	2.998×10^{10}
Acre	Sq. chain (Gunters)	10
Acre	Rods	160
Acre	Square links (Gunters)	1×10^{5}
Acre	Hectare or sq.hectometer	0.4047
acres	sq feet	43,560.0
acres	sq meters	4,047.
acres	sq miles	1.562×10^{-3}
acres	sq yards	4,840.
acre-feet	cu feet	43,560.0
acre-feet	gallons	3.259×10^{4}
amperes/sq cm	amps/sq in.	6.452
amperes/sq cm	amps/sq meter	10^{4}
amperes/sq in.	amps/sq cm	0.1550
amperes/sq in.	amps/sq meter	1,550.0
amperes/sq meter	amps/sq cm	10^{-4}
amperes/sq meter	amps/sq in.	6.452×10^{-4}
ampere-hours	coulombs	3,600.0
ampere-hours	faradays	0.03731
ampere-turns	gilberts	1.257
ampere turns/cm	amp-turns/in.	2.540
ampere-turns/cm	amp-turns/meter	100.0
ampere-turns/cm	gilberts/cm	1.257
ampere-turns/in.	amp-turns/cm	0.3937
ampere-turns/in.	amp-turns/meter	39.37
ampere-turns/in.	gilberts/cm	0.4950
ampere-turns/meter	amp/turns/cm	0.01
ampere-turns/meter	amp-turns/in.	0.0254
ampere-turns/meter	gilberts/cm	0.01257
Angstrom unit	Inch	3937×10^{-9}
Angstrom unit	Meter	1×10^{-10}
Angstrom unit	Micron or (Mu)	1×10^{-4}
Are	Acre (US)	0.02471
Ares	sq. yards	119.60
ares	acres	0.02471
ares	sq meters	100.0
Astronomical Unit	Kilometers	1.495×10^{8}
Atmospheres	Ton/sq. inch	0.007348
atmospheres	cms of mercury	76.0
atmospheres	ft of water (at 4°C)	33.90
atmospheres	in. of mercury (at 0°C)	29.92
atmospheres	kgs/sq cm	1.0333
atmospheres	kgs/sq meter	10,332
atmospheres	pounds/sq in.	14.70
atmospheres	tons/sq ft	1.058
	B	
Barrels (U.S., dry)	cu. inches	7056.0
Barrels (U.S., dry)	quarts (dry)	105.0
Barrels (U.S., liquid)	gallons	31.5
barrels (oil)	gallons (oil)	42.0
bars	atmospheres	0.9869
bars	dynes/sq cm	10^{4}
bars	kgs/sq meter	1.020×10^{4}
bars	pounds/sq ft	2,089.0
bars	pounds/sq in.	14.50
	B (Cont)	
Baryl	Dyne/sq. cm.	1.000
Bolt (US Cloth)	Meters	36.576
BTU	Liter-Atmosphere	10.409
Btu	ergs	1.0550×10^{10}
Btu	foot-lbs	778.3
Btu	gram-calories	252.0
Btu	horsepower-hrs	3.931×10^{-4}
Btu	joules	1,054.8
Btu	kilogram-calories	0.2520
Btu	kilogram-meters	107.5
Btu	kilowatt-hrs	2.928×10^{-4}
Btu/hr	foot-pounds/sec	0.2162
Btu/hr	gram-cal/sec	0.0700
Btu/hr	horsepower-hrs	3.929×10^{-4}
Btu/hr	watts	0.2931
Btu/min	foot-lbs/sec	12.96
Btu/min	horsepower	0.02356
Btu/min	kilowatts	0.01757
Btu/min	watts	17.57
Btu/sq ft/min	watts/sq in.	0.1221
Bucket (Br. dry)	Cubic Cm.	1.818×10^{4}
bushels	cu ft	1.2445
bushels	cu in.	2,150.4
bushels	cu meters	0.03524
bushels	liters	35.24
bushels	pecks	4.0
bushels	pints (dry)	64.0
bushels	quarts (dry)	32.0
	C	
Calories, gram(mean)	B.T.U. (mean)	3.9685×10^{-3}
Candle/sq. cm	Lamberts	3.142
Candle/sq. inch	Lamberts	0.4870
Centares (centiares)	sq meters	1.0
Centigrade	Fahrenheit	(C° X 9/5) + 32
centigrams	grams	0.01
Centiliter	Ounce fluid (US)	0.3382
Centiliter	Cubic inch	0.6103
Centiliter	drams	2.705
centiliters	liters	0.01
centimeters	feet	3.281×10^{-2}
centimeters	inches	0.3937
centimeters	kilometers	10^{-5}
centimeters	meters	0.01
centimeters	miles	6.214×10^{-8}
centimeters	millimeters	10.0
centimeters	mils	393.7
centimeters	yards	1.024×10^{-2}
centimeter-dynes	cm-grams	1.020×10^{-3}
centimeter-dynes	meter-kgs	1.020×10^{-8}
centimeter-dynes	pound-feet	7.376×10^{-8}
centimeter-grams	cm-dynes	980.7
centimeter-grams	meter-kgs	10^{-5}
centimeter-grams	pound-feet	7.233×10^{-5}
centimeters of mercury	atmospheres	0.01316
centimeters of mercury	feet of water	0.4461
centimeters of mercury	kgs/sq meter	136.0

Table B-6. Alphabetical Index of Metric Unit Conversions (Cont)

TO CONVERT	INTO	MULTIPLY BY
C (Cont)		
centimeters of mercury	pounds/sq ft	27.85
centimeters of mercury	pounds/sq in.	0.1934
centimeters/sec	feet/min	1.1969
centimeters/sec	feet/sec	0.03281
centimeters/sec	kilometers/hr	0.036
centimeters/sec	knots	0.1943
centimeters/sec	meters/min	0.6
centimeters/sec	miles/hr	0.02237
centimeters/sec	miles/min	3.728×10^{-4}
centimeters/sec/sec	feet/sec/sec	0.03281
centimeters/sec/sec	kms/hr/sec	0.036
centimeters/sec/sec	meters/sec/sec	0.01
centimeters/sec/sec	miles/hr/sec	0.02237
Chain	Inches	792.00
Chain	meters	20.12
Chains (surveyors' or Gunter's)	yards	22.00
circular mils	sq cms	5.067×10^{-6}
circular mils	sq mils	0.7854
Circumference	Radians	6.283
circular mils	sq inches	7.854×10^{-7}
Cords	cord feet	8
Cord feet	cu. feet	16
Coulomb	Statcoulombs	2.998×10^{9}
coulombs	faradays	1.036×10^{-5}
coulombs/sq cm	coulombs/sq in.	64.52
coulombs/sq cm	coulombs/sq meter	10^{4}
coulombs/sq in.	coulombs/sq cm	0.1550
coulombs/sq in.	coulombs/sq meter	1,550.0
coulombs/sq meter	coulombs/sq cm	10
coulombs/sq meter	coulombs/sq in.	6.452×10^{-4}
cubic centimeters	cu feet	3.531×10^{-5}
cubic centimeters	cu inches	0.06102
cubic centimeters	cu meters	10^{-6}
cubic centimeters	cu yards	1.308×10^{-6}
cubic centimeters	gallons (U.S. liq.)	2.642×10^{-4}
cubic centimeters	liters	0.001
cubic centimeters	pints (U.S. liq.)	2.113×10^{-3}
cubic centimeters	quarts (U.S. liq.)	1.057×10^{-3}
cubic feet	bushels (dry)	0.8036
cubic feet	cu cms	28,320.0
cubic feet	cu inches	1,728.0
cubic feet	cu meters	0.02832
cubic feet	cu yards	0.03704
cubic feet	gallons (U.S. liq.)	7.48052
cubic feet	liters	28.32
cubic feet	pints (U.S. liq.)	59.84
cubic feet	quarts (U.S. liq.)	29.92
cubic feet/min	cu cms/sec	472.0
cubic feet/min	gallons/sec	0.1247
cubic feet/min	liters/sec	0.4720
cubic feet/min	pounds of water/min	62.43
cubic feet/sec	million gals/day	0.646317
cubic feet/sec	gallons/min	448.831
cubic inches	cu cms	16.39
cubic inches	cu feet	5.787×10^{-4}
cubic inches	cu meters	1.639×10^{-5}
cubic inches	cu yards	2.143×10^{-5}
cubic inches	gallons	4.329×10^{-3}
cubic inches	liters	0.01639
cubic inches	mil-feet	1.061×10^{5}
C (Cont)		
cubic inches	pints(U.S. liq.)	0.03463
cubic inches	quarts(U.S. liq.)	0.01732
cubic meters	bushels (dry)	28.38
cubic meters	cu cms	10^{4}
cubic meters	cu feet	35.31
cubic meters	cu inches	61,023.0
cubic meters	cu yards	1.308
cubic meters	gallons (U.S. liq.)	264.2
cubic meters	liters	1,000.0
cubic meters	pints(U.S. liq.)	2,113.0
cubic meters	quarts (U.S. liq.)	1,057.0
cubic yards	cu cms	7.646×10^{5}
cubic yards	cu feet	27.0
cubic yards	cu inches	46,656.0
cubic yards	cu meters	0.7646
cubic yards	gallons (U.S. liq.)	202.0
cubic yards	liters	764.6
cubic yards	pints (U.S. liq.)	1,615.9
cubic yards	quarts (U.S. liq.)	807.9
cubic yards/min	cubic ft/sec	0.45
cubic yards/min	gallons/sec	3.367
cubic yards/min	liters/sec	12.74
D		
Dalton	Gram	1.650×10^{-24}
days	seconds	86,400.0
decigrams	grams	0.1
deciliters	liters	0.1
decimeters	meters	0.1
degrees (angle)	quadrants	0.01111
degrees (angle)	radians	0.01745
degrees (angle)	seconds	3,600.0
degrees/sec	radians/sec	0.01745
degrees/sec	revolutions/min	0.1667
degrees/sec	revolutions/sec	2.778×10^{-3}
dekagrams	grams	10.0
dekaliters	liters	10.0
dekameters	meters	10.0
Drams (apothecaries' or troy)	ounces (avoirdupois)	0.1371429
Drams (apothecaries' or troy)	ounces (troy)	0.125
Drams (U.S., fluid or apoth.)	cubic cm.	3.6967
drams	grams	1.7718
drams	grains	27.3437
drams	ounces	0.0625
Dyne/cm	Erg/sq. millimeter	0.01
Dyne/sq. cm.	Atmospheres	9.869×10^{-7}
Dyne/sq. cm.	Inch of Mercury at 0°C	2.953×10^{-5}
Dyne/sq.cm.	Inch of Water at 4°C	4.015×10^{-4}
dynes	grams	1.020×10^{-3}
dynes	joules/cm	10^{-7}
dynes	joules/meter (newtons)	10^{-5}
dynes	kilograms	1.020×10^{-6}
dynes	poundals	7.233×10^{-5}
dynes	pounds	2.248×10^{-6}
dynes/sq cm	bars	10^{-6}

Table B-6. Alphabetical Index of Metric Unit Conversions (Cont)

TO CONVERT	INTO	MULTIPLY BY
	E	
Ell	Cm.	114.30
Ell	Inches	45
Em, Pica	Inch	0.167
Em, Pica	Cm.	0.4233
Erg/sec	Dyne - cm/sec	1.000
ergs	Btu	9.480×10^{-11}
ergs	dyne-centimeters	1.0
ergs	foot-pounds	7.367×10^{-8}
ergs	gram-calories	0.2389×10^{-7}
ergs	gram-cms	1.020×10^{-3}
ergs	horsepower-hrs	3.7250×10^{-14}
ergs	joules	10^{-7}
ergs	kg-calories	2.389×10^{-11}
ergs	kg-meters	1.020×10^{-8}
ergs	kilowatt-hrs	0.2778×10^{-13}
ergs	watt-hours	0.2778×10^{-18}
ergs/sec	Btu/min	5.688×10^{-6}
ergs/sec	ft-lbs/min	4.427×10^{-6}
ergs/sec	ft-lbs/sec	7.3756×10^{-8}
ergs/sec	horsepower	1.341×10^{-10}
ergs/sec	kg-calories/min	1.433×10^{-9}
ergs/sec	kilowatts	10^{-10}
	F	
farads	microfarads	10^{6}
Faraday/sec	Ampere (absolute)	9.6500×10^{4}
faradays	ampere-hours	26.80
faradays	coulombs	9.649×10^{4}
Fathom	Meter	1.828804
fathoms	feet	6.0
feet	centimeters	30.48
feet	kilometers	3.048×10^{-4}
feet	meters	0.3048
feet	miles (naut.)	1.645×10^{-4}
feet	miles (stat.)	1.894×10^{-4}
feet	millimeters	304.8
feet	mils	1.2×10^{4}
feet of water	atmospheres	0.02950
feet of water	in. of mercury	0.8826
feet of water	kgs/sq cm	0.03048
feet of water	kgs/sq meter	304.8
feet of water	pounds/sq ft	62.43
feet of water	pounds/sq in	0.4335
feet/min	cms/sec	0.5080
feet/min	feet/sec	0.01667
feet/min	kms/hr	0.01829
feet/min	meters/min	0.3048
feet/min	miles/hr	0.01136
feet/sec	cms/sec	30.48
feet/sec	kms/hr	1.097
feet/sec	knots	0.5921
feet/sec	meters/min	18.29
feet/sec	miles/hr	0.6818
feet/sec	miles/min	0.01136
feet/sec/sec	cms/sec/sec	30.48
feet/sec/sec	kms/hr/sec	1.097
feet/sec/sec	meters/sec/sec	0.3048
feet/sec/sec	miles/hr/sec	0.6818
feet/100 feet	per cent grade	1.0
Foot - candle	Lumen/sq. meter	10.764
foot-pounds	Btu	1.286×10^{-3}
	F (Cont)	
foot-pounds	ergs	1.356×10^{7}
foot-pounds	gram-calories	0.3238
foot-pounds	hp-hrs	5.050×10^{-7}
foot-pounds	joules	1.356
foot-pounds	kg-calories	3.24×10^{-4}
foot-pounds	kg-meters	0.1383
foot-pounds	kilowatt-hrs	3.766×10^{-7}
foot-pounds/min	Btu/min	1.286×10^{-3}
foot-pounds/min	foot-pounds/sec	0.01667
foot-pounds/min	horsepower	3.030×10^{-5}
foot-pounds/min	kg-calories/min	3.24×10^{-4}
foot-pounds/min	kilowatts	2.260×10^{-5}
foot-pounds/sec	Btu/hr	4.6263
foot-pounds/sec	Btu/min	0.07717
foot-pounds/sec	horsepower	1.818×10^{-3}
foot-pounds/sec	kg-calories/min	0.01945
foot-pounds/sec	kilowatts	1.356×10^{-3}
Furlongs	miles(U.S.)	0.125
furlongs	rods	40.0
furlongs	feet	660.0
	G	
gallons	cu cms	3,785.0
gallons	cu feet	0.1337
gallons	cu inches	231.0
gallons	cu meters	3.785×10^{-3}
gallons	cu yards	4.951×10^{-3}
gallons	liters	3.785
gallons (liq Br. Imp.)	gallons (U.S. liq)	1.20095
gallons (U.S.)	gallons (Imp.)	0.83267
gallons of water	pounds of water	8.3453
gallons/min	cu ft/sec	2.228×10^{-3}
gallons/min	liters/sec	0.06308
gallons/min	cu ft/hr	8.0208
gausses	lines/sq in.	6.452
gausses	webers/sq cm	10^{-8}
gausses	webers/sq in.	6.452×10^{-8}
gausses	webers/sq meter	10^{-4}
gilberts	ampere-turns	0.7958
gilberts/cm	amp-turns/cm	0.7958
gilberts/cm	amp-turns/in	2.021
gilberts/cm	amp-turns/meter	79.58
Gills (British)	cubic cm.	142.07
gills	liters	0.1183
gills	pints (liq.)	0.25
Grade	Radian	0.01571
Grains	drams (avoirdupois)	0.03657143
grains (troy)	grains (avdp)	1.0
grains (troy)	grams	0.06480
grains (troy)	ounces (avdp)	2.0833×10^{-3}
grains (troy)	pennyweight (troy)	0.04167
grains/U.S. gal	parts/million	17.118
grains/U.S. gal	pounds/million gal	142.86
grains/Imp. gal	parts/million	14.286
grams	dynes	980.7
grams	grains	15.43
grams	joules/cm	9.807×10^{-5}
grams	joules/meter (newtons)	9.807×10^{-3}
grams	kilograms	0.001

Table B-6. Alphabetical Index of Metric Unit Conversions (Cont)

TO CONVERT	INTO	MULTIPLY BY
G (Cont)		
grams	milligrams	1.000.0
grams	ounces (avdp)	0.03527
grams	ounces (troy)	0.03215
grams	poundals	0.07093
grams	pounds	2.205×10^{-3}
grams/cm	pounds/inch	5.600×10^{-3}
grams/cu cm	pounds/cu ft	62.43
grams/cu cm	pounds/cu in	0.03613
grams/cu cm	pounds/mil-foot	3.405×10^{-7}
grams/liter	grains/gal	58.417
grams/liter	pounds/1.000 gal	8.345
grams/liter	pounds/cu ft	0.062427
grams/liter	parts/million	1,000.0
grams/sq cm	pounds/sq ft	2.0481
gram-calories	Btu	3.9683×10^{-3}
gram-calories	ergs	4.1868×10^{7}
gram-calories	foot-pounds	3.0880
gram-calories	horsepower-hrs	1.5596×10^{-6}
gram-calories	kilowatt-hrs	1.1630×10^{-6}
gram-calories	watt-hrs	1.1630×10^{-3}
grams-calories/sec	Btu/hr	14.286
gram-centimeters	Btu	9.297×10^{-8}
gram-centimeters	ergs	980.7
gram-centimeters	joules	9.807×10^{-5}
gram-centimeters	kg-cal	2.343×10^{-8}
gram-centimeters	kg-meters	10^{-5}
H		
Hand	Cm.	10.16
hetacres	acres	2.471
hectares	sq feet	1.076×10^{5}
hectograms	grams	100.0
hectoliters	liters	100.0
hectometers	meters	100.0
hectowatts	watts	100.0
henries	millihenries	1,000.0
Hogsheads (British)	cubic ft.	10.114
Hogsheads (U.S.)	cubic ft.	8.42184
Hogsheads (U.S)	gallons (U.S.)	63
horsepower	Btu/min	42.44
horsepower	foot-lbs/min	33,000.0
horsepower	foot-lbs/sec	550.0
horsepower (metric) (542.5 ft lb/sec)	horsepower (550 ft lb/sec)	0.9863
horsepower (550 ft lb/sec)	horsepower (metric) (542.5 ft lb/sec)	1.014
horsepower	kg-calories/min	10.68
horsepower	kilowatts	0.7457
horsepower	watts	745.7
horsepower (boiler)	Btu/hr	33.479
horsepower (boiler)	kilowatts	9.803
horsepower-hrs	Btu	2,547.0
horsepower-hrs	ergs	2.6845×10^{13}
horsepower-hrs	foot-lbs	1.98×10^{4}
horsepower-hrs	gram-calories	641,190.0
horsepower-hrs	joules	2.684×10^{4}
horsepower-hrs	kg-calories	641.1
horsepower-hrs	kg-meters	2.737×10^{5}
horsepower-hrs	kilowatts-hrs	0.7457
hours	days	4.167×10^{-2}
H (Cont)		
hours	weeks	5.952×10^{-3}
Hundredweights (long)	pounds	112
Hundredweights (long)	tons (long)	0.05
Hundredweights (short)	ounces (avoirdupois)	1600
Hundredweights (short)	pounds	100
Hundredweights (short)	tons (metric)	0.0453592
Hundredweights (short)	tons (long)	0.0446429
I		
inches	centimeters	2.540
inches	meters	2.540×10^{-2}
inches	miles	1.578×10^{-5}
inches	millimeters	25.40
inches	mils	1,000.0
inches	yards	2.778×10^{-2}
inches of mercury	atmospheres	0.03342
inches of mercury	feet of water	1.133
inches of mercury	kgs/sq cm	0303453
inches of mercury	kgs sq meter	345.3
inches of mercury	pounds/sq ft	70.73
inches of mercury	pounds/sq in.	0.4912
inches of water (at 4°C)	atmospheres	2.458×10^{-3}
inches of water (at 4°C)	inches of mercury	0.07355
inches of water (at 4°C)	kgs/sq cm	2.540×10^{-3}
inches of water (at 4°C)	ounces/sq in.	0.5781
inches of water (at 4°C)	pounds/sq ft	5.204
inches of water (at 4°C)	pounds/sq in.	0.03613
International Ampere	Ampere (absolute)	0.9998
International Volt	Volts (absolute)	1.0003
International volt	Joules (absolute)	$1\text{-}593 \times 10^{-19}$
International volt	Joules	9.654×10^{4}
J		
joules	Btu	9.480×10^{-4}
joules	ergs	10^{7}
joules	foot-pounds	0.7376
joules	kg calories	2.389×10^{-4}
joules	kg-meters	0.1020
joules	watt-hrs	2.778×10^{-4}
joules/cm	grams	1.020×10^{4}
joules/cm	dynes	10^{7}
joules/cm	joules/meter (newtons)	100.0
joules/cm	poundals	723.3
joules/cm	pounds	22.48
K		
kilograms	dynes	980,665.0
kilograms	grams	1,000.0
kilograms	joules/cm	0.09807
kilograms	joules/meter (newtons)	9.807
kilograms	poundals	70.93
kilograms	pounds	2.205
kilograms	tons (long)	9.842×10^{-4}
kilograms	tons (short)	1.102×10^{-3}
kilograms/cu meter	grams/cu cm	0.001
kilograms/cu meter	pounds/cu ft	0.06243
kilograms/cu meter	pounds/cu in.	3.613×10^{-5}

Table B-6. Alphabetical Index of Metric Unit Conversions (Cont)

TO CONVERT	INTO	MULTIPLY BY
	K (Cont)	
kilograms/cu meter	pounds/mil-foot	3.405×10^{-10}
kilograms/meter	pounds/ft	0.6720
Kilogram/sq. cm.	Dynes	980,665
kilograms/sq cm	atmospheres	0.9678
kilograms/sq cm	feet of water	32.81
kilograms/sq cm	inches of mercury	28.96
kilograms/sq cm	pounds/sq ft	2,048.0
kilograms/sq cm	pounds/sq in.	14.22
kilograms/sq meter	atmospheres	9.678×10^{-5}
kilograms/sq meter	bars	98.07×10^{-6}
kilograms/sq meter	feet of water	3.281×10^{-3}
kilograms/sq meter	inches of mercury	2.896×10^{-3}
kilograms/sq meter	pounds/sq ft	0.2048
kilograms/sq meter	pounds/sq in.	1.422×10^{-3}
kilograms/sq mm	kgs/sq meter	10^{6}
kilogram-calories	Btu	3.968
kilogram-calories	foot-pounds	3,088
kilogram-calories	hp-hrs	1.560×10^{-3}
kilogram-calories	joules	4,186
kilogram-calories	kg-meters	426.9
kilogram-calories	kilojoules	4.186
kilogram-calories	kilowatt-hrs	1.163×10^{-3}
kilogram meters	Btu	9.294×10^{-3}
kilogram meters	ergs	9.804×10^{7}
kilogram meters	foot-pounds	7.233
kilogram meters	joules	9.804
kilogram meters	kg-calories	2.342×10^{-3}
kilogram meters	kilowatt-hrs	2.723×10^{-6}
kilolines	maxwells	1,000.0
kiloliters	liters	1,000.0
kilometers	centimeters	10^{5}
kilometers	feet	3,281.0
kilometers	inches	3.937×10^{4}
kilometers	meters	1,000.0
kilometers	miles	0.6214
kilometers	millimeters	10^{6}
kilometers	yards	1,094.0
kilometers/hr	cms/sec	27.78
kilometers/hr	feet/min	54.68
kilometers/hr	feet/sec	0.9113
kilometers/hr	knots	0.5396
kilometers/hr	meters/min	16.67
kilometers/hr	miles/hr	0.6214
kilometers/hr/sec	cms/sec/sec	27.78
kilometers/hr/sec	ft/sec/sec	0.9113
kilometers/hr/sec	meters/sec/sec	0.2778
kilometers/hr/sec	miles/hr/sec	0.6214
kilowatts	Btu/min	56.92
kilowatts	foot-lbs/min	4.426×10^{4}
kilowatts	foot-lbs/sec	737.6
kilowatts	horsepower	1.341
kilowatts	kg-calories/min	14.34
kilowatts	watts	1,000.0
kilowatt-hrs	Btu	3,413.0
kilowatt-hrs	ergs	3.600×10^{13}
kilowatt-hrs	foot-lbs	2.655×10^{4}
kilowatt-hrs	gram-calories	859,850.0
kilowatt-hrs	horsepower-hrs	1.341
kilowatt-hrs	joules	3.6×10^{4}
kilowatt-hrs	kg-calories	860.5
	K (Cont)	
kilowatt-hrs	kg-meters	3.671×10^{5}
kilowatt-hrs	pounds of water evaporated from and at 212°F	3.53
kilowatt-hrs	pounds of water raised from 62° to 212°F	22.75
knots	feet/hr	6,080.0
knots	kilometers/hr	1.8532
knots	nautical miles/hr	1.0
knots	statute miles/hr	1.151
knots	yards/hr	2,027.0
knots	feet/sec	1.689
	L	
league	miles(approx.)	3.0
Light year	Miles	5.9×10^{12}
Light year	Kilometers	9.46091×10^{12}
lines/sq cm	gausses	1.0
lines/sq in.	gausses	0.1550
lines/sq in.	webers/sq cm	1.550×10^{-9}
lines/sq in.	webers/sq in.	10^{-8}
lines/sq in.	webers/sq meter	1.550×10^{-5}
links (engineer's)	inches	12.0
links (surveyor's)	inches	7.92
liters	bushels (U.S. dry)	0.02838
liters	cu cm	1,000.0
liters	cu inches	61.02
liters	cu meters	0.001
liters	cu yards	1.308×10^{-3}
liters	gallons (U.S. liq.)	0.2642
liters	pints (U.S. liq.)	2.113
liters	quarts (U.S. liq.)	1.057
liters/min	cu ft/sec	5.886×10^{-4}
liters/min	gals/sec	4.403×10^{-3}
lumens/sq ft	foot-candles	1.0
Lumen	Spherical candle power	0.07958
Lumen	Watt	0.001496
Lumen/sq. ft.	Lumen/sq. meter	10.76
lux	foot-candles	0.0929
	M	
maxwells	kilolines	0.001
maxwells	webers	10^{-3}
megalines	maxwells	10^{4}
megohms	microhms	10^{12}
megohms	ohms	10^{6}
meters	centimeters	100.0
meters	feet	3.281
meters	inches	39.37
meters	kilometers	0.001
meters	miles (stat.)	6.214×10^{-4}
meters	millimeters	1,000.0
meters	yards	1.094
meters	yards	1.179
meters/min	cms/sec	1.667

Table B-6. Alphabetical Index of Metric Unit Conversions (Cont)

TO CONVERT	INTO	MULTIPLY BY
M (Cont)		
meters/min	feet/min	3.281
meters/min	feet/sec	0.05468
meters/min	kms/hr	0.06
meters/min	knots	0.03238
meters/min	miles/hr	0.03728
meters/sec	feet/min	196.8
meters/sec	feet/sec	3.281
meters/sec	kilometers/hr	3.6
meters/sec	kilometers/min	0.06
meters/sec	miles/hr	2.237
meters/sec	miles/min	0.03728
meters/sec/sec	cms/sec/sec	100.0
meters/sec/sec	ft/sec/sec	3.281
meters/sec/sec	kms/hr/sec	3.6
meters/sec/sec	miles/hr/sec	2.237
meter-kilograms	cm-dynes	9.807×10^{7}
meter-kilograms	cm-grams	10^{5}
meter-kilograms	pound-feet	7.233
microfarad	farads	10^{-6}
micrograms	grams	10^{-6}
microhms	megohms	10^{-12}
microhms	ohms	10^{-6}
microliters	liters	10^{-6}
Microns	meters	1×10^{-6}
miles (naut.)	feet	6,080.27
miles (naut.)	kilometers	1.853
miles (naut.)	meters	1,853.0
miles (naut.)	miles (statute)	1.1516
miles (naut.)	yards	2,027.0
miles (statute)	centimeters	1.609×10^{5}
miles (statute)	feet	5,280.0
miles (statute)	inches	6.336×10^{4}
miles (statute)	kilometers	1.609
miles (statute)	meters	1,609.0
miles (statute)	miles (naut)	0.8684
miles (statute)	yards	1,760.0
miles/hr	cms/sec.	44.70
miles/hr	feet/min	88.0
miles/hr	feet/sec	1.467
miles/hr	kms/hr	1.609
miles/hr	kms/min	0.02682
miles/hr	kms/min	0.02682
miles/hr	knots	0.8684
miles/hr	meters/min	26.82
miles/hr	miles/min	0.1667
miles/hr/sec	cms/sec/sec	44.70
miles/hr/sec	feet/sec/sec	1.467
miles/hr/sec	kms/hr/sec	1.609
miles/hr/sec	meters/sec/sec	0.4470
miles/min	cms/sec	2,682.0
miles/min	feet/sec	88.0
miles/min	kms/minn	1.609
miles/min	knots/min	0.8684
miles/min	miles/hr	60.0
mil-feet	cu inches	9.425×10^{-6}
milliers	kilograms	1,000.0
Millimicrons	meters	1×10^{-9}
Milligrams	grains	0.01543236
milligrams	grams	0.001
milligrams/liter	parts/million	1.0
millihenries	henries	0.001
M (Cont)		
milliliters	liters	0.001
millimeters	centimeters	0.1
millimeters	feet	3.281×10^{-3}
millimeters	inches	0.03937
millimeters	kilometers	10^{-6}
millimeters	meters	0.001
millimeters	miles	6.214×10^{-7}
millimeters	mils	39.37
millimeters	yards	1.094×10^{-3}
million gals/day	cu ft/sec	1.54723
mils	centimeters	2.540×10^{-3}
mils	feet	8.333×10^{-5}
mils	inches	0.001
mils	kilometers	2.540×10^{-8}
mils	yards	2.778×10^{-5}
miner's inches	cu ft/min	1.5
Minims (British)	cubic cm.	0.059192
Minims (U.S., fluid)	cubic cm.	0.061612
minutes (angles)	degrees	0.01667
minutes (angles)	quadrants	1.852×10^{-4}
minutes (angles)	radians	2.909×10^{-4}
minutes (angles)	seconds	60.0
myriagrams	kilograms	10.0
myriameters	kilometers	10.0
myriawatts	kilowatts	10.0
N		
nepers	decibels	8.686
Newton	Dynes	1×10^{5}
O		
OHM (International)	OHM (absolute)	1.0005
ohms	megohms	10^{-6}
ohms	microhms	10^{6}
ounces	drams	16.0
ounces	grains	437.5
ounces	grams	28.349527
ounces	pounds	0.0625
ounces	ounces (troy)	0.9115
ounces	tons (long)	2.790×10^{-5}
ounces	tons (metric)	2.835×10^{-5}
ounces (fluid)	cu inches	1.805
ounces (fluid)	liters	0.02957
ounces (troy)	grains	480.0
ounces (troy)	grams	31.103481
ounces (troy)	ounces (avdp)	1.09714
ounces (troy)	pennyweights (troy)	20.0
ounces (troy)	pounds (troy)	0.08333
Ounce/sq. inch	Dynes/sq cm	0.4309
ounces/sq in.	pounds/sq in.	0.0625
P		
Parsec	Miles	19×10^{12}
Parsec	Kilometers	3.084×10^{13}
part-/million	grains/U.S. gal	0.0584
parts/million	grains/Imp. gal	0.07016

Table B-6. Alphabetical Index of Metric Unit Conversions (Cont)

TO CONVERT	INTO	MULTIPLY BY
	P (Cont)	
parts/million	pounds/million gal	8.345
Pecks (British)	cubic inches	554.6
Pecks (British)	liters	9.091901
Pecks (U.S.)	bushels	0.25
Pecks (U.S.)	cubic inches	37.605
Pecks (U.S.)	liters	8.809582
Pecks (U.S.)	quarts (dry)	8
pennyweights (troy)	grains	24.0
pennyweights (troy)	ounces (troy)	0.05
pennyweights (troy)	grams	1.55517
pennyweights (troy)	pounds (troy)	4.1667×10^{-3}
pints (dry)	cu inches	33.60
pints (liq.)	cu cms.	473.2
pints (liq.)	cu feet	0.01671
pints (liq.)	cu inches	28.87
pints (liq.)	cu meters	4.732×10^{-4}
pints (liq.)	cu yards	6.189×10^{-4}
pints (liq.)	gallons	0.125
pints (liq.)	liters	0.4732
pints (liq.)	quarts (liq.)	0.5
Planck's quantum	Erg second	6.624×10^{-27}
Poise	Gram/cm. sec.	1.00
Pounds (avoirdupois)	ounces (troy)	14.5833
poundals	dynes	13,826.0
poundals	grams	14.10
poundals	joules/cm	1.383×10^{-3}
poundals	joules/meter (newtons)	0.1383
poundals	kilograms	0.01410
poundals	pounds	0.03108
pounds	drams	256.0
pounds	dynes	44.4823×10^{4}
pounds	grains	7,000.0
pounds	grams	453.5924
pounds	joules/cm	0.04448
pounds	joules/meter (newtons)	4.448
pounds	kilograms	0.4536
pounds	ounces	16.0
pounds	ounces (troy)	14.5833
pounds	poundals	32.17
pounds	pounds (troy)	1.21528
pounds	tons (short)	0.0005
pounds (troy)	grains	5,760.0
pounds (troy)	grams	373.24177
pounds (troy)	ounces (avdp.)	13.1657
pounds (troy)	pennyweights (troy)	240.0
pounds (troy)	pounds (avdp.)	0.822857
pounds (troy)	tons (long)	3.6735×10^{-4}
pounds (troy)	tons (metric)	3.7324×10^{-4}
pounds (troy)	tons (short)	4.1143×10^{-4}
pounds of water	cu feet	0.01602
pounds of water	cu inches	27.68
pounds of water/min	cu ft/sec	2.670×10^{-4}
pound-feet	cm-dynes	1.356×10^{7}
pound-feet	cm-grams	13,825.0
pound-feet	meter-kgs	0.1383
pounds/cu ft	grams/cu cm	0.01602
pounds/cu ft	kgs/cu meter	16.02
pounds/cu ft	pounds/cu in.	5.787×10^{-4}
pounds/cu ft	pounds/mil-loot	5.456×10^{-9}
pounds/cu in.	gms/cu cm	27.68
	P (Cont)	
pounds/cu in.	kgs/cu meter	2.768×10^{4}
pounds/cu in.	pounds/cu ft	1,728.0
pounds/cu in.	pounds/mil-foot	9.425×10^{-6}
pounds/ft	kgs-meter	1.488
pounds/in.	gms/cm	178.6
pounds/mil-foot	gms/cu cm	2.306×10^{6}
pounds/sq ft	atmospheres	4.725×10^{-4}
pounds/sq ft	feet of water	0.01602
pounds/sq ft	inches of mercury	0.01414
pounds/sq ft	kgs/sq meter	4.882
pounds/sq ft	pounds/sq in.	6.944×10^{-3}
pounds/sq. in.	atmospheres	0.06804
pounds/sq in.	feet of water	2.307
pounds/sq in.	inches of mercury	2.036
pounds/sq in.	kgs/sq meter	703.1
pounds/sq in.	pounds/sq ft	144.0
	Q	
quadrants (angle)	degrees	90.0
quadrants (angle)	minutes	5,400.0
quadrants (angle)	radians	1.571
quadrants (angle)	seconds	3.24×10^{5}
quarts (dry)	cu inches	67.20
quarts (liq.)	cu cms	946.4
quarts (liq)	cu feet	0.03342
quarts (liq.)	cu inches	57.75
quarts (liq.)	cu meters	9.464×10^{-4}
quarts (liq.)	cu yards	1.238×10^{-3}
quarts (liq.)	gallons	0.25
quarts (liq.)	liters	0.9463
	R	
radians	degrees	57.30
radians	minutes	3,438.0
radians	quadrants	0.6366
radians	seconds	2.063×10^{5}
radians/sec	degrees/sec	57.30
radians/sec	revolutions/min	9.549
radians/sec	revolutions/sec	0.1592
radians/sec/sec	revs/min/min	573.0
radians/sec/sec	revs/min/sec	9.549
radians/sec/sec	revs/sec/sec	0.1592
revolutions	degrees	360.0
revolutions	quadrants	4.0
revolutions	radians	6.283
revolutions/min	degrees/sec	6.0
revolutions/min	radians/sec	0.1047
revolutions/min	revs/sec	0.01667
revolutions/miri/min	radians/sec/sec	1.745×10^{-3}
revolutions/min/min	revs/min/sec	0.01667
revolutions/min/min	revs/sec/sec	2.778×10^{-4}
revolutions/sec	degrees/sec	360.0
revolutions/sec	radians/sec	6.283
revolutions/sec	revs/min	60.0
revolutions/sec/sec	radians/sec/sec	6.283
revolutions/sec/sec	revs/min/min	3,600.0
revolutions/sec/sec	revs/min/sec	60.0

Table B-6. Alphabetical Index of Metric Unit Conversions (Cont)

TO CONVERT	INTO	MULTIPLY BY
R (Cont)		
Rod	Chain (Gunters)	0.25
Rod	Meters	5.029
Rods (Surveyors' meas.)	yards	5.5
rods	feet	16.5
S		
Scruples	grains	20
seconds (angle)	degrees	2.778×10^{-4}
seconds (angle)	minutes	0.01667
seconds (angle)	quadrants	3.087×10^{-6}
seconds (angle)	radians	4.848×10^{-6}
Slug	Kilogram	14.59
Slug	Pounds	32.17
Sphere	Steradians	12.57
square centimeters	circular mils	1.973×10^{5}
square centimeters	sq feet	1.076×10^{-3}
square centimeters	sq inches	0.1550
square centimeters	sq meters	0.0001
square centimeters	sq miles	3.861×10^{-11}
square centimeters	sq millimeters	100.0
square centimeters	sq yards	1.196×10^{-4}
square feet	acres	2.296×10^{-5}
square feet	sq cms	929.0
square feet	sq inches	144.0
square feet	sq meters	0.09290
square feet	sq miles	3.587×10^{-6}
square feet	sq millimeters	9.290×10^{4}
square feet	sq yards	0.1111
square inches	circular mils	1.273×10^{6}
square inches	sq cms	6.452
square inches	sq feet	6.944×10^{-3}
square inches	sq millimeters	645.2
square inches	sq mils	10 6
square inches	sq yards	7.716×10^{-4}
square kilometers	acres	247.1
square kilometers	sq cms	10 10
square kilometers	sq ft	10.76×10^{6}
square kilometers	sq inches	1.550×10^{9}
square kilometers	sq meters	10^{6}
square kilometers	sq miles	0.3861
square kilometers	sq yards	1.196×10^{6}
square meters	acres	2.471×10^{-4}
square meters	sq cms	10^{4}
square meters	sq feet	10.76
square meters	sq inches	1,550.0
square meters	sq miles	3.861×10^{-7}
square meters	sq millimeters	10^{6}
square meters	sq yards	1.196
square miles	acres	640.0
square miles	sq feet	27.88×10^{6}
square miles	sq kms	2.590
square miles	sq meters	2.590×10^{6}
square miles	sq yards	3.098×10^{6}
square millimeters	circular mils	1,973.0
square millimeters	sq cms	0.01
square millimeters	sq feet	1.076×10^{-5}
square millimeters	sq inches	1.550×10^{-3}
square mils	circular mils	1.273
S (Cont)		
square mils	sq cms	6.452×10^{6}
square mils	sq inches	10^{-6}
square yards	acres	2.066×10^{-4}
square yards	sq cms	8,361.0
square yards	sq feet	9.0
square yards	sq inches	1,296.0
square yards	sq meters	0.8361
square yards	sq miles	3.228×10^{-7}
square yards	sq millimeters	$8,361 \times 10^{5}$
T		
temperature (°C) +273	absolute temperature (°C)	1.0
temperature (°C) +17.78	temperature (°F)	1.8
temperature (°F) +460	absolute temperature (°F)	1.0
temperature (°F)32	temperature (°C)	5/9
tons (long)	kilograms	1,016.0
tons (long)	pounds	2,240.0
tons (long)	tons (short)	1.120
tons (metric)	kilograms	1,000.0
tons (metric)	pounds	2,205.0
tons (short)	kilograms	907.1848
tons (short)	ounces	32,000.0
tons (short)	ounces (troy)	29,166.66
tons (short)	pounds	2,000.0
tons (short)	pounds (troy)	2,430.56
tons (short)	tons (long)	0.89287
tons (short)	tons (metric)	0.9078
tons (short)/sq ft	kgs/sq meter	9,765.0
tons (short)/sq ft	pounds/sq in.	2,000.0
tons of water/24 hrs	pounds of water/hr	83.333
tons of water/24 hrs	gallons/min	0.16643
tons of water/24 hrs	cu ft/hr	1.3349
V		
Volt/inch	Volt/cm.	0.39370
Volt (absolute)	Statvolts	0.003336
W		
watts	Btu/hr	3.4129
watts	Btu/min	0.05688
Watts	ergs/sec	107.0
watts	foot-lbs/min	44.27
watts	foot-lbs/sec	0.7378
watts	horsepower	1.341×10^{-3}
watts	horsepower (metric)	1.360×10^{-3}
watts	kg-calories/min	0.01433
watts	kilowatts	0.001
Watts (Abs.)	B.T.U. (mean)/min.	0.056884
Watts (Abs.)	joules/sec.	1
watt-hours	Btu	3.413
watt-hours	ergs	3.60×10^{10}
watt-hours	foot-pounds	2,656.0
watt-hours	gram-calories	859.85

Table B-6. Alphabetical Index of Metric Unit Conversions (Cont)

TO CONVERT	INTO	MULTIPLY BY
	W (Cont)	
watt-hours	horsepower-hrs	1.341×10^{-3}
watt-hours	kilogram-calories	0.8605
watt-hours	kilogram-meters	367.2
watt-hours	kilowatt-hrs	0.001
Watt (International)	Watt (absolute)	1.0002
webers	maxwells	10^{8}
webers	kilolines	10^{5}
webers/sq in.	gausses	1.550×10^{7}
webers/sq in.	lines/sq in.	10^{8}
webers/sq in	webers/sq cm	0.1550
webers/sq in.	webers/sq meter	1,550.0
webers/sq meter	gausses	10^{4}
webers/sq meter	lines/sq in.	6.452×10^{4}
webers/sq meter	webers/sq cm	10^{-4}
webers/sq meter	webers/sq in.	6.452×10^{-4}
	Y	
yards	centimeters	91.44
yards	kilometers	9.144×10^{-4}
yards	meters	0.9144×10^{-4}
yards	miles (naut.)	4.934×10^{-4}
yards	miles (stat.)	5.682×10^{-4}
yards	millimeters	914.4

THIS PAGE INTENTIONALLY LEFT BLANK.

GLOSSARY

ABRASION. A fuzzy spot or area on cloth, usually caused by rubbing against another object.

ACID. A fundamental chemical class distinguished by having reactive hydrogen radicals (pH below 7.0). Acids can be extremely corrosive to metal and damaging to fabric.

AIRCREWMAN. An aircraft crewmember. Passengers are not considered aircrewmen.

ALKALINE. A substance which is opposite to an acid, a base (pH above 7.0). Also, any substance which has the properties of an alkali (metallic hydroxide).

ALPACA. The wooly hair from the alpaca. Alpaca wool is used in marking linings and thin cloth.

APPROX. Abbreviation for approximately.

AQUEOUS. Made with, or from water.

A/R or AR. Abbreviation for as required.

ARAMID. A heat resistant knit material with excellent stability to 700 degrees F (replaces polyamide material).

ASSEMBLY. A grouping of parts fitted together to form a complete unit.

ATTENUATION. Reduction or lessening. For example, sound attenuation is the reduction of ambient noise in an aircraft by use of a helmet equipped with sound attenuating earphones; sonic earcup.

BACKSTITCH. A stitch made by inserting the needle a stitch length behind and bringing it up a stitch length ahead of the last stitch. Also, sewing back over a row of stitches.

BARTACK. A concentrated series of zig-zag like stitches used to reinforce points of stress.

BEESWAX. A wax that is applied cold or melted to thread to prevent raveling or cloth unknotting and to make thread easier to sew.

BINDING. A piece of tape or fabric folded over and stitched to a raw edge of cloth to prevent raveling or fraying.

BOXSTITCH. Rectangular stitch used to attach or reinforce.

C. Abbreviation for Celsius. A thermometric scale of which the interval between the freezing point and boiling point of water is divided into 100 degrees. 0 degrees C represents the freezing point and 100 degrees C represents the boiling point of water.

CAGE. Commercial and Government Entity codes for commercial and government procurement sources as listed in the cataloging handbooks H4/H8.

CARTRIDGE. A cylindrical, non-refillable container.

CDI. Abbreviation for Collateral Duty Inspector. A CDI is permanently assigned to a production division with secondary quality assurance assignments to inspect work accomplished within his production division.

℄. Symbol for centerline.

COMPONENT. An item of equipment making up part of an assembly.

CONFIGURATION. The make-up, size, shape, and relative location of parts in an item of equipment and its accessories. This includes the composition of the materials as well as marking details. The configuration of each equipment is specified by government drawings, military specifications, and modification instructions.

COVERALL, ANTI-EXPOSURE. A one-piece outer garment worn to provide protection in adverse, low temperature conditions.

COVERALL, ANTI-G CUTAWAY. A garment worn by the aircrewmen of high performance aircraft to counteract the gravity forces caused by accelerations of aircraft maneuvers.

CROSSBOX STITCH. A boxstitch with an X pattern stitch inside. Sometimes called BOX-X STITCH.

CYLINDER. A cylindrical, refillable container.

D-RING. A metal fitting shaped in the form of the letter “D”.

DART. A stitched, tapering fold in a section of fabric. Used for shaping the fabric by gathering material to conform with a predetermined contour.

DETAIL PART. See COMPONENT.

DIA. Abbreviation for diameter.

DISPOSITION. Instructions on what is to be done with items which are obsolete, worn out, or beyond repair.

DOFF. To remove or take off an item of clothing or equipment.

DON. To put on an item of clothing or equipment.

EDGEROLL. A beading around the border of a helmet shell, protecting the wearer from sharp edges and adding to energy absorption.

EGRESS. Outlet or means of getting out.

EJECTION SEAT. An emergency escape seat for propelling an occupant out and away from the aircraft by means of an explosive charge or rocket motor.

ELASTOMER. Any of various elastic substances resembling rubber.

EXTRUSION. A raised or grooved surface or edge.

F. Abbreviation for Fahrenheit. Pertaining to the thermometric scale where 32 degrees represents the freezing point of water and 212 degrees the boiling point.

FABRICATE. To make up or construct an item of equipment, accessory or material.

FAKE. To fold a line or lanyard in a back and forth fashion.

FASTENER, SLIDE. A type of fastener made of two lengths of tape with a series of metal or plastic scoops fastened to one side of each. A metal slide is provided which causes the scoops to mesh or lock in place as the fastener is closed, or to separate as the fastener is opened. Colloquial: ZIPPER.

FASTENER, SNAP. A metal fastener containing essentially a ball and a socket attached to opposed parts of a material and used to hold mating surfaces together.

FIBER. A natural or synthetic filament (as of wool, cotton, rayon, etc.) capable of being spun into yarn.

FID. A small, flat, hand tool of metal or wood used during the packing procedure to straighten and insert flaps into the container.

FITTING, QUICK-RELEASE. A device used to connect and release on instant response.

FITTING, SWAGE. A connection, adapter, or clamp which is fastened to a cable by pressure. It is applied by means of a machine which compresses the fitting, causing it to tightly grip the cable or wire to which is being attached.

FOLDER. A device used as an attachment to a sewing machine to guide and fold cloth.

FUNCTIONAL TEST. A test which puts an item to its intended use to determine if it operates correctly.

GAGE. An instrument for measuring pressure.

GAUGE. A measurement of size or thickness.

GFE. Abbreviation for Government Furnished Equipment.

GROMMET. A metal eye and washer used to reinforce a hole in material.

HARDWARE. Items made of metal such as tools, fittings, fasteners, and appliances.

HEM. A border or reinforced edge formed by folding cloth back and securing it, usually by sewing.

HOOK TAPE. A strip of fabric tape with miniature hooks on one side. Hook tape is used together with pile tape as a fastener.

IN. Abbreviation for inches.

INFLATION ASSEMBLY. Inflation valve and carbon dioxide cylinder as a unit.

INH_2O. Abbreviation for inches of water column (27.68 inH_2O equals 1 PSI equals 2.036 inHg).

INHg. Abbreviation for inches of mercury column (0.07349 IN.Hg equals 1.0 IN.H2O).

INSPECTION. A close examination for damage wear and dirt. Also, a regularly scheduled examination of oxygen equipment and accessories.

KNOT, BINDER. The simplest method of joining two threads or lines. The two ends are placed side by side and a simple, overhand knot is then tied in both lines simultaneously. It will not slip when drawn tightly. Also called a thumb knot.

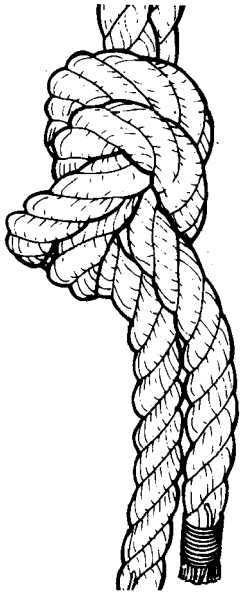

g001

KNOT, BOWLINE. The knot formed by making a small overhand loop a desired distance from the end of the line. The end of the line is then passed through the loop from the underside of the main part of the line and around behind standing line then back through the small loop. When this knot is drawn tight, it will not slip but can be easily untied.

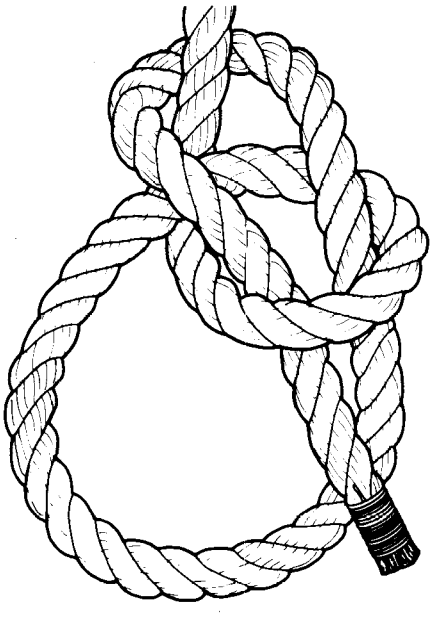

g002

KNOT, HALF-HITCH. A knot formed by passing a cord or line around an object, then passing the free end around the main part of the cord and bringing the free end up through the loop thus formed.

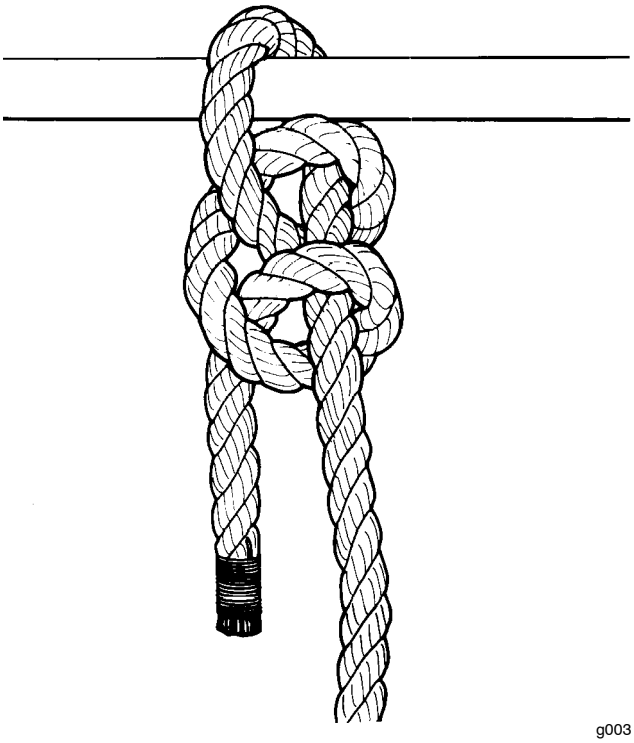

g003

KNOT, LARK'S HEAD. A knot formed around an attachment ring or bar by passing the free ends of the line around the bar or through the ring and then through the loop or bight in the line.

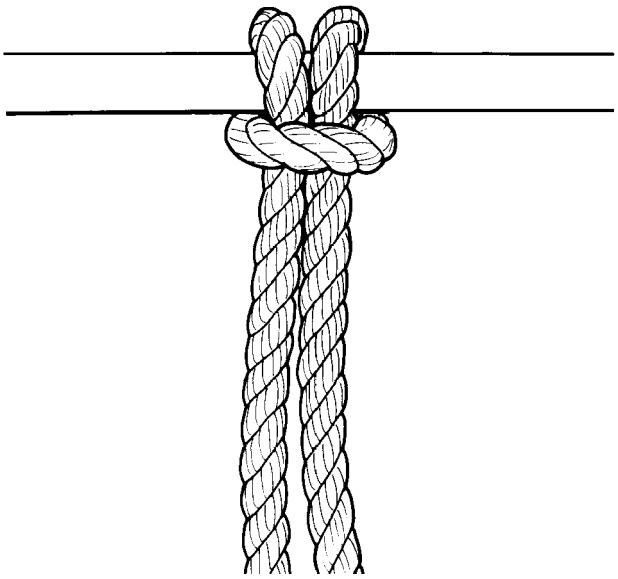

g004

KNOT, OVERHAND. A simple knot tied in the end of a line by forming a loop and passing the end over and down through the loop.

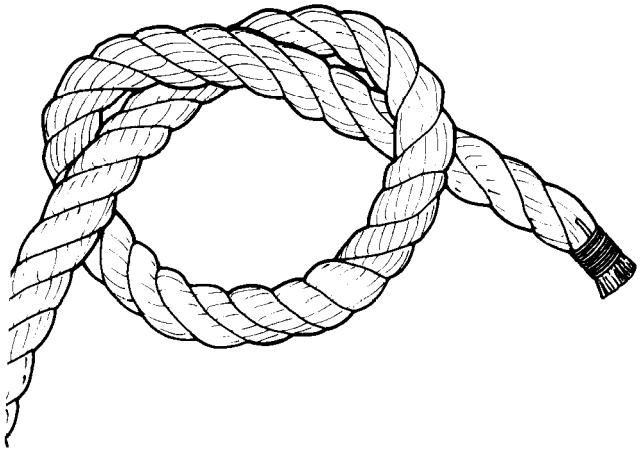

g005

KNOT, OVERHAND LOOP. Double the line forming a loop; then tie a simple overhand knot forming as large a loop as desired.

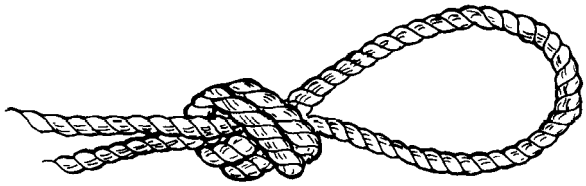

g006

KNOT, SURGEON'S. The surgeon's knot is similar to the square knot, except that the first overhand tie is wrapped twice around the cord or line.

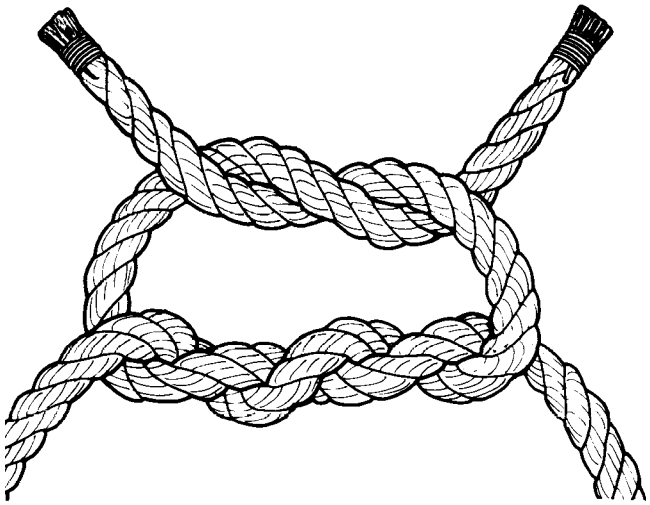

g007

KNOT, SQUARE. A knot formed by passing the end of the cord in the left hand over and under the end in the right hand and then reversing the process by passing the end in the right hand over and under the end in the left-hand.

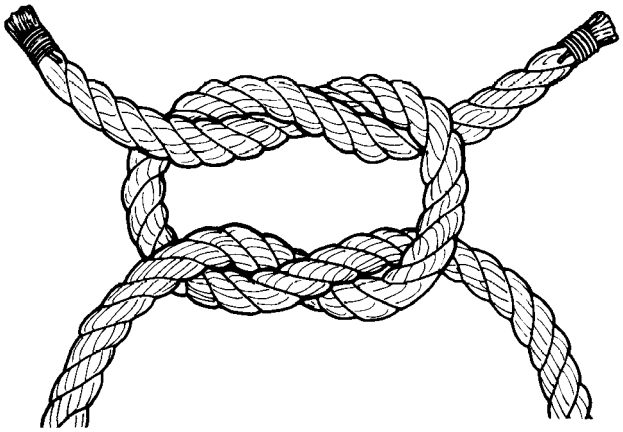

g008

LB. Abbreviation for pounds.

LOCKSTITCH. A common sewing-machine stitch formed when the thread in the needle goes through the material and connects with the bobbin thread. The needle and bobbin thread should lock in the center of the material thickness. (Ref. ASTM-D-6193, Type 301).

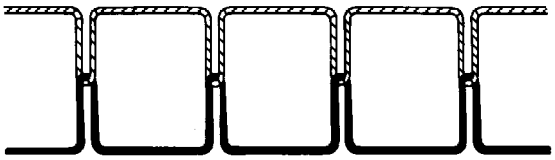

g009

LOCKWIRE. A wire that prevents loosening of a securing device.

LPM. Abbreviation for liters per minute.

MANUFACTURER'S CODES. See CAGE.

MILDEW. A damaging fungus or mold which forms on cloth or leather. It is caused by dampness and the absence of fresh air and sunlight.

MISSING STITCHES. A space between stitches in the same row, in which there is no thread.

MOUTON. A processed sheepskin that has been sheared and dyed to resemble beaver or seal.

NAMEPLATE. A label attached to equipment, giving data as to type, model number, date of manufacture, part number, serial number, etc.

NEGATIVE G FITTING. Hardware installed on the seat survival kit to prevent movement of the kit in all flight conditions.

NEGATIVE G STRAP. Performs the same function as the negative G fitting, but incorporates nylon straps instead of hardware.

NHA. Abbreviation for next higher assembly.

NO. Abbreviation for number.

PACK. To put together compactly; to store neatly; for example, packing a survival kit consists of stowing the survival equipment in a container, folding and covering the raft, and inserting both into the kit container.

PARAFFIN. Wax generally used with 50 percent beeswax as a hot dip to prevent the fraying of cut ends of webbing, cord, thread or tape. See also: BEESWAX.

pH VALUE. A numerical scale of measuring the acidity or alkalinity of a solution. A pH reading can be made using litmus paper and comparison chart. A reading of 7.0 indicates a neutral solution; below 7.0 indicates acid and above 7.0 indicates alkaline (base).

PHOSPHORESCENT MATERIAL. A material that glows in the dark without producing any noticeable heat.

PILE TAPE. Strip of fabric tape with small nylon loops on one side. Used with hook tape as a fastener.

POLYAMIDE CLOTH. A fire-resistant synthetic cloth; also called "Nomex".

PSI. Abbreviation for pounds per square inch. See also: PSIA and PSIG.

PSIA. Abbreviation for pounds per square inch, absolute. Absolute pressure is measured from absolute zero (100% vacuum), rather than from normal, or atmospheric pressure. It equals gage pressure plus 14.696 pounds per square inch. See also: PSI and PSIG.

PSIG. Abbreviation for pounds per square inch, gage. Indicates pressure above ambient pressure, as indicated on a pressure gage vented to the atmosphere. See also: PSI and PSIA.

QUALIFIED PERSONNEL. Graduates of the Aircrew Survival Equipment School.

QUALITY ASSURANCE INSPECTION. An inspection of work by someone other than the person performing the work. Quality assurance inspections ensure that critical procedures in a job and the job as a whole are performed correctly and are not a threat to safety or function.

R. Abbreviation for radius.

RAVEL (UNRAVEL). To separate, untwist, or unwind, leaving a frayed or ragged edge. RAVEL is the preferred word to described such a condition.

REF. Abbreviation for reference.

REFURBISH. To restore to original condition.

REPAIRS, MAJOR. Repairs requiring special equipment, personnel or materials not normally available at intermediate level of maintenance.

REPAIRS, MINOR. Repairs that can be performed at organizational or intermediate levels of maintenance.

RIG. To assemble and adjust; to equip.

SAFETY TIE. Low strength thread which serves to inhibit accidental opening, discharge, or separation.

SAFETY WIRE. Low strength wire which serves to inhibit premature opening, discharge, or separation.

SCRAP. To discard, with proper authorization, item, parts or materials which are obsolete or no longer useable.

SEAM. A series of stitches joining two or more pieces of cloth.

SEAR. To melt or seal with heat, for example, to sear the end of nylon webbing one heats the end until the nylon melts and fuses. This prevents raveling.

SM&R CODES. Abbreviation for source, maintenance and recoverability codes. Comprised of three parts; a source code, a maintenance code, and a recoverability code. Refer to NAVSUPINST 4423.29 for further details.

STIRRUP. A cloth or leather strip sewn across the cuff of a pant leg to form a loop. When the pants are put on, the stirrup, which is worn under the foot, prevents, the pant leg from riding up.

STITCHES PER INCH. The number of needle penetrations where threads are interlaced, per linear inch.

STOWING. The act of putting away in a neat, orderly fashion.

SURVIVAL VEST. A vest constructed of nylon cloth and equipped with pockets and attachments for stowage of survival items.

SUIT, ANTI-EXPOSURE. A garment worn to provide protection in adverse, low temperature conditions.

SWAGE. To attach a clamping device to a cable by means of pressure. A swaging machine compresses a fitting, causing it to tightly grip the cable to which it is being attached.

TACK. To attach temporarily prior to final sewing. Also, to tie temporarily as an aid in positioning. Also, to permanently secure portions of a seat survival kit assembly together.

TAPE. A narrow, woven ribbon of cotton, linen, nylon, or other material.

TEMPLATE. A pattern or gage commonly in the form of a thin plate of cardboard, wood, or metal. It is used as a guide in the layout or cutting of flat work.

UNRAVEL. See RAVEL.

V-RING. A metal fitting shaped in the form of a closed letter V.

WAFFLE WEAVE. A type of weave used in making cloth. It has a pattern of small raised squares. The squares provided dead-air space for improved insulation.

WARNING. Indicates danger to personnel. A warning precedes the item or step to which it refers.

WARP. The threads that run parallel to the selvage edge of cloth; those that are crossed by the filling threads.

WEBBING. A strong, narrow closely-woven tape of synthetic cotton or linen fiber designed for bearing weight.

WEBBING, TUBULAR. Strong synthetic or natural fiber webbing woven in the form of a tube.

WOLVERINE FUR. A long, straight light-weight fur from the wolverine; usually dark brown and black in color. Wolverine fur does not collect moisture and frost in cold weather and is, therefore, used to trim collars and hoods on winter clothing.

X. Abbreviation for times or by; sign for multiplication.

ALPHABETICAL INDEX

Subject	Paragraph, Figure, Table Number
A	
ACR/FA-11 Crew Light	12-93, F12-9
ACR/FA-11(M) Crew Light	12-93, F12-9
Adjustment	
Helicopter Aircrew Breathing Device (HABD), SRU-40/P, SRU-40A/P, SRU-40B/P	16-65, F16-4, F16-7, F16-8
Air Sampling	6-2
Aircrew Swimmer's Harness (HBU-23/P)	14-424, F14-52
Aircrewmember's Cape	11-157, F11-33
Aircrewmember's Clipboard (MXU-163/P)	9-360, F9-42
Aircrewmember's Survival Tool Kit	9-351, F9-41
Aluminum Candle Lantern	11-166, F11-34
Aluminum Pot, 2 Quart	11-184, F11-36
Allowance Listing of Rescue and Survival Equipment	1-17
AN/CRT-3 and -3A Radio Set	13-28, F13-4
AN/PRC-90 Radio Set	13-10, F13-2
AN/PRC-112, AN/PRC-112C, AN/PRC-112B, AN/PRC-112B1 and AN/PRC-112G Survival Radios	13-18, F13-3
AN/PRC-149 and AN/PRC-149A Radio Sets	13-46
AN/PRQ-7 Combat Survivor/Evader Locator Radio Set	13-64, F13-9
AN/PRT-5 Radio Transmitting Set	13-38, F13-5
AN/URT-33A Radio Beacon Set	13-1, F13-1
AN/URT-140 Radio Beacon Set	13-56
Application	
Aircrewmember's Cape	11-161
Aircrewmember's Clipboard (MXU-163/P)	9-364
Aircrewmember's Survival Tool Kit	9-355
Aluminum Candle Lantern	11-170
Aluminum Pot, 2 Quart	11-188
Bagged Drinking Water, 4-Ounces	9-51
Chemical Heat Packs	11-143
Clear Vinyl Water Storage Bag	9-14
Cold Weather Survival Kit	
4-Man, SRU-A/P99S-1	11-5
12-Man, SRU-A/P99S-2	11-32
Combat Casualty Blanket (Type I)	9-23
Combat Casualty Blanket (Type II)	9-23
Compass	
Landmark Type 27	9-90
Lensatic Compass	9-99
Magnetic Wrist Compass	9-81
Duct Tape	11-244
Dye Marker	9-123
Fire Starter	9-265
First Aid Kits	
Panel Mounted	9-132
Rigid Case	9-132
Flash Guard Assy, SDU-5/E	12-15
Ground/Air Emergency Code Card	9-72
Hand Pump	9-293

ALPHABETICAL INDEX (Cont)

Subject	Paragraph, Figure, Table Number
A (Cont)	
Application (Cont)	
Hoisting Gloves	9-113
Ice Pick	11-224
Ice Screws	11-215
Individual Aircrewmember's Survival Kit	
SRU-31/P	9-146
SRU-31A/P	9-160
Knives	
Double Bladed Shroud Line Cutter	9-195
Hook and Snap Blade Knife Type MC-1	9-207
Hook Blade Knife	9-185
Pocket Knife	9-175
Survival Knife and Sheath	9-217
Leatherman Wave Survival Tool	9-229
Leg Restraint Garters	
Leg Restraint Garter (AV-8)	17-30, F17-8
Leg Restraint Garter (EA-6B and F-14)	17-5
Leg Restraint Garter (F/A-18C/D/E/F, F-14D and T-45A/C)	17-48
Lifeboat Matches	11-79
Lights	
2-Cell Right Angle	12-88
ACR/FA-11	12-97
ACR/FA-11(M)	12-97
Chemical Light	12-60
Cyalume Personnel Marker Light	12-79
Cyalume S.O.S. Light	12-70
Cyalume S.O.S. Signal	12-70
Distress Marker Light SDU-5/E	12-14
Distress Marker Light, SDU-39/N	12-14
Electric Sea Marker Light, SDU-36/N	14-125.1
Penlight Flashlights	12-48
Survivor Locator Light (LPP-1 and LPP-1A Life Preserver)	12-36
Type A-9	12-5
Manual Reverse Osmosis Desalinator	9-418
Mechanical Patch	9-382
Mirrors	
Emergency Signaling Mirror	9-240
Emergency Signaling Mirror, Mark 4	9-249
MK-79 MOD 0 Personnel Distress Signal Kit	9-312
MK-79 MOD 2 Personnel Distress Signal Kit	9-312
MK-124 MOD 0 Marine Smoke and Illumination Signal	9-321
Nylon Cord	9-106
Personnel-Lowering Device	9-281
Pilot's Mapstrap Kneeboard, Clipboard	9-374
Pistol Holster, Leather (Optional Equipment)	9-405
Plastic Bag	11-253
Pocket Chain Saw	9-272

ALPHABETICAL INDEX (Cont)

Subject	Paragraph, Figure, Table Number
A (Cont)	
Application (Cont)	
Pocket Cooker	11-179
Presun 15 Sunscreen	9-258
Radios	
AN/CRT-3 and -3A Radio Set	13-33
AN/PRC-90 Radio Set	13-14
AN/PRC-112, AN/PRC-112C, AN/PRC-112B, AN/PRC-112B1 and AN/PRC-112G Survival Radios	13-23
AN/PRC-149 Radio Set	13-51
AN/PRQ-7 Combat Survivor/Evader Locator Radio Set	13-75
AN/PRT-5 Radio Transmitting Set	13-41
AN/URT-33A Radio Beacon Set	13-5
AN/URT-140 Radio Beacon Set	13-60
C-12631/PRC-149 Radio Control Unit	13-51
Rationing Cup	11-197
Rations	
Ration Packets	9-303
Cold Weather Ration Packets	11-97
Rubber Tubing	11-233
Safety Belt, Crewmember's (MS16070-2,-3, -21)	8-5
Search and Rescue Kit	10-5
Self-Inflating Ground Insulator	11-134
Shelter, Lightweight Extreme Weather (P/N 2628911, P/N VE-25)	11-111
Signaling Whistles	
Signaling Whistle (MIL-W-1053)	9-336
Signaling Whistle, Classic Fox 40	9-345
Strike Force Striker	11-70
Survival Kits	
Theater Specific (Hot and Cold Weather)	9-454
Survival Saw	11-88
Telescoping Shovel	11-206
Thermal Protective Aid	11-152
Ultima Thule Sleeping Bag	11-125
Water Desalter Kit	9-61
Water Storage Bag	9-5
Water Storage Bag, Clear Vinyl	9-14
Wool Blanket	9-30
Assembly	
First-Stage Regulator (HABD, SRU-40/P, SRU-40A/P, SRU-40B/P)	16-63, F16-7
O-Ring Lubrication and Dressing (HABD, SRU-40/P, SRU-40A/P, SRU-40B/P)	16-62
Second-Stage Regulator (HABD, SRU-40/P, SRU-40A/P, SRU-40B/P)	16-64, F16-8
Attachment	
Chemlight Bar, SAR Swimmer's Mask (Wraparound and Wraparound II)	14-486
Knife Scabbard	14-430, F14-53
LPU-28 Life Preserver	14-457
Passenger Helicopter Aircrew Breathing Device Holster	
HABD Mouthpiece Cover	9-434
LPP-1 or LPP-1A Life Preserver	9-437

ALPHABETICAL INDEX (Cont)

Subject — Paragraph, Figure, Table Number

A (Cont)

Attachment (Cont)
Passenger Helicopter Aircrew Breathing Device Holster (Cont)
LPU-32/P Life Preserver 9-436
Pouch Type Preserver 9-438
TRI-SAR Harness 14-456

B

Bagged Drinking Water, 4-Oz. 9-47, F9-8
Bailing Sponge 9-327, F9-38
Basic Rappel Harness / Pro Series Rescue Harness 14-256, F14-35, F14-35A
Breathing Air Sources
Helicopter Aircrew Breathing Device (HABD, SRU-40/P, SRU-40A/P, SRU-40B/P) 16-32
Breathing Air Testing Procedures
Air Sampling 6-2
Sources for Air Testing 6-3

C

C-12631/PRC-149 Radio Control Unit 13-48
Cable Cutter 14-69, F14-9
Cable Grip 14-25, F14-2
Cable Weight Cover 14-152, F14-22
Carabiners 14-266, F14-36, F14-37
Chemical Heat Packs 11-139, F11-31
Chemical Light 12-55, F12-6
Chemical Light Strap 14-112, F14-13
Cleaning
Aircrew Swimmer's Harness (HBU-23/P) 14-439
Basic Rappel Harness 14-265
Cable Cutter 14-78
Cable Grip 14-34
Cable Weight Cover 14-161
Carabiners 14-275
Climber's Belt and Strap 14-326
Climber's Helmet and Headlamp 14-346
Climber's Spikes 14-336
Descent Control Device 14-244
Dynamic Ropes (Kernmantle) 14-295
Entrenching Tool 14-397
Helicopter Aircrew Breathing Device (HABD, SRU-40/P, SRU-40A/P, SRU-40B/P) 16-46
Helicopter Rescue Equipment Bag, P/N 1682AS100-1 14-22
Helicopter Rescue Equipment Bag, P/N 261 14-22
Hoist Quick Splice 14-56
Hoisting Sling Assembly 14-67
Hoisting Vest (Full Body Fishnet) 14-316
Knives
V-Bladed Rescue Knife 14-357

ALPHABETICAL INDEX (Cont)

Subject	Paragraph, Figure, Table Number
C (Cont)	
Cleaning (Cont)	
Leg Restraint Garters	
Leg Restraint Garter (AV-8)	17-40
Leg Restraint Garter (EA-6B and F-14)	17-15
Leg Restraint Garter (F/A-18C/D/E/F, F-14D and T-45A/C)	17-57
MEDEVAC Litter	14-185
Nylon Strap	14-306
Pneumatic Rescue Hand Tool	14-92
Quick Strop	14-151
Rappelling Ropes	14-254
Rescue Litter	14-201
Rescue Net	14-211
Rescue Pulleys	14-387
Rescue Seat (LSC P/N 420)	14-227
Rescue Strop	14-140
SAR Helicopter Aircrew Breathing Device Holster	14-463
SAR Medical Kit, Level A/B/C	14-407
SAR Signaling Sleeve	14-519
SAR Swimmer's Fins	14-509
SAR Swimmer's Mask	14-489
SAR Swimmer's Snorkel	14-499
SAR Swimmer's Wetsuit	14-476
Signaling Whistle, Fox 40	9-349
Spring Loaded Belay Plate	14-285
Sven Folding Saw	14-377
Trail Line Assembly	14-172
TRI-SAR Harness Assembly	14-421
Wool Blanket	14-111
Clear Vinyl Water Storage Bag	9-10, F9-2
Climber's Belt and Strap	14-317, F14-41
Climber's Helmet and Headlamp	14-337, F14-43
Climber's Spikes	14-327, F14-42
Cold Weather Survival Kits	
4-Man, SRU-A/P99S-1	11-1, F11-1
12-Man, SRU-A/P99S-2	11-28, F11-11
Combat Casualty Blanket (Type I)	9-19, F9-3
Combat Casualty Blanket (Type II)	9-19, F9-4
Comments and Recommendations	1-13
Compass	
Landmark Type 27	9-86, F9-13
Lensatic Compass	9-95
Magnetic Wrist Compass	9-77, F9-12
Configuration	
Aircrewmember's Cape	11-159, F11-33
Aircrewmember's Clipboard (MXU-163/P)	9-362, F9-42
Aircrewmember's Survival Tool Kit (Typ)	9-353, F9-41
Aluminum Candle Lantern	11-168, F11-34
Aluminum Pot, 2 Quart	11-186, F11-36
Bagged Drinking Water, 4-Ounces	9-49, F9-8

ALPHABETICAL INDEX (Cont)

Subject — Paragraph, Figure, Table Number

C (Cont)

Configuration (Cont)
- Chemical Heat Packs 11-141, F11-31
- Chemical Lights 12-57, F12-6
- Clear Vinyl Water Storage Bag 9-12, F9-2
- Cold Weather Survival Kit
  - 4-Man, SRU-A/P99S-1 ..... 11-3, T11-1
  - 12-Man, SRU-A/P99S-2 ..... 11-30, T11-2
- Combat Casualty Blanket (Type I) 9-21, F9-3
- Combat Casualty Blanket (Type II) 9-21, F9-4
- Compass
  - Landmark Type 27 ..... 9-88, F9-13
  - Lensatic Compass 9-97
  - Magnetic Wrist Compass 9-79, F9-12
- Duct Tape 11-242, F11-42
- Dye Marker 9-121, F9-16
- First Aid Kits
  - Panel Mounted 9-130, F9-17
  - Rigid Case 9-130, F9-18
- Ground/Air Emergency Code Card 9-70, F9-11
- Hand Pump 9-291, F9-34
- Helicopter Aircrew Breathing Device (HABD, SRU-40/P, SRU-40A/P, and SRU-40B/P) 16-5, F16-1
  - First-Stage Regulator Assembly 16-7, F16-7
  - Hose Assembly 16-9, F16-7
  - Second-Stage Regulator Assembly 16-8, F16-8
- Ice Pick 11-222, F11-40
- Ice Screws 11-213, F11-39
- Individual Aircrewmember's Survival Kit
  - SRU-31/P 9-143, F9-19, F9-20, T9-2
  - SRU-31A/P 9-157, F9-21, T9-2
- Knives
  - Double Bladed Shroud Line Cutter 9-193, F9-25
  - Hook and Snap Blade Knife Type MC-1 ..... 9-205, F9-26
  - Hook Blade Knife 9-183, F9-24
  - Pocket Knife 9-173, F9-23
  - Survival Knife and Sheath 9-215, F9-27
- Leatherman Wave Survival Tool 9-227
- Leg Restraint Garters
  - Leg Restraint Garter (AV-8) 17-28, F17-8
  - Leg Restraint Garter (EA-6B and F-14) 17-3, F17-1
  - Leg Restraint Garter (F/A-18C/D/E/F, F-14D and T-45A/C) 17-46
- Lifeboat Matches 11-77, F11-25
- Lights
  - 2-Cell Right Angle 12-86, F12-8
  - ACR/FA-11 ..... 12-95, F12-9
  - ACR/FA-11(M) 12-95, F12-9
  - Chemical Light 12-57, F12-6
  - Cyalume Personnel Marker Light 12-77
  - Cyalume S.O.S. Light 12-67, F12-7
  - Cyalume S.O.S. Signal 12-67, F12-7

ALPHABETICAL INDEX (Cont)

Subject	Paragraph, Figure, Table Number
C (Cont)	
Configuration (Cont)	
Lights (Cont)	
Distress Marker Light, SDU-39/N	12-12, F12-2
Distress Marker Light, SDU-39/N for SAR Swimmer's Only	12-31
Distress Marker Light SDU-5/E	12-12, F12-2
Penlight Flashlights	12-45, F12-5
Survivor Locator Light (LPP-1 and LPP-1A Life Preserver)	12-34, F12-4
Type A-9	12-3, F12-1
Manual Reverse Osmosis Desalinator	9-416, F9-53
Mechanical Patch	9-380, F9-44
Mirrors	
Emergency Signaling Mirror	9-238, F9-28
Emergency Signaling Mirror, Mark 4	9-247, F9-29
MK-79 MOD 0 Personnel Distress Signal Kit	9-310, F9-36
MK-79 MOD 2 Personnel Distress Signal Kit	9-310, F9-36
MK-189 MOD 0 Personnel Distress Signal Kit	9-326A3
MK-124 MOD 0 Marine Smoke and Illumination Signal	9-319, F9-37
Personnel-Lowering Device	9-279, F9-33
Pistol Holster, Leather (Optional Equipment)	9-403, F9-52
Plastic Bag	11-251, F11-43
Pocket Cooker	11-177, F11-35
Presun 15 Sunscreen	9-256, F9-30
Radios	
AN/CRT-3 and -3A Radio Set	13-30, F13-4
AN/PRC-90 Radio Set	13-12, F13-2
AN/PRC-112, AN/PRC-112C, AN/PRC-112B, AN/PRC-112B1 and AN/PRC-112G Survival Radios	13-21, F13-3
AN/PRC-149 and AN/PRC-149A Radio Sets	13-49, F13-6
AN/PRQ-7 Combat Survivor/Evader Locator Radio Set	13-73, F13-9
AN/PRT-5 Radio Transmitting Set	13-39, F13-5
AN/URT-33A Radio Beacon Set	13-3, F13-1
AN/URT-140 Radio Beacon Set	13-60
C-12631/PRC-149 Radio Control Unit	13-49, F13-7
Rationing Cup	11-195, F11-37
Rations	
Ration Packets	9-300, F9-35
Cold Weather Ration Packets	11-95, F11-27
Rubber Tubing	11-231, F11-41
Safety Belt, Crewmember's (MS16070-2,-3, -21)	8-3, F8-1
Search and Rescue Kit	10-3, F10-1, T10-1
Self-Inflating Ground Insulator	11-132, F11-30
Shelter, Lightweight Extreme Weather (P/N 2628911, P/N VE-25)	11-106, F11-28
Signaling Whistles	
Signaling Whistle (MIL-W-1053)	9-334, F9-39
Signaling Whistle, Classic Fox 40	9-343, F9-40
Strike Force Striker	11-68, F11-24
Survival Kits	
Theater Specific (Hot and Cold Weather)	9-452, T9-7, T9-8
Survival Locator Light (LPP-1/A Life Preserver)	12-35, F12-4

ALPHABETICAL INDEX (Cont)

Subject — Paragraph, Figure, Table Number

C (Cont)

Configuration (Cont)
- Survival Saw 11-86
- Telescoping Shovel 11-204, F11-38
- Thermal Protective Aid 11-150, F11-32
- Ultima Thule Sleeping Bag 11-123, F11-29
- Water Desalter Kit 9-59, F9-10
- Water Storage Bag 9-3, F9-1

Conflicts and Supersedures, Manual 1-9
Crewmember's Safety Belt (MS16070-2, -3, -21) 8-1, F8-1
Custom Fit
- SAR Swimmer's Wetsuit 14-470, F14-58

Cyalume Personnel Marker Light 12-75
Cyalume S.O.S. Light 12-65, F12-7
Cyalume S.O.S. Signal 12-65

D

Definitions 1-23
Descent Control Device 14-235, F14-34
Description
- Aircrew Swimmer's Harness (HBU-23/P) 14-424, F14-52
- Aircrewmember's Cape 11-157, F11-33
- Aircrewmember's Clipboard (MXU-163/P) 9-360, F9-42
- Aircrewmember's Survival Tool Kit 9-351, F9-41
- Aluminum Candle Lantern 11-166, F11-34
- Aluminum Pot, 2 Quart 11-184, F11-36
- AN/TS-23 Test Set 12-22, F12-3
- Bagged Drinking Water, 4-Ounces 9-47, F9-8
- Bailing Sponge 9-327, F9-38
- Basic Rappel Harness / Pro Series Rescue Harness 14-256, F14-35, F14-35A
- Cable Cutter 14-69, F14-9
- Cable Grip 14-25, F14-2
- Cable Weight Cover 14-152, F14-22
- Carabiners 14-266, F14-36, F14-37
- Chemical Heat Packs 11-139, F11-31
- Chemical Light Strap 14-112, F14-13
- Clear Vinyl Water Storage Bag 9-10, F9-2
- Climber's Belt and Strap 14-317, F14-41
- Climber's Helmet and Headlamp 14-337, F14-43
- Climber's Spikes 14-327, F14-42
- Cold Weather Survival Kit
  - 4-Man, SRU-A/P99S-1 ..... 11-1, F11-1
  - 12-Man, SRU-A/P99S-2 ..... 11-28, F11-11
- Combat Casualty Blanket (Type I) 9-19, F9-3
- Combat Casualty Blanket (Type II) 9-19, F9-4
- Compass
  - Landmark Type 27 ..... 9-86, F9-13
  - Lensatic Compass 9-95
  - Magnetic Wrist Compass 9-77, F9-12

ALPHABETICAL INDEX (Cont)

Subject	Paragraph, Figure, Table Number
D (Cont)	
Description (Cont)	
Descent Control Device	14-235, F14-34
Distress Marker Light, SDU-5/E, SDU-39/N	12-10, F12-2
Double Rescue Hook	14-38, F14-4
Duct Tape	11-240, F11-42
Dye Marker	9-119, F9-16
Dynamic Ropes (Kernmantle)	14-286
Emergency Drinking Water Supply Bottles	9-37, F9-6
Entrenching Tool	14-388, F14-48
Fire Starter	9-263, F9-31
First Aid Kits	
Panel Mounted	9-128, F9-17
Rigid Case	9-128, F9-18
Flotation Collar	14-216, F14-32
Forest Penetrator	14-216, F14-30
Ground/Air Emergency Code Card	9-68, F9-11
Hand Pump	9-289, F9-34
Helicopter Aircrew Breathing Device (HABD, SRU-40/P, SRU-40A/P, SRU-40B/P)	16-1, F16-1
Helicopter Rescue Equipment Bag, P/N 1682AS100-1	14-12, F14-1
Helicopter Rescue Equipment Bag, P/N 261	14-12, F14-1
Hoist Quick Splice	14-47, F14-6
Hoisting Gloves	9-111, F9-15, 14-93, F14-11
Hoisting Sling Assembly	14-58, F14-8
Hoisting Vest (Full Body Fishnet)	14-307, F14-40
Ice Pick	11-220, F11-40
Ice Screws	11-211, F11-39
Individual Aircrewmember's Survival Kit	
SRU-31/P	9-141, F9-19
SRU-31A/P	9-155, F9-21
Knives	
Double Bladed Shroud Line Cutter	9-191, F9-25
Hook and Snap Blade Knife Type MC-1	9-203, F9-26
Hook Blade Knife	9-181, F9-24
Pocket Knife	9-171, F9-23
Survival Knife and Sheath	9-213, F9-27
V-Bladed Rescue Knife	14-347, F14-44
Leatherman Wave Survival Tool	9-225
Leg Restraint Garters	
Leg Restraint Garter (AV-8)	17-26
Leg Restraint Garter (EA-6B and F-14)	17-1
Leg Restraint Garter (F/A-18C/D/E/F, F-14D and T-45A/C)	17-44
Lifeboat Matches	11-75, F11-25
Lights	
2-Cell Right Angle	12-84, F12-8
ACR/FA-11	12-93, F12-9
ACR/FA-11(M)	12-93, F12-9
Chemical Light	12-55, F12-6
Cyalume Personnel Marker Light	12-75
Cyalume S.O.S. Light	12-65, F12-7

ALPHABETICAL INDEX (Cont)

Subject — Paragraph, Figure, Table Number

D (Cont)

Description (Cont)
- Lights (Cont)
  - Cyalume S.O.S. Signal 12-65, F12-7
  - Distress Marker Light SDU-5/E 12-10, F12-2
  - Distress Marker Light SDU-39/N 12-10, F12-2
  - Electric Sea Marker Light, SDU-36/N 14-147, F14-19
  - Penlight Flashlights 12-43, F12-5
  - Survivor Locator Light (LPP-1 and LPP-1A Life Preserver) 12-32, F12-4
  - Type A-9 . . . . . 12-1, F12-1
- Manual Reverse Osmosis Desalinator 9-414, F9-53
- Mechanical Patch 9-378, F9-44
- MEDEVAC Litter 14-176, F14-25
- Mirrors
  - Emergency Signaling Mirror 9-236, F9-28
  - Emergency Signaling Mirror, Mark 4 . . . . . 9-245, F9-29
- MK-79 MOD 0 Personnel Distress Signal Kit 9-308, F9-36
- MK-79 MOD 2 Personnel Distress Signal Kit 9-308, F9-36
- MK-189 MOD 0 Personnel Distress Signal Kit 9-326A1, F9-34
- MK-124 MOD 0 Marine Smoke and Illumination Signal 9-317, F9-37
- NAVAIR 13-1-6.5 1-7
- Nylon Cord 9-104, F9-14
- Nylon Strap 14-297, F14-39
- Personnel-Lowering Device 9-277, F9-33
- Pilot's Mapstrap Kneeboard, Clipboard 9-372, F9-43
- Pistol Holster, Leather (Optional Equipment) 9-401, F9-52
- Plastic Bag 11-249, F11-43
- Pneumatic Rescue Hand Tool 14-79, F14-10
- Pocket Chain Saw 9-270, F9-32
- Pocket Cooker 11-175, F11-35
- Presun 15 Sunscreen 9-254, F9-30
- Quick Strop 14-142, F14-21
- Radios
  - AN/CRT-3 and -3A Radio Set 13-28, F13-4
  - AN/PRC-90 Radio 13-10, F13-2
  - AN/PRC-112, AN/PRC-112C, AN/PRC-112B, AN/PRC-112B1 and AN/PRC-112G Survival Radios 13-18, F13-3
  - AN/PRC-149 and AN/PRC-149A Radio Sets 13-46, F13-6
  - AN/PRQ-7 Combat Survivor/Evader Locator Radio Set 13-64
  - AN/PRT-5 Radio Transmitting Set 13-37, F13-5
  - AN/URT-33A Radio Beacon Set 13-1, F13-1
  - AN/URT-140 Radio Beacon Set 13-56
  - C-12631/PRC-149 Radio Control Unit 13-46, F13-7
- Rappelling Ropes 14-245
- Rationing Cup 11-193, F11-37
- Rations
  - Ration Packets 9-298, F9-35
  - Cold Weather Ration Packets 11-93, F11-27
- Relief Systems 9-388, F9-45, F9-46
- Rescue 8 . . . . . 14-358, F14-45

ALPHABETICAL INDEX (Cont)

Subject	Paragraph, Figure, Table Number
D (Cont)	
Description (Cont)	
Rescue Litter	14-192, F14-26
Rescue Mountain Boots	14-510
Rescue Net	14-202, F14-27
Rescue Pulleys	14-378, F14-47
Rescue Seat (LSC P/N 420)	14-216, F14-31
Rescue Strop	14-130, F14-20
Rubber Tubing	11-229, F11-41
SAR Helicopter Aircrew Breathing Device Holster	14-450, F14-56
SAR Medical Kit, Level A/B/C	14-398, F14-49
SAR Signaling Sleeve	14-519
SAR Swimmer's Fins	14-500, F14-61
SAR Swimmer's Mask	14-477, F14-59
SAR Swimmer's Snorkel	14-490, F14-60
SAR Swimmer's Wetsuit Ensemble	14-464, F14-57
Search and Rescue Kit	10-1, F10-1
Self-Inflating Ground Insulator	11-130, F11-30
Shelter, Lightweight Extreme Weather (P/N 2628911, P/N VE-25)	11-104, F11-28
Signaling Whistles	
Signaling Whistle (MIL-W-1053)	9-332, F9-39
Signaling Whistle, Classic Fox 40	9-341, F9-40
Spring Loaded Belay Plate	14-276, F14-38
Strike Force Striker	11-66, F11-24
Survival Kits	
Theater Specific (Hot and Cold Weather)	9-450
Sven Folding Saw	14-368, F14-46
Survival Saw	11-84, F11-26
Telescoping Shovel	11-202, F11-38
Thermal Protective Aid	11-148, F11-32
Trail Line Assembly	14-163, F14-23
TRI-SAR Harness Assembly	14-410, F14-50
Ultima Thule Sleeping Bag	11-121, F11-29
Water Bottle (Canteen)	9-42, F9-7
Water Desalter Kit	9-57, F9-10
Water Storage Bag	9-1, F9-1
Wool Blanket	9-28, F9-5, 14-102, F14-12
Disassembly	
First-Stage Regulator (HABD, SRU-40/P, SRU-40A/P, SRU-40B/P)	16-55, F16-7
Inspection of Disassembled Components (HEED, SRU-36/P)	15-96
Leg Restraint Garters	
Leg Restraint Garter (EA-6B and F-14)	17-19
Leg Restraint Garter (F/A-18C/D/E/F, F-14D and T-45A/C)	17-61
Second-Stage Regulator (HABD, SRU-40/P, SRU-40A/P, SRU-40B/P)	16-56, F16-7, F16-8
Double Bladed Shroud Line Cutter	9-191, F9-25
Double Rescue Hook	14-38, F14-4
Drawings, Engineering	1-14
Duct Tape	11-240, F11-42
Dye Marker	9-119, F9-16
Dynamic Ropes (Kernmantle)	14-286

ALPHABETICAL INDEX (Cont)

Subject	Paragraph, Figure, Table Number
E	
Emergency Drinking Water Supply Bottle	9-37, F9-6
Entrenching Tool	14-388, F14-48
F	
Fabrication	
Aircrew Swimmer's Harness (HBU-23/P)	14-440
Knife Scabbard Attaching Strap	14-442
Modified Back Strap	14-441
Right Chest Strap	14-443
Cold Weather Survival Kit	
4-Man, SRU-A/P99S-1, Equipment Bag	11-20, F11-2, F11-3, F11-4, F11-5, F11-6, F11-7, F11-8, F11-9
4-Man, SRU-A/P99S-1, Lightweight Extreme Weather Shelter Protective Cover	11-21
12-Man, SRU-A/P99S-2, Equipment Bag	11-47, F11-12, F11-13, F11-14, F11-15, F11-16
Chemical Light Strap	14-121, F14-14
Equipment Container, SAR Kit	10-21, F10-1
Equipment Container, SRU-31A/P	9-169, F9-21, F9-22
Equipment Pouch, Theater Specific (Hot and Cold Weather) Survival Kits	9-459
Hoist Quick Splice	14-57, F14-7
Leg Restraint Garters	
Leg Restraint Garter (AV-8)	17-43, F17-9
Leg Restraint Garter (EA-6B and F-14)	17-20, F17-3, F17-4, F17-5, F17-6, F17-7
Leg Restraint Garter (F/A-18C/D/E/F, F-14D and T-45A/C)	17-60
Keeper	17-61
Lower Strap	17-63
Upper Strap	17-62
Liferaft Container (SAR Kit)	10-20, F10-2, F10-3
Multi Place Life Raft (MPLR) Weak Link	14-37.9
Passenger Helicopter Aircrew Breathing Device Holster	9-428, F9-55, F9-56, F9-57
Personnel-Lowering Device	9-288, T9-5
Search and Rescue Kit	
Equipment Container	10-21, F10-5, F10-6, F10-7, F10-8, F10-9
Liferaft Container	10-20, F10-2, F10-3, F10-4
Splicing Procedures	10-22
Tethering Tab, Bagged Drinking Water, 4-Ounces	9-56, F9-9
Weak Link, Trail Line Assembly	14-175, F14-24
Filling	
Compressed Air Refill Assembly CQU-10/U	16-45
Helicopter Aircrew Breathing Device (HABD, SRU-40/P, SRU-40A/P, SRU-40B/P)	16-38, F16-1
Fire Starter	9-263, F9-31
First Aid Kits	
Panel Mounted	9-128, F9-17
Rigid Case	9-128, F9-18
Fitting	
Aircrew Swimmer's Harness (HBU-23/P)	14-428
Flashlight Type A-9	12-1, F12-1
Flotation Collar	14-216, F14-32

ALPHABETICAL INDEX (Cont)

Subject — Paragraph, Figure, Table Number

F (Cont)

Forest Penetrator 14-216, F14-30
Function
  Search and Rescue Kit 10-7

G

General Safety
  Air Compressors, (HABD, SRU-40/P, SRU-40A/P, SRU-40B/P) 16-35
  Helicopter Aircrew Breathing Device (HABD, SRU-40/P, SRU-40A/P, SRU-40B/P) 16-35, T16-2
Ground/Air Emergency Code Card 9-68, F9-11

H

H-53 Ramp Gunner's Extension Belt Sewing Procedures 8-26, F8-2, F8-3
Hand Pump 9-289, F9-34
Helicopter Aircrew Breathing Device (HABD, SRU-40/P, SRU-40A/P, and SRU-40B/P) 16-1, F16-1
Helicopter Emergency Egress Device (HEED, SRU-36/P) 15-1, F15-1
Helicopter Rescue Equipment Bag, P/N 1682AS100-1 . . . . . 14-12, F14-1
Helicopter Rescue Equipment Bag, P/N 216 . . . . . 14-12, F14-1
HGU-25 (Cranial) 14-123, F14-17
Hoist Quick Spice 14-47, F14-6
Hoisting Gloves 9-111, F9-5, 14-93, F14-11
Hoisting Sling Assembly 14-58, F14-8
Hoisting Vest (Full Body Fishnet) 14-307, F14-40

I

Ice Pick 11-220, F11-40
Ice Screw 11-211, F11-39
Illustrated Parts Breakdown
  Cable Grip 14-35, F14-3
  Double Rescue Hook 14-44, F14-5
  Forest Penetrator 14-229, F14-33
  Helicopter Aircrew Breathing Device (HABD, SRU-40/P, SRU-40A/P, SRU-40B/P) 16-69, F16-9, F16-10, F16-11, F16-12
  Rescue Net 14-213, F14-28, F14-29
Illustrated Parts Breakdown Information 2-13
  Group Assembly Parts List 2-16
  Numerical Index 2-25, T2-1
Individual Aircrewmember's Survival Kits
  SRU-31/P 9-141, F9-19
  SRU-31A/P 9-155, F9-21

ALPHABETICAL INDEX (Cont)

Subject	Paragraph, Figure, Table Number
I (Cont)	
Inspection	
Aircrew Swimmer's Harness (HBU-23/P)	14-432, T14-1
Aircrewmember's Cape	11-165
Aircrewmember's Clipboard (MXU-163/P)	9-370
Aircrewmember's Survival Tool Kit	9-359
Aluminum Candle Lantern	11-174
Aluminum Pot, 2 Quart	11-192
Bagged Drinking Water, 4-Ounces	9-55
Bailing Sponge	9-331
Basic Rappel Harness	14-261, T14-1
Cable Cutter	14-74, T14-1
Cable Grip	14-30, T14-1
Cable Weight Cover	14-157, T14-1
Carabiners	14-271, T14-1
Chemical Heat Packs	11-147
Chemical Light Strap	14-117, T14-1
Clear Vinyl Water Storage Bag	9-18
Climber's Belt and Strap	14-322, T14-1
Climber's Helmet and Headlamp	14-342, T14-1
Climber's Spikes	14-332, T14-1
Cold Weather Survival Kit	
4-Man, SRU-A/P99S-1	11-9
12-Man, SRU-A/P99S-2	11-36
Combat Casualty Blanket (Type I)	9-27
Combat Casualty Blanket (Type II)	9-27
Compass	
Landmark Type 27	9-94
Magnetic Wrist Compass	9-85
Descent Control Device	14-240, T14-1
Double Rescue Hook	14-43
Duct Tape	11-248
Dye Marker	9-127
Dynamic Ropes (Kernmantle)	14-291, T14-1
Emergency Drinking Water Supply Bottles	9-41
Entrenching Tool	14-393, T14-1
Fire Starter	9-269
First Aid Kits	
Panel Mounted	9-138
Rigid Case	9-138
Flotation Collar	14-221, T14-1
Forest Penetrator	14-221, T14-1
Ground/Air Emergency Code Card	9-76
H-53 Ramp Gunner's Extension Belt	8-28
Hand Pump	9-297
Helicopter Aircrew Breathing Device (HABD, SRU-40/P, SRU-40A/P, SRU-40B/P)	16-25
Helicopter Rescue Equipment Bag, P/N 1682AS100-1	14-18, T14-1
Helicopter Rescue Equipment Bag, P/N 261	14-18, T14-1
Hoist Quick Splice	14-52, T14-1

ALPHABETICAL INDEX (Cont)

Subject — Paragraph, Figure, Table Number

I (Cont)

Inspection (Cont)
- Hoisting Gloves . . . 9-117, 14-98, T14-1
- Hoisting Sling Assembly . . . 14-63, T14-1
- Hoisting Vest (Full Body Fishnet) . . . 14-312, T14-1
- Ice Pick . . . 11-228
- Ice Screws . . . 11-219
- Individual Aircrewmember's Survival Kit, SRU-31A/P . . . 9-166
- Issue Inspection (Leg Restraint Garters) . . . 17-14, 17-39
- Knives
  - Hook and Snap Blade Knife Type MC-1 . . . 9-211
  - Hook Blade Knife . . . 9-189
  - Pocket Knife . . . 9-179
  - Survival Knife and Sheath . . . 9-223
- V-Bladed Rescue Knife . . . 14-352, T14-1
- Leatherman Wave Survival Tool . . . 9-235
- Leg Restraint Garters
  - Leg Restraint Garter (AV-8) . . . 17-36
  - Leg Restraint Garter (EA-6B and F-14) . . . 17-11
  - Leg Restraint Garter (F/A-18C/D/E/F, F-14D and T-45A/C) . . . 17-54
- Lifeboat Matches . . . 11-83
- Lights
  - 2-Cell Right Angle . . . 12-92
  - ACR/FA-11 . . . 12-101
  - ACR/FA-11(M) . . . 12-101
  - Distress Marker Light, SDU-5/E . . . 12-20
  - Distress Marker Light, SDU-39/N . . . 12-20
  - Electric Sea Marker Light, SDU-36/N . . . 14-125.5
  - Penlight Flashlights . . . 12-54
  - Regular Standard, Right Angle Flashlight . . . 12-92
  - Survivor Locator Light (LPP-1 and LPP-1A Life Preserver) . . . 12-42
  - Type A-9 . . . 12-9
- Manual Reverse Osmosis Desalinator . . . 9-422
- Mechanical Patch . . . 9-386
- MEDEVAC Litter . . . 14-181, T14-1
- Mirrors
  - Emergency Signaling Mirror . . . 9-244
  - Emergency Signaling Mirror, Mark 4 . . . 9-253
- MK-79 MOD 0 Personnel Distress Signal Kit . . . 9-316
- MK-79 MOD 2 Personnel Distress Signal Kit . . . 9-316
- MK-189 MOD 0 Personnel Distress Signal Kit . . . 9-326A7
- MK-124 MOD 0 Marine Smoke and Illumination Signal . . . 9-325
- Multi Place Life Raft (MPLR) Weak Link . . . 14-37.1
- Nylon Cord . . . 9-110
- Nylon Strap . . . 14-302, T14-1
- Passenger Helicopter Aircrew Breathing Device Holster . . . 9-443
- Personnel-Lowering Device . . . 9-287
- Plastic Bag . . . 11-257
- Pneumatic Rescue Hand Tool . . . 14-84
- Pocket Chain Saw . . . 9-276

ALPHABETICAL INDEX (Cont)

Subject — Paragraph, Figure, Table Number

I (Cont)

Inspection (Cont)
- Pocket Cooker 11-183
- Presun 15 Sunscreen 9-262
- Quick Strop 14-147, T14-1
- Radios
  - AN/PRC-112, AN/PRC-112C, AN/PRC-112B, AN/PRC-112B1 and AN/PRC-112G Survival Radios 13-27
  - AN/PRT-5 Radio Transmitting Set 13-45
  - AN/URT-33A Radio Beacon Set 13-9
- Rappelling Ropes 14-250, T14-1
- Rationing Cup 11-201
- Rations
  - Ration Packets 9-307
  - Cold Weather Ration Packets 11-101
- Rescue 8 . . . . . 14-363, T14-1
- Rescue Litter 14-197, T14-1
- Rescue Mountain Boots 14-516, T14-1
- Rescue Net 14-207, T14-1
- Rescue Pulleys 14-383, T14-1
- Rescue Seat (LSC P/N 420) 14-221, T14-1
- Rescue Strop 14-135, T14-1
- Rubber Tubing 11-237
- Safety Belt, Crewmember's (MS16070-2, -3, -21) 8-15
- SAR Helicopter Aircrew Breathing Device Holster 14-459, T14-1
- SAR Medical Kit, Level A/B/C 14-403, T14-1
- SAR Swimmer's Fins 14-505, T14-1
- SAR Swimmer's Mask 14-482, T14-1
- SAR Swimmer's Snorkel 14-495, T14-1
- SAR Swimmer's Wetsuit 14-472, T14-1
- Search and Rescue Kit 10-15
- Self-Inflating Ground Insulator 11-138
- Shelter, Lightweight Extreme Weather (P/N 2628911, P/N VE-25) 11-115
- Signaling Whistles
  - Signaling Whistle (MIL-W-1053) 9-340
  - Signaling Whistle, Classic Fox 40 9-350
- Spring Loaded Belay Plate 14-281, T14-1
- Strike Force Striker 11-74
- Sven Folding Saw 14-373, T14-1
- Survival Saw 11-92
- Telescoping Shovel 11-210
- Thermal Protective Aid 11-156
- Trail Line Assembly 14-168, T14-1
- TRI-SAR Harness Assembly 14-415, T14-1
- Ultima Thule Sleeping Bag 11-129
- Water Bottle (Canteen) 9-46
- Water Desalter Kit 9-65
- Water Storage Bag 9-9
- Wool Blanket 14-107, T14-1

ALPHABETICAL INDEX (Cont)

Subject	Paragraph, Figure, Table Number
I (Cont)	
Inspection, 90-Day	
Helicopter Aircrew Breathing Device (HABD, SRU-40/P, SRU-40A/P, SRU-40B/P)	16-30, F16-2, F16-4, F16-8
Passenger Helicopter Aircrew Breathing Device Holster	9-449
Rubber Tubing	11-239
TRI-SAR Harness Assembly	14-418
Inspection, 360-Day	
Cold Weather Survival Kit	
4-Man, SRU-A/P99S-1	11-12
12-Man, SRU-A/P99S-2	11-39
Helicopter Aircrew Breathing Device (HABD, SRU-40/P, SRU-40A/P, SRU-40B/P)	16-31
Passenger Helicopter Aircrew Breathing Device Holster	9-449
Shelter, Lightweight Extreme Weather (P/N 2628911, P/N VE-25)	11-120
Inspection, Calendar	
Leg Restraint Garters	
Leg Restraint Garter (EA-6B and F-14)	17-13
Leg Restraint Garter (AV-8)	17-38
Search and Rescue Kit	10-18
Inspection Cycles	2-6
Inspection, Contamination	
Aircrew Swimmer's Harness (HBU-23/P)	14-437
TRI-SAR Harness Assembly	14-420
Inspection, Daily	
Leg Restraint Garter (F/A-18C/D/E/F, F-14D and T-45A/C)	17-55
Inspection, Issue	
Leg Restraint Garters	
Leg Restraint Garter (AV-8)	17-39
Leg Restraint Garter (EA-6B and F-14)	17-14
Inspection, Markings	
Safety Belts, Crewmember's (MS16070-2,-3, -21)	8-21, T8-3
Inspection, Place-In-Service	
Aircrew Swimmer's Harness (HBU-23/P)	14-433
Basic Rappel Harness	14-262
Cable Cutter	14-75
Cable Grip	14-31
Cable Weight Cover	14-158
Carabiners	14-272
Chemical Light Strap	14-118
Cold Weather Rations Packets	11-102
Cold Weather Survival Kit	
4-Man, SRU-A/P99S-1	11-12
12-Man, SRU-A/P99S-2	11-39
Climber's Belt and Strap	14-323
Climber's Helmet and Headlamp	14-343
Climber's Spikes	14-333
Descent Control Device	14-241
Dynamic Ropes (Kernmantle)	14-292
Entrenching Tool	14-394
Flotation Collar	14-222

ALPHABETICAL INDEX (Cont)

Subject — Paragraph, Figure, Table Number

I (Cont)

Inspection, Place-In-Service (Cont)
- Forest Penetrator 14-222
- Helicopter Aircrew Breathing Device (HABD, SRU-40/P, SRU-40A/P, SRU-40B/P) 16-27, F16-2
- Helicopter Rescue Equipment Bag, P/N 1682AS100-1 14-19
- Helicopter Rescue Equipment Bag, P/N 261 14-19
- Hoist Quick Splice 14-53
- Hoisting Gloves 14-99
- Hoisting Sling Assembly 14-64
- Hoisting Vest (Full Body Fishnet) 14-313
- Knives
  - V-Bladed Rescue Knife 14-353
- Leg Restraint Garter (F/A-18C/D/E/F, F-14D and T-45A/C) 17-56
- MEDEVAC Litter 14-182
- Nylon Strap 14-303
- Passenger Helicopter Aircrew Breathing Device Holster 9-444
- Pneumatic Rescue Hand Tool 14-85
- Quick Strop 14-148
- Rappelling Ropes 14-251
- Relief Systems 9-392
- Rescue 8 14-364
- Rescue Litter 14-198
- Rescue Mountain Boots 14-517
- Rescue Net 14-208
- Rescue Pulleys 14-384
- Rescue Seat (LSC P/N 420) 14-222
- Rescue Strop 14-136
- Rubber Tubing 11-238
- Safety Belt, Crewmember's (MS16070-2, -3, -21) 8-17
- SAR Helicopter Aircrew Breathing Device Holster 14-460
- SAR Medical Kit, Level A/B/C 14-404
- SAR Signaling Sleeve 14-524
- SAR Swimmer's Fins 14-506
- SAR Swimmer's Mask 14-483
- SAR Swimmer's Snorkel 14-496
- SAR Swimmer's Wetsuit 14-473
- Shelter, Lightweight Extreme Weather
  - 2628911 11-116
  - VE-25 11-117
- Spring Loaded Belay Plate 14-282
- Sven Folding Saw 14-374
- Trail Line Assembly 14-169
- TRI-SAR Harness Assembly 14-416
- Wool Blanket 14-108

Inspection, Postflight
- Cold Weather Survival Kit
  - 4-Man, SRU-A/P99S-1 11-10
  - 12-Man, SRU-A/P99S-2 11-37
- Helicopter Aircrew Breathing Device (HABD, SRU-40/P, SRU-40A/P, SRU-40B/P) 16-29, F16-5
- Passenger Helicopter Aircrew Breathing Device Holster 9-448

ALPHABETICAL INDEX (Cont)

Subject — Paragraph, Figure, Table Number

I (Cont)

Inspection, Postflight (Cont)
- Shelter, Lightweight Extreme Weather (P/N 2628911, P/N VE-25) 11-118
- TRI-SAR Harness Assembly 14-417

Inspection, Preflight
- Cold Weather Survival Kit
  - 4-Man, SRU-A/P99S-1 11-10
  - 12-Man, SRU-A/P99S-2 11-37
- Helicopter Aircrew Breathing Device (HABD, SRU-40/P, SRU-40A/P, SRU-40B/P) 16-28, F16-3, F16-4
- Leg Restraint Garters
  - Leg Restraint Garter (AV-8) 17-37
  - Leg Restraint Garter (EA-6B and F-14) 17-12
- Passenger Helicopter Aircrew Breathing Device Holster 9-446
  - Passengers 9-447
- Pistol Holster, Leather (Optional Equipment) 9-409
- Search and Rescue Kit 10-16
- Shelter, Lightweight Extreme Weather (P/N 2628911, P/N VE-25) 11-118
- TRI-SAR Harness Assembly 14-417

Inspection, Special
- Aircrew Swimmer's Harness (HBU-23/P) 14-434
- Basic Rappel Harness 14-263
- Cable Cutter 14-76
- Cable Grip 14-32
- Cable Weight Cover 14-159
- Carabiners 14-273
- Chemical Light Strap 14-119
- Climber's Belt and Strap 14-324
- Climber's Helmet and Headlamp 14-344
- Climber's Spikes 14-334
- Cold Weather Survival Kit
  - 4-Man, SRU-A/P99S-1 11-11
  - 12-Man, SRU-A/P99S-2 11-38
- Compass
  - Lensatic Compass 9-103
- Descent Control Device 14-242
- Dynamic Ropes (Kernmantle) 14-293
- Entrenching Tool 14-395
- Flotation Collar 14-223
- Forest Penetrator 14-223
- Helicopter Rescue Equipment Bag, P/N 1682AS100-1 14-20
- Helicopter Rescue Equipment Bag, P/N 261 14-20
- Hoisting Gloves 9-118, 14-100
- Hoisting Sling Assembly 14-65
- Hoisting Vest (Full Body Fishnet) 14-314
- Hoist Quick Splice 14-54
- Individual Aircrewmember's Survival Kit, SRU-31/P 9-152
- Knives
  - Double Bladed Shroud Line Cutter 9-201, F9-25
  - V-Bladed Rescue Knife 14-354
- Leg Restraint Garter (F/A-18C/D/E/F, F-14D and T-45A/C) 17-55

ALPHABETICAL INDEX (Cont)

Subject — Paragraph, Figure, Table Number

I (Cont)

Inspection, Special (Cont)
- Lights
  - Chemical Lights 12-64
  - Distress Marker Light, SDU-5/E 12-21
  - Distress Marker Light, SDU-39/N 12-21
- MEDEVAC Litter 14-183
- Nylon Strap 14-304
- Pistol Holster, Leather (Optional Equipment) 9-410
- Pneumatic Rescue Hand Tool 14-86
- Quick Strop 14-149, T14-5
- Rappelling Ropes 14-252
- Rescue 8 14-365
- Rescue Litter 14-199
- Rescue Mountain Boots 14-518
- Rescue Net 14-209
- Rescue Pulleys 14-385
- Rescue Seat (LSC P/N 420) 14-223
- Rescue Strop 14-137
- Safety Belt, Crewmember's (MS16070-2, -3, -21) 8-18
- SAR Helicopter Aircrew Breathing Device Holster 14-461
- SAR Medical Kit, Level A/B/C 14-405
- SAR Signaling Sleeve 14-525
- SAR Swimmer's Fins 14-507
- SAR Swimmer's Mask 14-484
- SAR Swimmer's Snorkel 14-497
- SAR Swimmer's Wetsuit 14-474
- Search and Rescue Kit 10-17
- Shelter, Lightweight Extreme Weather (P/N 2628911, P/N VE-25) 11-119
- Spring Loaded Belay Plate 14-283
- Survival Kits
  - Theater Specific (Hot and Cold Weather) 9-458
- Sven Folding Saw 14-375
- Trail Line Assembly 14-170
- Wool Blanket 9-35, 14-109

Inspection, Visual
- Aircrew Swimmer's Harness (HBU-23/P) 14-435
- Cold Weather Ration Packets 11-103
- Lights
  - Cyalume Personnel Marker Light 12-83
  - Cyalume S.O.S. Light 12-74
  - Cyalume S.O.S. Signal 12-74
- Wool Blanket 9-36

Installation
- AN/TS-23 Test Set Battery 12-23
- HABD into Holster 14-455
- Hook Tape to the Distress Marker Light
  - SDU-5/E 12-29
  - SDU-39/N 12-29

ALPHABETICAL INDEX (Cont)

Subject	Paragraph, Figure, Table Number
I (Cont)	
Installation (Cont)	
Masking to Distress Marker Light SDU-5/E	12-28
Protective Tubes on Sunscreen Ointment/Insect Repellent and Eye Ointment Tubes	9-154
Safety Wire to Battery Cap (Aircrewmember's Clipboard)	9-371
Tethering Tab, Bagged Drinking Water, 4-Ounces	9-56, F9-9
Webbing Retarder Springs (Crewmember's Aircraft Safety Belt, MS16070-2)	8-2
J	
K	
Knives	
Double Bladed Shroud Line Cutter	9-191, F9-25
Hook and Snap Blade Knife Type MC-1	9-203, F9-26
Hook Blade Knife	9-181, F9-24
Pocket Knife	9-171, F9-23
Survival Knife	9-213, F9-27
V-Bladed Rescue Knife	14-347, F14-44
L	
Leatherman Wave Survival Tool	9-225
Leg Restraint Garters	
Leg Restraint Garter (AV-8)	17-26, F17-8
Leg Restraint Garter (EA-6B and F-14)	17-1, F17-1
Leg Restraint Garter (F/A-18C/D/E/F, F-14D and T-45A/C)	17-44
Levels of Maintenance	1-19
Lifeboat Matches	11-75, F11-25
Liferaft, Folding, LRU-13/A	F10-15
Liferaft Container, LRU-13/A	
Bottom Panel Assembly	F10-3
P-3 SAR Kit	F10-4
Top Panel Assembly	F10-2
Lights	
2-Cell, Right Angle	12-84, F12-8
ACR/FA-11	12-93, F12-9
ACR/FA-11(M)	12-93, F12-9
Chemical Lights	12-55, F12-6
Cyalume Personnel Marker Light	12-75
Cyalume S.O.S. Lights	12-65, F12-7
Cyalume S.O.S. Signal	12-65
Distress Marker Light, SDU-5/E	12-10, F12-2
Distress Marker Light, SDU-39/N	12-10, F12-2
Penlight Flashlights	12-43, F12-5

ALPHABETICAL INDEX (Cont)

Subject	Paragraph, Figure, Table Number
L (Cont)	
Lights (Cont)	
Survivor Locator Light (LPP-1 and LPP-1A Life Preserver)	12-32, F12-4
Type A-9	12-1, F12-1
LPP-1/A Life Preserver Assembly	14-128, F14-19
LPU-28/P Life Preserver Assembly	14-446, F14-54
LPU-32/P Life Preserver Assembly	14-128, F14-18
M	
Maintenance	
Aircrew Swimmer's Harness (HBU-23/P)	14-431
Aircrewmember's Cape	11-163
Aircrewmember's Clipboard (MXU-163/P)	9-368, T9-6
Aircrewmember's Survival Tool Kit	9-357
Aluminum Candle Lantern	11-172
Aluminum Pot, 2 Quart	11-190
Bagged Drinking Water, 4-Ounces	9-53
Bailing Sponge	9-329
Basic Rappel Harness	14-260
Cable Cutter	14-73
Cable Grip	14-29
Cable Weight Cover	14-156
Carabiners	14-270
Chemical Heat Packs	11-145
Chemical Light Strap	14-116
Clear Vinyl Water Storage Bag	9-16
Climber's Belt and Strap	14-321
Climber's Helmet and Headlamp	14-341
Climber's Spikes	14-331
Cold Weather Survival Kit	
4-Man, SRU-A/P99S-1	11-7
12-Man, SRU-A/P99S-2	11-34
Combat Casualty Blanket (Type I)	9-25
Combat Casualty Blanket (Type II)	9-25
Compass	
Landmark Type 27	9-92
Lensatic Compass	9-101
Magnetic Wrist Compass	9-83
Descent Control Device	14-239
Double Rescue Hook	14-42
Duct Tape	11-246
Dye Marker	9-125
Dynamic Ropes (Kernmantle)	14-290
Emergency Drinking Water Supply Bottles	9-39
Entrenching Tool	14-392
Fire Starter	9-267

ALPHABETICAL INDEX (Cont)

Subject	Paragraph, Figure, Table Number
M	
Maintenance (Cont)	
First Aid Kits	
Panel Mounted	9-136, T9-1
Rigid Case	9-136, T9-1
Flotation Collar	14-220
Forest Penetrator	14-220
Ground/Air Emergency Code Card	9-74
Hand Pump	9-295
Helicopter Aircrew Breathing Device (HABD, SRU-40/P, SRU-40A/P, SRU-40B/P)	16-6, T16-2
Helicopter Rescue Equipment Bag, P/N 1682AS100-1	14-17
Helicopter Rescue Equipment Bag, P/N 261	14-17
Hoist Quick Splice	14-51
Hoisting Gloves	9-115, 14-97
Hoisting Sling Assembly	14-62
Hoisting Vest (Full Body Fishnet)	14-311
Ice Pick	11-226
Ice Screws	11-217
Individual Aircrewmember's Survival Kit	
SRU-31/P	9-150, T9-3
SRU-31A/P	9-164, T9-4
Knives	
Double Bladed Shroud Line Cutter	9-199
Hook and Snap Blade Knife Type MC-1	9-209
Hook Blade Knife	9-187
Pocket Knife	9-177
Survival Knife and Sheath	9-221
V-Bladed Rescue Knife	14-351
Leatherman Wave Survival Tool	9-233
Leg Restraint Garters	
Leg Restraint Garter (AV-8)	17-34
Leg Restraint Garter (EA-6B and F-14)	17-9
Leg Restraint Garter (F/A-18C/D/E/F, F-14D and T-45A/C)	17-52, T17-3
Lifeboat Matches	11-81
Lights	
2-Cell Right Angle	12-90
ACR/FA-11	12-99
ACR/FA-11(M)	12-99
Chemical Light	12-62
Cyalume Personnel Marker Light	12-81
Cyalume S.O.S. Light	12-72
Cyalume S.O.S. Signal	12-72
Distress Marker Light, SDU-5/E	12-18
Distress Marker Light, SDU-39/N	12-18
Electric Sea Marker Light, SDU-36N	14-125.3
Penlight Flashlights	12-52
Survivor Locator Light (LPP-1 and LPP-1A Life Preserver)	12-40
Type A-9	12-7
Manual Reverse Osmosis Desalinator	9-420
Mechanical Patch	9-384

ALPHABETICAL INDEX (Cont)

Subject — Paragraph, Figure, Table Number

M (Cont)

Maintenance (Cont)
- MEDEVAC Litter 14-180
- Mirrors
  - Emergency Signaling Mirror 9-242
  - Emergency Signaling Mirror, Mark 4 9-251
- MK-79 MOD 0 Personnel Distress Signal Kit 9-314
- MK-79 MOD 2 Personnel Distress Signal Kit 9-314
- MK-189 MOD 0 Personnel Distress Signal Kit 9-326A5
- MK-124 MOD 0 Marine Smoke and Illumination Signal 9-323
- Multi Place Life Raft (MPLR) Weak Link 14-37.3
- Nylon Cord 9-108
- Nylon Strap 14-301
- Passenger Helicopter Aircrew Breathing Device Holster 9-441
- Personnel-Lowering Device 9-285, T9-5
- Pilot's Mapstrap Kneeboard, Clipboard 9-376
- Pistol Holster, Leather (Optional Equipment) 9-407
- Plastic Bag 11-255
- Pneumatic Rescue Hand Tool 14-83
- Pocket Chain Saw 9-274
- Pocket Cooker 11-181
- Presun 15 Sunscreen 9-260
- Quick Strop 14-146
- Radios
  - AN/CRT-3 and -3A Radio Set 13-35
  - AN/PRC-90 Radio Set 13-16
  - AN/PRC-112, AN/PRC-112C, AN/PRC-112B, AN/PRC-112B1 and AN/PRC-112G Survival Radios 13-25
  - AN/PRC-149 and AN/PRC-149A Radio Sets 13-54
  - AN/PRQ-7 Combat Survivor/Evader Locator Radio Sets 13-77
  - AN/PRT-5 Radio Transmitting Set 13-43
  - AN/URT-33A Radio Beacon Set 13-7
  - AN/URT-140 Radio Beacon Set 13-62
  - C-12631/PRC-149 Radio Control Unit 13-54
- Rappelling Ropes 14-249
- Rationing Cup 11-199
- Rations
  - Ration Packets 9-305
  - Cold Weather Ration Packets 11-99
- Relief Systems 9-390
- Rescue 8 14-362
- Rescue Litter 14-196
- Rescue Mountain Boots 14-514
- Rescue Net 14-206
- Rescue Pulleys 14-382
- Rescue Seat (LSC P/N 420) 14-220
- Rescue Strop 14-134
- Rubber Tubing 11-235
- Safety Belt, Crewmember's (MS16070-2, -3, -21) 8-13

ALPHABETICAL INDEX (Cont)

Subject — Paragraph, Figure, Table Number

M (Cont)

Maintenance (Cont)
- SAR Helicopter Aircrew Breathing Device Holster 14-458
- SAR Medical Kit, Level A/B/C 14-402
- SAR Signaling Sleeve 14-522
- SAR Swimmer's Fins 14-504
- SAR Swimmer's Mask 14-481
- SAR Swimmer's Snorkel 14-494
- SAR Swimmer's Wetsuit 14-471
- Search and Rescue Kit 10-13
- Search and Rescue (SAR) Equipment 14-3, T14-1
- Self-Inflating Ground Insulator 11-136
- Shelter, Lightweight Extreme Weather 11-113
- Signaling Whistles
  - Signaling Whistle (MIL-W-1053) 9-338
  - Signaling Whistle, Classic Fox 40 9-347
- Spring Loaded Belay Plate 14-280
- Strike Force Striker 11-72
- Survival Kits
  - Theater Specific (Hot and Cold Weather) 9-456
- Sven Folding Saw 14-372
- Survival Saw 11-90
- Telescoping Shovel 11-208
- Thermal Protective Aid 11-154
- Trail Line Assembly 14-167
- TRI-SAR Harness Assembly 14-414
- Ultima Thule Sleeping Bag 11-127
- Water Bottle (Canteen) 9-44
- Water Desalter Kit 9-63
- Water Storage Bag 9-7
- Wool Blanket 9-32, 14-106

Maintenance Actions, Documenting 2-11
Maintenance Concepts 2-1
Maintenance Documents 2-10
Maintenance, Levels of 1-19
Maintenance, Scheduling 2-5
Manual Reverse Osmosis Desalinator 9-414, F9-53
Markings
- Aircrew Swimmer's Harness (HBU-23/P) 14-428
- Cable Weight Cover 14-162, T14-6
- Flotation Collar 14-228, T14-8
- Forest Penetrator 14-228, T14-7
- Rescue Seat (LSC P/N 420) 14-228, T14-9
- Rescue Strop 14-139, T14-3, T14-4
- Safety Belt T8-3

Mechanical Patch 9-378, F9-44
MEDEVAC Litter 14-176, F14-25
Mirrors
- Emergency Signaling Mirror 9-236, F9-28
- Emergency Signaling Mirror, Mark 4 ..... 9-245, F9-29

ALPHABETICAL INDEX (Cont)

Subject	Paragraph, Figure, Table Number
M (Cont)	
MK-79 MOD 0 Personnel Distress Signal Kit	9-308, F9-36
MK-79 MOD 2 Personnel Distress Signal Kit	9-308, F9-36
MK-124 MOD 0 Marine Smoke and Illumination Signal	9-317, F9-37
MK-189 MOD 0 Personnel Distress Signal Kit	9-326A1
Modifications	
Aircrew Swimmer's Harness (HBU-23/P)	14-426
Aircrewmember's Clipboard (MXU-163/P)	9-366
Basic Rappel Harness	14-258
Cable Cutter	14-71
Cable Grip	14-27
Cable Weight Cover	14-154
Carabiners	14-268
Chemical Light Strap	14-114
Climber's Belt and Strap	14-319
Climber's Spikes	14-329
Climber's Helmet and Headlamp	14-339
Crewmember's Aircraft Safety Belt Latch Mechanism	8-9, F8-1
Crewmember's Aircraft Safety Belt End Stop	8-10, F8-1
First Aid Kits	
Panel Mounted	9-134
Rigid Case	9-134
Flotation Collar	14-218
FOD Hazards, Penlight Flashlights	12-51
Forest Penetrator	14-218
Helicopter Aircrew Breathing Device	16-15
Helicopter Rescue Equipment Bag, P/N 1682AS100-1	14-15
Helicopter Rescue Equipment Bag, P/N 261	14-15
Hoist Quick Splice	14-49
Hoisting Gloves	14-95
Hoisting Sling Assembly	14-60
Hoisting Vest (Full Body Fishnet)	14-309
Individual Aircrewmember's Survival Kit	
SRU-31/P	9-148
SRU-31A/P	9-162
Knives	
Double Bladed Shroud Line Cutter	9-197
Survival Knife and Sheath	9-219
V-Bladed Rescue Knife	14-349
Leatherman Wave Survival Tool	9-231
Leg Restraint Garters	
Leg Restraint Garter (AV-8)	17-32, T17-2
Leg Restraint Garter (EA-6B and F-14)	17-7, T17-1
Leg Restraint Garter (F/A-18C/D/E/F, F-14D and T-45A/C)	17-50
Lights	
Distress Marker Light, SDU-5/E	12-16
Distress Marker Light, SDU-39/N	12-16
Penlight Flashlights	12-50
Survivor Locator Light (LPP-1 and LPP-1A Life Preserver)	12-38

ALPHABETICAL INDEX (Cont)

Subject — Paragraph, Figure, Table Number

M (Cont)

Modifications (Cont)
- MEDEVAC Litter 14-178
- Nylon Strap 14-299
- Personnel-Lowering Device 9-283
- Pneumatic Rescue Hand Tool 14-81
- Quick Strop 14-144
- Rappelling Ropes 14-247
- Rescue 8 14-360
- Rescue Mountain Boots 14-512
- Rescue Net 14-204
- Rescue Pulleys 14-380
- Rescue Seat (LSC P/N 420) 14-218
- Rescue Strop 14-132, T14-2
- Safety Belt, Crewmember's (MS16070-2, -3, -21) 8-7
  - Chest Strap Extension 8-11, T8-2
  - End Stop 8-10, T8-2
  - Latch Mechanism 8-9, T8-2
  - Webbing Retarder Spring 8-12, T8-2
- SAR Helicopter Aircrew Breathing Device Holster 14-452
- SAR Medical Kit, Level A/B/C 14-400
- SAR Signaling Sleeve 14-521
- SAR Swimmer's Fins 14-502
- SAR Swimmer's Mask 14-479
- SAR Swimmer's Snorkel 14-492
- SAR Swimmer's Wetsuit 14-466
- Search and Rescue Kits 10-11, T10-3
- Spring Loaded Belay Plate 14-278
- Sven Folding Saw 14-370
- Trail Line Assembly 14-165
- TRI-SAR Harness Assembly 14-412
- Water Desalter Kit 9-66, F9-10
- Wool Blanket 14-104

Modifications, Recording 2-11
Multi Place Life Raft (MPLR) Weak Link 14-37.1

N

Naval Aviation Maintenance Program 2-2
Nylon Cord 9-104, F9-14
Nylon Strap 14-297, F14-39

O

Operation
- Mechanical Patch 9-387

ALPHABETICAL INDEX (Cont)

Subject	Paragraph, Figure, Table Number
P	
Packing	
Manual Reverse Osmosis Desalinator	9-423
MK-124 MOD 0 Marine Smoke and Illumination Signal	9-325
Rescue Net	14-212
Survival Items (SRU-31A/P)	9-170
Trail Line Assembly	14-173
Passenger Helicopter Aircrew Breathing Device Holster	9-426, F9-54
Penlight Flashlights	12-43, F12-5
Personnel-Lowering Device	9-277, F9-33
Pilot's Mapstrap Kneeboard Clipboard	9-372, F9-43
Pistol Holster, Leather (Optional Equipment)	9-401, F9-52
Plastic Bag	11-249, F11-43
Pneumatic Rescue Hand Tool	14-79, F14-10
Pocket Chain Saw	9-270, F9-32
Pocket Cooker	11-175, F11-35
Presun 15 Sunscreen	9-254, F9-30
Purging	
Helicopter Aircrew Breathing Device (HABD, SRU-40/P, SRU-40A/P, SRU-40B/P)	16-43, F16-3, F16-5, F16-6, T16-2
Q	
Quality Assurance	1-16
Qualified Personnel	2-4
Quick Strop	14-142, F14-21
R	
Radios	
AN/CRT-3 and -3A Radio Set	13-28
AN/PRC-90 Radio Set	13-10
AN/PRC-112, AN/PRC-112C, AN/PRC-112B, AN/PRC-112B1 and AN/PRC-112G Survival Radios	13-18
AN/PRC-149 and AN/PRC-149A Radio Sets	13-46
AN/PRQ-7 Combat Survivor/Evader Locator Radio Set	13-64
AN/PRT-5 Radio Transmitting Set	13-37
AN/URT-33A Radio Beacon Set	13-1
AN/URT-140 Radio Beacon Set	13-56
C-12631/PRC-149 Radio Control Unit	13-46
Rappelling Ropes	14-245
Rationing Cup	11-193, F11-37
Rations	
Ration Packets	9-298, F9-35
Cold Weather Ration Packets	11-93, F11-27
Reference Number, Items and Supply Data	
Search and Rescue Kit	10-9, T10-2
Helicopter Aircrew Breathing Device (HABD, SRU-40/P, SRU-40A/P, SRU-40B/P)	16-12
Regular Standard, Right Angle, Flashlight	12-84, F12-8

ALPHABETICAL INDEX (Cont)

Subject — Paragraph, Figure, Table Number

R (Cont)

Relief Systems 9-388, F9-45, F9-46
Repair
- Aircrew Swimmer's Harness (HBU-23/P) 14-438
- Aircrewmember's Clipboard (MXU-163/P) T9-6
- Basic Rappel Harness 14-264
- Cable Grip 14-33
- Cable Weight Cover 14-160
- Carabiners 14-274
- Chemical Light Strap 14-120
- Climber's Belt and Strap 14-325
- Climber's Spikes 14-335
- Climber's Helmet and Headlamp 14-345
- Cold Weather Survival Kit, 4-Man, SRU-A/P99S-1
  - Holes or Tears in Equipment Container Bag 11-14
  - Loose and/or Broken Stitches in Equipment Container Bag 11-15
  - Torn/Worn or Frayed Webbing or Tape 11-16
- Cold Weather Survival Kit, 12-Man, SRU-A/P99S-2
  - Holes or Tears in Equipment Container Bag 11-41
  - Loose and/or Broken Stitches in Equipment Container Bag 11-42
  - Torn/Worn or Frayed Webbing or Tape 11-43
- Descent Control Device 14-243
- Distress Marker Light (SDU-5/E, SDU-39/N) T12-1
- Dynamic Ropes (Kernmantle) 14-294
- Electric Sea Marker Light, SDU-36/N 14-125.7
- Entrenching Tool 14-396
- Flotation Collar 14-224
- Forest Penetrator 14-224
- Helicopter Rescue Equipment Bag, P/N 1682AS100-1 14-21
- Helicopter Rescue Equipment Bag, P/N 261 14-21
- Hoist Quick Splice 14-55
- Hoisting Gloves 14-101
- Hoisting Sling Assembly 14-66
- Hoisting Vest (Full Body Fishnet) 14-315
- Knives
  - V-Bladed Rescue Knife 14-355
- Individual Aircrewmember's Survival Kit, SRU-31/P 9-153
- Leg Restraint Garters
  - Leg Restraint Garter (AV-8) 17-41
  - Leg Restraint Garter (EA-6B and F-14) 17-16, F17-2
  - Leg Restraint Garter (F/A-18C/D/E/F, F-14D and T-45A/C) 17-59
- Manual Reverse Osmosis Desalinator 9-424
- MEDEVAC Litter 14-184
- Multi Place Life Raft (MPLR) Weak Link 14-37.7
- Nylon Strap 14-305
- Personnel-Lowering Device T9-5
- Pistol Holster, Leather (Optional Equipment) 9-411
- Pneumatic Rescue Hand Tool 14-91
- Quick Strop 14-150
- Rappelling Ropes 14-253

ALPHABETICAL INDEX (Cont)

Subject	Paragraph, Figure, Table Number
R (Cont)	
Repair (Cont)	
Rescue 8	14-366
Rescue Litter	14-200
Rescue Net	14-210
Rescue Pulleys	14-386
Rescue Seat (LSC P/N 420)	14-224, T14-10
Rescue Strop	14-138
Safety Belt, Crewmember's (MS16070-2,-3, -21)	8-19
SAR Helicopter Aircrew Breathing Device Holster	14-462
SAR Medical Kit, Level A/B/C	14-406
SAR Signaling Sleeve	14-526
SAR Swimmer's Fins	14-508
SAR Swimmer's Mask	14-485
SAR Swimmer's Snorkel	14-498
SAR Swimmer's Wetsuit	14-475
Search and Rescue Kit	T10-3
Spring Loaded Belay Plate	14-284
Sven Folding Saw	14-376
Tethering Tab, 4-Oz. Bagged Water	9-56, F9-9
Torn Hook and Pile Fastener Tapes	
Individual Aircrewmember's Survival Kit, SRU-31A/P	9-167
Trail Line Assembly	14-171
Wool Blanket	14-110
Replacement	
AN/TS-23 Test Set Battery	12-24
Blades	
Double Bladed Shroud Line Cutter	9-202
V-Bladed Rescue Knife	14-356
Chemlight Bar (Wraparound and Wraparound II)	14-486
Chemlight Clamp (Sherwood Magnum 4)	14-487
Cold Weather Survival Kit, 4-Man, SRU-A/P99S-1	
Slide Fasteners	11-18
Snap Hooks	11-17
Cold Weather Survival Kit, 12-Man, SRU-A/P99S-2	
Slide Fasteners	11-45
Snap Hooks	11-44
Head Strap and Clips, SAR Swimmer's Mask	14-488
Indicator Pin (HABD, SRU-40/P, SRU-40A/P, SRU-40B/P)	16-57, F16-7
MEDEVAC Litter (Nylon Frame Cover)	14-186
Right Chest Strap, Aircrew Swimmer's Harness (HBU-23/P)	14-443
Weak Link, Trail Line Assembly	14-174, F14-24
Replenishing Air Cylinder	
Filling HABD Air Cylinder (SRU-40/P, SRU-40A/P, SRU-40B/P)	16-43, F16-3, F16-5, F16-6, T16-3
Topping-off HABD Air Cylinder (SRU-40/P, SRU-40A/P, SRU-40B/P)	16-41, F16-3, F16-5, F16-6, T16-2
Topping-off Requirement (HABD, SRU-40/P, SRU-40A/P, SRU-40B/P)	16-40
Rescue 8	14-358, F14-45
Rescue Litter	14-192, F14-26
Rescue Mountain Boots	14-510
Rescue Net	14-202, F14-27

ALPHABETICAL INDEX (Cont)

Subject	Paragraph, Figure, Table Number
R (Cont)	
Rescue Pulleys	14-378, F14-47
Rescue Seat (LSC P/N 420)	14-216, F14-31
Rescue Strop	14-130, F14-20
Retaining Line (SAR Kit)	
Attachment	10-24, F10-10
Routing of Retaining Line to Liferaft (MK-7)	F10-12
Routing of Retaining Line to Liferaft (LRU-13/A)	F10-13
Rigging and Packing	
Aircrew Swimmer's Harness (HBU-23/P)	14-444
Cold Weather Survival Kit	
4-Man, SRU-A/P99S-1	11-22, F11-10
12-Man, SRU-A/P99S-2	11-48, F11-17
Search and Rescue Kit	10-23, F10-1, F10-10, F10-11, F10-12, F10-13, F10-14, F10-15
TRI-SAR Harness Assembly	14-422, F14-51
Rubber Tubing	11-229, F11-41
S	
Safety Belt, Crewmember's (MS16070-2,-3, -21)	8-1, T8-1
SAR Helicopter Aircrew Breathing Device Holster	14-450, F14-56
SAR Medical Kit, Level A/B/C	14-398, F14-49
SAR Signaling Sleeve	14-519
SAR Swimmer's Fins	14-500, F14-61
SAR Swimmer's Mask	14-477, F14-59
SAR Swimmer's Snorkel	14-490, F14-60
SAR Swimmer's Wetsuit Ensemble	14-464, F14-57
Search and Rescue Equipment	14-1, T14-1
Search and Rescue Kit	10-1, F10-1
Self-Inflating Ground Insulator	11-130, F11-30
Service/Shelf Life	
Aircrew Swimmer's Harness (HBU-23/P)	14-436
H-53 Ramp Gunner's Extension Belt	8-26
Relief Systems	9-393
Safety Belt, Crewmember's (MS16070-2,-3, -21)	8-24
TRI-SAR Harness	14-419
Sharpening	
Hook and Snap Blade Knife Type MC-1	9-212
Hook Blade Knife	9-190
Pocket Knife	9-180
Survival Knife and Sheath	9-224
Shelter, Lightweight Extreme Weather	11-104, F11-28
Shipping Containers, MK-124 MOD 0 Marine Smoke and Illumination Signal	9-326
Signaling Whistles	
Signaling Whistle (MIL-W-1053)	9-332, F9-39
Signaling Whistle, Classic Fox 40	9-341, F9-40
Sizing	
SAR Swimmer's Wetsuit	14-468, T14-12, T14-13
Sling Assembly, Hoisting	14-58, F14-8
Spring Loaded Belay Plate	14-276, F14-38

ALPHABETICAL INDEX (Cont)

Subject	Paragraph, Figure, Table Number
S (Cont)	
Stowage	
Cold Weather Survival Kit	
4-Man, SRU-A/P99S-1	11-27
12-Man, SRU-A/P99S-2	11-53
Lights	
Distress Marker Light, SDU-5/E	12-30
Distress Marker Light, SDU-39/N	12-30
Dynamic Ropes (Kernmantle)	14-296
Passenger Helicopter Aircrew Breathing Device Holster	9-439
Pistol Holster, Leather (Optional Equipment)	9-412
Rappelling Ropes	14-255
Survival Kits	
Theater Specific (Hot and Cold Weather)	9-460
Strike Force Striker	11-66, F11-24
Supplementary Publications	1-21
Support Equipment	
Helicopter Aircrew Breathing Device (HABD, SRU-40/P, SRU-40A/P, SRU-40B/P)	16-10
Survival Kits	
Theater Specific (Hot and Cold Weather)	9-450
Survival Saw	11-84, F11-26
Survivor Locator Light (LPP-1/1A Life Preserver)	12-33, F12-4
Sven Folding Saw	14-368, F14-46
T	
Technical Directives and Forms	1-15
Telescoping Shovel	11-202, F11-38
Test	
Batteries	
AA	12-27
BA-1574/U	12-26
BA-5374/U	12-27
L91	12-27
LLB-1	12-27
Distress Marker Light, SDU-5/E	12-25
Function Test	
Pneumatic Rescue Hand Tool	14-87
Leak Test	
HABD Leak Test (SRU-40/P, SRU-40A/P, SRU-40B/P)	16-49
HABD Immersion Test (SRU-40/P, SRU-40A/P, SRU-40B/P)	16-52, F16-7, F16-8, T16-4, T16-5
ON/OFF Valve Leak Test (HABD, SRU-40/P, SRU-40A/P, SRU-40B/P)	16-51
Pneumatic Rescue Hand Tool	14-88
Static Leak Test (HABD, SRU-40/P, SRU-40A/P, SRU-40B/P)	16-50
Performance Test	
Pneumatic Rescue Hand Tool	14-90
Load Test	
Hoisting Sling Assembly	14-68
MEDEVAC Litter	14-189

ALPHABETICAL INDEX (Cont)

Subject	Paragraph, Figure, Table Number
T (Cont)	
Test (Cont)	
Load Test (Cont)	
MEDEVAC Litter (Vertical Sling)	14-191
Rescue Strop	14-141
Tension (Push/Pull) Test	
Rescue Seat (LSC P/N 420)	14-226
Testing Distress Marker Light SDU-5/E	12-27
Trigger Force Test	
Pneumatic Rescue Hand Tool	14-89
Thermal Protective Aid	11-148, F11-32
Trail Line Assembly	14-163, F14-23
TRI-SAR Harness Assembly	14-410, F14-50, T14-11
Troubleshooting	
Helicopter Aircrew Breathing Device (HABD, SRU-40/P, SRU-40A/P, SRU-40B/P)	F16-7, F16-8, T16-4, T16-5
U	
Ultima Thule Sleeping Bag	11-121, F11-29
Updating the Manual	1-12
V	
V-Bladed Rescue Knife	14-347, F14-44
Vest, Hoisting (Full Body Fishnet)	14-307, F14-40
W	
Water Bottle (Canteen)	9-42, F9-7
Water Desalter Kit	9-57, F9-10
Water Storage Bag	9-1, F9-1
Wool Blanket	9-28, F9-5, 14-102, F14-12
X	
Y	
Z	

THIS PAGE INTENTIONALLY LEFT BLANK.